SIEMENS

SIVACON S4

Manual

2/2007

8PQ9800-0BA02

Safety Guidelines

This manual contains notices you have to observe in order to ensure your personal safety, as well as to prevent damage to property. The notices referring to your personal safety are highlighted in the manual by a safety alert symbol, notices referring only to property damage have no safety alert symbol. These notices shown below are graded according to the degree of danger.

Danger

indicates that death or severe personal injury **will** result if proper precautions are not taken.

Warning

indicates that death or severe personal injury **may** result if proper precautions are not taken.

Caution

with a safety alert symbol, indicates that minor personal injury can result if proper precautions are not taken.

Caution

without a safety alert symbol, indicates that property damage can result if proper precautions are not taken.

Notice

indicates that an unintended result or situation can occur if the corresponding information is not taken into account.

If more than one degree of danger is present, the warning notice representing the highest degree of danger will be used. A notice warning of injury to persons with a safety alert symbol may also include a warning relating to property damage.

Qualified Personnel

The device/system may only be set up and used in conjunction with this documentation. Commissioning and operation of a device/system may only be performed by **qualified personnel**. Within the context of the safety notes in this documentation qualified persons are defined as persons who are authorized to commission, ground and label devices, systems and circuits in accordance with established safety practices and standards.

Prescribed Usage

Note the following:

Warning

This device may only be used for the applications described in the catalog or the technical description and only in connection with devices or components from other manufacturers which have been approved or recommended by Siemens. Correct, reliable operation of the product requires proper transport, storage, positioning and assembly as well as careful operation and maintenance.

Trademarks

All names identified by ® are registered trademarks of the Siemens AG. The remaining trademarks in this publication may be trademarks whose use by third parties for their own purposes could violate the rights of the owner.

Disclaimer of Liability

We have reviewed the contents of this publication to ensure consistency with the hardware and software described. Since variance cannot be precluded entirely, we cannot guarantee full consistency. However, the information in this publication is reviewed regularly and any necessary corrections are included in subsequent editions.

Siemens AG
Automation and Drives
Postfach 48 48
90437 NÜRNBERG
GERMANY

Order No.: 8PQ9800-0BA02
Ⓟ 03/2007

Table of contents

Introduction 1

1.1 Important notes

Purpose of this manual

This manual is intended for reference purposes. The information contained in this manual will enable you to set up the SIVACON S4 system.

Readership

This manual is aimed at people who possess the expertise required to set up low-voltage switchgear and controlgear assemblies.

Validity

This manual is valid for the SIVACON S4 low-voltage power-distribution system.

Standards and certifications

The SIVACON S4 low-voltage power-distribution board conforms to:

- IEC 60439-1
- EN 60439-1

Disclaimer

The products described here were developed to perform safety-oriented functions as part of an overall installation or machine. A complete safety-oriented system generally features sensors, evaluation units, signaling units, and reliable shutdown concepts. It is the responsibility of the manufacturer to ensure that a system or machine is functioning properly as a whole. Siemens AG, its regional offices, and associated companies (hereinafter referred to as "Siemens") cannot guarantee all the properties of an entire plant, system or machine that has not been designed by Siemens.

Nor can Siemens assume liability for recommendations that appear or are implied in the following description. No new guarantee, warranty, or liability claims beyond the scope of the Siemens general terms of supply are to be derived or inferred from the following description.

System Description 2

2.1 SIVACON S4

SIVACON S4 is a type-tested low-voltage switchgear and controlgear assembly (TTA) conforming to IEC 60439-1, EN 60439-1, which is used in the infrastructural power supply in administrative and utility buildings, in industrial and commercial buildings, as well as in public buildings, such as schools and hospitals.

Figure 2-1 Front view of the SIVACON S4

The SIVACON S4 low-voltage power-distribution board concept is very safe and reliable. SIVACON S4 features a modular design principle. Using standardized, mass-produced assemblies, reflecting the building's requirements, and thanks to the great opportunity to combine SIVACON S4 module technology, every possible need can be met to optimum effect in the area of low-voltage power distribution.

2.2 Delivery form

SIVACON S4 assembly kits contain the individual and standardized parts which are required to enable it to function, as well as the assembly drawings which are required for self-assembly. The assembly kits are delivered in packaging which is optimized for space-efficiency. The assembly kits are delivered from a warehouse.

Figure 2-2 Warehouse for SIVACON S4 assembly kits

2.3 Environmental aspect

To the best of our knowledge, our products do not contain any substances in concentrations or applications whose marketing in products is prohibited by the current requirements of Directive 2002/95/EC (RoHS). The materials used are recyclable.

2.4 Transport and storage

The assembly kits must be transported and stored at a relative humidity of 50 % and at a temperature of 40°C. Higher relative humidity levels are permissible at lower temperatures, e.g. 90 % at 20°C. Furthermore, a temperature of between -25°C and +55°C is permissible, as are temperatures of up to +70°C for short spells of up to 24 hrs.

2.5 Plant concept

2.5.1 Rack

The basic module is the framework rack, comprising height, width and depth rails. It is the supporting structure for all modules which are inserted or mounted on. By using sendzimir-galvanized rack sections and thread-forming screws, a structure is achieved with high mechanical stability, and the installed modules are safely earthed.

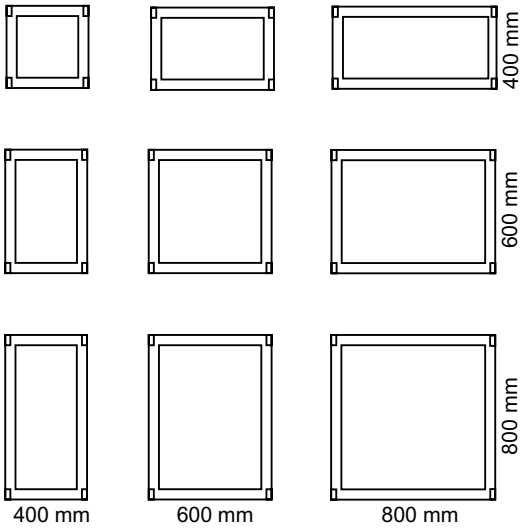

Figure 2-3 Rack variants (top view)

Racks can be arranged in rows of any width.

The structural design of the rack supports any combination of frames depth-wise and, thus, a configuration of any plant depth is achievable.

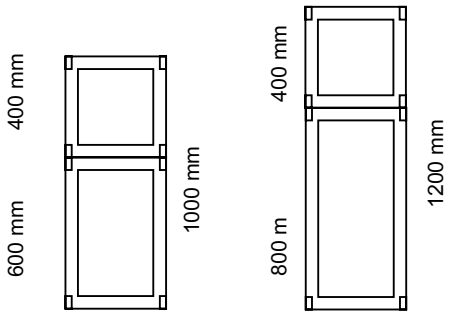

Figure 2-4 Possible rack combinations (top view)

2.5.2 Supporting structure

In the case of racks of different depths, the supporting structure ensures identical installation compartments for assembly kits for devices and busbar systems and divides racks into function compartments such as the device installation compartment, main or distribution bus compartments, as well as cable-terminal compartments.

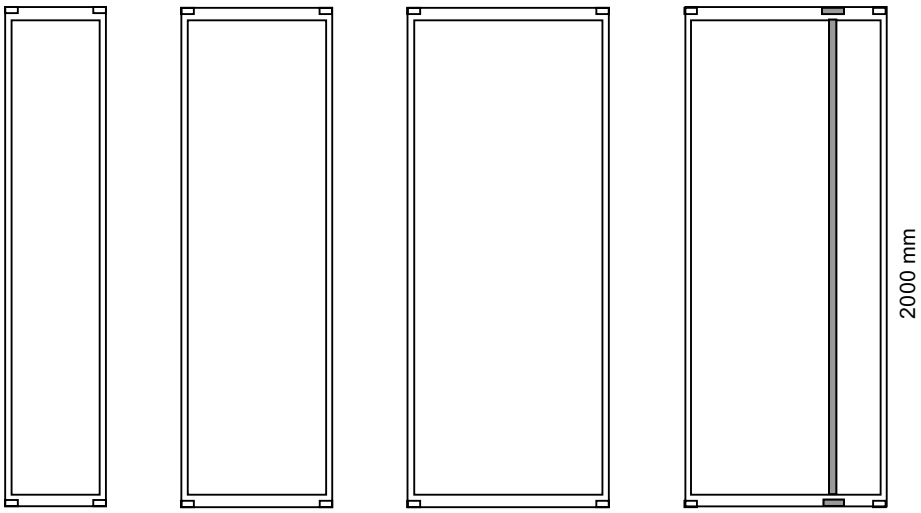

Figure 2-5 Front view of racks with a supporting structure

Each rack requires a supporting structure.

An additional supporting structure is required for racks measuring 800 mm in width in which the function compartment is split into compartments of 600 mm and 200 mm. The function compartment can be split into compartments of 600 mm and 200 mm either to the left or to the right.

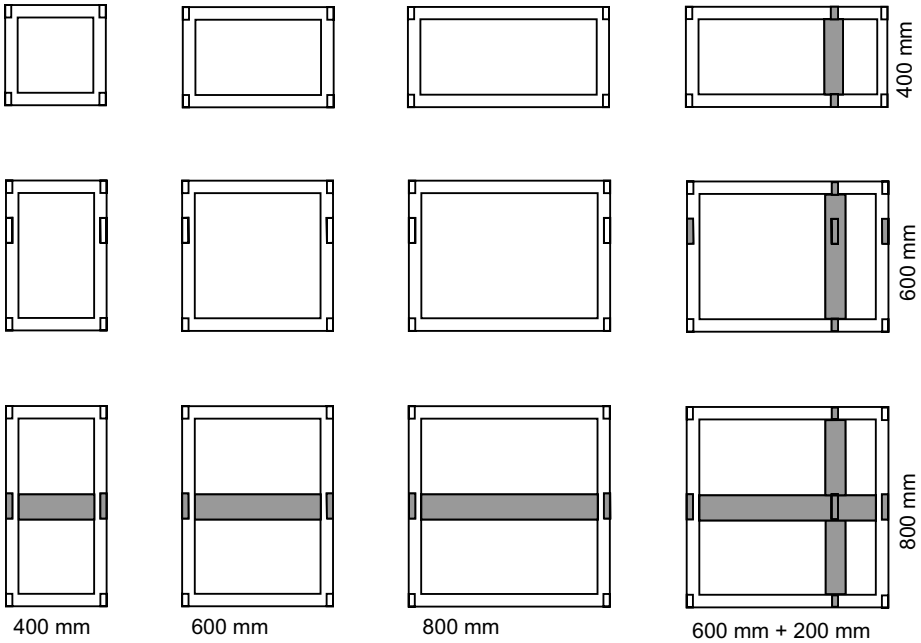

Figure 2-6 Top view of racks with a supporting structure

There are different supporting structures available for SIVACON S4 for different main busbar configurations.

The supporting structure with a standard main busbar configuration serves to divide the function compartments clearly. The position of the main busbar is precisely defined and guarantees a clearance of 20 mm.

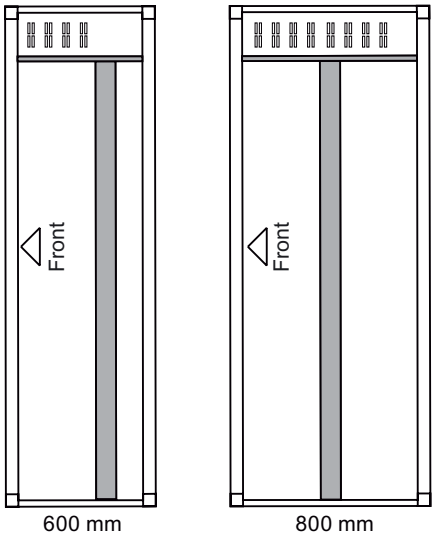

Figure 2-7 Side view of the supporting structure with a standard main busbar configuration

The supporting structure without main busbars or for free main busbar configuration offers the maximum space for installing switchgear and protective equipment. The main busbar systems can be arranged flexibly according to requirements. The position of the main busbar guarantees a clearance of 16 mm.

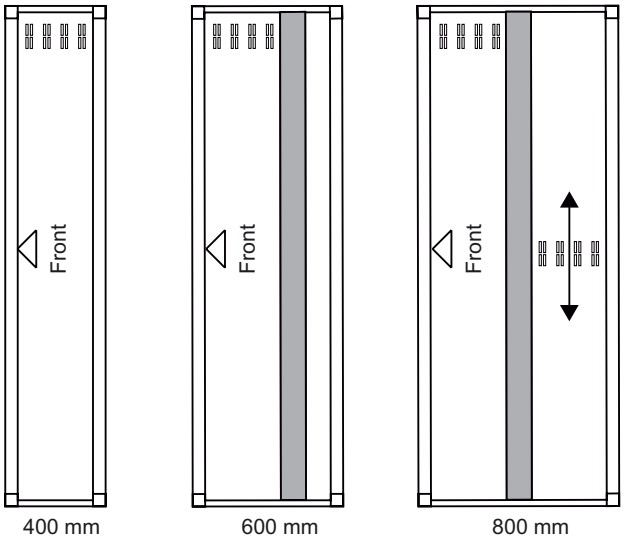

Figure 2-8 Side view of the supporting structure without or with a free main busbar configuration

2.5.3 Function compartments

The use of supporting structures serves to create separate function compartments such as a device installation compartment, main or distribution busbar compartments, as well as cable-terminal compartments.

In configuring the vertical busbar systems, importance has been attached to easy access to the ports on the devices during installation and maintenance. The distribution busbar compartment and device-installation compartment are arranged with a view towards minimizing the lengths of short-circuit-proof cables and busbars for connecting equipment.

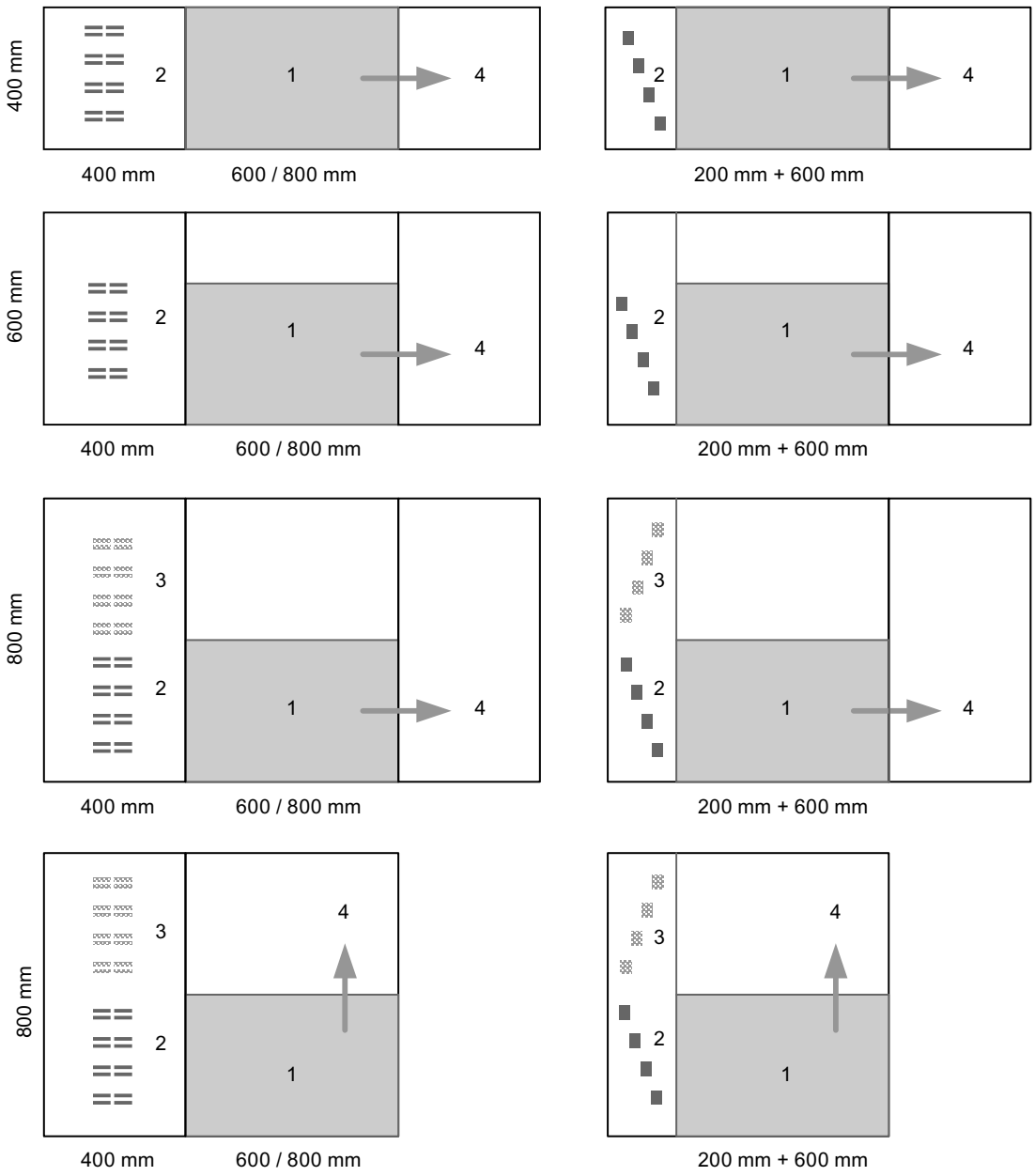

Figure 2-9 Function compartments (top view)

1 Device-installation compartment
2 Compartment for vertical distribution busbars at the front (standard position)
3 Compartment for vertical distribution busbars at the rear
4 Cable-terminal compartment

2.5.4 Form of interior subdivision

For the purposes of achieving interior subdivision, the SIVACON S4 is a flexible, modular system, comprising a few assembly kits.

The system for creating interior subdivision comprises the following assembly kits:

- Subdivision for busbar systems
- Subdivision for branches
- Add-on blocks

Form of interior subdivision 2b

- Subdivision for the main busbar system
- Subdivision for vertical distribution busbars and/or panel partitions

Form of interior subdivision 4a

- An assembly kit comprises horizontal subdivision, vertical subdivisions from the rear and side cable-terminal compartments.

Form of interior subdivision 3b

- Connecting-terminal assembly kit added to subdivision 4a

Form of interior subdivision 4b

- Bellows assembly kit added to subdivision 3b

2.5.5 Enclosure

SIVACON S4 is a low-voltage power-distribution board which is enclosed on all sides and is encased in sheet steel. The enclosure parts enable it to be designed to the degrees of protection IP30/31, IP40/41 or IP55. The powder-coated enclosure parts are designed in RAL 7035.

The door hinges form a safe earth connection to the rack parts. The function has been verified through type testing. When doors are installed for devices, they only have to be earthed via the existing welding bolts.

The shape of the quick-release lock and trim hinge ensures that the trims are earthed. The function has been verified through type testing.

2.6 Technical specifications

Technical specifications

Standards and regulations	Type-tested low-voltage switchgear and controlgear assembly (TTA)	IEC 60439-1, EN 60439-1
Clearances and creepages	Rated impulse voltage (Uimp) Overvoltage category Degree of contamination	12 kV IV III
Rated insulation voltage (Ui)		1000 V
Rated operational voltage (Ue)		up to 690 V
Busbars 3-pin / 4-pin	Main busbar system Rated currents (In) Rated peak withstand current (Ipk) Rated short-time withstand current (Icw)	 up to 4000 A up to 220 kA up to 100 kA, 1s
Degree of protection	to IEC 60529, EN 60529	up to IP55
Protection against mechanical damage	to IEC 62262, para. 9.6 IP3X ≧ IP4X	 IK08 IK10
Form of interior subdivision	to IEC 60439-1, EN 60439-1, para. 7.7	up to form 4
Maximum weight of the supporting structure	Verified through type testing with a static load and by raising in accordance with IEC 62208, paras. 9.3, 9.4	Max. 1200 kg

Technical data for the SIVACON S4

Construction requirements

3

3.1 Busbar systems

The SIVACON S4 main busbar system offers a practical way of cascading rated currents, harmonized with the rated currents of standard transformers.

The basis for this is the universal busbar support for using rectangular copper sections.

Distribution and connecting busbars can be assembled without creating holes by using two, four or eight sub-conductors per phase.

Arrangement with two sub-conductors per phase

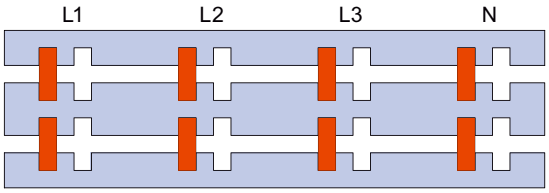

Arrangement with four sub-conductors per phase

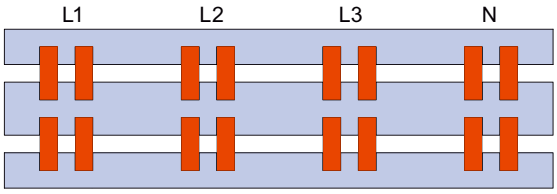

Arrangement with eight sub-conductors per phase

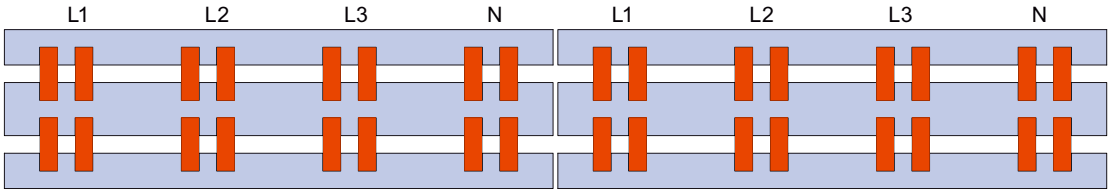

Figure 3-1 Busbar systems

Warning

The function of the main busbar system has been verified through type testing. Any alternative arrangement of sub-conductors is not permissible.

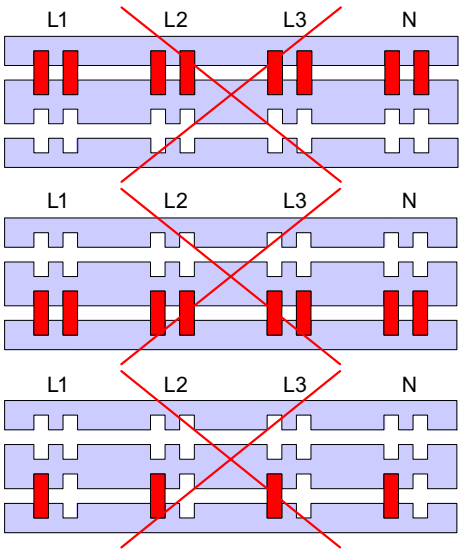

Figure 3-2 Incorrect arrangement of conductors in busbar systems

3.1.1 Short-circuit resistance of busbars

The dimensions of busbar systems must be designed to support correct operation and for errors. With regard to short-circuit resistance, errors are considered outside the low-voltage switchgear and controlgear assembly.

If there is a short circuit within the low-voltage switchgear and controlgear assembly, an accidental arc occurs. The only exception is if a short-circuit and earthing device is inserted which can be treated like a short circuit occurring outside the plant.

Busbar systems which are not protected by a current-limiting short-circuit protective device, the dimensions of the busbar system must reflect the rated short-time current ICW (1s).

Busbar systems and conductors, which are designed in accordance with IEC 60439-1, 7.5.5.3 and protected by a current-limiting short-circuit protective device, may be rated for the short-circuit stress which is reduced by the inclusion of this device (details of the rated conditional short-time current Icc).

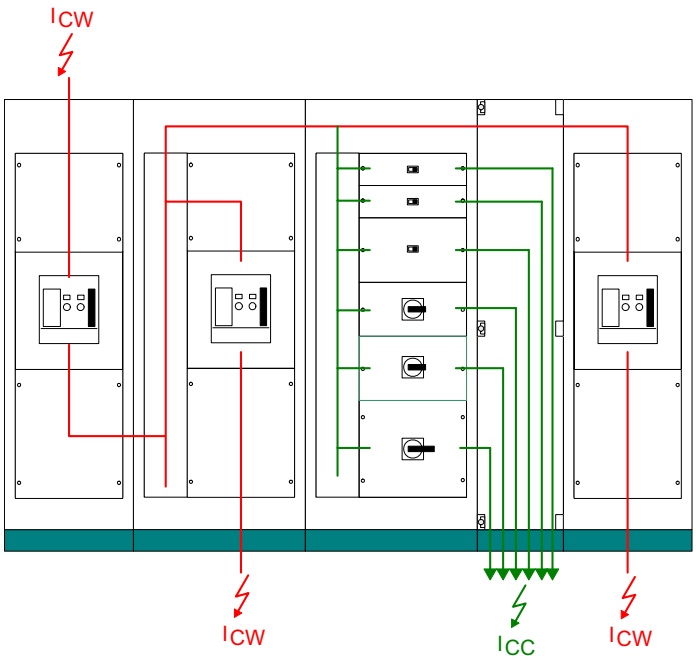

Figure 3-3 Short-circuit resistance of busbars

Main busbar system

The rated peak withstand current of the main busbar system is specified by the number of subconductors, the cross-section and the number of bracing elements per panel.

It is important that the bracing element(s) is/are positioned correctly in order to ensure the requisite properties.

The number of bracing elements is determined in accordance with the selection tables in the catalog.

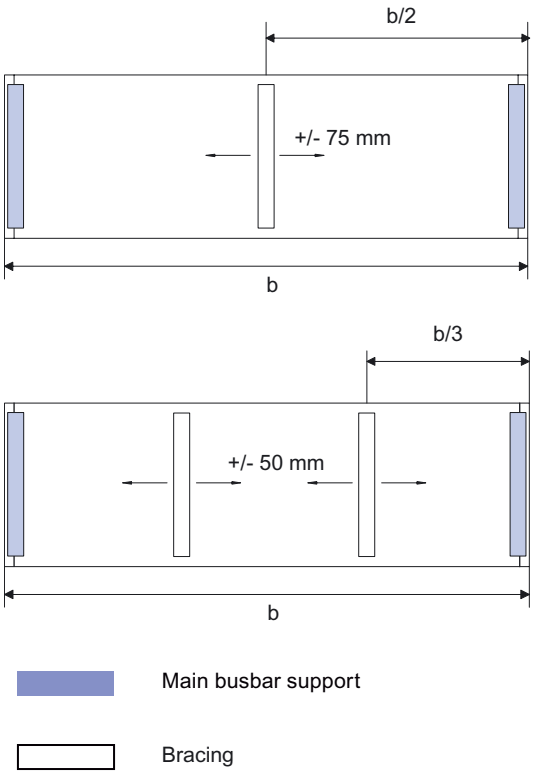

Figure 3-4 Main busbar system, Support, Bracing elements

Vertical distribution busbars, cascaded

The rated peak withstand current of the vertical distribution busbar system (cascaded) is specified by the number of subconductors, the cross-section, the busbar section and the number of supports.

It is important that the supports are positioned correctly in order to ensure the requisite properties.

The number of holders is determined in accordance with the selection tables in the catalog.

Icw	≤ 50 kA	≤ 65 kA	≤ 85 kA
Number of supports	4	5	8
H	Max. 500	Max. 375	Max. 215

Support spacing for vertical distribution busbars, cascaded

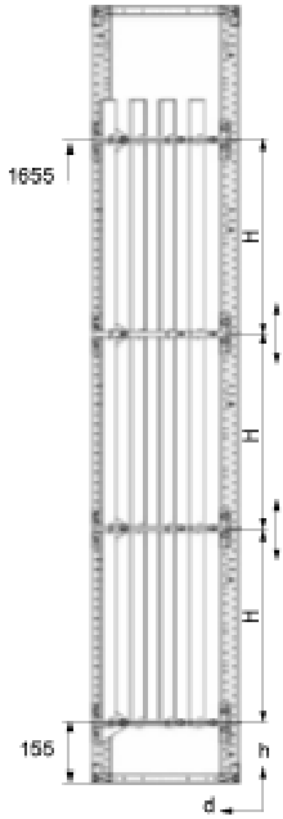

Figure 3-5 Vertical distribution busbars, cascaded

Vertical distribution busbars, non-cascaded

The rated peak withstand current of the vertical distribution busbar system (non-cascaded) is specified by the number of subconductors, the cross-section and the number of supports and bracing elements.

It is important that the supports and bracing elements are positioned correctly in order to ensure the requisite properties.

The number of bracing elements is determined in accordance with the selection tables in the catalog.

H ≥ 800 mm

K = ½ H ± 75 mm

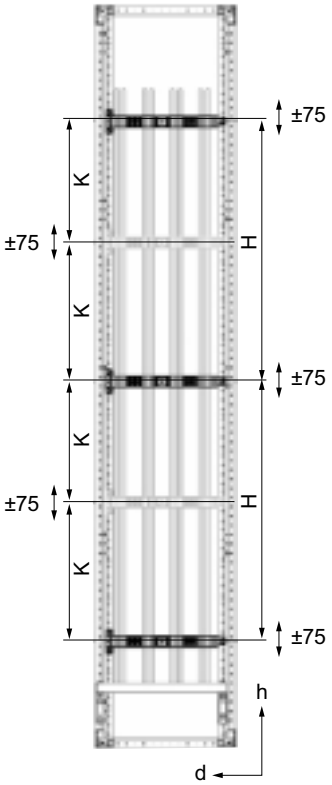

Figure 3-6 Vertical distribution busbars, non-cascaded

Warning

It is important that there are enough supports and bracing elements and that they are positioned correctly in order to ensure that the dimensions of the busbar systems are designed correctly.

3.1.2 Protective-conductor circuit

Permissible processes

In accordance with IEC 60439-1, the following processes are permissible in order to design the dimensions of the protective-conductor circuit:

1. Designing the cross-section in accordance with IEC 60439-1, Subsection 7.4.3.1.7, Table 3
2. Calculating the cross-section in accordance with IEC 60439-1, Annex B
3. Verification by type-testing

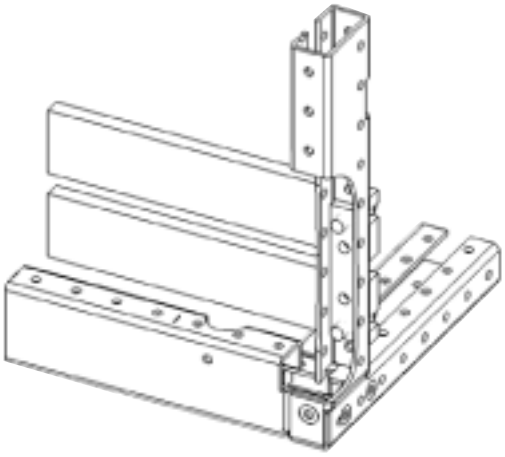

Figure 3-7 Rack connection for PE bars

Designing the PE cross-section in accordance with 1. and 2. only takes due account of the dimensions of the PE cross-section.

The critical aspect is the leakage into the outer rack rails of the first and last panel. The safe leakage of the fault current can only be verified through type-testing.

Notice

There are assembly kits available in the catalog for securing the PE bars in place in SIVACON S4 systems. The function of these assembly kits has been verified through type testing.

3.1.3 PEN-conductor bridge for the main busbar system

There is a type-tested PEN-conductor bridge available in order to create a TN-C system.

This bridge connects the N-conductor to the rack and has to be assembled **once per panel and main busbar system**. This turns the N-conductor into the PEN-conductor.

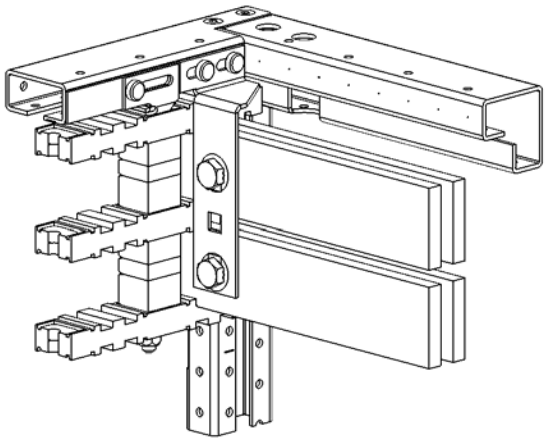

Figure 3-8 PEN-bridge for the main busbar system

Notice

There are assembly kits available in the catalog for securing the PEN-conductor bridge in place in SIVACON S4 systems. The function of these assembly kits has been verified through type testing.

3.1.4 Connections for main busbars

The following variants exist for connecting the main busbars:

2 sub-conductors per phase 2 x 20 mm x 10 mm 2 x 30 mm x 10 mm	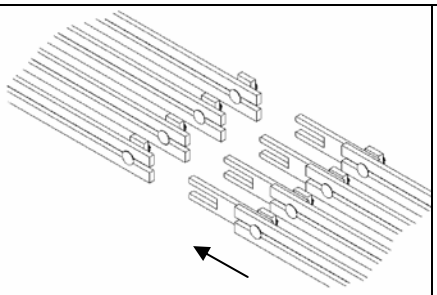	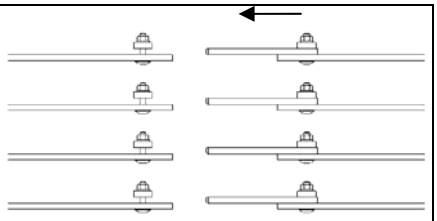
4 sub-conductors per phase 4 x 20 mm x 10 mm 4 x 30 mm x 10 mm	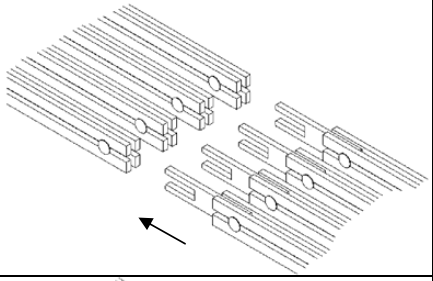	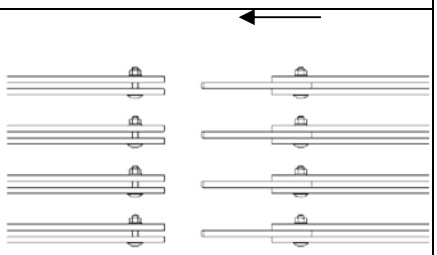
4 sub-conductors per phase 4 x 40 mm x 10 mm 4 x 50 mm x 10 mm	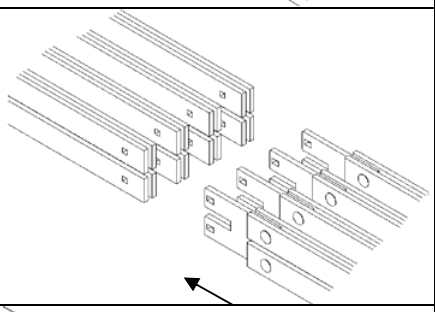	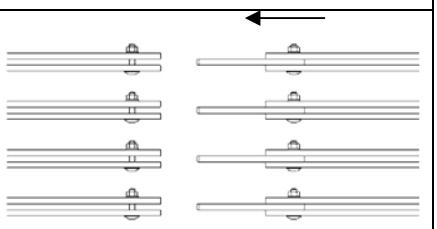
Connections for PE bars	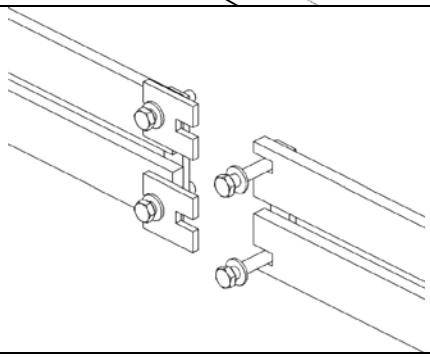	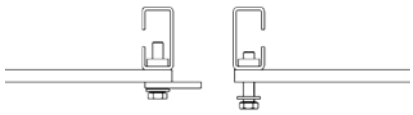

Connections for main busbar systems

Notice

There are assembly kits available in the catalog for connection lugs in SIVACON S4 systems. The function of these assembly kits has been verified through type testing.

If the connection lugs which are on offer in the catalog are used for the main busbar system, the ends of the bars must be perforated as shown in the table below for bar cross-sections of 40 mm x 10 mm and 50 mm x 10 mm. No perforation is required for bar cross-sections of 20 mm x 10 mm and 30 mm x 10 mm.

	Left side of the panel	Right side of the panel
Sub-conductor 40 mm x 10 mm	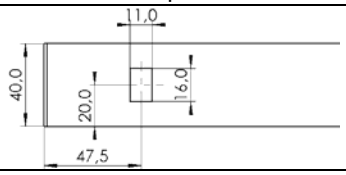	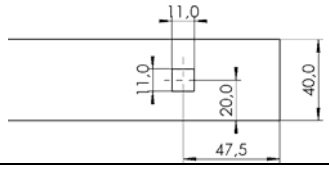
Sub-conductor 50 mm x 10 mm	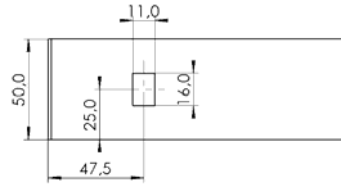	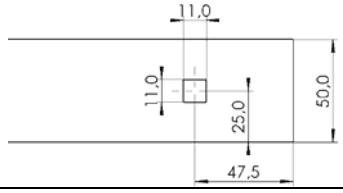

Perforation of the main busbar system

If the connection lugs which are on offer in the catalog are used for the PE bar, the ends of the bars must be perforated as shown in the table below.

Sub-conductor 2 x 20 mm x 5 mm	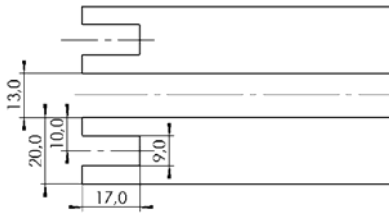
Sub-conductor 2 x 30 mm x 5 mm 2 x 30 mm x 10 mm	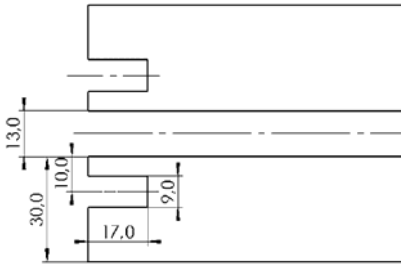
Sub-conductor 2 x 40 mm x 5 mm	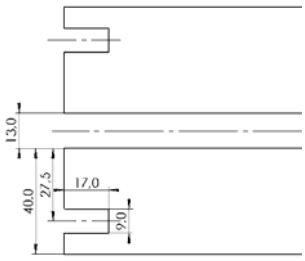

Perforation of PE bars

3.1.5 Connection to main and vertical distribution busbars, non-cascaded

The main and vertical distribution busbars are connected as follows:

Connection to a busbar system with 2 sub-conductors per phase	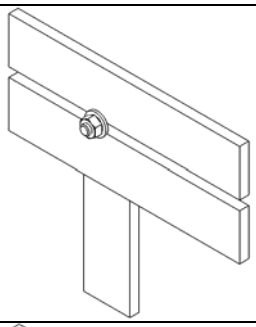	
	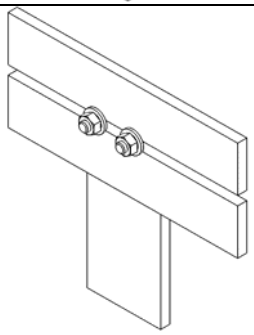	
Connection to a busbar system with 4 sub-conductors per phase	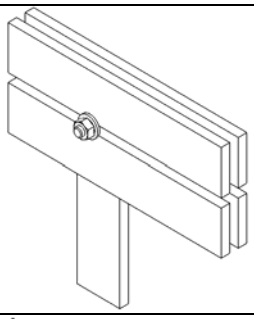	
	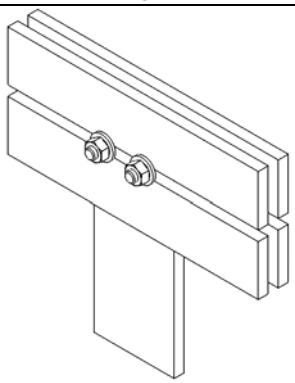	

Connection of distribution busbars to the main busbar system

Notice

There are assembly kits available in the catalog for connection lugs in SIVACON S4 systems. The function of these assembly kits has been verified through type testing.

3.1.6 Connection to vertical distribution busbars, cascaded

Vertical distribution busbars cascaded with a rectangular section, connected with busbar brackets	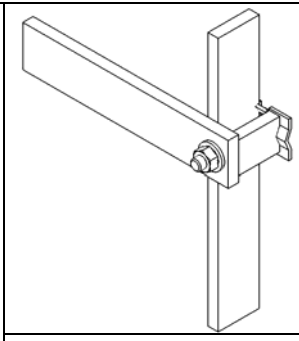	
	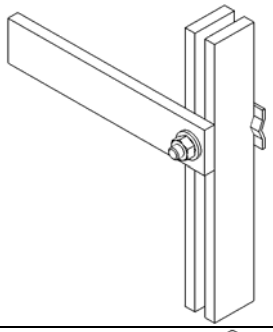	
Vertical distribution busbars cascaded with a DIN mounting rail, connected with a T-head bolt	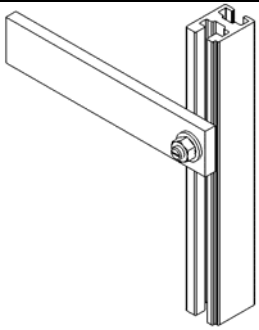	

Connection to vertical distribution busbars

Notice

There are assembly kits available in the catalog for standard parts in SIVACON S4 systems. The function of these assembly kits has been verified through type testing.

3.1.7 N/PEN, PE in the cable-terminal compartment

The N/PEN busbar is mounted in the cable-terminal compartment on the N/PEN support which is available in the catalog. Use the connecting terminal 8PQ5000-0BA05 to feed the N-rail through in a form of inner subdivision ≧2b.

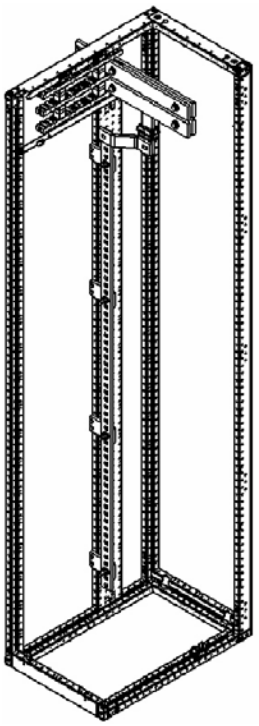

Figure 3-9 N/PEN-busbar in the cable-terminal compartment

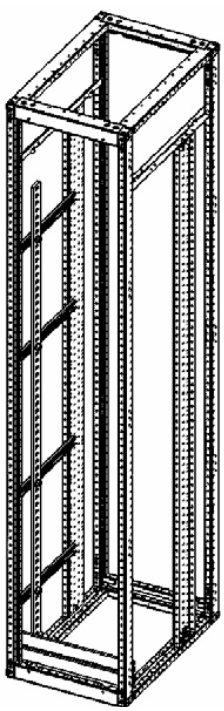

The PE busbar is mounted directly onto the cable brackets.

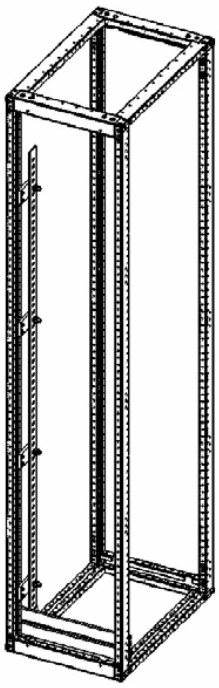

The PE busbar is mounted depth-wise on an N/PEN, PE support in the cable-terminal compartment

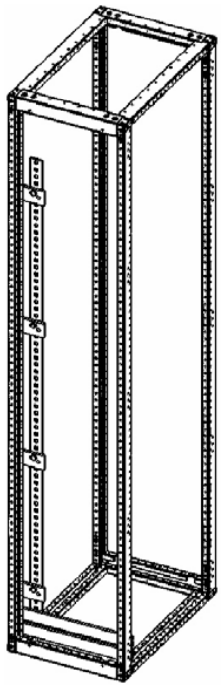

The PE busbar is mounted width-wise on an N/PEN, PE support in the cable-terminal compartment

PE busbar in the cable-terminal compartment

3.2 Installation of switchgear and protective equipment

Accessibility of devices and external connections

Conditions are set in accordance with IEC 60439-1, 7.6.2.1 for arranging operating elements, devices and connections for external cables and leads.

Height above the surface on which operators stand	
2000 mm	**Maximum height** for instruments which are read on the outside and for connections of external cables and leads
800- 1600 mm	**Permissible range** for locating the external emergency stop device
200 mm	**Minimum height** for connections of external cables and leads

Conditions for arrangement

The plant concept for the SIVACON S4, with a trim frame fitted at a height of 1600 mm, takes due account of the requirements of IEC 60439-1 in respect of the minimum and maximum heights for the connection of external cables and leads.

3.3 Device installation and safety distances

Attention must be paid to the operating instructions for the installed devices with regard to all setting up and connection procedures. If necessary, specific additional blocks must be ordered for the devices, and they must be installed in accordance with the details in the operating instructions.

During a short-circuit interruption, high temperatures, ionized gases and high pressures occur in and above the arcing chambers of the circuit-breaker.

This gives rise to safety distances for:

- enabling pressure to be reduced without leading to any damage,
- avoiding fire or damage as a result of the escape of hot, ionized gases,
- preventing a short circuit to earthed areas,
- avoiding flashovers and arcs between conductive parts of different potential as a result of the escape of ionized gases.

SIVACON S4 assembly kits guarantee the requisite safety distances for switchgear and protective equipment from Siemens. Auxiliary equipment may not be installed or control lines laid within those safety distances.

If you wish to use a type-tested version, opt for the connecting busbars which are available in the catalog for Siemens switchgear and protective equipment.

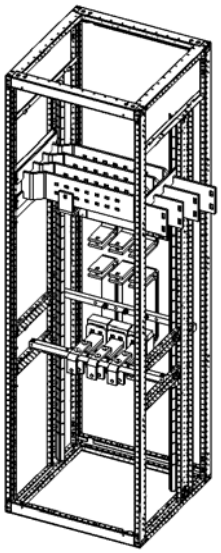

Connection for an open Sentron 3WL circuit-breaker

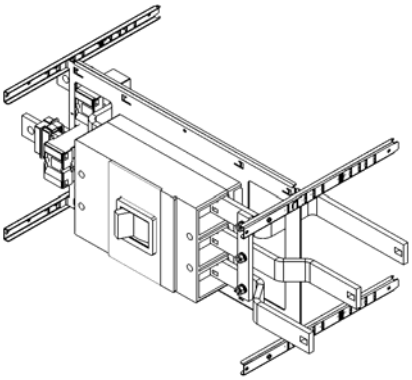

Connection for a Sentron 3VL compact circuit-breaker

Notice

There are assembly kits available in the catalog for SIVACON S4 systems. The function of these assembly kits has been verified through type testing.

3.4 Terminal strips, cable brackets

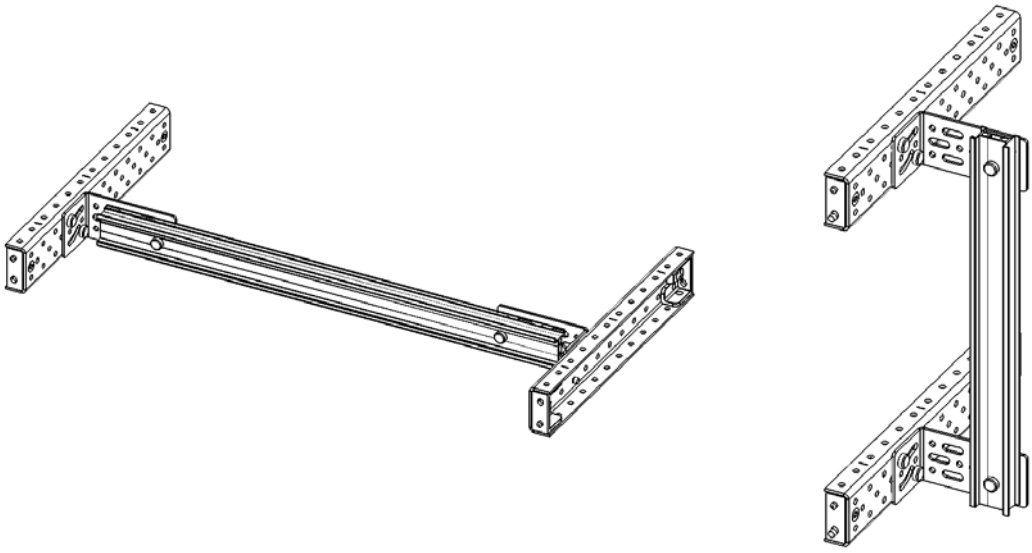

Figure 3-10 Terminal strips

Combinations of cross-rails, universal brackets 8PQ9400-0BA01 and aluminium multi-profiles rails 8PQ9600-0BA01. The incline of the aluminium multi-profile section rail can be changed by using the universal bracket.

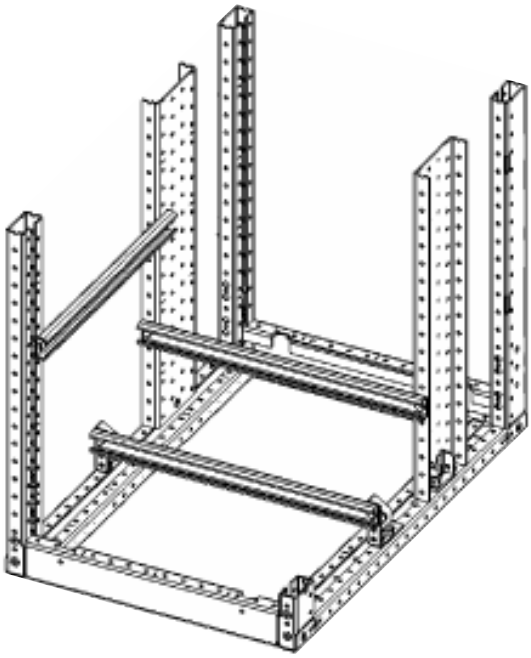

Cable brackets

Cable brackets can be screwed directly to the rack profile section. Cable brackets 8PQ3000-0BA73 can be arranged at any depth without hindering the installation of base plates.

3.5 Feeding through busbars and cables

The enclosures and subdivisions used are made from sheet steel. When individual conductors and busbars are fed through, the magnetic reversal and eddy currents cause the sheet steel to heat up sharply to temperatures about the limits for the adjacent materials.

Applications include introducing external cables as individual conductors or device connections to busbars and cable connections in the form of the inner subdivision ≧2b.

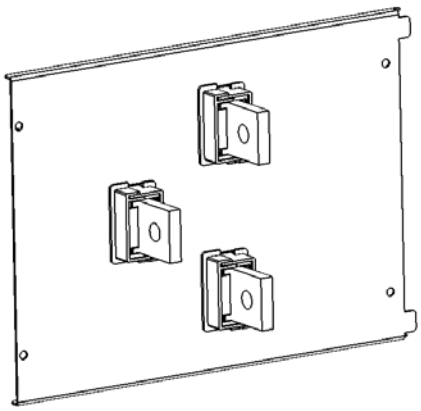

Cable gland

The cable glands used in the SIVACON S4 by means of connecting terminals up to 630 A are type-tested.

Caution

If individual conductors are introduced for currents over 630 A, the following measures are required:

- Interrupting the metallic connection between the individual conductors
- All individual conductors must be introduced through a cut-out, which must then be covered
- High-grade sheet steel must be used

3.6 Operating Instructions

In accordance with IEC 60439-1, the manufacturer is required to supply documentation about the transport, setup, operation and maintenance of the switchgear and controlgear assemblies. These documents form part of the plant documentation.

The following operating instructions are available for SIVACON S4:

- Transportation and storage of switchgear
- Installation and base mounting
- Electrical and mechanical panel group
- Electrical connections (external)
- Operation and maintenance

Installation/Mounting 4

Each assembly kit comes with installation instructions. Read this information before commencing installation and follow the instructions outlined.

In the development of the plant, we have consciously avoided using different types of bolts, thus avoiding the need to change tools frequently. The screw connections are mainly established with thread-forming M6 bolts, torx-driven. The safe, pressure-free positive connection of the torx drive enables crewed connections to be tightened and loosened, even if the tool is applied at an angle. The screw connection work can be performed evenly and safely using power screwdrivers with a torque setting.

4.1 Installation preparations

Prepare for the installation using the SIMARIS Configuration Basic software.

Parts lists

Print the panel-related parts lists (releases, reports).
Sort the delivery blocks according to fields and the installation sequence.

Front views

Print the individual panel front view, draw in the heights at which the supports for the vertical distribution busbar system and branches are to be installed and affix the printout to the rack.

This printout will tell the fitter which branch to place in which position and where the supports for the vertical distribution busbar system, cable brackets etc. have to be installed.

This saves him having to calculate this during installation and avoids errors.

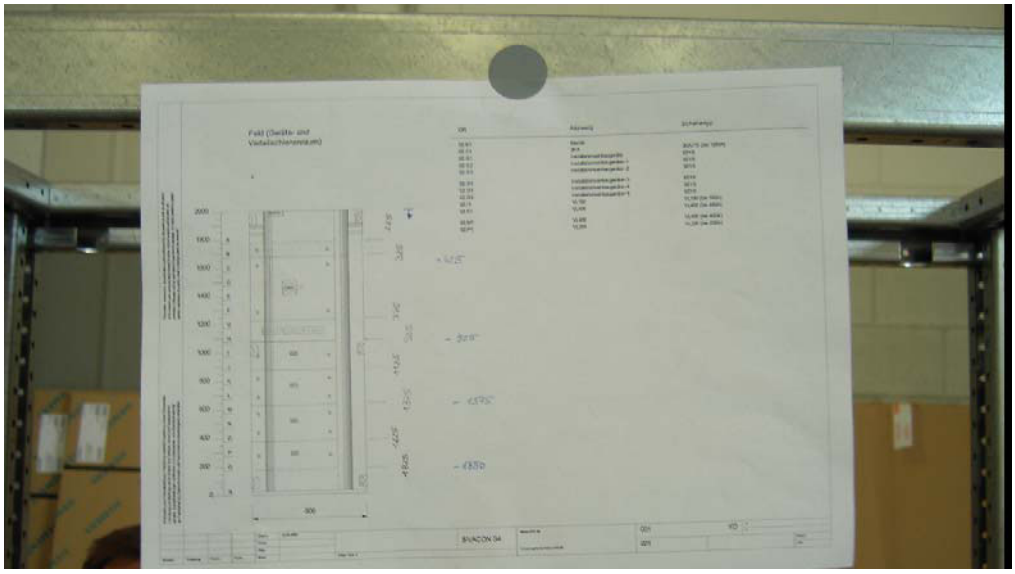

Figure 4-1 Front view for installation

Notice

Take note of the installation sequence. This way you will avoid installation mistakes and keep installation time to a minimum.

4.2 Installation of the base panel

Procedure for mounting the base panel:

Installation of the rack	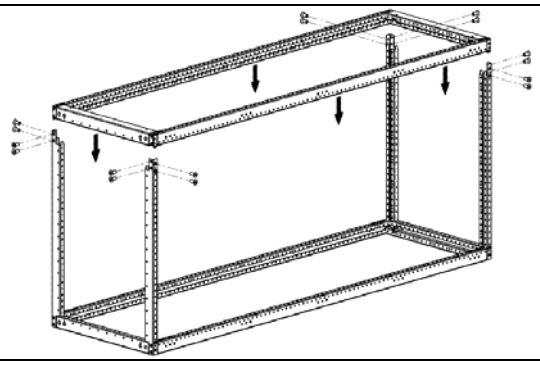
Installation of the base corners (optionally install the bracing elements)	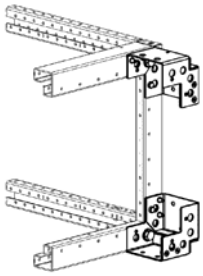
Installation of the lower part of the supporting structure with a function compartment split of 600 mm + 200 mm	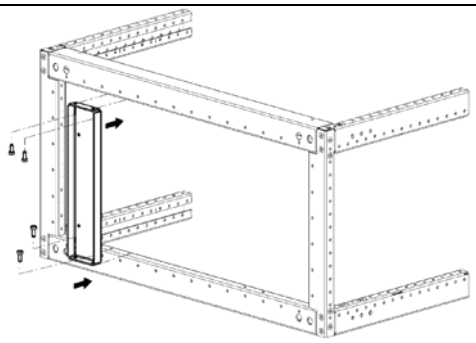
Installation of supporting structure without a function compartment split	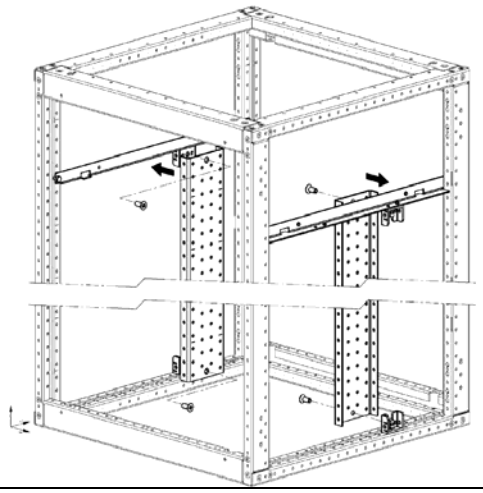

Installation of the rack connection for PE busbars	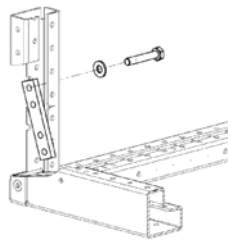
Installation of the supports for vertical distribution busbars (cascaded or non-cascaded), with due regard for spacing between supports and device connections Installation of the vertical distribution busbars	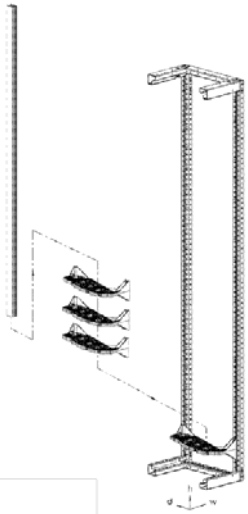
Installation of the supporting structure with a function compartment split of 600 mm + 200 mm	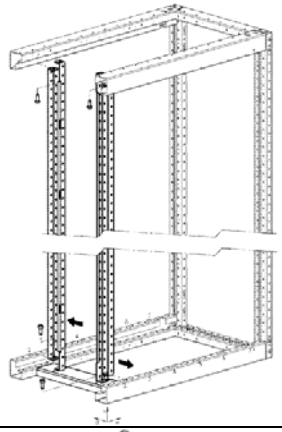
Installation of the base plate	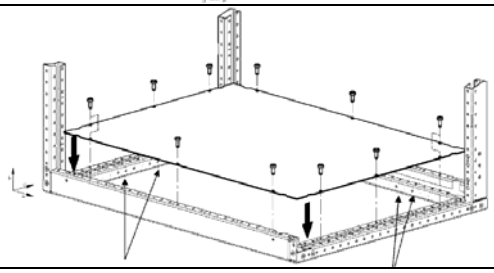

Installation of the supports for subdivision 2b for vertical distribution busbars with due regard for the arrangement of devices and minimum spacing Installation of vertical subdivision 2b	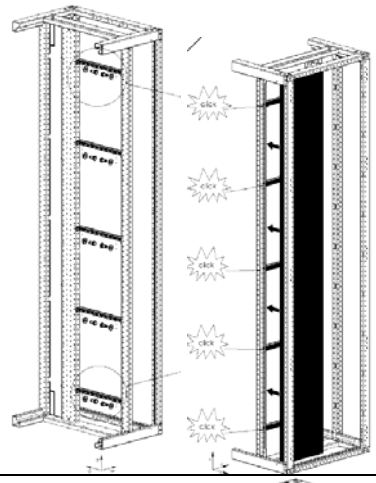
Installation of the lower part of horizontal subdivision 2b for main busbars	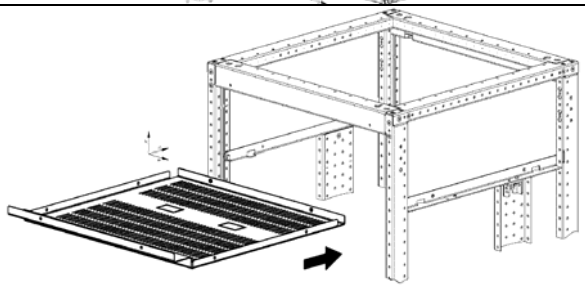
Installation of the supports for the main busbar system Installation of the copper bars and installation of the bracing elements with due regard for permissible spaces	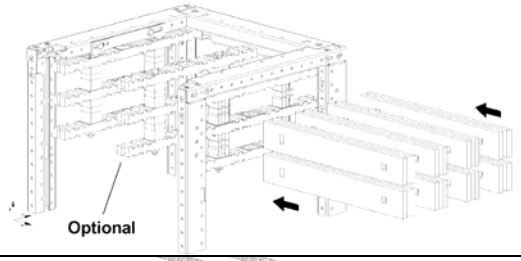
Installation of the connection lugs for the main busbars - Vertical distribution busbars	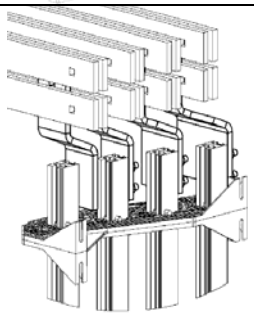
Installation of the connection lugs for the main busbars - Main busbars	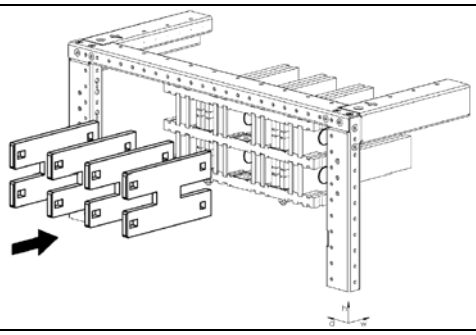

Installation of the vertical parts of horizontal subdivision 2b for main busbars	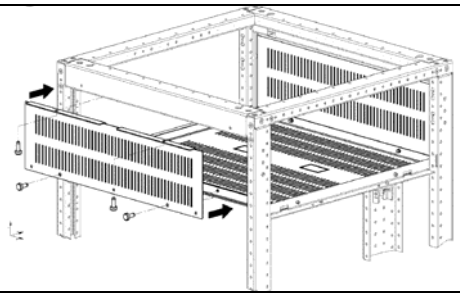
Installation of the PE buses	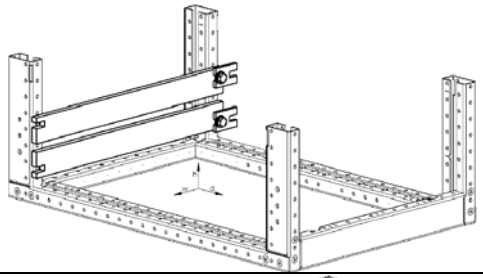
Installation of the push-on terminal strips in the form of inner subdivision 3, 4	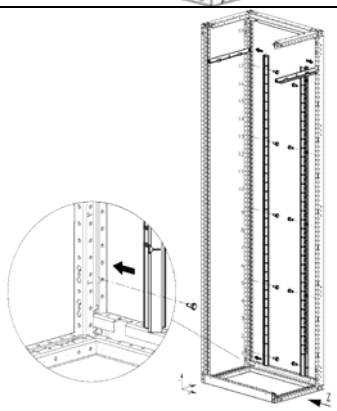
Installation of the panel partition	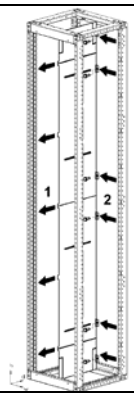

Installation of the base panel

Tip

Install the cable brackets in order to reserve the installation compartment.

Ideally, the panel partition should be installed on the left-hand side of the rack.
If there already is a vertical distribution busbar system positioned on the left-hand side of the rack, locating the partition on the right-hand side of the neighbouring panel's rack makes it easier to access the distribution busbar system, and thus to install the system.

When installing the vertical distribution busbar system on a non-cascaded basis, install the bracing elements (depending on the cross-section of the busbar and Icw) together with the supports for the distribution busbar system.

When installing the connection lugs for main busbars - vertical distribution busbars and the connection lugs for the main busbar system, insert the lugs first and tighten the bolts by hand. Once all of the lugs have been inserted and aligned, the bolts can be tightened to the specified torque (see section 5.2).

Transportable assemblies are created in this stage of the installation process.

4.3 Installation of the Sentron 3WL

Installation of the assembly kit for the Sentron 3WL Installation of the circuit-breaker	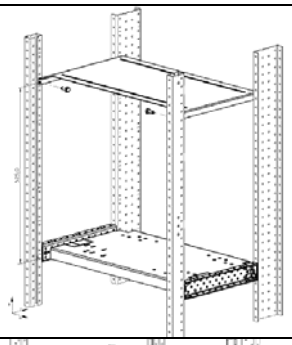
Installation of subdivisions 3, 4	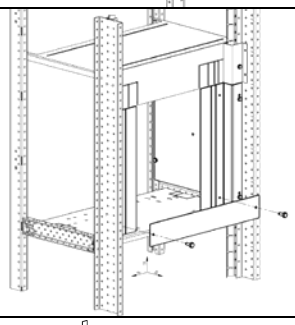
Installation of the connecting busbars for the Sentron 3WL on vertical distribution busbars (cascaded)	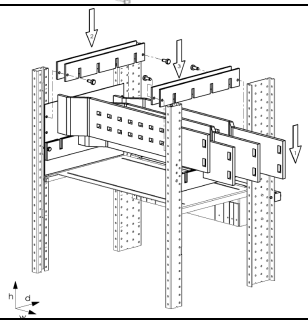

Installation of the connecting busbars for the Sentron 3WL on the cable connection Installation of the current transformer	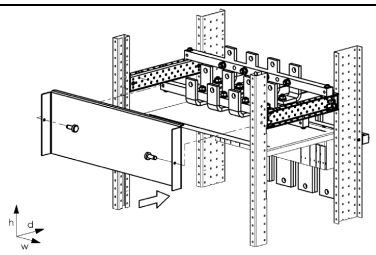
Installation of subdivisions 3, 4 for the connecting busbars for the Sentron 3WL on vertical distribution busbars	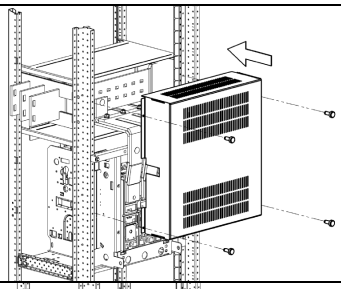
Installation of subdivisions 3, 4 for the connecting busbars for the Sentron 3WL on the cable connection	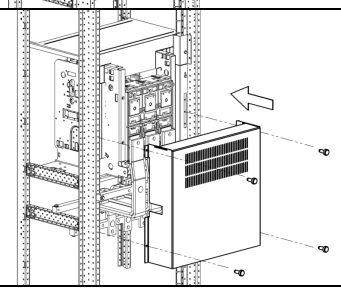

Installation of the Sentron 3WL

Tip

Dimensions of bushing-type current transformers for current metering:

		HA [mm]	BA [mm]	TA [mm]	Hi [mm]	Bi [mm]
Sentron 3WL BG I	Up to 1250 A	101.5	85	45	30.5	50.5
	Up to 1600 A	132	86	65	30.5	50.5
Sentron 3WL BG II	Up to 3200 A	170	129	65	55,5	100,5

Dimensions of bushing-type current transformers

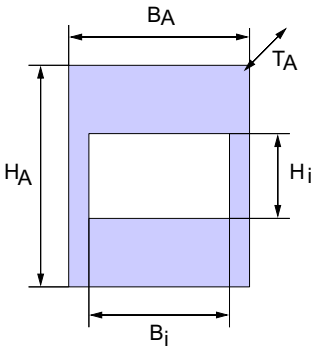

Figure 4-2 Bushing-type current transformers

4.4 Installation of the Sentron 3VL

Installation of the assembly kit for the Sentron 3VL Installation of the circuit-breaker	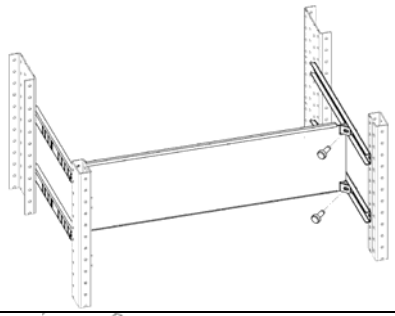
Installation of the connection for the Sentron 3VL onto vertical distribution busbars (cascaded)	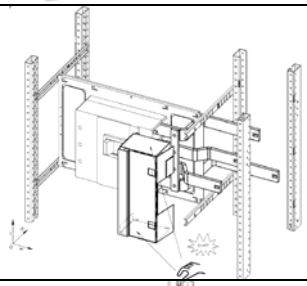
Installation of the cable connection for the Sentron 3VL Installation of the current transformer	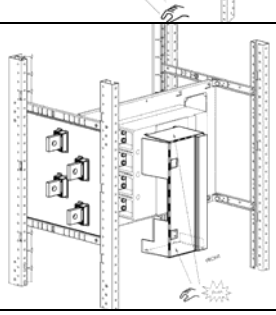
Installation of subdivisions 3, 4	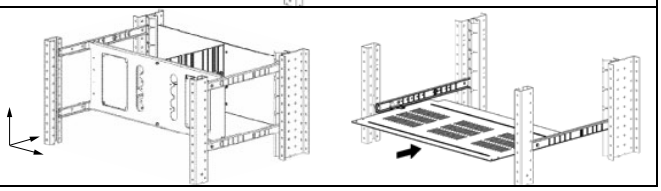

Installation of the Sentron 3VL

Tip

Circuit-breakers up to 160 A can be connected to cables.

Dimensions of bushing-type current transformers for current metering:

Sentron 3VL	HA [mm]	BA [mm]	TA [mm]	Hi [mm]	Bi [mm]
250/400 A	78.5	61	40	10.5	30.5
630 A	88.5	71	50	12.5	40.5

Dimensions of bushing-type current transformers

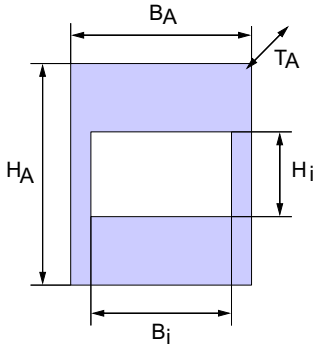

Figure 4-3 Bushing-type current transformers

4.5 Installation of the Sentron 3K

Installation of the assembly kit for the Sentron 3K Installation of the circuit-breaker	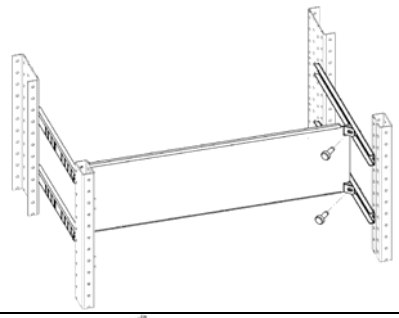
Installation of subdivisions 3, 4	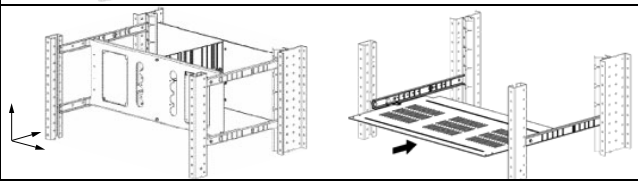

Installation of the Sentron 3K

4.6 Installation of modular installation devices, modular device panel

Installation of the assembly kit for a modular device panel	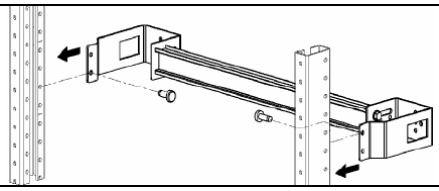
Installation of subdivisions 3, 4	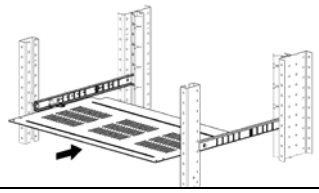

Installation of the assembly kit for a modular installation device panel

Installation of the assembly kit for a modular device panel	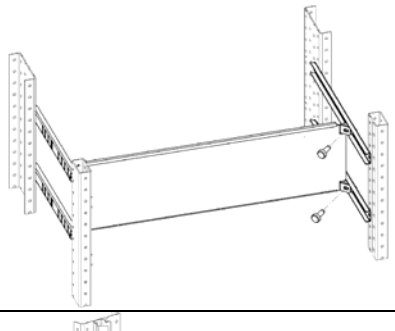
Installation of subdivisions 3, 4	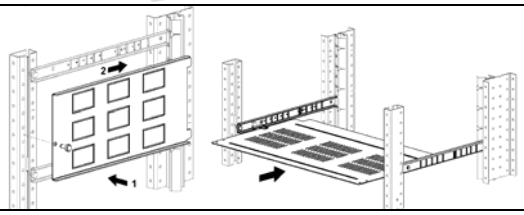

Installation of the assembly kit for a modular device panel

4.7 Installation of the enclosure

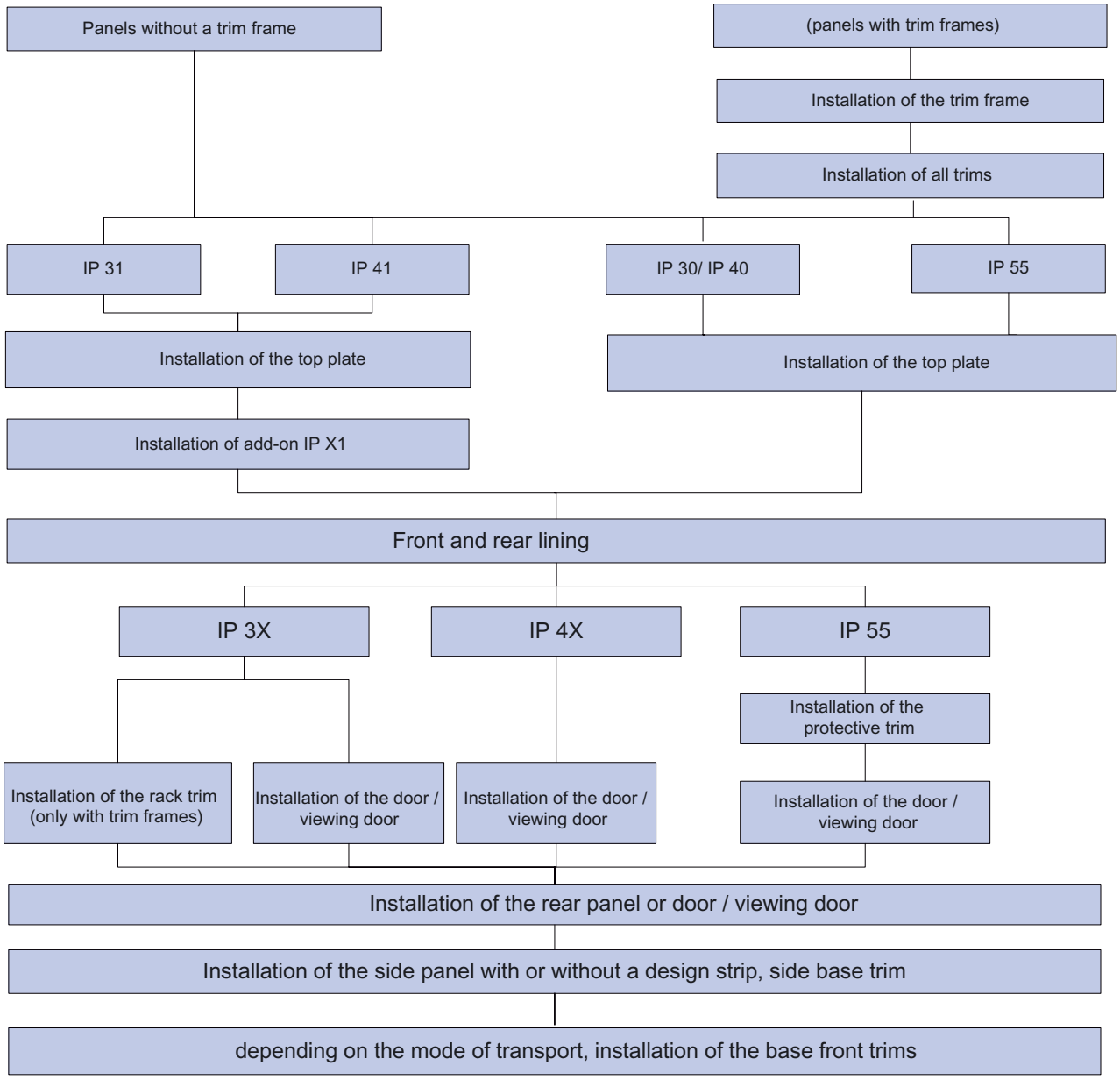

Figure 4-4 Installation of the enclosure

General production information 5

5.1 Tools

Use high-quality tools and keep them maintained in accordance with the manufacturer's instructions. The following tools are required for installing the SIVACON S4:

a power screwdriver with an adjustable torque (4 Nm, 8 Nm)

- Torx M6 1/4" bit, 50 mm long
- Torx M6 1/4" bit, 200 mm long
- A torque spanner a with setting ranges up to 90 Nm
- Philips screwdriver, size 2
- Other tools:

Thread	Width A/F		
M6	SW10	Open-end spanner	Hexagon-head attachment
M8	SW13		
M10	SW17		
M12	SW19		

Tools – open-end spanner, hexagon-head attachment

5.2 Screw connections

Bolts of strength class 8.8 should generally be used for connections. This is the only way of ensuring that the product properties determined during type-testing are maintained over the product's expected useful life. Lower-strength bolts cause the connection to fail for a variety of reasons:

- If you use the torque specified for class 8.8 bolts, the bolts are over-extended, causing them to break or causing reduced pretension.
- If you apply the torque which is required to achieve the relevant bolt strength, the reduced pretension leads to lower current-carrying capacity due to higher transfer resistances, or the same torque as for 8.8 class bolts, this leads to increased heating and connection failure.

Warning

Use the standard parts which are on offer in the catalog for screw connections which have been created properly and comply with the torques which are specified in the manual.

5.2.1 Legend for standard part representation

	Thread-forming screw with an anti-friction coating to DIN 7500
	Hexagon-head bolt to ISO 4014
	Square saucer-head bolt to DIN 603
	T-head bolt
	Hexagon nut to ISO 4032
	Strain washer to DIN 6796
	Contact washer to SN 70093
	Washer to DIN 125
	Tab washer to BN 208012
	Busbar clip

Legend for standard parts

5.2.2 Mechanical screw connections

Follow the information in the operating instructions about installing equipment.

Bolt		Material combination					Tightening torque [Nm] ±15 %			
							M6	M8	M10	M12
	-	Galvanized steel	Galvanized steel	-	-	-	4	-	-	-
	-	Galvanized steel	Galvanized steel				-	20	40	70

		Powdered steel	Galvanized steel	-	-	-	4	-	-	-
		Powdered steel	Galvanized steel	-			-	20	40	70
	-	Insulating plate	Galvanized steel	-	-	-	4	-	-	-
		Insulating plate	Galvanized steel				-	13	25	44
	-	Copper	Insulating plate				-	13	25	44
		Insulating plate	Copper				-	13	25	44
		Insulating plate	Insulating plate				-	13	25	44

Mechanical screw connections

5.2.3 Live screw connections

Follow the information in the operating instructions about installing equipment.

Bolt			Material combination			Hexag on nut	Tightening torque [Nm] ±15 %		
							M8	M10	M12
	-	-	Copper - copper		-		20	40	70
	-		Copper - copper		-		20	40	70
	-		Copper - cable lug		-		20	40	70
	-	-	Copper - cable lug				25	50	88
			Copper - cable lug				25	50	88
			Copper - cable lug - cable lug				25	50	88
	-	-	DIN mounting rail - solid copper		-		-	40	-

	-	-	DIN mounting rail - flexible copper				-	50	-
	-		High-edge screw connection with a busbar bracket		-		-	40	-

Live screw connections

5.2.4 Non-permissible screw connections

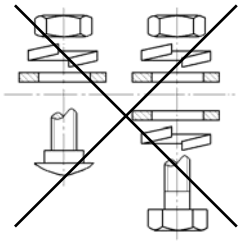

Non-permissible screw connections

The resilient effect of screw connections with a lock washer conforming to DIN 128 is diminished at relatively low prestressing forces. This makes them ineffective as a means of securing the setting. The lock washer is also unable to prevent the hexagonal nut from coming loose.

This combination of standard parts cannot be used.

Warning

Use the standard parts which are on offer in the catalog for screw connections which have been created properly.

5.2.5 Testing torques for screw connections

Strength class 8.8. of standard parts is important for creating screw connections, at the same time complying with the corresponding torques in the production and testing of screw connections. This is the only way of ensuring that the product properties determined during type-testing are maintained over the product's expected useful life.

Thread	Production (Nm)	Testing (Nm)
M6	4	2,5
M8	13	9
	20	17
	25	17
M10	25	17
	40	35
	50	35
M12	44	30
	70	60
	88	60

Tightening torques

Devices are to be connected at the torques which are specified in the operating instructions for the devices.

5.2.6 Marking torque-tested screw connections

screw connections are color-coded with dots of paint via two moving connection elements. This means that the coat of paint becomes visibly damaged if the screw connection is moved later on.

Once the screw connection has been created, the production torque is applied with the torque spanner. The connection is then marked blue.

The testing torque is lower than the production torque. Once it has been tested, the screw connection is marked red.

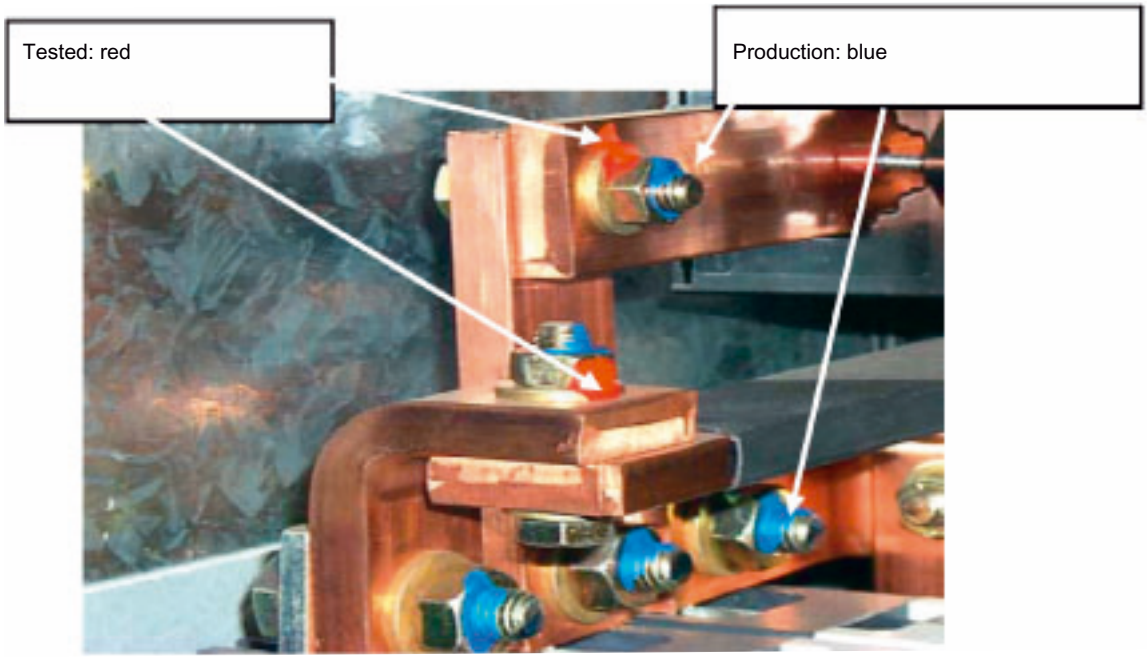

Figure 5-1 Marking torque-tested screw connections

5.3 Copper busbars

Solid copper busbars with the following technical data are to be used for SIVACON S4:

- Short description conforming to EN 13601 Cu-ETP-R250
- Tensile strength 250 N/mm²
- Yield point 200 N/mm²

This is the only way of ensuring that the product properties determined during type-testing are maintained over the product's expected useful life.

In the case of insulated, flexible copper busbars, use semi-finished parts with an operating temperature of ≧105°C.

Notice

Use the solid and flexible copper busbars which are on offer in the catalog.

5.3.1 Perforations in copper busbars

The following perforations in copper busbars are suitable for connection to the main busbar system and the vertical busbar system.

The rated current of the copper busbar cross-sections cannot be commented upon without cross-references to the devices connected the permissible heating and, to a large degree, the actual heating that occurs is determined by the devices.

There is no need to grease the points of contact.

	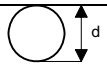	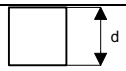 Using saucer-head bolts	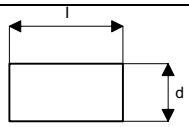 Using saucer-head bolts and as tolerance compensation
Thread	D	D	D x L
M8	9 mm	9 mm	9 mm x 13 mm
M10	11 mm	11 mm	11 mm x 16 mm
M12	14 mm	12.5 mm	12.5 mm x 20 mm

Perforations in copper busbars

Busbar width	Perforations for bolts with an M10 thread
25, 30, 40, 50 mm	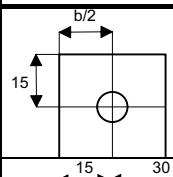
60 mm	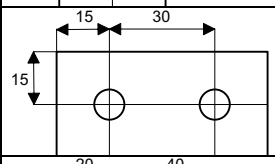
80 mm	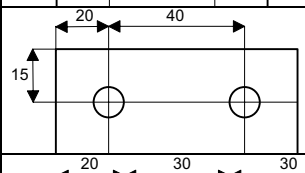
100 mm	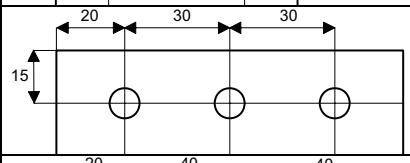
120 mm	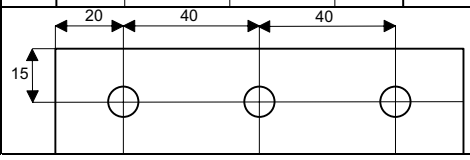

Perforations in copper busbars

Notice

For type-tested connections, use the assembly kits which are available in the catalog for the connection of copper busbars.

5.3.2 Surface treatment of copper busbars

Copper busbars should only be touched with cotton gloves in order to avoid marks.

Wipe copper, silver-plated or tin-coated contact surfaces with a soft clean cloth.

Carefully remove oxidized silver or tin coatings with a very fine abrasive fleece.

If copper-contact marks appear, brush them to a distance of approx. 10 mm on either side using orbital grinders.

There is no need to grease the points of contact.

5.3.3 Bending copper busbars

Bending copper busbars causes them to stretch in length. Therefore, you need to remember shortening factors depending on the production technology and the thickness of the material.

5.3.4 Processing flexible copper busbars

Flexible copper busbars are machined in the following stages:

1. Determine the length and shape using auxiliary wire
2. Cut off the length + 10 mm
3. Bend and / or twist
4. Cut end 1 straight and strip of the insulation
5. Fix end 1 in place
6. Perforate end 1 if necessary
7. "Hold" and correct the busbar
8. Cut end 2 straight and strip of the insulation
9. Perforate end 2 if necessary

5.4 Cables and leads

5.4.1 Rated currents for cables and leads

The specified rated currents apply to leads with the following properties:

- Rated insulation voltage in accordance with the operating voltage
- Permissible operating temperature ≧70°C
- Permissible short-circuit temperature ≧150°C
- Finely stranded conductor
- one wire per lead

Rated current [A]	Lead cross-section [mm²]
0 -- 8	1
8 -- 12	1,5
12 -- 20	2,5
20 -- 25	4
25 -- 32	6
32 -- 50	10
50 -- 65	16
65 -- 85	25
85 -- 115	35
115 -- 150	50
150 -- 175	70
175 -- 225	95

Rated currents for cables and leads

5.4.2 Laying cables and leads

Leads without short-circuit protection are potentially very hazardous and must conform to the conditions stipulated in IEC 60439-1, subsection 7.5.5.3.

Either use leads which are specially protected by virtue of their insulation or increase the protection against a short circuit occurring by laying leads with basic insulation (IEC 60439-1, Table 5).

Control leads may not be laid in cable trunking.

5.4.3 Stripping insulation, wire end ferrules, cable lugs

Schematic representation	Quality features - Stripping insulation
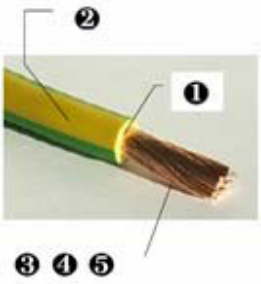	1. Separate the insulation cleanly. Heat-resistant leads with ETFE insulation should ideally be stripped using tools with shaped blades which correspond to the cross-section of the lead.
	2. Insulation is undamaged. Tool marks are permissible.
	3. Twisting is unchanged. If necessary, restore the twisting by turning the wires slightly, although avoid over-twisting them.
	4. Undamaged braided wires, bright.
	5. The lengths of bare wire must correspond to the crimp contacts or connections.

Quality features - Stripping insulation

Schematic representation	Quality features - Wire end ferrules
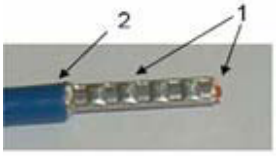	1. The strand is the full length of the crimping area. All braided wires have been included. The crimp contact is undamaged.
	2. No insulation protrudes into the crimping area.
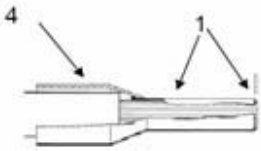	4. The insulation on the wire is completely enclosed by the insulating sleeve (with plastic collars in the case of wire end ferrules).

Quality features - Wire end ferrules

Schematic representation	Quality features - Cable lugs
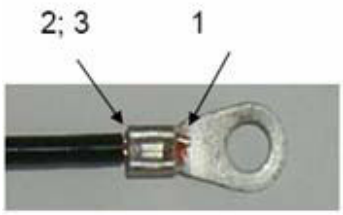	1. The strand is the full length of the crimping area. All braided wires have been included. The crimp contact is undamaged.
	2. No insulation protrudes into the crimping area.
	3. No deformation occurs on the crimping contact.

Quality features - Cable lugs

5.5 Marking conductors

Conductors are marked by a marking band labelled L1, L2, L3, L+, L-, N, M, PE or PEN in compliance with IEC 60445 and IEC 60446.

In order to ensure that the marking is permanent, wrap the conductor round so that there is a double layer on the visible side.

5.6 Packaging and transport of dismantled panels

The packaging must protect the switchgear against the influence of any ambient factors during transport and storage. The limits specified under IEC 60439-1 for the transport and storage of switchgear may not be exceeded.

The switchgear must be transported and stored at a relative humidity of 50 % and at a temperature of 40°C. Higher relative humidity levels are permissible at lower temperatures, e.g. 90 % at 20°C. Furthermore, a temperature of between -25°C and +55°C is permissible (for transport and storage), as are temperatures of up to +70°C for short spells of up to 24 hrs.

Notice

As regards induced vibrations during transport, it is assumed that equipment will be transported in trucks with an air suspension.

Standards, tests and marking 6

The international standard IEC 60439-1 applies to low-voltage switchgear and controlgear assemblies, as type-tested switchgear and controlgear assemblies (TTA) and partially type-tested switchgear and controlgear assemblies (PTTA) with a maximum rated voltage of 1000 VAC, at frequencies of up to 1000 Hz or at 1500 VDC. The purpose of this standard is to specify definitions, operating and ambient conditions, construction requirements, characteristic technical data and tests for low-voltage switchgear and controlgear assemblies.

The standards IEC 62208 and EN 62208 contain the definitions, classifications, technical data and testing requirements for housings which are used for low-voltage switchgear and controlgear assemblies. The following tests have been conducted on the basis of this standard for SIVACON S4:

- Static load
- Hoisting test
- IK marking

Legislation in force in a particular state or country can make certain standards binding and necessitate the addition of other safety requirements. They are to be complied with by the switchgear manufacturer.

6.1 Tests for low-voltage switchgear and controlgear assemblies

In accordance with IEC 60439-1, tests for verifying the characteristic data for a switchgear and controlgear assembly involve **type tests** and **routine tests**.

SIVACON S4 is a standardized, type-tested block system for the construction of low-voltage switchgear and controlgear assemblies. The characteristic data for the low-voltage switchgear and controlgear assembly has been verified by means of type tests in accordance with IEC 60439-1.

6.1.1 Type-tests for low-voltage switchgear and controlgear assemblies

Type tests are conducted on a specimen switchgear and controlgear assembly or on parts of switchgear and controlgear assemblies which are produced in an identical or similar design.

The following type tests have to be provided:

Requirements	Verification in the case of TTA by:
1. Temperature-rise limit	Test
2. Dielectric strength	Test
3. Short-circuit strength	Test
4. Effectiveness of the protective conductor	Test
5. Creepage distances and clearances	Test
6. Mechanical function	Test
7. IP degree of protection	Test
8. EMC	Test
9. Glow-wire test	Test

Type tests

6.1.2 Routine tests for low-voltage switchgear and controlgear assemblies

Routine tests are to be conducted on each new switchgear and controlgear assembly following assembly by the switchgear manufacturer.

The following routine tests are to be conducted:

Consec. no.	Test type	Test		IEC 60439-1 Section	Result Tester
1	-	Type test		8.2.1- 8.2.7	passed
2	P	Mechanical function test (actuators, locks, etc.)	ROUTINE TESTS	8.3.1	
3	S	Devices installed as per regulations			
4	S	Leads correctly laid			
5	S/P	Degree of protection of the housing			
6	S/P	Clearance, creepage and spaces			
7	P	Connection of structural parts and of conductors to one another and to devices (spot checks on tightening torques)			
8.1	P/V	Compliance of wiring with circuit documentation			
8.2	V	Compliance of markings, labels, completeness, etc. with the circuit documentation and other documents			
9	P	Dielectric test		8.3.2	
10	S/P	Protective measures and continuous PE conductor connections		8.3.3	
11	P	Electrical function test (where expressly stipulated)		8.3.1	
Abbreviations: S = Visual inspection for compliance with requirements P = Manual test with mechanical or electric measuring equipment V = Comparison with production documentation					

Routine tests

The requirements of the standard, product properties and installation procedure are implemented below into a handy checklist for routine tests.

Notice

Legislation in force in a particular state or country can make certain standards binding and necessitate the addition of other safety requirements. They are to be complied with by the switchgear manufacturer.

Comply with the requirements specified in the operating instructions for the installed devices.

Routine test following the installation of the racks and busbars (removal of the base panel)

Customer :
Job number :
Tester :
Date :

1	Identity check/Visual inspection	
	1	Number of panels as required
	2	Arrangement of panels as required
	3	Transport packaging as required
	4	Installation of the devices as required
	5	Technical data and specified conduction direction as required
	6	Busbar cross-section as required
	7	Additional requirements for Cu busbars complied with (e.g. silver-plated, tin-coated, painted or insulated)
2	Mechanical test	
	1	Tightening torque for the contact screw connections complied with and marked
	2	Tightening torque of other screw connections on metal sheets, rack parts, etc. Test and mark 5 pcs per panel
	3	Screw connections for the panel group as required
3	Insulation tests	
	1	Main circuit insulated from structural parts 3500 V; 1 s; Take note of the reduction in voltage in the installed devices!
4	Completion of the part test	
	1	Apply a part test sticker following assembly of the racks and busbars and sign it

Routine tests on the removal of the base panel

Routine tests after completion and before dispatch

Customer :
Job number :
Tester :
Date :

1	Visual inspection/Identity check	
	1	Part test conducted following assembly of the racks and busbars and sticker affixed
	2	Panel description as required
	3	Rating plate for the plant and rating plates for the functional units as required
	4	Devices and equipment markings in accordance with the parts list
	5	Installation of the devices as required
	6	Compliance with the plug-in frame and circuit breakers as required
	7	Plant is fully equipped with functional units
	8	Busbars and control voltage bus marked as required
	9	Terminals marked as required
	10	Panel components and mimic diagram as required
	11	Color of the enclosure as required, no surface defects
	12	Enclosure parts assembled as required
	13	Degree of protection as required
	14	Additional criteria met as required
2	Cable routing	
	1	Insulated leads not in contact with bare, active parts or sharp edges. (Covered places included during interim testing)
	2	Conductor colors as required
	3	Requirement to lay electric circuits separately met
	4	Cross-sections of main and control leads as required
	5	Wiring correctly resistant to short circuits
	6	Loose ends of leads marked (for missing devices)
	7	Leads running to moving equipment racks in the panel / on the door are sufficiently long and routed as required
	8	Torques and perfect contact at device and terminal-connection points guaranteed, test tightened terminal points at 10 device-connection points per panel
3	Mechanical test	
	1	Faultless mechanical lock on circuit breakers
	2	Devices, device racks, device modules are correctly secured in place
	3	Doors work properly
4	Protective measures	
	1	Check all PE conductor connections for continuity, in particular screw and plug-in connections, check for elements which have penetrated the paint on painted surfaces
	2	Complete shock-hazard protection on operating elements (pay attention to the leg area)
	3	Shock-hazard protection applied to bare conductor at the in-feed end

5	Electrical test	
	1	Electrical test in accordance with job-specific circuit documents including: • Working-current and idle-current contacts or functionality of all devices • Operating, test and isolated positions of circuit breakers
	2	Continuity test on all leads and current paths which are not included in the function test
	3	Devices configured / programmed
6	PROFIBUS	
	1	Visual inspection: No contact between the green and red leads along the route of the wiring
	2	Wiring test using a test unit, test along the bus line of each transportable assembly, disconnecting the repeater and termination block
	3	Set the DIP switches on the bus connector, OLM, repeater … in accordance with the bus plan
7	Dielectric test	
	1	Isolate the main circuits from the structural parts (downstream of the 1st protective device) .....V; 1 s.
	2	Isolate the main circuits from the structural parts (upstream of the 1st protective device) .....V; 1 s.
	3	Isolate the auxiliary circuits from the structural parts .....V; 1 s.
8	Conclusion of tests	
	1	Cleanliness of the plant
	2	Circuit breakers set to the required position for dispatch
	3	Revised documentation copied and distributed
	4	List of missing devices attached
	5	Apply a part test sticker following completion and sign it
	6	Accessories pack complete
	7	Plant released for dispatch

Routine tests after completion and before dispatch

6.2 CE marking

The manufacturer has sole responsibility for applying the CE marking. By affixing this, the manufacturer confirms that the products conform to the requirements set out in all the EU directives which govern the product.

Low-voltage switchgear and controlgear assemblies are subject to the Low-Voltage Directive and to the EMC Directive.

The marking is mandatory for any products being marketed throughout the entire European Union.

The switchgear manufacturer is required to compile a CE declaration of conformity and CE label for the low-voltage switchgear and controlgear assemblies built from the standardized SIVACON S4 block system.