List Manual 06/2005 Edition

sinamics

SINAMICS S

SIEMENS

SIEMENS

SINAMICS

SINAMICS S List Manual

Manual

Preface, Contents

Parameter 1

Function diagrams 2

Faults and Alarms 3

List of Abbreviations

References

Index

Valid for

Drive	Software version
SINAMICS S	2.3

6SL3 097-2AP00-0BP3

Edition 06.2005

Safety Information

This manual contains information that you must observe for your personal safety and to avoid material damage. The information is indicated by a warning triangle and displayed as follows according to the level of risk:

Danger

Indicates an imminently hazardous situation which, if not avoided, **will** result in death or serious injury or in substantial property damage.

Warning

Indicates a potentially hazardous situation which, if not avoided, **could** result in death or serious injury or in substantial property damage.

Caution

Used with the safety alert symbol indicates a potentially hazardous situation which, if not avoided, **may** result in minor or moderate injury or in property damage.

Caution

Used without safety alert symbol indicates a potentially hazardous situation which, if not avoided, **may** result in property damage.

Notice

Used without the safety alert symbol indicates a potential situation which, if not avoided, **may** result in an undesirable result or state.

Qualified Personnel

The device must only be commissioned and operated by **qualified personnel**. For the purpose of the safety information in this documentation, a "qualified person" is someone who is authorized to operate, ground, and tag devices, systems, and circuits in accordance with established safety procedures.

Proper Use

Observe the following information:

Warning

The device must only be used for the applications specified in the catalog and in the technical description. The device must only be used in conjunction with external devices and components recommended or approved by Siemens.

The successful and safe operation of this device depends on correct transport, proper storage and installation, as well as careful operation and maintenance.

Trademarks

SIMATIC®, SIMATIC HMI®, SIMATIC NET®, SIMODRIVE®, SIMOTION®, SINAMICS® and SINUMERIK® are trademarks of SIEMENS AG.

The designations in this documentation may be trademarks whose use by third-parties for their own purposes may infringe the rights of the owner.

Copyright Siemens AG, 2005. All rights reserved

The reproduction, transmission or use of this document or its contents is not permitted without express written authority. Offenders will be liable for damages. All rights, including rights created by patent grant or registration or a utility model or design, are reserved.

Siemens AG
Automation & Drives
Motion Control Systems
P.O. Box 3180, D-91050 Erlangen
Federal Republic of Germany

Exclusion of Liability

We have conscientiously checked the contents of this manual to ensure that they coincide with the hardware and software described. Since deviations cannot be precluded entirely, we cannot guarantee complete conformance. However, the data in this manual is reviewed regularly and any necessary corrections included in subsequent editions. We are grateful for any recommendations or suggestions.

© Siemens AG, 2005.
Subject to technical changes without notice.

Preface

Information about the SINAMICS documentation

The SINAMICS documentation is divided into the following areas:

- General documentation / catalogs
- User documentation
- Manufacturer/service documentation
- Electronic documentation

Table Preface-1Useful phases and available documentation/tools

Useful phase	Document/Tool
Exploratory	SINAMICS S Sales Documentation
Planning/configuration	SIZER configuration tool
Decision/ordering	SINAMICS S Catalog
Installation/assembly	• SINAMICS S120 Equipment Manual for Control Units and Supplementary System Components • SINAMICS S120 Equipment Manual Power Modules Booksize • SINAMICS S120 Equipment Manual Power Modules Chassis • SINAMICS S150 Operating Manual
Commissioning	• STARTER parameterization and commissioning tool • SINAMICS S120 Getting Started • SINAMICS S120 Installation and Start-Up Manual • SINAMICS S120 CANopen Installation and Start-Up Manual • SINAMICS S List Manual • SINAMICS S150 Operating Manual
Usage/operation	• SINAMICS S120 Installation and Start-Up Manual • SINAMICS S List Manual • SINAMICS S150 Operating Manual
Maintenance/servicing	• SINAMICS S120 Installation and Start-Up Manual • SINAMICS S List Manual • SINAMICS S150 Operating Manual

This documentation is part of the technical customer documentation for SINAMICS. All documents can be obtained separately.

© Siemens AG, 2005. All rights reserved

You can obtain detailed information about the documents named in the documentation overview and other documents available for SINAMICS from your local Siemens office.

In the interests of clarity, this documentation does not contain all the detailed information for all product types and cannot take into account every possible aspect of installation, operation, or maintenance.

The contents of this documentation are not part of an earlier or existing agreement, a promise, or a legal agreement, nor do they change this. All obligations entered into by Siemens result from the respective contract of sale that contains the complete and sole valid warranty arrangements. These contractual warranty provisions are neither extended nor curbed as a result of the statements made in this documentation.

Audience

This documentation is aimed at machine manufacturers, commissioning engineers, and service personnel who use SINAMICS.

Objective

This manual contains the comprehensive information about parameters, function diagrams and faults and alarms required to commission and service the system.

It must be used as a supplementary document to the other manuals and tools available for the product.

Finding Your Way Around

The following guides are provided to help you locate information in this manual:

1. Contents
   - General table of contents for complete manual (after the preface).
   - Table of contents for function diagrams (Section 2.1).
2. List of Abbreviations
3. References
4. Index Glossary

© Siemens AG, 2005. All rights reserved

Technical Support

If you have any further questions, please call our hotline:

Tel.	+49 (0) 180 5050 - 222
Fax:	+49 (0) 180 5050 - 223
Internet:	http://www.siemens.com/automation/support-request

Please send any questions about the documentation (e.g. suggestions for improvement, corrections) to the following fax number or email address:

Fax:	+49 (0) 9131 98 - 2176
Fax form:	See feedback page at the end of this documentation
E-mail:	motioncontrol.docu@erlf.siemens.de

Internet Address

Up-to-date information about our products can be found on the Internet at the following address:

http://www.siemens.com/motioncontrol

Information about SINAMICS can be found on the Internet at the following address:

http://www.siemens.com/sinamics.

© Siemens AG, 2005. All rights reserved

© Siemens AG, 2005. All rights reserved

Contents

1 Parameter 1-11

1.1 Overview of parameters 1-12
1.1.1 Explanation of list of parameters 1-12
1.1.2 Numerical ranges of parameters 1-22
1.2 List of parameters 1-24
1.3 Parameters for data sets 1-693
1.3.1 Parameters for command data sets (CDS) 1-693
1.3.2 Parameters for drive data sets (DDS) 1-696
1.3.3 Parameters for encoder data sets (EDS) 1-705
1.3.4 Parameters for motor data sets (MDS) 1-706

2 Function diagrams 2-709

2.1 Contents: function diagrams 2-711
2.2 Explanations for the function block diagrams 2-719
2.3 Overviews 2-724
2.4 CU320 input/output terminals 2-744
2.5 CX32 input/output terminals 2-751
2.6 PROFIBUS 2-755
2.7 Internal control/status words 2-782
2.8 Sequence control 2-793
2.9 Brake control 2-796
2.10 Safety Integrated 2-801
2.11 Setpoint channel 2-807
2.12 Setpoint channel not activated 2-817
2.13 Servo control 2-819
2.14 VECTOR control 2-845
2.15 Technology functions 2-871
2.16 Technology controller 2-873
2.17 Messages and monitoring functions 2-877
2.18 Faults and Alarms 2-883
2.19 Test sockets 2-888
2.20 Data records 2-890
2.21 Basic Infeed. 2-895
2.22 Smart Infeed 2-902
2.23 Active Infeed 2-911

© Siemens AG, 2005. All rights reserved

2.24 Terminal Board 30 (TB30) 2-922
2.25 Communication Board CAN 10 (CBC10) 2-927
2.26 Terminal Module 15 for SINAMICS (TM15DI/DO) 2-934
2.27 Terminal Module 31 (TM31) 2-938
2.28 Terminal Module 41 (TM41) 2-949
2.29 Voltage Sensing Module (VSM) 2-951

3 Faults and Alarms 3-955
3.1 Overview of Faults and Alarms 3-956
3.1.1 General information about faults and alarms 3-956
3.1.2 Explanation of the list of faults and alarms 3-960
3.1.3 Numerical ranges of faults and alarms 3-963
3.2 List of Faults and Alarms 3-964

List of Abbreviations Abbreviations-1175

References References-1181

Index Index-1187

© Siemens AG, 2005. All rights reserved

Parameter

1

Content

1.1	Overview of parameters	1-12
1.2	List of parameters	1-24
1.3	Parameters for data sets	1-693

© Siemens AG, 2005. All rights reserved

1.1 Overview of parameters

1.1.1 Explanation of list of parameters

Basic structure of parameter descriptions

The data in the following example has been chosen at random. The table below shows all the information which can be included in the description of a parameter. Some of the information is optional.

The structure of the parameter list (See section 1.2) is as follows:

- Start of example- -

pxxxx[0...n]	**BICO: Full parameter name / Abbreviated name**		
Drive object (Function Module)	**Changeable in:** C1(x), C2(x), U, T		**Access level:** 2
	Data type: Integer16	**Data set:** CDS	**Function diagram:** 2080
	P group: Cl.-lp. control	**Unit group:** TIME	**Unit selection:** -
	Min	**Max**	**Factory setting**
	0.00 [Nm]	10.00 [Nm]	2.00 [Nm]

Description: Text

Values:
0: Name and meaning of value 0
1: Name and meaning of value 1
2: Name and meaning of value 2
etc.

Recommendation: Text

Index:
[0] = Name and meaning of index 0
[1] = Name and meaning of index 1
[2] = Name and meaning of index 2
etc.

Bit array:

Bit	Signal name	0-signal	1-signal	FP
00	Name and meaning of bit 0	No	Yes	8010
01	Name and meaning of bit 1	No	Yes	-
02	Name and meaning of bit 2	No	Yes	8012
	etc.			

Depends on: Text
See also: pxxxx, rxxxx
See also: Fxxxxx, Axxxxx

Danger! Corresponds to safety notice "Danger with warning triangle".

Warning! Corresponds to safety notice "Warning with warning triangle".

Caution! Corresponds to safety notice "Caution with warning triangle".

Caution: Corresponds to safety notice "Caution without warning triangle".

Notice: Corresponds to safety notice "Notice without warning triangle".

Note: Information which might be useful.

- End of example- -

© Siemens AG, 2005. All rights reserved

pxxxx[0...n] Parameter number

The parameter number consists of a "p" or "r", followed by the parameter number and the index (optional).

Examples of number representation in the parameter list:

- p... Adjustable parameter (read and write parameter)
- r... Visualization parameters (read-only)
- p0918 Adjustable parameter 918
- p0099[0...3] Adjustable parameter 99, indices 0 to 3
- p1001[0...n] Adjustable parameter 1001, indices 0 to n (n = configurable)
- r0944 Visualization parameter 944

Other examples of notation in the documentation:

- p1070[1] Adjustable parameter 1070, index 1
- p2098[1].3 Adjustable parameter 2098, index 1 bit 3
- r0945[2](3) Visualization parameter 945, index 2 of drive object 3
- p0795.4 Adjustable parameter 795, bit 4

The following applies to adjustable parameters:

The "shipped" parameter value is specified under "Factory setting" with the relevant unit in square parenthesis. The value can be adjusted within the range defined by "Min" and "Max".

The term "linked parameterization" is used in cases where changes to adjustable parameters affect the settings of other parameters.

Linked parameterization can occur, for example, as a result of the following actions or parameters:

- Execute macros

  p0015, p0700, p1000, p1500
- Set PROFIBUS telegram (BICO interconnection)

  p0922
- Set component lists

  p0230, p0300, p0301, p0400
- Calculate and preset automatically

  p0112, p0340, p0578, p3900
- Restore factory settings

  p0970

The following applies to visualization parameters:

The fields "Min", "Max" and "Factory setting" are specified with a dash "-" and the relevant unit in square parenthesis.

© Siemens AG, 2005. All rights reserved

BICO: Full parameter name / Abbreviated name

Some parameters have the following abbreviations in front of their name:

- BI: Binector input
  This parameter is used for selecting the source of a digital signal.
- BO: Binector output
  This parameter is available as a digital signal for interconnection with other parameters.
- CI: Connector input
  This parameter is used for selecting the source of an analog signal.
- CO: Connector output
  This parameter is available as an "analog" signal for interconnection with other parameters.
- CO/BO: Connector/binector output
  This parameter is available as an "analog" and digital signal for interconnection with other parameters.

Drive object (Function Module)

A drive object (DO) is an independent, "self-contained" functional unit which possesses its own parameters and, in some cases, faults and warnings.

When carrying out commissioning using the commissioning software, you can select/deselect additional functions and their parameters by activating/deactivating Function Modules accordingly.

Note:

References: /IH1/ SINAMICS S120 Commissioning Manual

The parameter list specifies the associated drive object and Function Module for each individual parameter.

Examples:

- p1070 CI: Main setpoint
  SERVO (Extended setp.), VECTOR
  The parameter is available only in association with drive object SERVO and the "Extended setpoint channel" Function Module or with drive object VECTOR irrespective of activated Function Modules.
- p1055 BI: Jog bit 0
  SERVO, VECTOR
  The parameter is available in association with drive objects SERVO and VECTOR irrespective of activated Function Modules, i.e. it is available with every activated Function Module belonging to the drive object.

A parameter can belong to either one, several, or all drive objects.

© Siemens AG, 2005. All rights reserved

The following information relating to "Drive object" and "Function Module" can be displayed under the parameter number:

Table 1-1 Data in "Drive object (Function Module)" field

Drive object (Function Module)	Meaning
All objects	This parameter belongs to all drive objects.
A_INF	Active Infeed closed-loop control Closed-loop-controlled, self-commutated infeed/regenerative feedback unit for generating a constant DC-link voltage.
A_INF (Parallel)	Active Infeed with "Parallel circuit" function module (r0108.15).
A_INF (RKA)	Active Infeed with "Cooling system" function module (r0108.28).
A_INF (CBE)	Active Infeed with "CBE COMMUNICATION BOARD" function module (r0108.31).
B_INF	Basic Infeed closed-loop control Unregulated line infeed unit (without feedback) for rectifying the line voltage of the DC Link.
B_INF (Parallel)	Basic Infeed with "Parallel circuit" function module (r0108.15).
B_INF (RKA)	Basic Infeed with "Cooling system" function module (r0108.28).
B_INF (CBE)	Basic Infeed with "CBE COMMUNICATION BOARD" function module (r0108.31).
S_INF	Smart Infeed closed-loop control Unregulated line infeed/feedback unit for generating the DC link voltage.
S_INF (Parallel)	Smart Infeed with "Parallel circuit" function module (r0108.15).
S_INF (CBE)	Smart Infeed with "CBE COMMUNICATION BOARD" function module (r0108.31).
CU	Control Unit, (all variants).
CU (CAN)	Control Unit with "CAN" function module.
CU_S	Control Unit SINAMICS S (SINAMICS S120/S150).
CU_S (CAN)	Control Unit with "CAN" function module.
CU_CX32	Controller Extension for boosting the processing performance.
CU_LINK	Object for Controller Extension 32 (CX32).
CU_I	Control Unit SINAMICS Integrated (SIMOTION D4xx only).
SERVO	Servo Drive.
SERVO (Extended setp.)	Servo drive with "Extended setpoint channel" function module (r0108.8).
SERVO (Lin)	Servo drive with "Linear motor" function module (r0108.12).
SERVO (Safety rot)	Servo drive with "Safety rotary axis" function module (r0108.13).
SERVO (Extended brk)	Servo drive with "Extended brake control" function module (r0108.14).

© Siemens AG, 2005. All rights reserved

Table 1-1 Data in "Drive object (Function Module)" field, Continued

Drive object (Function Module)	Meaning
SERVO (Tech_ctrl)	Servo drive with "Technology controller" function module (r0108.16).
SERVO (Extended msg)	Servo drive with "Extended messages/monitoring" function module (r0108.17).
SERVO (RKA)	Servo drive with "Cooling system" function module (r0108.28).
SERVO(CAN)	Servo drive with "CAN" function module (r0108.29).
SERVO (CBE)	Servo drive with "CBE COMMUNICATION BOARD" function module (r0108.31).
TB30	Terminal Board 30.
TM15	Terminal Module 15 (SIMOTION D4xx only).
TM15DI/DO	Terminal Module 15 (for SINAMICS).
TM17	Terminal Module 17 (SIMOTION D4xx only).
TM31	Terminal Module 31.
TM41	Terminal Module 41.
VECTOR	VECTOR drive.
VECTOR (n/M)	VECTOR drive with "Closed-loop speed/torque control" function module (r0108.2).
VECTOR (Extended brk)	VECTOR drive with "Extended brake control" function module (r0108.14).
VECTOR (Parallel)	VECTOR drive with "Parallel circuit" function module (r0108.15).
VECTOR (Tech_ctrl)	VECTOR drive with "Technology controller" function module (r0108.16).
VECTOR (Extended msg)	VECTOR drive with "Extended messages/monitoring" function module (r0108.17).
VECTOR (RKA)	VECTOR drive with "Cooling system" function module (r0108.28).
VECTOR (CBE)	VECTOR drive with "CBE COMMUNICATION BOARD" function module (r0108.31).

Note:

References: /IH1/ SINAMICS S120 Installation and Start-Up Manual
"Drive Objects" section
"Function Modules" section

© Siemens AG, 2005. All rights reserved

Changeable in

The "-" sign indicates that the parameter can be changed in any object state and that the change will be effective immediately.

The letters"C1(x), C2(x), T, U" ((x): mean that the parameter can be changed only in the specified drive object state and that the change will not take effect until the object switches to another state. This can be one or more states.

The following states may be specified:

- C1(x) Device commissioning C1: **C**ommissioning **1**

  Converter commissioning is in progress (p0009>0).

  Pulses cannot be enabled.

  The parameter can only be changed in the following device commissioning settings (p0009 > 0):

  - C1: Changeable for all settings p0009 > 0.
  - C1(x): Only changeable when p0009 = x.

  A modified parameter value does not take effect until converter commissioning mode is exited with p0009 = 0.

- C2(x) Drive object commissioning C2: **C**ommissioning **2**

  Drive commissioning is in progress (p0009 = 0 and p0010 > 0).

  Pulses cannot be enabled.

  The parameter can only be changed in the following drive commissioning settings (p0010 > 0):

  - C2: Changeable for all settings p0010 > 0.
  - C2(x): Only changeable when p0010 = x.

  A modified parameter value does not take effect until drive commissioning mode is exited with p0010 = 0.

- U Operation U: R**u**n

  Pulses are enabled.

- T Ready T: Ready **t**o run

  The pulses are not enabled and status "C1(x)" or "C2(x)" is not active.

Note:

Parameter p0009 is CU-specific (belongs to Control Unit).

Parameter p0010 is drive-specific (belongs to each drive object).

The operating status of individual drive objects is displayed in r0002.

© Siemens AG, 2005. All rights reserved

Access level (refers only to access via Basic Operator Panel)

Specifies the access level required to be able to display and change the relevant parameter. The required access level can be set via p0003.

The system uses the following access levels:

1. Standard
2. Extended
3. Expert
4. Service
5. Macro (the parameter can only be changed via macro)

Note:

Parameter p0003 is CU-specific (belongs to Control Unit).

Data type

The possible data types of parameter values are as follows:

• I8	Integer8	8-bit integer
• I16	Integer16	16-bit integer
• I32	Integer32	32-bit integer
• U8	Unsigned8	8 bits without sign
• U16	Unsigned16	16 bits without sign
• U32	Unsigned32	32 bits without sign
• Float	FloatingPoint	Floating point number

Data set

Parameters which are dependent on a data set are identified as follows:

- CDS (command data set)

  Example:

  p1070[0] → main setpoint [command data set 0]

  p1070[1] → main setpoint [command data set 1], etc.
- DDS (drive data set)
- EDS (encoder data set)
- MDS (motor data set)
- PDS (Power Module data set)

© Siemens AG, 2005. All rights reserved

Note:

References: /IH1/ SINAMICS S120 Installation and Start-Up Manual "Data sets" section

Function diagram

The parameter is included in this function diagram. The structure of the parameter function and its interrelationship with other parameters is shown in the specified function diagram.

Example:

Function diagram: 3060.3	3060:	Function diagram number
	3:	Signal path (optional)

P group (refers only to access via BOP (Basic Operator Panel))

Specifies the functional group to which the parameter belongs. The required parameter group can be set via p0004.

Note:

Parameter p0004 is CU-specific (belongs to Control Unit).

Unit, unit group and unit choice

The following applies to parameters with a unit:

- Each of these parameters is assigned to a unit group.
- The relevant unit for the parameter is specified in square parenthesis.
- If the parameter unit can be set within the unit group, then the parameters required to do so are specified under "Unit choice".

Note:

References: /IH1/ SINAMICS S120 Installation and Start-Up Manual "Units" section

© Siemens AG, 2005. All rights reserved

Parameter values

Min	Minimum value of the parameter [unit]
Max	Maximum value of the parameter [unit]
Factory setting	Shipped value (default) [unit] A different value may be displayed for certain parameters (e.g.p1800) at the initial commissioning stage. Reason: The setting of these parameters is determined by the operating environment of the Control Unit (e.g.depending on converter type, macro, Power Module).

Note:

For SINAMICS G150/G130/S150, the macros and their settings are provided in the following documentation:

References: /BAx/ x = 1, 2, 3
SINAMICS G150/G130/S150 Operating Instructions

Description

Explanation of the function of a parameter.

Values

Lists the possible values of a parameter.

Recommendation

Information about recommended settings.

Index

The name and meaning of each individual index is specified for indexed parameters.

The following applies to the values (min, max, factory setting) of indexed setting parameters:

- Min, Max:

  The setting range and unit apply to all indices.

- Factory setting:

  When all indices have the same factory setting, index 0 is specified with unit to represent all indices.

  When the indices have different factory settings, they are all listed individually with unit.

© Siemens AG, 2005. All rights reserved

Bit field

For parameters with bit fields, the following information is provided about each bit:

- Bit number and signal name
- Meaning with signal states 0 and 1
- Function diagram (optional)

  The signal is shown on this function diagram.

Dependency

Conditions which need to be fulfilled in connection with this parameter. Also includes special effects which can occur between this parameter and others.

See also: List of other relevant parameters.

Safety Information

Important information which must be heeded to avoid the risk of physical injury or property damage.

Information which must be observed to avoid problems.

Information which the user or operator may find useful.

Danger!	Corresponds to		Danger
Warning!	Corresponds to		Warning
Caution!	Corresponds to		Caution
Caution:	Corresponds to		Caution
Notice	Corresponds to		Notice

Note:

A description of individual safety notices can be found in the appendix to this manual (see **Safety Information**).

© Siemens AG, 2005. All rights reserved

1.1.2 Numerical ranges of parameters

Parameters are grouped into the following numerical ranges:

Table 1-2 Numerical Ranges of Parameters

Range		Description
From	To	
0000	0099	Operation and visualization
0100	0199	Commissioning
0200	0299	Power Module
0300	0399	Motor
0400	0499	Encoder
0500	0599	Technology and units
0600	0699	Thermal motor protection and motor model, maximum current
0700	0799	Command sources and terminals on Control Unit, measuring sockets
0800	0839	CDS, DDS data sets (e.g. switch over, copy)
0840	0879	Sequential control (e.g. source for ON/OFF1)
0880	0899	Control and status words
0900	0999	PROFIBUS/PROFIdrive
1000	1199	Setpoint channel
1200	1299	Functions (e.g. motor holding brake)
1300	1399	V/f control
1400	1799	Closed-loop control
1800	1899	Gating unit
1900	1999	Power Module and motor identification
2000	2099	Communication (PROFIBUS)
2100	2199	Faults and alarms, monitoring functions
2200	2399	Technology controller
2900	2930	Fixed values (e.g. per cent, torque)
3400	3699	Infeed control (Active Line Module)
3900	3999	Management parameters
4000	4199	Terminal Boards, Terminal Modules (e.g. TB30, TM31)
4200	4399	Terminal Modules (e.g. TM15, TM17)
6500	6599	External reports
7000	7499	Parallel connection of Power Modules
7800	7899	EEPROM read/write parameters
8600	8799	CAN bus

© Siemens AG, 2005. All rights reserved

Table 1-2 Numerical Ranges of Parameters, Continued

Range		Description
From	**To**	
8800	8899	Communication Board
9400	9499	Parameter consistency and storage
9500	9899	Safety Integrated
9900	9949	Topology
9950	9999	Diagnostics (internal)

© Siemens AG, 2005. All rights reserved

1.2 List of parameters

Product: SINAMICS S, Version: 2302000, Label: ., Language: eng

r0002 Control Unit operating display / CU op_display

CU_S

Can be changed: -
Access level: 1
Data type: Integer16
Data set: -
Function diagram: -
P-Group: -
Units group: -
Unit selection: -

Min	Max	Factory setting
-	-	-

Description: Operating display for the Control Unit (CU).

Values:

0: [00] Operation
10: [10] Ready
20: [20] Wait for run-up
31: [31] Commissioning software download active
33: [33] Remove topology error / acknowledge
34: [34] Exit the commissioning mode
35: [35] Carry-out first commissioning
70: [70] Initialization
80: [80] Reset active
99: [99] Internal software error

r0002 Infeed operating display / INF op_display

A_INF, S_INF

Can be changed: -
Access level: 1
Data type: Integer16
Data set: -
Function diagram: -
P-Group: -
Units group: -
Unit selection: -

Min	Max	Factory setting
-	-	-

Description: Operating display for the infeed.

The value provides information about the actual operating state and the conditions necessary to reach the next operating state.

The higher the numerical value, the greater the number of conditions that still have to be fulfilled in order to achieve the "Run" operating state.

Values:

0: [00] Operation - everything enabled
21: [21] Operation - set "enable operation" = "1" (p0852)
31: [31] Rdy to power-up - pre-chrg running (p0857)
32: [32] Ready to power-up - set "ON/OFF1" = "0/1" (p0840)
41: [41] Power-on inhibit - set "ON/OFF1" = "0" (p0840)
42: [42] Power-on inhibit - set "OC/OFF2" = "1" (p0844, p0845)
44: [44] Power-on inhibit - connect 24 V to terminal EP (hardware)
45: [45] Power-on inhib - remove fault cause, acknowledge fault
46: [46] Power-on inhibit - exit comm mode (p0009, p0010)
60: [60] Infeed de-activated

Dependency: Refer to: r0046

Note: OC: Operating condition

EP: Enable Pulses (pulse enable)

COMM: Commissioning

© Siemens AG, 2005. All rights reserved

r0002 Drive operating display / Drv op_display

SERVO, VECTOR	**Can be changed:** -		**Access level:** 1
	Data type: Integer16	**Data set:** -	**Function diagram:** -
	P-Group: -	**Units group:** -	**Unit selection:** -
	Min	**Max**	**Factory setting**
	-	-	-

Description: Operating display for the drive.

The value provides information about the actual operating state and the conditions necessary to reach the next operating state.

The higher the numerical value, the greater the number of conditions that still have to be fulfilled in order to achieve the "Run" operating state.

Values:

0: [00] Operation - everything enabled
10: [10] Operation - set "enable setpoint" = "1" (p1142)
11: [11] Operation - set "enable speed controller" = "1" (p0856)
12: [12] Operation - RFG frozen, set "RFG start" = "1" (p1141)
13: [13] Operation - set "enable RFG" = "1" (p1140)
14: [14] Operation - MotID or excitation running and/or brake opens
15: [15] Operation - open brake (p1215)
16: [16] Oper - withdraw braking w/ OFF1 using "ON/OFF1" = "1"
17: [17] Oper - braking w/ OFF3 can only be interrupted w/ OFF2
18: [18] Operation - brake on fault, remove fault, acknowledge
21: [21] Operation - set "enable operation" = "1" (p0852)
22: [22] Ready - de-magnetization running (p0347)
23: [23] Ready - set "infeed operation" = "1" (p0864)
31: [31] Ready to power-up - set "ON/OFF1" = "0/1" (p0840)
41: [41] Power-on inhibit - set "ON/OFF1" = "0" (p0840)
42: [42] Power-on inhibit - set "OC/OFF2" = "1" (p0844, p0845)
43: [43] Power-on inhibit - set "OC/OFF3" = "1" (p0848, p0849)
44: [44] Power-on inhibit - connect 24 V to terminal EP (hardware)
45: [45] Power-on inhib - remove fault cause, acknowledge fault
46: [46] Power-on inhibit - exit comm mode (p0009, p0010)
60: [60] Drive object de-activated

Dependency: Refer to: r0046

Note: OC: Operating condition

EP: Enable Pulses (pulse enable)

RFG: Ramp-function generator

COMM: Commissioning

MotID: Motor data identification routine

© Siemens AG, 2005. All rights reserved

r0002 Infeed operating display / INF op_display

B_INF

Can be changed: -
Access level: 1
Data type: Integer16
Data set: -
Function diagram: -
P-Group: -
Units group: -
Unit selection: -

Min	Max	Factory setting
-	-	-

Description: Operating display for the infeed.

The value provides information about the actual operating state and the conditions necessary to reach the next operating state.

The higher the numerical value, the greater the number of conditions that still have to be fulfilled in order to achieve the "Run" operating state.

Values:

0: [00] Operation - everything enabled
31: [31] Rdy to power-up - pre-chrg running (p0857)
32: [32] Ready to power-up - set "ON/OFF1" = "0/1" (p0840)
41: [41] Power-on inhibit - set "ON/OFF1" = "0" (p0840)
42: [42] Power-on inhibit - set "OC/OFF2" = "1" (p0844, p0845)
44: [44] Power-on inhibit - connect 24 V to terminal EP (hardware)
45: [45] Power-on inhib - remove fault cause, acknowledge fault
46: [46] Power-on inhibit - exit comm mode (p0009, p0010)
60: [60] Infeed de-activated

Dependency: Refer to: r0046

Note: OC: Operating condition

COMM: Commissioning

r0002 TB30 operating display / TB30 op_display

TB30

Can be changed: -
Access level: 1
Data type: Integer16
Data set: -
Function diagram: -
P-Group: -
Units group: -
Unit selection: -

Min	Max	Factory setting
-	-	-

Description: Operating display for terminal board 30 (TB30).

The higher the numerical value, the greater the number of conditions that still have to be fulfilled in order to achieve the "Module in cyclic operation" operating state.

Values:

0: [00] Module in cyclic operation
40: [40] Module not in cyclic operation
60: [60] Fault
70: [70] Initialization
80: [80] Reset active
120: [120] Module de-activated

© Siemens AG, 2005. All rights reserved

r0002 TM31 operating display / TM31 op_display

TM31	**Can be changed:** -		**Access level:** 1
	Data type: Integer16	**Data set:** -	**Function diagram:** -
	P-Group: -	**Units group:** -	**Unit selection:** -
	Min	**Max**	**Factory setting**
	-	-	-

Description: Operating display for Terminal Module 31 (TM31).

The higher the numerical value, the greater the number of conditions that still have to be fulfilled in order to achieve the "Module in cyclic operation" operating state.

Values:

0: [00] Module in cyclic operation
40: [40] Module not in cyclic operation
50: [50] Alarm
60: [60] Fault
70: [70] Initialization
120: [120] Module de-activated

r0002 TM41 operating display / TM41 op_display

TM41	**Can be changed:** -		**Access level:** 1
	Data type: Integer16	**Data set:** -	**Function diagram:** -
	P-Group: -	**Units group:** -	**Unit selection:** -
	Min	**Max**	**Factory setting**
	-	-	-

Description: Operating display for Terminal Module 41 (TM41).

The value provides information about the actual operating state and the conditions necessary to reach the next operating state.

The higher the numerical value, the greater the number of conditions that still have to be fulfilled in order to achieve the "Run" operating state.

Values:

0: [00] Operation - everything enabled
10: [10] Operation - set "enable setpoint" = "1" (p1142)
12: [12] Operation - RFG frozen, set "RFG start" = "1" (p1141)
13: [13] Operation - set "enable RFG" = "1" (p1140)
18: [18] Operation - brake on fault, remove fault, acknowledge
21: [21] Operation - set "enable operation" = "1" (p0852)
31: [31] Ready to power-up - set "ON/OFF1" = "0/1" (p0840)
41: [41] Power-on inhibit - set "ON/OFF1" = "1/0" (p0840)
42: [42] Power-on inhibit - set "OC/OFF2" = "1" (p0844)
43: [43] Power-on inhibit - set "OC/OFF3" = "1" (p0848)
45: [45] Power-on inhib - remove fault cause, acknowledge fault
46: [46] Power-on inhibit - exit comm mode (p0009, p0010)
120: [120] Module de-activated

Note: OC: Operating condition

RFG: Ramp-function generator

COMM: Commissioning

© Siemens AG, 2005. All rights reserved

r0002 TM17 operating display / TM17 op_display

TM17

Can be changed: -
Access level: 1
Data type: Integer16
Data set: -
Function diagram: -
P-Group: -
Units group: -
Unit selection: -

Min	Max	Factory setting
-	-	-

Description: Operating display for Terminal Module 17 (TM17).

The higher the numerical value, the greater the number of conditions that still have to be fulfilled in order to achieve the "Module in cyclic operation" operating state.

Values:
0: [00] Module in cyclic operation
40: [40] Module not in cyclic operation
50: [50] Alarm
60: [60] Fault
70: [70] Initialization
120: [120] Module de-activated

r0002 TM15 operating display / TM15 op_display

TM15

Can be changed: -
Access level: 1
Data type: Integer16
Data set: -
Function diagram: -
P-Group: -
Units group: -
Unit selection: -

Min	Max	Factory setting
-	-	-

Description: Operating display for Terminal Module 15 (TM15).

The higher the numerical value, the greater the number of conditions that still have to be fulfilled in order to achieve the "Module in cyclic operation" operating state.

Values:
0: [00] Module in cyclic operation
40: [40] Module not in cyclic operation
50: [50] Alarm
60: [60] Fault
70: [70] Initialization
120: [120] Module de-activated

r0002 TM15DI/DO operating display / TM15D op_display

TM15DI/DO

Can be changed: -
Access level: 1
Data type: Integer16
Data set: -
Function diagram: -
P-Group: -
Units group: -
Unit selection: -

Min	Max	Factory setting
-	-	-

Description: Operating display for Terminal Module 15 (TM15).

The higher the numerical value, the greater the number of conditions that still have to be fulfilled in order to achieve the "Module in cyclic operation" operating state.

Values:
0: [00] Module in cyclic operation
40: [40] Module not in cyclic operation
50: [50] Alarm
60: [60] Fault
70: [70] Initialization
120: [120] Module de-activated

© Siemens AG, 2005. All rights reserved

p0003 BOP access level / BOP access level

CU_S	**Can be changed:** C1, U, T		**Access level:** 1
	Data type: Integer16	**Data set:** -	**Function diagram:** -
	P-Group: -	**Units group:** -	**Unit selection:** -
	Min	**Max**	**Factory setting**
	1	4	1

Description: Sets the access level for reading (and writing) parameters via BOP20 and AOP.

Values:
1: Standard
2: Extended
3: Expert
4: Service

Note:
Access stage 1 (standard):
Parameters for the simplest operator control possibility (e.g. p1120 = ramp-function generator, ramp-up time).
Access stage 2 (extended):
Parameters to operate the basic functions of the drive unit.
Access stage 3 (experts):
Expert know-how is required for these parameters (e.g. BICO parameterization).
Access stage 4 (service):
For these parameters, it is necessary that authorized service personnel enter the appropriate password (p3950).

p0004 BOP parameter menu / BOP par_menu

CU_S	**Can be changed:** C2(1), T		**Access level:** 1
	Data type: Integer16	**Data set:** -	**Function diagram:** -
	P-Group: -	**Units group:** -	**Unit selection:** -
	Min	**Max**	**Factory setting**
	0	99	1

Description: Display filter for BOP20 and AOP for selecting parameters using menu prompting.

Values:
0: All parameters
1: Displays, signals
2: Power module
3: Motor
4: Encoder/position encoder
5: Technology, units
7: Digital inputs/outputs, commands, sequence control
8: Analog inputs/outputs, terminal strip
10: Setpoint channel/ramp-fct generator
12: Functions
13: V/f control
14: Control
15: Data sets
18: Gating unit, modulator
19: Motor identification, power module test
20: Communication
21: Faults, alarms, monitoring functions
25: Cl.-loop pos ctrl
28: Free function blocks
47: Trace and function generator
50: OEM parameter
90: Topology
95: Safety Integrated
98: Command Data Set (CDS)
99: Drive Data Set (DDS)

© Siemens AG, 2005. All rights reserved

p0007 Backlighting display delay time / Display t_del

CU_S	**Can be changed:** U, T		**Access level:** 3
	Data type: Unsigned32	**Data set:** -	**Function diagram:** -
	P-Group: -	**Units group:** -	**Unit selection:** -
	Min	**Max**	**Factory setting**
	0	2	0

Description: Sets the delay time to switch-out background lighting.
If no keys are actuated, then the background lighting automatically switches itself off after this time has expired.

Note: p0007 = 0: Background lighting is always switched on (factory setting).

p0009 Device commissioning parameter filter / Dev comm par_filt

CU_S	**Can be changed:** C1, T		**Access level:** 1
	Data type: Integer16	**Data set:** -	**Function diagram:** -
	P-Group: -	**Units group:** -	**Unit selection:** -
	Min	**Max**	**Factory setting**
	0	30	1

Description: Sets the device and basic drive commissioning.
By appropriately setting this parameter, those parameters are filtered that can be written into in the various commissioning steps.

Values:
0: Ready
1: Device configuration
2: Definition drive type (in preparation)
3: Drive basis configuration
4: Data set basis configuration
29: Device download
30: Parameter reset

Note: The drives can only be powered-up outside the device commissioning (the inverter enabled). In this case, p0009 must be 0 (Ready) and the individual drive objects must have already gone into operation (p0010).

p0009 = 1: Device configuration

At the first commissioning of the devices, after run-up, the device is in the "device configuration" state. To start the internal automatic first commissioning of the drive unit, p0009 should be set to 0 (Ready) after the ID for the actual topology (r0098) was transferred into the ID for the target topology (p0099). To do this, it is sufficient to set a single index value of p0099[x] the same as r0098[x]. Before the device has been completely commissioned, no other parameter can be changed. After the first commissioning was carried-out, in this state, when required, other basic device configuration parameters can be adapted (e.g. the basic clock cycle in p0110).

p0009 = 3: Drive basis configuration

In this state, after the device has been commissioned for the first time, basic changes can be made for the individual drive objects (e.g. sampling rates p0111, p0112, p0115 and the number of data sets p0120, p0130, p0140, p0170, p0180).

p0009 = 4: Data set basis configuration

In this state, after the device has been commissioned for the first time, for the individual drive objects changes can be made regarding the assignment of the components (p0121, p0131, p0141, p0151, p0161) to the individual data sets and the assignment of the power module, motor and encoder to the drive data sets (p0185, and onwards).

p0009 = 29: Device download

If a download is made using the commissioning software, the device is automatically brought into this state. After the download has been completed, p0009 is automatically set to 0 (ready). It is not possible to manually set p0009 to this value.

p0009 = 30: Parameter reset

In order to bring the complete unit into the "first commissioning" state or to load the parameters saved using p0977, to start, p0009 must be set to this value. p0976 can then be changed to the required value.

© Siemens AG, 2005. All rights reserved

p0010 Infeed commissioning parameter filter / INF comm par_filt

A_INF, B_INF, S_INF

Can be changed: C2(1), T		**Access level:** 1
Data type: Integer16	**Data set:** -	**Function diagram:** -
P-Group: -	**Units group:** -	**Unit selection:** -
Min	**Max**	**Factory setting**
0	30	1

Description: Sets the parameter filter to commission an infeed unit.

Setting this parameter filters-out the parameters that can be written into in the various commissioning steps.

Values:
0: Ready
1: Quick commissioning
2: Power module commissioning
29: Download
30: Parameter reset

Note: The drive can only be powered-up outside the drive commissioning (inverter enable). To realize this, this parameter must be set to 0.

For p3900 not equal to 0, at the end of the quick commissioning, this parameter is automatically reset to 0.

Procedure for "parameter reset": Set p0010 = 30 and p0970 = 1.

p0010 Drive, commissioning parameter filter / Drv comm. par_filt

SERVO, VECTOR

Can be changed: C2(1), T		**Access level:** 1
Data type: Integer16	**Data set:** -	**Function diagram:** -
P-Group: -	**Units group:** -	**Unit selection:** -
Min	**Max**	**Factory setting**
0	95	1

Description: Sets the parameter filter to commission a drive.

Setting this parameter filters-out the parameters that can be written into in the various commissioning steps.

Values:
0: Ready
1: Quick commissioning
2: Power module commissioning
3: Motor commissioning
4: Encoder commissioning
5: Technological application/units
15: Data sets
29: Download
30: Parameter reset
95: Safety Integrated commissioning

Note: The drive can only be powered-up outside the drive commissioning (inverter enable). To realize this, this parameter must be set to 0.

For p3900 not equal to 0, at the end of the quick commissioning, this parameter is automatically reset to 0.

Procedure for "parameter reset": Set p0010 = 30 and p0970 = 1.

© Siemens AG, 2005. All rights reserved

p0010 TB30 commissioning parameter filter / TB30 comm.par_filt

TB30

Can be changed: C2(1), T		**Access level:** 1
Data type: Integer16	**Data set:** -	**Function diagram:** -
P-Group: -	**Units group:** -	**Unit selection:** -
Min	**Max**	**Factory setting**
0	30	0

Description: Sets the parameter filter for commissioning a terminal board 30 (TB30).
Setting this parameter filters-out the parameters that can be written into in the various commissioning steps.
For the BOP, this setting also causes the read access operations to be filtered.

Values:
0: Ready
29: Download
30: Parameter reset

Dependency: Refer to: p0970

Note: Procedure for "parameter reset": Set p0010 = 30 and p0970 = 1.

p0010 TM31 commissioning parameter filter / TM31 comm par_filt

TM31

Can be changed: C2(1), T		**Access level:** 1
Data type: Integer16	**Data set:** -	**Function diagram:** -
P-Group: -	**Units group:** -	**Unit selection:** -
Min	**Max**	**Factory setting**
0	30	0

Description: Sets the parameter filter for commissioning a Terminal Module 31 (TM31).
Setting this parameter filters-out the parameters that can be written into in the various commissioning steps.
For the BOP, this setting also causes the read access operations to be filtered.

Values:
0: Ready
29: Download
30: Parameter reset

Dependency: Refer to: p0970

Note: Only the following values are possible: p0010 = 0, 30
Procedure for "parameter reset": Set p0010 = 30 and p0970 = 1.

p0010 TM41 commissioning parameter filter / TM41 comm par_filt

TM41

Can be changed: C2(1), T		**Access level:** 1
Data type: Integer16	**Data set:** -	**Function diagram:** -
P-Group: -	**Units group:** -	**Unit selection:** -
Min	**Max**	**Factory setting**
0	30	0

Description: Sets the parameter filter for commissioning a Terminal Module 41 (TM41).
Setting this parameter filters-out the parameters that can be written into in the various commissioning steps.
For the BOP, this setting also causes the read access operations to be filtered.

Values:
0: Ready
4: Encoder commissioning
29: Download
30: Parameter reset

Dependency: Refer to: p0970

Note: Procedure for "parameter reset": Set p0010 = 30 and p0970 = 1.

© Siemens AG, 2005. All rights reserved

p0010 TM17 commissioning parameter filter / TM17 comm par_filt

TM17

Can be changed: C2(1), T — **Access level:** 1

Data type: Integer16	**Data set:** -	**Function diagram:** -
P-Group: -	**Units group:** -	**Unit selection:** -
Min	**Max**	**Factory setting**
0	30	0

Description: Sets the parameter filter for commissioning a Terminal Module 17 (TM17).
Setting this parameter filters-out the parameters that can be written into in the various commissioning steps.
For the BOP, this setting also causes the read access operations to be filtered.

Values:
0: Ready
29: Download
30: Parameter reset

Dependency: Refer to: p0970

Note: Only the following values are possible: p0010 = 0, 30
Procedure for "parameter reset": Set p0010 = 30 and p0970 = 1.

p0010 TM15 commissioning parameter filter / TM15 comm par_filt

TM15

Can be changed: C2(1), T — **Access level:** 1

Data type: Integer16	**Data set:** -	**Function diagram:** -
P-Group: -	**Units group:** -	**Unit selection:** -
Min	**Max**	**Factory setting**
0	30	0

Description: Sets the parameter filter for commissioning a Terminal Module 15 (TM15).
Setting this parameter filters-out the parameters that can be written into in the various commissioning steps.
For the BOP, this setting also causes the read access operations to be filtered.

Values:
0: Ready
29: Download
30: Parameter reset

Dependency: Refer to: p0970

Note: Only the following values are possible: p0010 = 0, 30
Procedure for "parameter reset": Set p0010 = 30 and p0970 = 1.

p0010 TM15DI/DO commissioning the parameterizing filter / TM15D com par_filt

TM15DI/DO

Can be changed: C2(1), T — **Access level:** 1

Data type: Integer16	**Data set:** -	**Function diagram:** -
P-Group: -	**Units group:** -	**Unit selection:** -
Min	**Max**	**Factory setting**
0	30	0

Description: Sets the parameter filter for commissioning a Terminal Module 15 (TM15).
Setting this parameter filters-out the parameters that can be written into in the various commissioning steps.
For the BOP, this setting also causes the read access operations to be filtered.

Values:
0: Ready
29: Download
30: Parameter reset

Dependency: Refer to: p0970

Note: Only the following values are possible: p0010 = 0, 30
Procedure for "parameter reset": Set p0010 = 30 and p0970 = 1.

© Siemens AG, 2005. All rights reserved

p0015 Macro drive unit / Macro drv unit

CU_S	**Can be changed:** C1		**Access level:** 1
	Data type: Unsigned32	**Data set:** -	**Function diagram:** -
	P-Group: -	**Units group:** -	**Unit selection:** -
	Min	**Max**	**Factory setting**
	0	999999	0

Description: Runs the appropriate ACX file on the CompactFlash card.
The selected ACX file must be located in the following directory:
... /PMACROS/DEVICE/P15/PMxxxxxx.ACX
Example:
p0015 = 6 --> the file PM000006.ACX is run.

Dependency: The ACX file to be run must be created according to the definition for ACX macros and must be saved in the directory intended on the CompactFlash card.
Refer to: p0015, p0700, p1000, p1500, r8570

Note: The macros in the specified directory are displayed in r8570.
Macros available as standard are described in the technical documentation of the particular product.

p0015 Macro drive object / Macro DO

A_INF, B_INF, SERVO, S_INF, TM15DI/DO, TM31, VECTOR	**Can be changed:** C2(1)		**Access level:** 1
	Data type: Unsigned32	**Data set:** -	**Function diagram:** -
	P-Group: Commands	**Units group:** -	**Unit selection:** -
	Min	**Max**	**Factory setting**
	0	999999	0

Description: Runs the appropriate ACX file on the CompactFlash card.
The selected ACX file must be located in the following directory:
... /PMACROS/<drive object>/P15/PMxxxxxx.ACX
Example:
p0015 = 6 --> the file PM000006.ACX is run.

Dependency: The ACX file to be run must be created according to the definition for ACX macros and must be saved in the directory intended on the CompactFlash card.
Refer to: p0700, p1000, p1500, r8570

Notice: No errors were issued during fast commissioning (p3900 = 1) when writing to parameters of the QUICK_IBN group!

Note: The macros in the specified directory are displayed in r8570.
Macros available as standard are described in the technical documentation of the particular product.

r0018 Control Unit firmware version / CU FW_version

CU_S	**Can be changed:** -		**Access level:** 1
	Data type: Unsigned32	**Data set:** -	**Function diagram:** -
	P-Group: -	**Units group:** -	**Unit selection:** -
	Min	**Max**	**Factory setting**
	-	-	-

Description: Displays the firmware version of the Control Unit.

Dependency: Refer to: r0128, r0148, r0158, r0197, r0198

Note: Example:
The value 1010100 should be interpreted as V01.01.01.00.

© Siemens AG, 2005. All rights reserved

r0020 Speed setpoint, smoothed / n_set smth

SERVO, VECTOR	**Can be changed:** -		**Access level:** 2
	Data type: Floating Point	**Data set:** -	**Function diagram:** 5020, 6799
	P-Group: Displays, signals	**Units group:** SPEED_ROT	**Unit selection:** -
	Min	**Max**	**Factory setting**
	- [1/min]	- [1/min]	- [1/min]

Description: Displays the actual smoothed speed/velocity setpoint at the input of the speed/velocity controller or V/f characteristic (after the interpolator).

Dependency: Refer to: r0060

Note: Smoothing time constant = 100 ms

The signal is not suitable as process quantity and may only be used as display quantity.

The speed setpoint is available smoothed (r0020) and unsmoothed (r0060).

r0020 Velocity setpoint, smoothed / n_set smth

SERVO (Lin)	**Can be changed:** -		**Access level:** 2
	Data type: Floating Point	**Data set:** -	**Function diagram:** 5020, 6799
	P-Group: Displays, signals	**Units group:** SPEED_LIN_METRIC_P3	**Unit selection:** -
	Min	**Max**	**Factory setting**
	- [m/min]	- [m/min]	- [m/min]

Description: Displays the actual smoothed speed/velocity setpoint at the input of the speed/velocity controller or V/f characteristic (after the interpolator).

Dependency: Refer to: r0060

Note: Smoothing time constant = 100 ms

The signal is not suitable as process quantity and may only be used as display quantity.

The speed setpoint is available smoothed (r0020) and unsmoothed (r0060).

r0021 Actual speed, smoothed / n_act smooth

SERVO, VECTOR	**Can be changed:** -		**Access level:** 2
	Data type: Floating Point	**Data set:** -	**Function diagram:** 1580, 1680, 4710, 6799
	P-Group: Displays, signals	**Units group:** SPEED_ROT	**Unit selection:** -
	Min	**Max**	**Factory setting**
	- [1/min]	- [1/min]	- [1/min]

Description: Displays the smooth actual value of the motor speed/velocity.

Dependency: Refer to: r0063

Note: Smoothing time constant = 100 ms

The signal is not suitable as process quantity and may only be used as display quantity.

The value displayed in r0021 is the smoothed value of r0063.

© Siemens AG, 2005. All rights reserved

r0021 Actual velocity, smoothed / n_act smooth

SERVO (Lin)

Can be changed: -		**Access level:** 2
Data type: Floating Point	**Data set:** -	**Function diagram:** 1580, 1680, 4710, 6799
P-Group: Displays, signals	**Units group:** SPEED_LIN_METRIC_P3	**Unit selection:** -
Min	**Max**	**Factory setting**
- [m/min]	- [m/min]	- [m/min]

Description: Displays the smooth actual value of the motor speed/velocity.

Dependency: Refer to: r0063

Note: Smoothing time constant = 100 ms

The signal is not suitable as process quantity and may only be used as display quantity.

The value displayed in r0021 is the smoothed value of r0063.

r0024 Infeed line frequency smoothed / INF f_line smth

A_INF, S_INF

Can be changed: -		**Access level:** 3
Data type: Floating Point	**Data set:** -	**Function diagram:** 8850, 8950
P-Group: Displays, signals	**Units group:** FREQUENCY	**Unit selection:** -
Min	**Max**	**Factory setting**
- [Hz]	- [Hz]	- [Hz]

Description: Displays the smoothed line supply frequency.

Dependency: Refer to: r0066

Note: Smoothing time constant = 300 ms

The signal is not suitable as process quantity and may only be used as display quantity.

The line frequency is available smoothed (r0024) and unsmoothed (r0066).

A positive sign of the frequency is obtained when the line supply phases U, V and W are connected with the correct phase sequence.

A negative sign of the frequency is obtained when the 3 line phases are interchanged therefore designating a negative direction of the rotating field of the 3-phase line supply voltage.

r0024 Drive output frequency smoothed / Drv f_outp smooth

SERVO, VECTOR

Can be changed: -		**Access level:** 3
Data type: Floating Point	**Data set:** -	**Function diagram:** 1690, 5300, 5730, 6799
P-Group: Displays, signals	**Units group:** FREQUENCY	**Unit selection:** -
Min	**Max**	**Factory setting**
- [Hz]	- [Hz]	- [Hz]

Description: Displays the smoothed converter frequency.

Dependency: Refer to: r0066

Note: Smoothing time constant = 100 ms

The signal is not suitable as process quantity and may only be used as display quantity.

The output frequency is available smoothed (r0024) and unsmoothed (r0066).

© Siemens AG, 2005. All rights reserved

r0025 Infeed input voltage, smoothed / INF U_input smooth

A_INF, S_INF

Can be changed: -		**Access level:** 2
Data type: Floating Point	**Data set:** -	**Function diagram:** 8850, 8950
P-Group: Displays, signals	**Units group:** VOLTAGE_AC_EFF	**Unit selection:** -
Min	**Max**	**Factory setting**
- [Veff]	- [Veff]	- [Veff]

Description: Displays the smoothed actual value of the input voltage.
This voltage is present at the line supply connection of the infeed.

Dependency: Refer to: r0072

Note: Smoothing time constant = 300 ms
The signal is not suitable as process quantity and may only be used as display quantity.
The input voltage is available smoothed (r0025) and unsmoothed (r0072).

r0025 Drive, output voltage smoothed / Drv U_outp smooth

SERVO, VECTOR

Can be changed: -		**Access level:** 2
Data type: Floating Point	**Data set:** -	**Function diagram:** 1690, 5730, 6799
P-Group: Displays, signals	**Units group:** VOLTAGE_AC_EFF	**Unit selection:** -
Min	**Max**	**Factory setting**
- [Veff]	- [Veff]	- [Veff]

Description: Displays the smoothed output voltage of the power module.

Dependency: Refer to: r0072

Note: Smoothing time constant = 100 ms
The signal is not suitable as process quantity and may only be used as display quantity.
The output voltage is available smoothed (r0025) and unsmoothed (r0072).

r0026 DC link voltage, smoothed / Vdc smooth

A_INF, B_INF, SERVO, S_INF, VECTOR

Can be changed: -		**Access level:** 2
Data type: Floating Point	**Data set:** -	**Function diagram:** 5730, 6799, 8750, 8850, 8950
P-Group: Displays, signals	**Units group:** VOLTAGE_DC	**Unit selection:** -
Min	**Max**	**Factory setting**
- [V]	- [V]	- [V]

Description: Displays the smoothed actual value of the DC link voltage.

Dependency: Refer to: r0070

Note: A_INF, B_INF, S_INF: Smoothing time constant = 300 ms
SERVO, VECTOR: Smoothing time constant = 100 ms
The signal is not suitable as process quantity and may only be used as display quantity.
The DC link voltage is available smoothed (r0026) and unsmoothed (r0070).

© Siemens AG, 2005. All rights reserved

r0027 Absolute actual current, smoothed / I_act abs.val.smth

A_INF, SERVO, S_INF, VECTOR

Can be changed: -		**Access level:** 2
Data type: Floating Point	**Data set:** -	**Function diagram:** 5730, 6799, 8850, 8950
P-Group: Displays, signals	**Units group:** CURRENT_AC_EFF	**Unit selection:** -
Min	**Max**	**Factory setting**
- [Aeff]	- [Aeff]	- [Aeff]

Description: Displays the smoothed absolute actual current value.

Dependency: Refer to: r0068

Note: A_INF, S_INF, VECTOR: Smoothing time constant = 300 ms
SERVO: Smoothing time constant = 100 ms
The signal is not suitable as process quantity and may only be used as display quantity.
The absolute current actual value is available smoothed (r0027) and unsmoothed (r0068).

r0028 Modulation depth, smoothed / Modulat depth smth

A_INF, SERVO, VECTOR

Can be changed: -		**Access level:** 3
Data type: Floating Point	**Data set:** -	**Function diagram:** 5730, 6799, 8950
P-Group: Displays, signals	**Units group:** PERCENT	**Unit selection:** -
Min	**Max**	**Factory setting**
- [%]	- [%]	- [%]

Description: Displays the smoothed actual value of the modulation depth.

Dependency: Refer to: r0074

Note: A_INF: Smoothing time constant = 300 ms
SERVO, VECTOR: Smoothing time constant = 100 ms
The signal is not suitable as process quantity and may only be used as display quantity.
The modulation depth is available smoothed (r0028) and unsmoothed (r0074).

r0029 Infeed, smoothed reactive current actual value / INF I_reactiv smth

A_INF, S_INF

Can be changed: -		**Access level:** 3
Data type: Floating Point	**Data set:** -	**Function diagram:** 8850, 8950
P-Group: Displays, signals	**Units group:** CURRENT_AC_EFF	**Unit selection:** -
Min	**Max**	**Factory setting**
- [Aeff]	- [Aeff]	- [Aeff]

Description: Displays the smoothed actual value of the reactive current component.

Note: Smoothing time constant = 300 ms
The signal is not suitable as process quantity and may only be used as display quantity.
The reactive current actual value is available smoothed (r0029) and unsmoothed (r0076).

© Siemens AG, 2005. All rights reserved

r0029 Drive, smoothed field-generating current actual value / Drv Id_act smooth

SERVO, VECTOR	**Can be changed:** -		**Access level:** 3
	Data type: Floating Point	**Data set:** -	**Function diagram:** 5730, 6799
	P-Group: Displays, signals	**Units group:** CURRENT_AC_EFF	**Unit selection:** -
	Min	**Max**	**Factory setting**
	- [Aeff]	- [Aeff]	- [Aeff]

Description: Displays the smoothed field-generating actual current.
Dependency: Refer to: r0076
Note: SERVO: Smoothing time constant = 100 ms
VECTOR: Smoothing time constant = 300 ms
The signal is not suitable as process quantity and may only be used as display quantity.
The field-generating current actual value is available smoothed (r0029) and unsmoothed (r0076).

r0030 Active current actual value, smoothed / I_active smooth

A_INF, S_INF	**Can be changed:** -		**Access level:** 3
	Data type: Floating Point	**Data set:** -	**Function diagram:** 8850, 8950
	P-Group: Displays, signals	**Units group:** CURRENT_AC_EFF	**Unit selection:** -
	Min	**Max**	**Factory setting**
	- [Aeff]	- [Aeff]	- [Aeff]

Description: Displays the smoothed actual value of the active current components.
Dependency: Refer to: r0078
Note: Smoothing time constant = 300 ms
The signal is not suitable as process quantity and may only be used as display quantity.
The active current actual value is available smoothed (r0030) and unsmoothed (r0078).

r0030 Current actual value, torque-generating, smoothed / Iq_act smooth

SERVO, VECTOR	**Can be changed:** -		**Access level:** 3
	Data type: Floating Point	**Data set:** -	**Function diagram:** 5730, 6799
	P-Group: Displays, signals	**Units group:** CURRENT_AC_EFF	**Unit selection:** -
	Min	**Max**	**Factory setting**
	- [Aeff]	- [Aeff]	- [Aeff]

Description: Displays the smoothed torque-generating actual current.
Dependency: Refer to: r0078
Note: SERVO: Smoothing time constant = 100 ms
VECTOR: Smoothing time constant = 300 ms
The signal is not suitable as process quantity and may only be used as display quantity.
The following applies for SERVO:
The torque-generating current actual value is available smoothed (r0030 with 100 ms, r0078[1] with p0045) and unsmoothed (r0078[0]).
For VECTOR, the following applies:
The torque-generating current actual value is available smoothed (r0030 with 300 ms) and unsmoothed (r0078).

© Siemens AG, 2005. All rights reserved

r0031 Actual torque smoothed / M_act smooth

SERVO, VECTOR

Can be changed: -		**Access level:** 2
Data type: Floating Point	**Data set:** -	**Function diagram:** 5730, 6799
P-Group: Displays, signals	**Units group:** TORQUE	**Unit selection:** -
Min	**Max**	**Factory setting**
- [Nm]	- [Nm]	- [Nm]

Description: Displays the smoothed torque/force actual value.
Dependency: Refer to: r0080
Note: Smoothing time constant = 100 ms
The signal is not suitable as process quantity and may only be used as display quantity.
The active current actual value is available smoothed (r0031) and unsmoothed (r0080).

r0031 Force actual value, smoothed / M_act smooth

SERVO (Lin)

Can be changed: -		**Access level:** 2
Data type: Floating Point	**Data set:** -	**Function diagram:** 5730, 6799
P-Group: Displays, signals	**Units group:** FORCE	**Unit selection:** -
Min	**Max**	**Factory setting**
- [N]	- [N]	- [N]

Description: Displays the smoothed torque/force actual value.
Dependency: Refer to: r0080
Note: Smoothing time constant = 100 ms
The signal is not suitable as process quantity and may only be used as display quantity.
The active current actual value is available smoothed (r0031) and unsmoothed (r0080).

r0032 Power factor, smoothed / Power factor smth

A_INF, SERVO, S_INF, VECTOR

Can be changed: -		**Access level:** 2
Data type: Floating Point	**Data set:** -	**Function diagram:** 5730, 6799, 8850, 8950
P-Group: Displays, signals	**Units group:** POWER_P3	**Unit selection:** -
Min	**Max**	**Factory setting**
- [kW]	- [kW]	- [kW]

Description: Displays the smoothed actual value of the active power.
Dependency: Refer to: r0082
Note: Significance for the drive: Power output at the motor shaft
Significance for the infeed: Power consumed
For A_INF and S_INF the following applies:
The active power is available smoothed (r0032 with 300 ms) and unsmoothed (r0082).
The following applies for SERVO:
The active power is available smoothed (r0032 with 100 ms, r0082[1] with p0045) and unsmoothed (r0082[0]).
For VECTOR and VECTORMV, the following applies:
The active power is available smoothed (r0032 with 100 ms) and unsmoothed (r0082).

© Siemens AG, 2005. All rights reserved

r0033 Torque utilization, smoothed / M_util smooth

SERVO, VECTOR	**Can be changed:** -		**Access level:** 3
	Data type: Floating Point	**Data set:** -	**Function diagram:** 8012
	P-Group: Displays, signals	**Units group:** PERCENT	**Unit selection:** -
	Min	**Max**	**Factory setting**
	- [%]	- [%]	- [%]

Description: Displays the smoothed torque/force utilization as a percentage.
The torque/force utilization is obtained from the required smoothed torque/force referred to the torque/force limit.

Note: Smoothing time constant = 100 ms
The signal is not suitable as process quantity and may only be used as display quantity.
The torque utilization is available smoothed (r0033) and unsmoothed (r0081).
For M_set total (r0079) > M_max offset (p1532), the following applies:
- demanded torque = M_set total - M_max offset
- actual torque limit = M_max upper effective (r1538) - M_max offset
For M_set total (r0079) <= M_max offset (p1532), the following applies:
- demanded torque = M_max offset - M_set total
- actual torque limit = M_max offset - M_max lower effective (r1539)
For the actual torque limit = 0, the following applies: r0033 = 100 %
For the actual torque limit < 0, the following applies: r0033 = 0 %

r0035 CO: Motor temperature / Motor temperature

SERVO, VECTOR	**Can be changed:** -		**Access level:** 2
	Data type: Floating Point	**Data set:** -	**Function diagram:** 8016
	P-Group: Displays, signals	**Units group:** TEMPERATURE	**Unit selection:** -
	Min	**Max**	**Factory setting**
	- [°C]	- [°C]	- [°C]

Description: Displays the actual temperature in the motor.

Note: For induction motors, the following applies:
If neither a temperature sensor nor a PTC thermistor are connected, the temperature of the thermal motor model is displayed (r0632).
For synchronous motors, the following applies:
If neither a temperature sensor nor a PTC thermistor is connected, value -200 is output.

r0036 Power module overload I2t / PM overload I2t

A_INF, SERVO, S_INF, VECTOR	**Can be changed:** -		**Access level:** 3
	Data type: Floating Point	**Data set:** -	**Function diagram:** 8014
	P-Group: Displays, signals	**Units group:** PERCENT	**Unit selection:** -
	Min	**Max**	**Factory setting**
	- [%]	- [%]	- [%]

Description: Displays the power module overload determined using the I2t calculation.
A current reference value is defined for the I2t monitoring of the power module. It represents the current that can be conducted by the power module without any influence of the switching losses (e.g. the continuously permissible current of the capacitors, inductances, busbars, etc.).
If the I2t reference current of the power module is not exceeded, then an overload (0 %) is not displayed.
In the other case, the degree of thermal overload is calculated whereby 100% corresponds to the maximum permissible value and results in shutdown (trip) (F30005).

Dependency: Refer to: p0290, p0294

© Siemens AG, 2005. All rights reserved

r0037[0...19] CO: Power module temperatures / PM temperatures

A_INF, B_INF, SERVO, S_INF, VECTOR

Can be changed: -		**Access level:** 3
Data type: Floating Point	**Data set:** -	**Function diagram:** 8014
P-Group: Displays, signals	**Units group:** TEMPERATURE	**Unit selection:** -
Min	**Max**	**Factory setting**
- [°C]	- [°C]	- [°C]

Description: Displays the temperatures in the power module.

Index:
[0] = Maximum inverter
[1] = Maximum depletion layer
[2] = Maximum rectifier
[3] = Air intake
[4] = Electronics unit in the power module
[5] = Inverter 1
[6] = Inverter 2
[7] = Inverter 3
[8] = Inverter 4
[9] = Inverter 5
[10] = Inverter 6
[11] = Rectifier 1
[12] = Rectifier 2
[13] = Depletion layer 1
[14] = Depletion layer 2
[15] = Depletion layer 3
[16] = Depletion layer 4
[17] = Depletion layer 5
[18] = Depletion layer 6
[19] = Cooling system water intake

Dependency: Refer to: p0290

r0038 Power factor, smoothed / CosPhi smooth

A_INF, S_INF, VECTOR

Can be changed: -		**Access level:** 3
Data type: Floating Point	**Data set:** -	**Function diagram:** 6799, 8850, 8950
P-Group: Displays, signals	**Units group:** -	**Unit selection:** -
Min	**Max**	**Factory setting**
-	-	-

Description: Displays the smoothed actual power factor.

Note: Smoothing time constant = 300 ms
The signal is not suitable as process quantity and may only be used as display quantity.
Significance for the motor: Motor power factor
Significance for the infeed: Power factor at the connection point (p3470, p3471)

p0045 Smoothing time constant, display values / T_smth display

SERVO, VECTOR

Can be changed: U, T		**Access level:** 2
Data type: Floating Point	**Data set:** -	**Function diagram:** 5610, 5730, 6010, 6714, 8012
P-Group: -	**Units group:** TIME_M3	**Unit selection:** -
Min	**Max**	**Factory setting**
0.00 [ms]	200.00 [ms]	1.00 [ms]

Description: Sets the smoothing time constant for the following display values:
SERVO: r0078[1], r0079[1], r0081 (calculated from the quantities smoothed with p0045), r0082[1].
VECTOR: r0063[1], r0068[1], r0080[1], r0082[1].

© Siemens AG, 2005. All rights reserved

r0046 CO/BO: Infeed missing enable signals / INF miss enable

A_INF, S_INF

Can be changed: - **Access level:** 1

Data type: Unsigned32 **Data set:** - **Function diagram:** 8934

P-Group: Displays, signals **Units group:** - **Unit selection:** -

Min	Max	Factory setting
-	-	-

Description: Displays missing enable signals that are preventing the closed-loop infeed control from being commissioned.

Bit field:

Bit	Signal name	0 signal	1 signal	FP
00	OFF1 enable missing	No	Yes	-
01	OFF2 enable missing	No	Yes	-
03	Enable run missing	No	Yes	-
08	EP terminals enable missing	No	Yes	-
16	OFF1 enable internal missing	No	Yes	-
17	OFF2 enable internal missing	No	Yes	-
26	Infeed inactive or not operational	No	Yes	-

Dependency: Refer to: r0002

Note: The value r0046 = 0 indicates that all enable signals for the infeed are present.

Bit 00 = 1 (enable signal missing), if:

- the signal source in p0840 is a 0 signal.
- there is a power-on inhibit.

Bit 01 = 1 (enable signal missing), if:

- the signal source in p0844 or p0845 is a 0 signal.

Bit 03 = 1 (enable signal missing), if:

- the signal source in p0852 is a 0 signal.

Bit 08 = 1 (enable signal missing), if:

- the pulse enable via terminal EP is missing (booksize: X21, chassis: X41).

Bit 16 = 1 (enable signal missing), if:

- there is an OFF1 fault response. The system is only enable if the fault is removed and was acknowledged and the power-on inhibit withdrawn with OFF1 = 0.

Bit 17 = 1 (enable signal missing), if:

- The commissioning mode is selected (p0009 > 0 or p0010 > 0) or there is an OFF2 fault response or the OFF1 signal source (p0840) is changed.

Bit 26 = 1 (enable signal missing), if:

- the infeed is inactive (p0105 = 0) or is not operational (r7850[Do-Index]=0).

© Siemens AG, 2005. All rights reserved

r0046 CO/BO: Missing drive enable signals / Drv miss enable

SERVO, VECTOR

Can be changed: -
Access level: 1
Data type: Unsigned32
Data set: -
Function diagram: 2634
P-Group: Displays, signals
Units group: -
Unit selection: -

Min	Max	Factory setting
-	-	-

Description: Displays missing enable signals that are preventing the closed-loop drive control from being commissioned.

Bit field:

Bit	Signal name	0 signal	1 signal	FP
00	OFF1 enable missing	No	Yes	-
01	OFF2 enable missing	No	Yes	-
02	OFF3 enable missing	No	Yes	-
03	Enable run missing	No	Yes	-
05	STOP2 enable missing	No	Yes	-
06	STOP1 enable missing	No	Yes	-
08	EP terminals enable missing	No	Yes	-
09	Infeed enable missing	No	Yes	-
10	Ramp-function generator enable missing	No	Yes	-
11	Ramp-function generator start missing	No	Yes	-
12	Setpoint enable missing	No	Yes	-
16	OFF1 enable internal missing	No	Yes	-
17	OFF2 enable internal missing	No	Yes	-
18	OFF3 enable internal missing	No	Yes	-
19	Pulse enable internal missing	No	Yes	-
21	STOP2 enable internal missing	No	Yes	-
22	STOP1 enable internal missing	No	Yes	-
26	Drive inactive or not operational	No	Yes	-
27	Demagnetization not completed	No	Yes	-
28	Brake open missing	No	Yes	-
29	Cooling system ready signal missing	No	Yes	-
30	Speed controller inhibited	No	Yes	-
31	Jog setpoint active	No	Yes	-

Dependency: Refer to: r0002

Note: The value r0046 = 0 indicates that all enable signals for this drive are present.

Bit 00 = 1 (enable signal missing), if:

- the signal source in p0840 is a 0 signal.
- there is a power-on inhibit.

Bit 01 = 1 (enable signal missing), if:

- the signal source in p0844 or p0845 is a 0 signal.

Bit 02 = 1 (enable signal missing), if:

- the signal source in p0848 or p0849 is a 0 signal.

Bit 03 = 1 (enable signal missing), if:

- the signal source in p0852 is a 0 signal.

Bit 05, bit 06: (being developed)

Bit 08 = 1 (enable signal missing), if:

- the pulse enable via terminal EP is missing (booksize: X21, chassis: X41).

Bit 09 = 1 (enable signal missing), if:

- the signal source in p0864 is a 0 signal.

Bit 10 = 1 (enable signal missing), if:

- the signal source in p1140 is a 0 signal.

Bit 11 = 1 (enable signal missing) if the speed setpoint is frozen, because:

- the signal source in p1141 is a 0 signal.

or

- the speed setpoint is entered from jogging and the two signal sources for jogging, bit 0 (p1055) and bit 1 (p1056) have a 1 signal.

© Siemens AG, 2005. All rights reserved

Bit 12 = 1 (enable signal missing), if:
- the signal source in p1142 is a 0 signal.

Bit 16 = 1 (enable signal missing), if:
- there is an OFF1 fault response. The system is only enable if the fault is removed and was acknowledged and the power-on inhibit withdrawn with OFF1 = 0.

Bit 17 = 1 (enable signal missing), if:
- the commissioning mode is selected (p0009 > 0 or p0010 > 0) or an OFF2 fault response is present.

Bit 18 = 1 (enable signal missing), if:
- OFF3 has still not be completed or an OFF3 fault response is present.

Bit 19 = 1 (internal pulse enable missing), if:
- synchronization is running between the basic clock cycle, DRIVE-CLiQ clock cycle and application clock cycle.

Bit 21 = 1 (enable signal missing), if:
The pulses have been enabled and the speed setpoint has still not been enabled, because:
- the holding brake opening time (p1216) has still not expired.
- The motor has still not been magnetized (induction motor).

Bit 22: Being developed

Bit 26 = 1 (enable signal missing), if:
- the axis is inactive (p0105 = 0) or is not operational (r7850[DO-Index]=0).

Bit 27 = 1 (enable signal missing), if:
- de-magnetizing has still not been completed (only for VECTOR).

Bit 28 = 1 (enable signal missing), if:
- the holding brake is closed or has still not been opened.

Bit 30 = 1 (speed controller inhibited), if one of the following reasons is present:
- A 0 signal is available via BI: p0856.
- the function generator with current input is active.
- the measuring function "current controller reference frequency characteristic" is active.
- the pole position identification is active.
- the motor data identification is active (only for specific steps).

Bit 31 = 1 (enable signal missing), if:
- the speed setpoint is entered from jogging 1 or 2.

r0046 CO/BO: Infeed missing enable signals / INF miss enable

B_INF

Can be changed: - **Access level:** 1

Data type: Unsigned32 **Data set:** - **Function diagram:** -

P-Group: Displays, signals **Units group:** - **Unit selection:** -

Min	Max	Factory setting
-	-	-

Description: Displays missing enable signals that are preventing the closed-loop infeed control from being commissioned.

Bit field:

Bit	Signal name	0 signal	1 signal	FP
00	OFF1 enable missing	No	Yes	-
01	OFF2 enable missing	No	Yes	-
08	EP terminals enable missing	No	Yes	-
16	OFF1 enable internal missing	No	Yes	-
17	OFF2 enable internal missing	No	Yes	-
26	Infeed inactive or not operational	No	Yes	-

Dependency: Refer to: r0002

© Siemens AG, 2005. All rights reserved

Note: The value r0046 = 0 indicates that all enable signals for the infeed are present.
Bit 00 = 1 (enable signal missing), if:
- the signal source in p0840 is a 0 signal.
- there is a power-on inhibit.
Bit 01 = 1 (enable signal missing), if:
- the signal source in p0844 or p0845 is a 0 signal.
Bit 16 = 1 (enable signal missing), if:
- there is an OFF1 fault response. The system is only enable if the fault is removed and was acknowledged and the power-on inhibit withdrawn with OFF1 = 0.
Bit 17 = 1 (enable signal missing), if:
- The commissioning mode is selected (p0009 > 0 or p0010 > 0) or there is an OFF2 fault response or the OFF1 signal source (p0840) is changed.
Bit 26 = 1 (enable signal missing), if:
- the infeed is inactive (p0105 = 0) or is not operational (r7850[Do-Index]=0).

r0047 Motor data ident. routine and speed controller optimization / MotID and n_opt

VECTOR

Can be changed: - **Access level:** 1
Data type: Integer16 **Data set:** - **Function diagram:** -
P-Group: Displays, signals **Units group:** - **Unit selection:** -

Min	Max	Factory setting
-	-	-

Description: Displays the actual status for the motor data identification (standstill measurement) and the speed/velocity controller optimization (rotating measurement).

Values:
0: No measurement
120: Speed controller optimization, (vibration test)
140: Calculate speed controller setting
150: Measurement, moment of inertia
170: Measurement, magnetizing current and saturation characteristic
190: Speed encoder test
200: Rotating measurement selected
210: Pole position identification selected
220: identification, leakage inductance
230: Identification, rotor time constant
240: Identification, stator inductance
270: Identification, stator resistance
290: Identification, valve lockout time
300: Standstill measurement selected

r0049[0...3] Motor/encoder data set effective / MDS/EDS effective

SERVO, VECTOR

Can be changed: - **Access level:** 2
Data type: Unsigned8 **Data set:** - **Function diagram:** 8565
P-Group: Displays, signals **Units group:** - **Unit selection:** -

Min	Max	Factory setting
-	-	-

Description: Displays the effective Motor Data Set (MDS) and the effective Encoder Data Sets (EDS).

Index:
[0] = Motor Data Set MDS effective
[1] = Encoder Data Set EDS effective
[2] = Encoder 2 Encoder Data Set EDS effective
[3] = Encoder 3 Encoder Data Set EDS effective

Dependency: Refer to: p0186, p0187, p0188, p0189, r0838

Note: Value 99 means: No encoder assigned (not configured).

© Siemens AG, 2005. All rights reserved

r0050 CO/BO: Command Data Set CDS effective / CDS effective

A_INF, B_INF, SERVO, S_INF, TM41, VECTOR

Can be changed: - **Access level:** 2
Data type: Unsigned8 **Data set:** - **Function diagram:** 8560
P-Group: Displays, signals **Units group:** - **Unit selection:** -

Min	Max	Factory setting
-	-	-

Description: Displays the effective Command Data Set (CDS).

Bit field:

Bit	Signal name	0 signal	1 signal	FP
00	CDS eff., bit 0	Off	On	-
01	CDS eff., bit 1	Off	On	-
02	CDS eff., bit 2	Off	On	-
03	CDS eff., bit 3	Off	On	-

Dependency: Refer to: p0810, p0811, p0812, p0813, r0836

Note: The command data set selected via binector inputs p0810, p0811, p0812 and p0813 is displayed via r0836.

r0051 CO/BO: Drive Data Set DDS effective / DDS effective

SERVO, TM41, VECTOR

Can be changed: - **Access level:** 2
Data type: Unsigned8 **Data set:** - **Function diagram:** -
P-Group: Displays, signals **Units group:** - **Unit selection:** -

Min	Max	Factory setting
-	-	-

Description: Displays the effective Drive Data Set (DDS).

Bit field:

Bit	Signal name	0 signal	1 signal	FP
00	DDS eff., bit 0	Off	On	-
01	DDS eff., bit 1	Off	On	-
02	DDS eff., bit 2	Off	On	-
03	DDS eff., bit 3	Off	On	-
04	DDS eff., bit 4	Off	On	-

Dependency: Refer to: p0820, p0821, p0822, p0823, p0824, r0837

r0056 CO/BO: Closed-loop control status word 1 / Control_ZSW1

SERVO

Can be changed: - **Access level:** 3
Data type: Unsigned16 **Data set:** - **Function diagram:** 5492
P-Group: Displays, signals **Units group:** - **Unit selection:** -

Min	Max	Factory setting
-	-	-

Description: Displays the closed-loop control status word 1 (closed-loop control STW1) of the drive.

Bit field:

Bit	Signal name	0 signal	1 signal	FP
01	De-magnetizing completed	No	Yes	-
04	Magnetizing completed	No	Yes	2701
08	Field weakening active	No	Yes	-
14	Vdc_max controller active	No	Yes	-
15	Vdc_min controller active	No	Yes	-

Note: Re bit 04:
The bit is immediately set after power-on
Exception:
For an induction motor with brake (except for p1215 = 2), the bit is only set when 60% of the reference flux is reached.

© Siemens AG, 2005. All rights reserved

r0056 CO/BO: Closed-loop control status word 1 / Control_ZSW1

VECTOR

Can be changed: - **Access level:** 3
Data type: Unsigned16 **Data set:** - **Function diagram:** 6492
P-Group: Displays, signals **Units group:** - **Unit selection:** -

Min	Max	Factory setting
-	-	-

Description: Displays the closed-loop control status word 1 (closed-loop control STW1) of the drive.

Bit field:

Bit	Signal name	0 signal	1 signal	FP
00	Initialization completed	No	Yes	-
01	De-magnetizing completed	No	Yes	-
02	Pulse enable present	No	Yes	-
03	Soft starting present	No	Yes	-
04	Magnetizing completed	No	Yes	-
06	Accelerating voltage active	No	Yes	-
07	Frequency negative	No	Yes	-
08	Field weakening active	No	Yes	-
09	Voltage limit active	No	Yes	-
10	Slip limit active	No	Yes	6310
11	Frequency limit active	No	Yes	-
12	Current limiting controller voltage output active	No	Yes	-
13	Current limiting controller, freq output active	not active	active	-
14	Vdc_max controller active	No	Yes	6220, 6320
15	Vdc_min controller active	No	Yes	6220, 6320

r0060 CO: Speed setpoint before the setpoint filter / n_set before filt.

SERVO, VECTOR

Can be changed: - **Access level:** 3
Data type: Floating Point **Data set:** - **Function diagram:** 2701, 2704, 5020, 6030, 6799
P-Group: Displays, signals **Units group:** SPEED_ROT **Unit selection:** -

Min	Max	Factory setting
- [1/min]	- [1/min]	- [1/min]

Description: Displays the actual speed/velocity setpoint at the input of the speed/velocity controller or V/f characteristic (after the interpolator).
Dependency: Refer to: r0020
Note: The speed setpoint is available smoothed (r0020) and unsmoothed (r0060).

r0060 CO: Velocity setpoint before the setpoint filter / n_set before filt.

SERVO (Lin)

Can be changed: - **Access level:** 3
Data type: Floating Point **Data set:** - **Function diagram:** 2701, 2704, 5020, 6030, 6799
P-Group: Displays, signals **Units group:** SPEED_LIN_METRIC_P3 **Unit selection:** -

Min	Max	Factory setting
- [m/min]	- [m/min]	- [m/min]

Description: Displays the actual speed/velocity setpoint at the input of the speed/velocity controller or V/f characteristic (after the interpolator).
Dependency: Refer to: r0020
Note: The speed setpoint is available smoothed (r0020) and unsmoothed (r0060).

© Siemens AG, 2005. All rights reserved

r0061 CO: Speed actual value motor encoder / n_act mot. encoder

SERVO, VECTOR

Can be changed: -		**Access level:** 2
Data type: Floating Point	**Data set:** -	**Function diagram:** 1580, 4710, 6010
P-Group: Displays, signals	**Units group:** SPEED_ROT	**Unit selection:** -
Min	**Max**	**Factory setting**
- [1/min]	- [1/min]	- [1/min]

Description: Displays the speed/velocity sensed by the motor encoder (unsmoothed).

r0061 CO: Velocity actual value, motor encoder / n_act mot. encoder

SERVO (Lin)

Can be changed: -		**Access level:** 2
Data type: Floating Point	**Data set:** -	**Function diagram:** 1580, 4710, 6010
P-Group: Displays, signals	**Units group:** SPEED_LIN_METRIC_P3	**Unit selection:** -
Min	**Max**	**Factory setting**
- [m/min]	- [m/min]	- [m/min]

Description: Displays the speed/velocity sensed by the motor encoder (unsmoothed).

r0062 CO: Speed setpoint after the filter / n_set after filter

SERVO, VECTOR

Can be changed: -		**Access level:** 3
Data type: Floating Point	**Data set:** -	**Function diagram:** 1590, 1750, 5020, 5030, 5210, 6030
P-Group: Displays, signals	**Units group:** SPEED_ROT	**Unit selection:** -
Min	**Max**	**Factory setting**
- [1/min]	- [1/min]	- [1/min]

Description: Displays the actual speed/velocity setpoint after the setpoint filters.

r0062 CO: Velocity setpoint after the filter / n_set after filter

SERVO (Lin)

Can be changed: -		**Access level:** 3
Data type: Floating Point	**Data set:** -	**Function diagram:** 1590, 1750, 5020, 5030, 5210, 6030
P-Group: Displays, signals	**Units group:** SPEED_LIN_METRIC_P3	**Unit selection:** -
Min	**Max**	**Factory setting**
- [m/min]	- [m/min]	- [m/min]

Description: Displays the actual speed/velocity setpoint after the setpoint filters.

r0063 CO: Actual speed, smoothed / n_act smooth

SERVO

Can be changed: -		**Access level:** 3
Data type: Floating Point	**Data set:** -	**Function diagram:** 1580, 1590, 4710, 8010
P-Group: Displays, signals	**Units group:** SPEED_ROT	**Unit selection:** -
Min	**Max**	**Factory setting**
- [1/min]	- [1/min]	- [1/min]

Description: Displays the actual smoothed speed/velocity actual value for the speed/velocity control.
Dependency: Refer to: r0021
Note: The value is calculated in sensorless operation.
The actual speed/velocity value is available smoothed (r0021) and unsmoothed (r0063).

© Siemens AG, 2005. All rights reserved

r0063 CO: Actual speed, smoothed / n_act smooth

SERVO (Lin)

Can be changed: -		**Access level:** 3
Data type: Floating Point	**Data set:** -	**Function diagram:** 1580, 1590, 4710, 8010
P-Group: Displays, signals	**Units group:** SPEED_LIN_METRIC_P3	**Unit selection:** -
Min	**Max**	**Factory setting**
- [m/min]	- [m/min]	- [m/min]

Description: Displays the actual smoothed speed/velocity actual value for the speed/velocity control.
Dependency: Refer to: r0021
Note: The value is calculated in sensorless operation.
The actual speed/velocity value is available smoothed (r0021) and unsmoothed (r0063).

r0063 CO: Actual speed, smoothed / n_act smooth

TM41

Can be changed: -		**Access level:** 3
Data type: Floating Point	**Data set:** -	**Function diagram:** -
P-Group: Displays, signals	**Units group:** SPEED_ROT	**Unit selection:** -
Min	**Max**	**Factory setting**
- [1/min]	- [1/min]	- [1/min]

Description: Displays the currently smoothed speed actual value.
Note: For Terminal Module 41 (TM41), this value is used to interconnect with standard telegram 3 and is always zero.

r0063[0...1] CO: Actual speed value / n_act

VECTOR

Can be changed: -		**Access level:** 3
Data type: Floating Point	**Data set:** -	**Function diagram:** 1680, 6010, 6040, 6799
P-Group: Displays, signals	**Units group:** SPEED_ROT	**Unit selection:** -
Min	**Max**	**Factory setting**
- [1/min]	- [1/min]	- [1/min]

Description: Displays the actual speed of the closed-loop speed control and the V/f control.
Index: [0] = Umsmoothed
[1] = Smoothed with p0045
Dependency: Refer to: r0021
Note: The speed actual value is calculated in sensorless operation and for V/f control. For operation with encoder, r0063 is smoothed with p1441.
The speed actual value r0063[0] is additionally displayed - smoothed with p0045 - in r0063[1].

r0064 CO: Speed controller system deviation / n_ctrl system dev

SERVO, VECTOR

Can be changed: -		**Access level:** 3
Data type: Floating Point	**Data set:** -	**Function diagram:** 5040, 6040
P-Group: Displays, signals	**Units group:** SPEED_ROT	**Unit selection:** -
Min	**Max**	**Factory setting**
- [1/min]	- [1/min]	- [1/min]

Description: Displays the actual control difference of the speed/velocity controller.
Note: In the servo control mode with active reference model, the system deviation to the P component of the speed/velocity controller is displayed.

© Siemens AG, 2005. All rights reserved

r0064 CO: Velocity controller system deviation / n_ctrl system dev

SERVO (Lin)

Can be changed: -		**Access level:** 3
Data type: Floating Point	**Data set:** -	**Function diagram:** 5040, 6040
P-Group: Displays, signals	**Units group:** SPEED_LIN_METRIC_P3	**Unit selection:** -
Min	**Max**	**Factory setting**
- [m/min]	- [m/min]	- [m/min]

Description: Displays the actual control difference of the speed/velocity controller.

Note: In the servo control mode with active reference model, the system deviation to the P component of the speed/velocity controller is displayed.

r0065 Slip frequency / f_Slip

SERVO, VECTOR

Can be changed: -		**Access level:** 3
Data type: Floating Point	**Data set:** -	**Function diagram:** 6310, 6730
P-Group: Displays, signals	**Units group:** FREQUENCY	**Unit selection:** -
Min	**Max**	**Factory setting**
- [Hz]	- [Hz]	- [Hz]

Description: Displays the slip frequency for induction motors.

r0066 CO: Infeed line frequency / INF f_line

A_INF, S_INF

Can be changed: -		**Access level:** 3
Data type: Floating Point	**Data set:** -	**Function diagram:** 8850, 8864, 8950, 8964
P-Group: Displays, signals	**Units group:** FREQUENCY	**Unit selection:** -
Min	**Max**	**Factory setting**
- [Hz]	- [Hz]	- [Hz]

Description: Displays the line frequency.

Dependency: Refer to: r0024

Note: The line frequency is available smoothed (r0024) and unsmoothed (r0066).

A positive sign of the frequency is obtained when the line supply phases U, V and W are connected with the correct phase sequence.

A negative sign of the frequency is obtained when the 3 line phases are interchanged therefore designating a negative direction of the rotating field of the 3-phase line supply voltage.

r0066 CO: Drive output frequency / Drv f_output

SERVO, VECTOR

Can be changed: -		**Access level:** 3
Data type: Floating Point	**Data set:** -	**Function diagram:** 1690, 5300, 5730, 6310, 6730, 6731, 6799
P-Group: Displays, signals	**Units group:** FREQUENCY	**Unit selection:** -
Min	**Max**	**Factory setting**
- [Hz]	- [Hz]	- [Hz]

Description: Displays the Motor Module output frequency.

Dependency: Refer to: r0024

Note: The output frequency is available smoothed (r0024) and unsmoothed (r0066).

© Siemens AG, 2005. All rights reserved

r0067[0...1] Permissible absolute infeed current magnitude OK / INF I_abs.val.perm

A_INF, S_INF

Can be changed: -			**Access level:** 3
Data type: Floating Point	**Data set:** -		**Function diagram:** -
P-Group: Displays, signals	**Units group:** CURRENT_AC_EFF		**Unit selection:** -
Min	**Max**		**Factory setting**
- [Aeff]	- [Aeff]		- [Aeff]

Description: Displays the actual permissible absolute line-side current.

Index: [0] = Motor mode
[1] = Regenerative mode

Dependency: The permissible current is either the maximum converter current or the parameterized current limits, whichever is lower.
Refer to: p3530, p3531

r0067 Maximum drive output current / Drv I_output max

SERVO, VECTOR

Can be changed: -			**Access level:** 3
Data type: Floating Point	**Data set:** -		**Function diagram:** 5722, 6300, 6640, 6724
P-Group: Displays, signals	**Units group:** CURRENT_AC_EFF		**Unit selection:** -
Min	**Max**		**Factory setting**
- [Aeff]	- [Aeff]		- [Aeff]

Description: Displays the maximum output current of the Motor Module.

Dependency: The maximum output current is determined by the parameterized current limit and the motor and converter thermal protection.
Refer to: p0290, p0640

r0068 CO: Absolute current actual value / I_act abs.val.

A_INF, SERVO, S_INF

Can be changed: -			**Access level:** 3
Data type: Floating Point	**Data set:** -		**Function diagram:** 5730, 8014, 8850, 8950
P-Group: Displays, signals	**Units group:** CURRENT_AC_EFF		**Unit selection:** -
Min	**Max**		**Factory setting**
- [Aeff]	- [Aeff]		- [Aeff]

Description: Displays actual absolute current.

Dependency: Refer to: r0027

Notice: Bei A_INF, S_INF the following applies:
The value is updated with the current controller sampling time.
The following applies for SERVO:
The value is updated with a sampling time of 1 ms.

Note: The calculated RMS value is only applicable for alternating currents.
For DC current, a value is displayed that is too low by sqrt(2).
Absolute current value = sqrt(Iq^2 + Id^2)
The absolute current actual value is available smoothed (r0027) and unsmoothed (r0068).

© Siemens AG, 2005. All rights reserved

r0068[0...1] CO: Absolute current actual value / I_act abs.val.

VECTOR	**Can be changed:** -		**Access level:** 3
	Data type: Floating Point	**Data set:** -	**Function diagram:** 6714, 6799, 8014
	P-Group: Displays, signals	**Units group:** CURRENT_AC_EFF	**Unit selection:** -
	Min	**Max**	**Factory setting**
	- [Aeff]	- [Aeff]	- [Aeff]

Description: Displays actual absolute current.

Index: [0] = Umsmoothed
[1] = Smoothed with p0045

Dependency: Refer to: r0027

Notice: The value is updated with the current controller sampling time.

Note: The calculated RMS value is only applicable for alternating currents.

For DC current, a value is displayed that is too low by sqrt(2).

Absolute current value = sqrt(Iq^2 + Id^2)

The absolute value of the current actual value is available smoothed (r0027 with 300 ms, r0068[1] with p0045) and unsmoothed (r0068[0]).

r0069[0...6] Phase current, actual value / I_Phase act value

A_INF, SERVO, S_INF, VECTOR	**Can be changed:** -		**Access level:** 3
	Data type: Floating Point	**Data set:** -	**Function diagram:** 1630, 5730, 6714, 6730, 6731, 8850, 8950
	P-Group: Displays, signals	**Units group:** CURRENT_AC_PP	**Unit selection:** -
	Min	**Max**	**Factory setting**
	- [A]	- [A]	- [A]

Description: Displays the measured actual phase currents as peak value.

Index: [0] = Phase U
[1] = Phase V
[2] = Phase W
[3] = Phase U offset
[4] = Phase V offset
[5] = Phase W offset
[6] = Total U, V, W

Note: In indices 3 ... 5, the offset currents of the 3 phases, which are added to correct the phase currents, are displayed.

The sum of the 3 corrected phase currents is displayed in index 6.

r0070 CO: Actual DC link voltage / Vdc_act

A_INF, B_INF, SERVO, S_INF, VECTOR	**Can be changed:** -		**Access level:** 3
	Data type: Floating Point	**Data set:** -	**Function diagram:** 1774, 5730, 6723, 6724, 6730, 6731, 6799, 8750, 8850, 8864, 8940, 8950, 8964
	P-Group: Displays, signals	**Units group:** VOLTAGE_DC	**Unit selection:** -
	Min	**Max**	**Factory setting**
	- [V]	- [V]	- [V]

Description: Displays the measured actual value of the DC link voltage.

Dependency: Refer to: r0026

Note: The DC link voltage is available smoothed (r0026) and unsmoothed (r0070).

© Siemens AG, 2005. All rights reserved

r0071 Maximum output voltage / U_output max

VECTOR	**Can be changed:** -		**Access level:** 3
	Data type: Floating Point	**Data set:** -	**Function diagram:** 6300, 6724
	P-Group: Displays, signals	**Units group:** VOLTAGE_AC_EFF	**Unit selection:** -
	Min	**Max**	**Factory setting**
	- [Veff]	- [Veff]	- [Veff]

Description: Displays the maximum output voltage.

Dependency: The maximum output voltage depends on the actual DC link voltage (r0070) and the maximum modulation depth (p1803).

Note: As the (driven) motor load increases, the maximum output voltage drops as a result of the reduction in DC-link voltage.

r0072 CO: Infeed, input voltage / INF U_input

A_INF, S_INF	**Can be changed:** -		**Access level:** 3
	Data type: Floating Point	**Data set:** -	**Function diagram:** 8850, 8950
	P-Group: Displays, signals	**Units group:** VOLTAGE_AC_EFF	**Unit selection:** -
	Min	**Max**	**Factory setting**
	- [Veff]	- [Veff]	- [Veff]

Description: Displays the actual power module input voltage (Line Module).

Dependency: Refer to: r0025

Note: This value depends on the converter reactive current.
The input voltage is available smoothed (r0025) and unsmoothed (r0072).

r0072 CO: Drive, output voltage / Drv U_output

SERVO, VECTOR	**Can be changed:** -		**Access level:** 3
	Data type: Floating Point	**Data set:** -	**Function diagram:** 1630, 5730, 6730, 6731, 6799
	P-Group: Displays, signals	**Units group:** VOLTAGE_AC_EFF	**Unit selection:** -
	Min	**Max**	**Factory setting**
	- [Veff]	- [Veff]	- [Veff]

Description: Displays the actual power module output voltage (Motor Module).

Dependency: Refer to: r0025

Note: The output voltage is available smoothed (r0025) and unsmoothed (r0072).

r0073 Maximum modulation depth / Modulat_depth max

VECTOR	**Can be changed:** -		**Access level:** 3
	Data type: Floating Point	**Data set:** -	**Function diagram:** 6724
	P-Group: Modulation	**Units group:** PERCENT	**Unit selection:** -
	Min	**Max**	**Factory setting**
	- [%]	- [%]	- [%]

Description: Displays the maximum modulation depth.

Dependency: Refer to: p1803

© Siemens AG, 2005. All rights reserved

r0074 CO: Modulat_depth / Modulat_depth

A_INF, SERVO, VECTOR	**Can be changed:** -		**Access level:** 3
	Data type: Floating Point	**Data set:** -	**Function diagram:** 5730, 6730, 6731, 6799, 8940, 8950
	P-Group: Displays, signals	**Units group:** PERCENT	**Unit selection:** -
	Min	**Max**	**Factory setting**
	- [%]	- [%]	- [%]

Description: Displays the actual modulation depth.

Dependency: Refer to: r0028

Note: For space VECTOR modulation, 100% corresponds to the maximum output voltage without overcontrol.
Values above 100 % indicate an overcontrol condition - values below 100% have no overcontrol.
The phase voltage (phase-to-phase, RMS) is calculated as follows: (r0074 * r0070) / (sqrt(2) * 100 %).
The modulation depth is available smoothed (r0028) and unsmoothed (r0074).

r0075 Reactive current setoint / Id_set

A_INF	**Can be changed:** -		**Access level:** 3
	Data type: Floating Point	**Data set:** -	**Function diagram:** 8946
	P-Group: Displays, signals	**Units group:** CURRENT_AC_EFF	**Unit selection:** -
	Min	**Max**	**Factory setting**
	- [Aeff]	- [Aeff]	- [Aeff]

Description: Displays the reactive current setoint.

Note: The reactive current requirement of a line filter can be covered by the controlled infeed/regenerative feedback. The magnitude of the reactive current is determined by the capacitance of the line filter (p0221) that is automatically parameterized when a line filter is selected (p0220). For p0221 = 0, the controller does not generate reactive current for a line filter.
Setpoint r0075 includes the reactive current for a line filter that depends on the actual operating point.

r0075 Current setpoint, field-generating / Id_set

SERVO, VECTOR	**Can be changed:** -		**Access level:** 3
	Data type: Floating Point	**Data set:** -	**Function diagram:** 1630, 5714, 5722, 6714
	P-Group: Displays, signals	**Units group:** CURRENT_AC_EFF	**Unit selection:** -
	Min	**Max**	**Factory setting**
	- [Aeff]	- [Aeff]	- [Aeff]

Description: Displays the field-generating current setpoint (Id_set).

Note: This value is irrelevant for the V/f control mode.

r0076 Reactive current actual value / I_reactive_act

A_INF, S_INF	**Can be changed:** -		**Access level:** 3
	Data type: Floating Point	**Data set:** -	**Function diagram:** 1774, 1775, 8850, 8946, 8950
	P-Group: Displays, signals	**Units group:** CURRENT_AC_EFF	**Unit selection:** -
	Min	**Max**	**Factory setting**
	- [Aeff]	- [Aeff]	- [Aeff]

Description: Displays the reactive current actual value.

Dependency: Refer to: r0029

Note: The reactive current actual value is available smoothed (r0029) and unsmoothed (r0076).

© Siemens AG, 2005. All rights reserved

r0076 Current actual value, field-generating / Id_act

SERVO, VECTOR	**Can be changed:** -		**Access level:** 3
	Data type: Floating Point	**Data set:** -	**Function diagram:** 1630, 1710, 5714, 5730, 6714, 6799
	P-Group: Displays, signals	**Units group:** CURRENT_AC_EFF	**Unit selection:** -
	Min	**Max**	**Factory setting**
	- [Aeff]	- [Aeff]	- [Aeff]

Description: Displays the field-generating current actual value (Id_act).
Dependency: Refer to: r0029
Note: This value is irrelevant for the V/f control mode.
The field-generating current actual value is available smoothed (r0029) and unsmoothed (r0076).

r0077 CO: Active current setpoint / Iq_set

A_INF	**Can be changed:** -		**Access level:** 3
	Data type: Floating Point	**Data set:** -	**Function diagram:** 1774, 8940, 8946
	P-Group: Displays, signals	**Units group:** CURRENT_AC_EFF	**Unit selection:** -
	Min	**Max**	**Factory setting**
	- [Aeff]	- [Aeff]	- [Aeff]

Description: Displays the active current setpoint (Iq_set).

r0077 CO: Current setpoint, torque-generating / Iq_set

SERVO, VECTOR	**Can be changed:** -		**Access level:** 3
	Data type: Floating Point	**Data set:** -	**Function diagram:** 1630, 1774, 5714, 6710, 6714, 6719
	P-Group: Displays, signals	**Units group:** CURRENT_AC_EFF	**Unit selection:** -
	Min	**Max**	**Factory setting**
	- [Aeff]	- [Aeff]	- [Aeff]

Description: Displays the torque/force generating current setpoint.
Note: This value is irrelevant for the V/f control mode.

r0078 CO: Active current actual value / Iq_act

A_INF, S_INF	**Can be changed:** -		**Access level:** 3
	Data type: Floating Point	**Data set:** -	**Function diagram:** 1774, 1775, 8850, 8946, 8950
	P-Group: Displays, signals	**Units group:** CURRENT_AC_EFF	**Unit selection:** -
	Min	**Max**	**Factory setting**
	- [Aeff]	- [Aeff]	- [Aeff]

Description: Displays the actual value for the active current.
Dependency: Refer to: r0030
Note: The active current actual value is available smoothed (r0030) and unsmoothed (r0078).

© Siemens AG, 2005. All rights reserved

r0078 CO: Current actual value, torque-generating / Iq_act

VECTOR

Can be changed: -		**Access level:** 3
Data type: Floating Point	**Data set:** -	**Function diagram:** 1710, 6310, 6714, 6799
P-Group: Displays, signals	**Units group:** CURRENT_AC_EFF	**Unit selection:** -
Min	**Max**	**Factory setting**
- [Aeff]	- [Aeff]	- [Aeff]

Description: Displays the torque-generating current actual value (Iq_act).

Dependency: Refer to: r0030

Note: This value is irrelevant for the V/f control mode.

The torque-generating current actual value is available smoothed (r0030 with 300 ms) and unsmoothed (r0078).

r0078[0...1] CO: Current actual value, torque-generating / Iq_act

SERVO

Can be changed: -		**Access level:** 3
Data type: Floating Point	**Data set:** -	**Function diagram:** 1630, 5714, 5730
P-Group: Displays, signals	**Units group:** CURRENT_AC_EFF	**Unit selection:** -
Min	**Max**	**Factory setting**
- [Aeff]	- [Aeff]	- [Aeff]

Description: Displays the torque/force generating current actual value (Iq_act).

Index: [0] = Umsmoothed
[1] = Smoothed with p0045

Dependency: Refer to: r0030, p0045

Note: These values are irrelevant for the V/f control mode.

The torque/force-generating current actual value is available smoothed (r0030 with 100 ms, r0078[1] with p0045) and unsmoothed (r0078[0]).

r0079[0...1] CO: Torque setpoint total / M_set total

SERVO

Can be changed: -		**Access level:** 3
Data type: Floating Point	**Data set:** -	**Function diagram:** 5610, 8012
P-Group: Displays, signals	**Units group:** TORQUE	**Unit selection:** -
Min	**Max**	**Factory setting**
- [Nm]	- [Nm]	- [Nm]

Description: Displays the torque/force setpoint at the output of the speed/velocity controller (before clock cycle interpolation).

Index: [0] = Umsmoothed
[1] = Smoothed with p0045

r0079[0...1] CO: Total force setpoint / M_set total

SERVO (Lin)

Can be changed: -		**Access level:** 3
Data type: Floating Point	**Data set:** -	**Function diagram:** 5610, 8012
P-Group: Displays, signals	**Units group:** FORCE	**Unit selection:** -
Min	**Max**	**Factory setting**
- [N]	- [N]	- [N]

Description: Displays the torque/force setpoint at the output of the speed/velocity controller (before clock cycle interpolation).

Index: [0] = Umsmoothed
[1] = Smoothed with p0045

© Siemens AG, 2005. All rights reserved

r0079 CO: Torque setpoint total / M_set total

VECTOR	**Can be changed:** -		**Access level:** 3
	Data type: Floating Point	**Data set:** -	**Function diagram:** 1700, 1710, 6030, 6060, 6710, 8012
	P-Group: Displays, signals	**Units group:** TORQUE	**Unit selection:** -
	Min	**Max**	**Factory setting**
	- [Nm]	- [Nm]	- [Nm]

Description: Displays the torque/force setpoint at the output of the speed/velocity controller (before clock cycle interpolation).

r0080 CO: Torque actual value / M_act

SERVO	**Can be changed:** -		**Access level:** 3
	Data type: Floating Point	**Data set:** -	**Function diagram:** 5730
	P-Group: Displays, signals	**Units group:** TORQUE	**Unit selection:** -
	Min	**Max**	**Factory setting**
	- [Nm]	- [Nm]	- [Nm]

Description: Displays the actual torque/force actual value.
Dependency: Refer to: r0031
Note: The torque/force actual value is available smoothed (r0031) and unsmoothed (r0080).

r0080 CO: Torque actual value / M_act

SERVO (Lin)	**Can be changed:** -		**Access level:** 3
	Data type: Floating Point	**Data set:** -	**Function diagram:** 5730
	P-Group: Displays, signals	**Units group:** FORCE	**Unit selection:** -
	Min	**Max**	**Factory setting**
	- [N]	- [N]	- [N]

Description: Displays the actual torque/force actual value.
Dependency: Refer to: r0031
Note: The torque/force actual value is available smoothed (r0031) and unsmoothed (r0080).

r0080[0...1] CO: Torque actual value / M_act

VECTOR	**Can be changed:** -		**Access level:** 3
	Data type: Floating Point	**Data set:** -	**Function diagram:** 6714, 6799
	P-Group: Displays, signals	**Units group:** TORQUE	**Unit selection:** -
	Min	**Max**	**Factory setting**
	- [Nm]	- [Nm]	- [Nm]

Description: Displays the actual torque value.
Index: [0] = Umsmoothed
[1] = Smoothed with p0045
Dependency: Refer to: r0031
Note: The torque actual value is available smoothed (r0031 with 100 ms, r0080[1] with p0045) and unsmoothed (r0080[0]).

© Siemens AG, 2005. All rights reserved

r0081 CO: Torque utilization / M_Utilization

SERVO, VECTOR	**Can be changed:** -		**Access level:** 3
	Data type: Floating Point	**Data set:** -	**Function diagram:** 8012
	P-Group: Displays, signals	**Units group:** PERCENT	**Unit selection:** -
	Min	**Max**	**Factory setting**
	- [%]	- [%]	- [%]

Description: Displays the torque/force utilization as a percentage.
The torque/force utilization is obtained from the required smoothed torque/force referred to the torque/force limit.
Dependency: Refer to: r0033
Note: The torque utilization is available smoothed (r0033) and unsmoothed (r0081).
For SERVO, the following applies:
The calculation of the torque utilization depends on the selected smoothing time constant p0045.

r0081 CO: Force utilization / M_Utilization

SERVO (Lin)	**Can be changed:** -		**Access level:** 3
	Data type: Floating Point	**Data set:** -	**Function diagram:** 8012
	P-Group: Displays, signals	**Units group:** PERCENT	**Unit selection:** -
	Min	**Max**	**Factory setting**
	- [%]	- [%]	- [%]

Description: Displays the torque/force utilization as a percentage.
The torque/force utilization is obtained from the required smoothed torque/force referred to the torque/force limit.
Dependency: Refer to: r0033
Note: The torque utilization is available smoothed (r0033) and unsmoothed (r0081).
For SERVO, the following applies:
The calculation of the torque utilization depends on the selected smoothing time constant p0045.

r0082 CO: Active power actual value / P_act

A_INF, S_INF	**Can be changed:** -		**Access level:** 3
	Data type: Floating Point	**Data set:** -	**Function diagram:** 8850, 8950
	P-Group: Displays, signals	**Units group:** POWER_P3	**Unit selection:** -
	Min	**Max**	**Factory setting**
	- [kW]	- [kW]	- [kW]

Description: Displays the instantaneous active power.
Dependency: Refer to: r0032
Note: The active power is available smoothed (r0032 with 300 ms) and unsmoothed (r0082).

r0082[0...2] CO: Active power actual value / P_act

SERVO	**Can be changed:** -		**Access level:** 3
	Data type: Floating Point	**Data set:** -	**Function diagram:** 5730
	P-Group: Displays, signals	**Units group:** POWER_P3	**Unit selection:** -
	Min	**Max**	**Factory setting**
	- [kW]	- [kW]	- [kW]

Description: Displays the instantaneous active power.
Index: [0] = Umsmoothed
[1] = Smoothed with p0045
[2] = Power drawn
Dependency: Refer to: r0032
Note: The active power is available smoothed (r0032 with 100 ms, r0082[1] with p0045) and unsmoothed (r0082[0]).

© Siemens AG, 2005. All rights reserved

r0082[0...1] CO: Active power actual value / P_act

VECTOR	**Can be changed:** -		**Access level:** 3
	Data type: Floating Point	**Data set:** -	**Function diagram:** 6714, 6799
	P-Group: Displays, signals	**Units group:** POWER_P3	**Unit selection:** -
	Min	**Max**	**Factory setting**
	- [kW]	- [kW]	- [kW]

Description: Displays the instantaneous active power.
Index: [0] = Umsmoothed
[1] = Smoothed with p0045
Dependency: Refer to: r0032
Note: The active power is available smoothed (r0032 with 100 ms, r0082[1] with p0045) and unsmoothed (r0082[0]).

r0083 CO: Flux setpoint / Flux setpoint

SERVO, VECTOR	**Can be changed:** -		**Access level:** 3
	Data type: Floating Point	**Data set:** -	**Function diagram:** 5722
	P-Group: Displays, signals	**Units group:** FLUX_RELATIVE	**Unit selection:** -
	Min	**Max**	**Factory setting**
	- [%]	- [%]	- [%]

Description: Displays the flux setpoint.

r0084 CO: Actual flux / Actual flux

SERVO, VECTOR	**Can be changed:** -		**Access level:** 3
	Data type: Floating Point	**Data set:** -	**Function diagram:** 5722, 6730, 6731
	P-Group: Displays, signals	**Units group:** FLUX_RELATIVE	**Unit selection:** -
	Min	**Max**	**Factory setting**
	- [%]	- [%]	- [%]

Description: Displays the actual flux.

r0087 Actual power factor / CosPhi act value

VECTOR	**Can be changed:** -		**Access level:** 3
	Data type: Floating Point	**Data set:** -	**Function diagram:** 6730, 6731, 6799
	P-Group: Displays, signals	**Units group:** -	**Unit selection:** -
	Min	**Max**	**Factory setting**
	-	-	-

Description: Displays the actual active power factor.

r0088 DC-link voltage setpoint / Vdc setpoint

A_INF	**Can be changed:** -		**Access level:** 3
	Data type: Floating Point	**Data set:** -	**Function diagram:** 8940, 8964
	P-Group: Displays, signals	**Units group:** VOLTAGE_DC	**Unit selection:** -
	Min	**Max**	**Factory setting**
	- [V]	- [V]	- [V]

Description: Displays the setpoint for the DC link voltage.

© Siemens AG, 2005. All rights reserved

r0089[0...2] Actual phase voltage / U_phase act. val.

SERVO, VECTOR	**Can be changed:** -		**Access level:** 3
	Data type: Floating Point	**Data set:** -	**Function diagram:** 6719
	P-Group: Displays, signals	**Units group:** VOLTAGE_AC_PP	**Unit selection:** -
	Min	**Max**	**Factory setting**
	- [V]	- [V]	- [V]

Description: Displays the actual phase voltage.

Index: [0] = Phase U
[1] = Phase V
[2] = Phase W

r0093 CO: Pole position angle electrically normalized / Pole pos el norm

SERVO	**Can be changed:** -		**Access level:** 3
	Data type: Floating Point	**Data set:** -	**Function diagram:** -
	P-Group: Displays, signals	**Units group:** ANGLE	**Unit selection:** -
	Min	**Max**	**Factory setting**
	- [°]	- [°]	- [°]

Description: Displays the normalized electrical pole position angle.

Dependency: Refer to: r0094, p0431, r1778

Note: For operation with encoder and pulse cancellation, the following applies:
- the value is generated from r0094 + 180 °.
- this angle can be used to adjust the encoders of synchronous motors.

For pulse enable, the following applies:
- the value indicates the transformation angle used by the control + 180 °.
- this value is, contrary to r0094, also applicable (provides information) for sensorless operation and after a pole position identification routine.

r0094 CO: Transformation angle / Transformat_angle

A_INF, S_INF	**Can be changed:** -		**Access level:** 3
	Data type: Floating Point	**Data set:** -	**Function diagram:** 8850, 8950
	P-Group: Displays, signals	**Units group:** ANGLE	**Unit selection:** -
	Min	**Max**	**Factory setting**
	- [°]	- [°]	- [°]

Description: Displays the transformation angle.

Note: The transformation angle corresponds to the line supply angle.

r0094 CO: Transformation angle / Transformat_angle

SERVO, VECTOR	**Can be changed:** -		**Access level:** 3
	Data type: Floating Point	**Data set:** -	**Function diagram:** 1580, 4710, 6010, 6714, 6730
	P-Group: Displays, signals	**Units group:** ANGLE	**Unit selection:** -
	Min	**Max**	**Factory setting**
	- [°]	- [°]	- [°]

Description: Displays the transformation angle.

Dependency: Refer to: r0093, p0431, r1778

Note: The transformation angle corresponds to the electrical commutation angle.
If no pole position identification is carried-out (p1982), and the encoder is adjusted, the following applies:
The encoder supplies the value and indicates the electrical angle of the flux position (d axis).

© Siemens AG, 2005. All rights reserved

p0097 Select drive object type / Select DO type

CU_S	**Can be changed:** C1(1)		**Access level:** 1
	Data type: Integer16	**Data set:** -	**Function diagram:** -
	P-Group: Topology	**Units group:** -	**Unit selection:** -
	Min	**Max**	**Factory setting**
	0	12	0

Description: Executes an automatic device configuration.
In so doing, p0099, p0107 and p0108 are appropriately set.

Values:
0: No selection
1: Drive object type SERVO
2: Drive object type VECTOR
3: SINAMICS GM (DFEMV & VECTORMV)
4: SINAMICS SM (AFEMV & VECTORMV)
5: SINAMICS GL (VECTORGL)
12: Drive object type VECTOR parallel circuit

Dependency: Refer to: r0098, p0099
Refer to: A01330

Note: For p0097 = 0, p0099 is automatically set to the factor setting.
The setting p0097 = 1 is not possible for chassis-type power modules as well as for SINAMICS G or SINAMICS GM.
The setting p0097 = 12 is not possible for booksize power modules.

r0098[0...5] Actual device topology / Device_act topo

CU_S	**Can be changed:** -		**Access level:** 1
	Data type: Unsigned32	**Data set:** -	**Function diagram:** -
	P-Group: Topology	**Units group:** -	**Unit selection:** -
	Min	**Max**	**Factory setting**
	-	-	-

Description: Displays the automatically detected actual device topology in coded form.

Index:
[0] = DRIVE-CLiQ socket X100
[1] = DRIVE-CLiQ socket X101
[2] = DRIVE-CLiQ socket X102
[3] = DRIVE-CLiQ socket X103
[4] = DRIVE-CLiQ socket X104
[5] = DRIVE-CLiQ socket X105

Dependency: Refer to: p0097, p0099

Note: Topology coding: abcd efgh hex
a = number of Active Line Modules
b = number of Motor Modules
c = number of motors
d = number of encoders (or the line supply voltage sensing for Active Line Modules)
e = number of additional encoders (or the line supply voltage sensing for Active Line Modules)
f = number of Terminal Modules
g = number of terminal boards
h = reserved
if the value 0 is displayed in all indices, then components are not detected via DRIVE-CLiQ.
If a value F hex occurs at a position of the coding (abcd efgh hex), then an overflow has occurred.

© Siemens AG, 2005. All rights reserved

p0099[0...5] Device target topology / Device_target topo

CU_S

Can be changed: C1(1) **Access level:** 1

Data type: Unsigned32 **Data set:** - **Function diagram:** -

P-Group: Topology **Units group:** - **Unit selection:** -

Min	Max	Factory setting
0000 hex	FFFF FFFF hex	0000 hex

Description: Sets the device target topology in coded form (refer to r0098). The setting is made during commissioning.

Index: [0] = DRIVE-CLiQ socket X100
[1] = DRIVE-CLiQ socket X101
[2] = DRIVE-CLiQ socket X102
[3] = DRIVE-CLiQ socket X103
[4] = DRIVE-CLiQ socket X104
[5] = DRIVE-CLiQ socket X105

Dependency: The parameter can only be written into for p0097 = 0.

To perform an automatic device configuration run, an index of the device target topology must be set to the value of the device actual topology in r0098 for acknowledgement. An index of the device actual topology with a value other than 0 must be selected.

Refer to: p0097, r0098

Refer to: A01330

Note: The parameter can only be set to the values 0, the value of the actual device topology, the value of the actual device target topology and FFFFFFFF hex.

If the value 0 is displayed in all of the indices, then the system has still not be commissioned.

The value FFFFFFFF hex indicates that the topology was not generated by the automatic device configuration but was commissioned using the commissioning software (e.g. using parameter download).

p0100 IEC/NEMA mot stds / IEC/NEMA mot stds

SERVO, TM41, VECTOR

Can be changed: C2(1) **Access level:** 1

Data type: Integer16 **Data set:** - **Function diagram:** -

P-Group: Converter **Units group:** - **Unit selection:** -

Min	Max	Factory setting
0	1	0

Description: Defines whether the motor and drive converter power settings (e.g. rated motor power - p0307) are expressed in [kW] or [hp].

Depending on the selection, the rated motor frequency (p0310) is either set to 50 Hz or 60 Hz.

The following applies for IEC drives: The power factor (p0308) should be parameterized.

The following applies for NEMA drives: The efficiency (p0309) should be parameterized.

Values: 0: IEC motor [50 Hz / kW]
1: NEMA motor [60 Hz / hp]

Dependency: If p0100 is changed, all of the rated motor parameters are reset.

Refer to: r0206, p0210, p0300, p0304, p0305, p0307, p0308, p0309, p0310, p0311, p0312, p0314, p0320, p0322, p0323, p0335, r0336, r0337, p0338, p1800

Note: The parameter can only be changed for closed-loop VECTOR control (p0107).

The parameter value is not reset when the factory setting is restored (p0010 = 30, p0970).

© Siemens AG, 2005. All rights reserved

p0101[0...15] Drive object numbers / DO numbers

CU_S	**Can be changed:** C1(1)		**Access level:** 2
	Data type: Unsigned16	**Data set:** -	**Function diagram:** -
	P-Group: Topology	**Units group:** -	**Unit selection:** -
	Min	**Max**	**Factory setting**
	0	62	0

Description: The parameter contains the object number via which every drive object can be addressed.
The number of an existing drive object is entered into each index.
The numbers are automatically assigned once and cannot longer be changed as long as the object has not been deleted.
In the commissioning software, this object number cannot be entered using the Expert list, but is automatically assigned when inserting an object.

Index:
[0] = Drive object number, Control Unit
[1] = Drive object number, object 1
[2] = Drive object number, object 2
[3] = Drive object number, object 3
[4] = Drive object number, object 4
[5] = Drive object number, object 5
[6] = Drive object number, object 6
[7] = Drive object number, object 7
[8] = Drive object number, object 8
[9] = Drive object number, object 9
[10] = Drive object number, object 10
[11] = Drive object number, object 11
[12] = Drive object number, object 12
[13] = Drive object number, object 13
[14] = Drive object number, object 14
[15] = Drive object number, object 15

Note: Value = 0: No drive object is defined.

r0102 Number of drive objects / DO quantity

CU_S	**Can be changed:** -		**Access level:** 2
	Data type: Unsigned16	**Data set:** -	**Function diagram:** -
	P-Group: Topology	**Units group:** -	**Unit selection:** -
	Min	**Max**	**Factory setting**
	-	-	-

Description: Displays the total number of available drive objects.

Note: The numbers of the drive objects are in p0101.

p0103[0...15] Application-specific view / Appl_spec view

CU_S	**Can be changed:** C1(2)		**Access level:** 2
	Data type: Unsigned16	**Data set:** -	**Function diagram:** -
	P-Group: -	**Units group:** -	**Unit selection:** -
	Min	**Max**	**Factory setting**
	0	999	0

Description: The application-specific view of an existing drive object is entered into each index.

Dependency: Refer to: p0103, r0103, p0107, r0107
Refer to: F01051

© Siemens AG, 2005. All rights reserved

Note: The application-specific views are defined in files on the CompactFlash card with the following structure:
PDxxxyyy.ACX
xxx: Application-specific view, set using p0103
yyy: Type of drive object (p0107)
Example:
PD052011.ACX
--> "011" stands for the drive object, type SERVO
--> "052" is the view for this drive object set using p0103

r0103 Application-specific view / Appl_spec view

A_INF, B_INF, SERVO, S_INF, VECTOR

Can be changed: -		**Access level:** 2
Data type: Unsigned16	**Data set:** -	**Function diagram:** -
P-Group: Closed-loop control	**Units group:** -	**Unit selection:** -
Min	**Max**	**Factory setting**
-	-	-

Description: Displays the application-specific view of the individual drive object.
Dependency: Refer to: p0103, r0103, p0107, r0107
Refer to: F01051

p0105 Activate/de-activate drive object / DO act/de-act

CU_S

Can be changed: U, T		**Access level:** 2
Data type: Integer16	**Data set:** -	**Function diagram:** -
P-Group: Closed-loop control	**Units group:** -	**Unit selection:** -
Min	**Max**	**Factory setting**
0	1	1

Description: Setting to activate/de-activate a drive object.
Values:
0: De-activate drive object
1: Activate drive object
Dependency: Refer to: r0106

p0105 Activate/de-activate drive object / DO act/de-act

A_INF, B_INF, SERVO, S_INF, TB30, TM15, TM15DI/DO, TM17, TM31, TM41, VECTOR

Can be changed: T		**Access level:** 2
Data type: Integer16	**Data set:** -	**Function diagram:** -
P-Group: Closed-loop control	**Units group:** -	**Unit selection:** -
Min	**Max**	**Factory setting**
0	1	1

Description: Setting to activate/de-activate a drive object.
Values:
0: De-activate drive object
1: Activate drive object
Dependency: Refer to: r0106
Note: Setting a drive object to de-activated principally corresponds to the "parking axis" function. however, here, all of the DRIVE-CLiQ components, assigned to the drive object, are in involved.

© Siemens AG, 2005. All rights reserved

r0106 Drive object active/inactive / DO act/inact

All objects	**Can be changed:** -		**Access level:** 2
	Data type: Integer16	**Data set:** -	**Function diagram:** -
	P-Group: Closed-loop control	**Units group:** -	**Unit selection:** -
	Min	**Max**	**Factory setting**
	-	-	-

Description: Displays the "active/inactive" state of a drive object.

Values:
0: Drive object inactive
1: Drive object active

Dependency: Refer to: p0105

p0107[0...15] Drive object type / DO type

CU_S	**Can be changed:** C1(2)		**Access level:** 2
	Data type: Integer16	**Data set:** -	**Function diagram:** -
	P-Group: -	**Units group:** -	**Unit selection:** -
	Min	**Max**	**Factory setting**
	0	254	0

Description: The type of an existing drive object is entered into each index.

Values:
0: Not a type
1: SINAMICS S
2: SINAMICS G
3: SINAMICS I
4: SINAMICS CX32
5: SINAMICS GM
6: SINAMICS SM
7: SINAMICS GL
10: ACTIVE LINE MODULE
11: SERVO
12: VECTOR
13: VECTORMV
14: VECTORGL
20: SMART LINE MODULE
30: BASIC LINE MODULE
40: ACTIVE LINE MODULEMV
41: BASIC LINE MODULEMV
100: TB30 (Terminal Board)
200: TM31 (Terminal Module)
201: TM41 (Terminal Module)
202: TM17 High Feature (Terminal Module)
203: TM15 (Terminal Module)
204: TM15 (Terminal Module for SINAMICS)
254: CU-LINK

© Siemens AG, 2005. All rights reserved

Index: [0] = Drive object time, Control Unit
[1] = Drive object type, object 1
[2] = Drive object type, object 2
[3] = Drive object type, object 3
[4] = Drive object type, object 4
[5] = Drive object type, object 5
[6] = Drive object type, object 6
[7] = Drive object type, object 7
[8] = Drive object type, object 8
[9] = Drive object type, object 9
[10] = Drive object type, object 10
[11] = Drive object type, object 11
[12] = Drive object type, object 12
[13] = Drive object type, object 13
[14] = Drive object type, object 14
[15] = Drive object type, object 15

Dependency: Refer to: p0103, r0103, p0107, r0107
Refer to: F01051

Caution! If you change this parameter and exit the device commissioning mode, then the complete software will be set up again and all of the previous drive parameter settings are deleted.

Note: The number (p0101) and the associated drive object type are in the same index.
For SINAMICS S a drive object type can only be changed between SERVO and VECTOR. If you change the parameter and exit drive start-up (p0009 from 2 to 0) the drive parameters are set up again.

r0107 Drive object type / DO type

A_INF

Can be changed: - **Access level:** 2
Data type: Integer16 **Data set:** - **Function diagram:** -
P-Group: Closed-loop control **Units group:** - **Unit selection:** -

Min	Max	Factory setting
-	-	-

Description: Displays the type of each drive object.
Values: 10: ACTIVE LINE MODULE
Dependency: Refer to: p0103, r0103, p0107, r0107
Refer to: F01051

r0107 Drive object type / DO type

SERVO

Can be changed: - **Access level:** 2
Data type: Integer16 **Data set:** - **Function diagram:** -
P-Group: Closed-loop control **Units group:** - **Unit selection:** -

Min	Max	Factory setting
-	-	-

Description: Displays the type of each drive object.
Values: 11: SERVO
Dependency: Refer to: p0103, r0103, p0107, r0107
Refer to: F01051

© Siemens AG, 2005. All rights reserved

r0107 **Drive object type / DO type**

VECTOR

Can be changed: -
Data type: Integer16
P-Group: Closed-loop control
Min
-
Data set: -
Units group: -
Max
-
Access level: 2
Function diagram: -
Unit selection: -
Factory setting
-

Description: Displays the type of each drive object.
Values: 12: VECTOR
Dependency: Refer to: p0103, r0103, p0107, r0107
Refer to: F01051

r0107 **Drive object type / DO type**

S_INF

Can be changed: -
Data type: Integer16
P-Group: Closed-loop control
Min
-
Data set: -
Units group: -
Max
-
Access level: 2
Function diagram: -
Unit selection: -
Factory setting
-

Description: Displays the type of each drive object.
Values: 20: SMART LINE MODULE
Dependency: Refer to: p0103, r0103, p0107, r0107
Refer to: F01051

r0107 **Drive object type / DO type**

B_INF

Can be changed: -
Data type: Integer16
P-Group: Closed-loop control
Min
-
Data set: -
Units group: -
Max
-
Access level: 2
Function diagram: -
Unit selection: -
Factory setting
-

Description: Displays the type of each drive object.
Values: 30: BASIC LINE MODULE
Dependency: Refer to: p0103, r0103, p0107, r0107
Refer to: F01051

r0107 **Drive object type / DO type**

TB30

Can be changed: -
Data type: Integer16
P-Group: Closed-loop control
Min
-
Data set: -
Units group: -
Max
-
Access level: 2
Function diagram: -
Unit selection: -
Factory setting
-

Description: Displays the type of each drive object.
Values: 100: TB30 (Terminal Board)
Dependency: Refer to: p0103, r0103, p0107, r0107
Refer to: F01051

© Siemens AG, 2005. All rights reserved

r0107 **Drive object type / DO type**

TM31

Can be changed: -		**Access level:** 2
Data type: Integer16	**Data set:** -	**Function diagram:** -
P-Group: Closed-loop control	**Units group:** -	**Unit selection:** -
Min	**Max**	**Factory setting**
-	-	-

Description: Displays the type of each drive object.
Values: 200: TM31 (Terminal Module)
Dependency: Refer to: p0103, r0103, p0107, r0107
Refer to: F01051

r0107 **Drive object type / DO type**

TM41

Can be changed: -		**Access level:** 2
Data type: Integer16	**Data set:** -	**Function diagram:** -
P-Group: Closed-loop control	**Units group:** -	**Unit selection:** -
Min	**Max**	**Factory setting**
-	-	-

Description: Displays the type of each drive object.
Values: 201: TM41 (Terminal Module)
Dependency: Refer to: p0103, r0103, p0107, r0107
Refer to: F01051

r0107 **Drive object type / DO type**

TM17

Can be changed: -		**Access level:** 2
Data type: Integer16	**Data set:** -	**Function diagram:** -
P-Group: Closed-loop control	**Units group:** -	**Unit selection:** -
Min	**Max**	**Factory setting**
-	-	-

Description: Displays the type of each drive object.
Values: 202: TM17 High Feature (Terminal Module)
Dependency: Refer to: p0103, r0103, p0107, r0107
Refer to: F01051

r0107 **Drive object type / DO type**

TM15

Can be changed: -		**Access level:** 2
Data type: Integer16	**Data set:** -	**Function diagram:** -
P-Group: Closed-loop control	**Units group:** -	**Unit selection:** -
Min	**Max**	**Factory setting**
-	-	-

Description: Displays the type of each drive object.
Values: 203: TM15 (Terminal Module)
Dependency: Refer to: p0103, r0103, p0107, r0107
Refer to: F01051

© Siemens AG, 2005. All rights reserved

r0107 Drive object type / DO type

TM15DI/DO

Can be changed: -
Access level: 2
Data type: Integer16
Data set: -
Function diagram: -
P-Group: Closed-loop control
Units group: -
Unit selection: -

Min	Max	Factory setting
-	-	-

Description: Displays the type of each drive object.
Values: 204: TM15 (Terminal Module for SINAMICS)
Dependency: Refer to: p0103, r0103, p0107, r0107
Refer to: F01051

p0108[0...15] Drive object, function module / DO function module

CU_S

Can be changed: C1(2)
Access level: 2
Data type: Unsigned32
Data set: -
Function diagram: -
P-Group: -
Units group: -
Unit selection: -

Min	Max	Factory setting
0000 bin	1111 1111 1111 1111 1111 1111 1111 1111 bin	0000 bin

Description: The function module of an existing drive object is entered into each index.
Index: [0] = Function module Control Unit
[1] = Function module object 1
[2] = Function module object 2
[3] = Function module object 3
[4] = Function module object 4
[5] = Function module object 5
[6] = Function module object 6
[7] = Function module object 7
[8] = Function module object 8
[9] = Function module object 9
[10] = Function module object 10
[11] = Function module object 11
[12] = Function module object 12
[13] = Function module object 13
[14] = Function module object 14
[15] = Function module object 15

Bit field:

Bit	Signal name	0 signal	1 signal	FP
29	CAN	Not activated	Activated	-
30	COMMUNICATION BOARD	Not activated	Activated	-
31	CBE COMMUNICATION BOARD	Not activated	Activated	-

Note: A "function module" is a functional expansion of a drive object that can be activated when commissioning.

r0108 Drive object, function module / DO function module

A_INF, B_INF

Can be changed: -
Access level: 2
Data type: Unsigned32
Data set: -
Function diagram: -
P-Group: Closed-loop control
Units group: -
Unit selection: -

Min	Max	Factory setting
-	-	-

Description: Displays the activated function module for the particular drive object.

Bit field:

Bit	Signal name	0 signal	1 signal	FP
15	Parallel cct. config.	Not activated	Activated	-
28	Cooling system	Not activated	Activated	-
31	CBE COMMUNICATION BOARD	Not activated	Activated	-

Note: A "function module" is a functional expansion of a drive object that can be activated when commissioning.

© Siemens AG, 2005. All rights reserved

r0108 Drive object, function module / DO function module

SERVO

Can be changed: - **Access level:** 2
Data type: Unsigned32 **Data set:** - **Function diagram:** -
P-Group: Closed-loop control **Units group:** - **Unit selection:** -

Min	Max	Factory setting
-	-	-

Description: Displays the activated function module for the particular drive object.

Bit field:

Bit	Signal name	0 signal	1 signal	FP
08	Extended setpoint channel	Not activated	Activated	-
12	Linear motor	Not activated	Activated	-
13	Safety rotary axis	Not activated	Activated	-
14	Extended brake control	Not activated	Activated	-
16	Techn. ctrl	Not activated	Activated	-
17	Extended messages/monitoring	Not activated	Activated	-
28	Cooling system	Not activated	Activated	-
29	CAN	Not activated	Activated	-
31	CBE COMMUNICATION BOARD	Not activated	Activated	-

Note: A "function module" is a functional expansion of a drive object that can be activated when commissioning.

r0108 Drive object, function module / DO function module

VECTOR

Can be changed: - **Access level:** 2
Data type: Unsigned32 **Data set:** - **Function diagram:** -
P-Group: Closed-loop control **Units group:** - **Unit selection:** -

Min	Max	Factory setting
-	-	-

Description: Displays the activated function module for the particular drive object.

Bit field:

Bit	Signal name	0 signal	1 signal	FP
02	Closed-loop speed/torque control	Not activated	Activated	-
14	Extended brake control	Not activated	Activated	-
15	Parallel cct. config.	Not activated	Activated	-
16	Techn. ctrl	Not activated	Activated	-
17	Extended messages/monitoring	Not activated	Activated	-
28	Cooling system	Not activated	Activated	-
31	CBE COMMUNICATION BOARD	Not activated	Activated	-

Note: A "function module" is a functional expansion of a drive object that can be activated when commissioning.

r0108 Drive object, function module / DO function module

S_INF

Can be changed: - **Access level:** 2
Data type: Unsigned32 **Data set:** - **Function diagram:** -
P-Group: Closed-loop control **Units group:** - **Unit selection:** -

Min	Max	Factory setting
-	-	-

Description: Displays the activated function module for the particular drive object.

Bit field:

Bit	Signal name	0 signal	1 signal	FP
15	Parallel cct. config.	Not activated	Activated	-
31	CBE COMMUNICATION BOARD	Not activated	Activated	-

Note: A "function module" is a functional expansion of a drive object that can be activated when commissioning.

© Siemens AG, 2005. All rights reserved

p0110[0...2] DRIVE-CLiQ basis sampling times / DLQ basis clock

CU_S	**Can be changed:** C1(1)		**Access level:** 4
	Data type: Floating Point	**Data set:** -	**Function diagram:** -
	P-Group: Closed-loop control	**Units group:** TIME_M6	**Unit selection:** -
	Min	**Max**	**Factory setting**
	31.25 [µs]	10000.00 [µs]	[0] 125.00 [µs] [1] 250.00 [µs] [2] 250.00 [µs]

Description: Setting the basic clock cycles.

The basis clock cycle of the device (e.g. drive unit) is identical with the current controller clock cycle of a DRIVE-CLiQ communications line. All current controller clock cycles of the same communications line (e.g. current controller clock cycles of the drives) must be identical with the selected basis clock cycle.

The basis clock cycle for individual drives is selected in p0111.

Index: [0] = Bas. clock cycle 0
[1] = Bas. clock cycle 1
[2] = Bas. clock cycle 2

Note: The basis clock cycle can be changed in steps of 1.25 µs.

The values of the basic clock cycles are aligned to the number of drives.

The factory settings should be kept. For mixed operation involving Active Line Modules and Motor Modules with servo and VECTOR drives, the basic clock cycle 0 is used for the fastest clock cycle (servo) basic clock cycle 1 for the average clock cycle (Active Line Module) and basic clock cycle 2 for the slowest clock cycle (VECTOR).

After parameters have been changed, they should be saved and a POWER ON carried-out.

p0111 DRIVE-CLiQ basis sampling time selection / DLQ bas clock eval

A_INF, B_INF, SERVO, S_INF, TM15, TM15DI/DO, TM17, TM31, TM41, VECTOR	**Can be changed:** C1(3)		**Access level:** 4
	Data type: Integer16	**Data set:** -	**Function diagram:** -
	P-Group: Closed-loop control	**Units group:** -	**Unit selection:** -
	Min	**Max**	**Factory setting**
	0	2	0

Description: Selects the basis clock cycle for this drive.

Values:
0: Bas. clock cycle 0
1: Bas. clock cycle 1
2: Bas. clock cycle 2

Dependency: Refer to: p0110

Note: All of the drives communicating via the same DRIVE-CLiQ socket of the Control Unit must have the same basic clock cycle.

After parameters have been changed, they should be saved and a POWER ON carried-out.

© Siemens AG, 2005. All rights reserved

p0112 Sampling times pre-setting p0115 / t_sample for p0115

A_INF, B_INF, SERVO, S_INF, VECTOR

Can be changed: C1(3)		**Access level:** 4
Data type: Integer16	**Data set:** -	**Function diagram:** -
P-Group: Closed-loop control	**Units group:** -	**Unit selection:** -
Min	**Max**	**Factory setting**
0	5	3

Description: Pre-assignment of the sampling times in p0115.

The clock cycles for the current controller/speed controller/flux controller/setpoint channel / - / - / technology controller are pre-assigned as follows:

SINAMICS S, servo drive:

p0112 = 1: 250 / 250 / 250 / 4000 / - / - / 4000 µs (for chassis drive units)

p0112 = 2: 125 / 250 / 250 / 4000 / - / - / 4000 µs

p0112 = 3: 125 / 125 / 125 / 4000 / - / - / 4000 µs

p0112 = 4: 62.5 / 62.5 / 62.5 / 1000 / - / - / 1000 µs

p0112 = 5: Not possible

SINAMICS S, active infeed:

p0112 = 1: 400 / - / - / 1600 µs

p0112 = 2: 250 / - / - / 2000 µs

p0112 = 3: 125 / - / - / 2000 µs

p0112 = 4: 125 / - / - / 1000 µs

p0112 = 5: 125 / - / - / 500 µs

SINAMICS S, smart infeed:

p0112 = 1: 400 / - / - / 1600 µs

p0112 = 2: 250 / - / - / 2000 µs

p0112 = 3: 250 / - / - / 2000 µs

p0112 = 4: 250 / - / - / 1000 µs

p0112 = 5: Not possible

SINAMICS S, basic infeed:

p0112 = 1: 2000 / - / - / 2000 µs

p0112 = 2: 2000 / - / - / 2000 µs

p0112 = 3: 2000 / - / - / 2000 µs

p0112 = 4: 1000 / - / - / 1000 µs

p0112 = 5: 500 / - / - / 500 µs

SINAMICS S/G, VECTOR drive:

p0112 = 1: 400 / 1600 / 1600 / 1600 / - / - / 3200 µs (for a rated pulse frequency of 1.25 kHz)

p0112 = 2: 250 / 1000 / 2000 / 1000 / - / - / 4000 µs

p0112 = 3: 250 / 1000 / 1000 / 1000 / - / - / 4000 µs (for a rated pulse frequency of 2 kHz)

SINAMICS S, VECTOR drive:

p0112 = 4: 250 / 500 / 1000 / 500 / - / - / 2000 µs

p0112 = 5: 250 / 250 / 1000 / 250 / - / - / 1000 µs

SINAMICS GM/SM:

p0112 = 1,2: 1000 / 2000 / 2000 / 3000 / - / - / 2000 µs

p0112 = 3,4,5: 500 / 1500 / 1500 / 3000 / - / - / 1500 µs

Values:

0: Expert
1: xLow
2: Low
3: Standard
4: High
5: xHigh

Dependency: It is not permissible to select a value of p0112 if the associated current controller clock cycle is not identical to the basic clock cycle.

Refer to: p0110, p0111

© Siemens AG, 2005. All rights reserved

Note: For p0112 = 0 (expert) the individual sampling times in p0115 can be adjusted.
After parameters have been changed, they should be saved and a POWER ON carried-out.

p0115[0...6] Sampling times for internal control loops / t_sample int ctrl

A_INF, B_INF, SERVO, S_INF, VECTOR

Can be changed: C1(3)		**Access level:** 4
Data type: Floating Point	**Data set:** -	**Function diagram:** -
P-Group: Closed-loop control	**Units group:** TIME_M6	**Unit selection:** -
Min	**Max**	**Factory setting**
0.00 [µs]	16000.00 [µs]	[0] 125.00 [µs] [1] 125.00 [µs] [2] 125.00 [µs] [3] 4000.00 [µs] [4] 0.00 [µs] [5] 0.00 [µs] [6] 4000.00 [µs]

Description: Sets the sampling times for the control loops.
The default setting is made in p0112 and can only be changed for individual loops in the expert mode (p0112 = 0).

Index: [0] = Current controller
[1] = Speed controller
[2] = Flux controller
[3] = Setpoint channel
[4] = Pos ctr (beingDev)
[5] = Positioning (being developed)
[6] = Techn. ctrl

Dependency: The sampling times can only be separately set if p0112 is set to 0 (expert mode). If a sampling time is modified in the expert mode, then all of the sampling times with higher indices are automatically changed in the same ratio as the sampling time itself was changed. Slower time slices are only taken if the calculated sampling time is also permitted. Upper limit is 8 ms.
The current controller sampling times must be set so that they are identical to the selected basis clock cycle (p0111 and p0110).
Higher-level controls must be calculated in integral ratios to lower-level controls (e.g. p0115[1] = N * p0115[0]; where N is a whole number).
Refer to: p0110, p0111, p0112

Note: if a control loop does not exist (e.g. positioning), a 0 is assigned to the parameter value.
For function modules that can be activated (e.g. technology controller), the parameters values are pre-assigned.
For the Active Line Module (ALM), the currents and DC link voltage controllers operate with the same sampling time.
For the Basic Line Module (BLM), the DC link voltage measurement operates in the current controller clock cycle.
After parameters have been changed, they should be saved and a POWER ON carried-out.

p0117 Current controller computation deadtime mode / I_ctrl t_dead mode

CU_S

Can be changed: U, T		**Access level:** 4
Data type: Integer16	**Data set:** -	**Function diagram:** -
P-Group: Closed-loop control	**Units group:** -	**Unit selection:** -
Min	**Max**	**Factory setting**
0	6	6

Description: Sets the mode for the computation deadtime of the current controller.
0: Offset (shifted) clocking, minimum computation deadtime of each drive, automatic setting
1: Clocking at the same time, the deadtime aligns itself to the deadtime of the latest drive, automatic setting
2: Manual setting of the computation deadtime, early transfer
3: Manual setting of the computation deadtime, late transfer
4-6: As for 0-2, however, no early transfers are set for VECTORs

Dependency: Refer to: p0118
Refer to: A02100

© Siemens AG, 2005. All rights reserved

Note: Re p0117 = 0:
The times when the setpoints become effective for the individual controls is automatically and individually determined. Another computation deadtime is set for each control (closed-loop) (p0118). Current is impressed for the individual controls without any offset with respect to time (improved EMC compatibility).
Re p0117 = 1:
The latest closed-loop control determines when the setpoints for each of the individual controls become active. The same computation deadtime is set for each control (p0118). Current is impressed (flows) for the individual controls without any offset with respect to time.
Re p0117 = 2:
The computation deadtime is manually set. The user must optimize the value in p0118.
Re p0117 = 3:
Only for internal Siemens use.
Re p0117 = 4 - 6:
Behavior as for p0117 = 0 - 2, however for VECTORs, the earliest times are not determined.
The modified computation deadtime mode is not effective until the drive unit is powered-up again.

p0118 Current controller computation deadtime / I_ctrl t_dead

A_INF, B_INF, SERVO, S_INF, VECTOR

Can be changed: U, T		**Access level:** 4
Data type: Floating Point	**Data set:** -	**Function diagram:** -
P-Group: Closed-loop control	**Units group:** TIME_M6	**Unit selection:** -
Min	**Max**	**Factory setting**
0.00 [µs]	2000.00 [µs]	0.00 [µs]

Description: This parameter is preset as a function of the current controller sampling time (p0115[0]) and normally does not have to be changed.
Dependency: Refer to: p0117
Refer to: A02100
Note: For p0118 <= 0.005 µs, the current controller output is delayed by a complete current controller clock cycle (p0115[0]).
After p0118 has been changed, we recommend that the current controller is adapted (p1715).

p0120 Power Module Data Sets (PDS) number / PDS quantity

A_INF, B_INF, SERVO, S_INF, TM41, VECTOR

Can be changed: C1(3)		**Access level:** 2
Data type: Unsigned8	**Data set:** -	**Function diagram:** -
P-Group: Data sets	**Units group:** -	**Unit selection:** -
Min	**Max**	**Factory setting**
1	8	1

Description: Sets the number of Power Module Data Sets (PDS).
The value corresponds to the number of power modules connected together for a parallel circuit configuration.
Dependency: Refer to: p0107, r0107
Note: This parameter is only significant for drive objects A_INFEED and VECTOR with a parallel circuit configuration.

p0121[0...n] Power module component number / LT comp_no

A_INF, B_INF, SERVO, S_INF, VECTOR

Can be changed: C1(4)		**Access level:** 4
Data type: Unsigned8	**Data set:** PDS	**Function diagram:** -
P-Group: Data sets	**Units group:** -	**Unit selection:** -
Min	**Max**	**Factory setting**
0	199	0

Description: The power module data set is assigned to a power module using this parameter.
This unique component number is assigned when parameterizing the topology.
Only component numbers can be entered into this parameter that correspond to a power module.
Dependency: Refer to: p0107, r0107
Note: For parallel circuit configurations, the parameter index is assigned to a power module.

© Siemens AG, 2005. All rights reserved

p0124[0...15] Detection of main components using LED / Detection LED

CU_S

Can be changed: U, T | | **Access level:** 2
Data type: Unsigned8 | **Data set:** - | **Function diagram:** -
P-Group: Converter | **Units group:** - | **Unit selection:** -

Min	Max	Factory setting
0	1	0

Description: Detects the main components of the drive object selected via the index.

p0124[0...n] Power module detection via LED / LT detection LED

A_INF, B_INF, SERVO, S_INF, VECTOR

Can be changed: U, T | | **Access level:** 2
Data type: Unsigned8 | **Data set:** PDS | **Function diagram:** -
P-Group: Converter | **Units group:** - | **Unit selection:** -

Min	Max	Factory setting
0	1	0

Description: Detects the power module assigned to this drive and data set.
Note: While p0124 = 1, the READY LED flashes green/orange or red/orange with 2 Hz at the appropriate power module.
For parallel circuit configurations, the parameter index is assigned to a power module.

p0125[0...n] Activate/de-activate power module components / PM_comp act/de-act

A_INF, B_INF, SERVO, S_INF, VECTOR

Can be changed: C1(4), T | | **Access level:** 2
Data type: Integer16 | **Data set:** PDS | **Function diagram:** -
P-Group: Data sets | **Units group:** - | **Unit selection:** -

Min	Max	Factory setting
0	1	1

Description: Setting to activate/de-activate a power module component.
Values:
0: De-activate component
1: Activate component
Dependency: Refer to: r0126
Note: The activation of a component can be rejected if the component was inserted for the first time.
In this case, it is only possible to activate the component when the pulses for all of the drive objects are inhibited.

r0126[0...n] Power module components active/inactive / PM comp act/inact

A_INF, B_INF, SERVO, S_INF, VECTOR

Can be changed: - | | **Access level:** 2
Data type: Integer16 | **Data set:** PDS | **Function diagram:** -
P-Group: Data sets | **Units group:** - | **Unit selection:** -

Min	Max	Factory setting
-	-	-

Description: Displays the "active/inactive" state of a power module component.
Values:
0: Component inactive
1: Component active
Dependency: Refer to: p0105, p0125, p0897

r0127[0...n] Power module version EPROM data / PM EPROM version

A_INF, B_INF, SERVO, S_INF, VECTOR

Can be changed: - | | **Access level:** 3
Data type: Unsigned32 | **Data set:** PDS | **Function diagram:** -
P-Group: Converter | **Units group:** - | **Unit selection:** -

Min	Max	Factory setting
-	-	-

Description: Displays the version of the EPROM data of the power module.

© Siemens AG, 2005. All rights reserved

Dependency: Refer to: r0147, r0157
Note: For parallel circuit configurations, the parameter index is assigned to a power module.

r0128[0...n] Power module firmware version / LT FW_version

A_INF, B_INF, SERVO, S_INF, VECTOR

Can be changed: -
Access level: 3
Data type: Unsigned32
Data set: PDS
Function diagram: -
P-Group: Converter
Units group: -
Unit selection: -

Min	Max	Factory setting
-	-	-

Description: Displays the power module firmware version.
Dependency: Refer to: r0018, r0148, r0158, r0197, r0198
Note: Example:
The value 1010100 should be interpreted as V01.01.01.00.
For parallel circuit configurations, the parameter index is assigned to a power module.

p0130 Motor Data Sets (MDS) number / MDS quantity

SERVO, VECTOR

Can be changed: C1(3)
Access level: 2
Data type: Unsigned8
Data set: -
Function diagram: 8575
P-Group: Data sets
Units group: -
Unit selection: -

Min	Max	Factory setting
1	16	1

Description: Sets the number of Motor Data Sets (MDS).

p0131[0...n] Motor component number / Mot comp_no

SERVO, VECTOR

Can be changed: C1(4)
Access level: 4
Data type: Unsigned8
Data set: MDS
Function diagram: -
P-Group: Data sets
Units group: -
Unit selection: -

Min	Max	Factory setting
0	199	0

Description: The motor data set is assigned to a motor using this parameter.
This unique component number is assigned when parameterizing the topology.
Only component numbers can be entered into this parameter that correspond to a motor.

p0139[0...2] Copy Motor Data Set MDS / Copy MDS

SERVO, VECTOR

Can be changed: C2(15)
Access level: 2
Data type: Unsigned8
Data set: -
Function diagram: 8575
P-Group: Data sets
Units group: -
Unit selection: -

Min	Max	Factory setting
0	31	[0] 0 [1] 0 [2] 0

Description: Copying a Motor Data Set (MDS) into another.
Index: [0] = Source motor data set
[1] = Target motor data set
[2] = Start copying
Note: Procedure:
1. In Index 0, enter which motor data set should be copied.
2. In Index 1, enter the motor data set data that is to be copied into.
3. Start copying: Set index 2 from 0 to 1.
p0139[2] is automatically set to 0 when copying is completed.
When copying, p0131 is not taken into account.

© Siemens AG, 2005. All rights reserved

p0140 Encoder Data Sets (EDS) number / EDS quantity

SERVO, VECTOR	**Can be changed:** C1(3)		**Access level:** 4
	Data type: Unsigned8	**Data set:** -	**Function diagram:** -
	P-Group: Data sets	**Units group:** -	**Unit selection:** -
	Min	**Max**	**Factory setting**
	1	3	1

Description: Sets the number of Encoder Data Sets (EDS).

Note: When parameterizing the drive with "no encoder" there must be at least one encoder data set (p0140 >= 1).

p0141[0...n] Encoder interface (Sensor Module) component number / Enc_interf comp_no

SERVO, VECTOR	**Can be changed:** C1(4)		**Access level:** 4
	Data type: Unsigned8	**Data set:** EDS	**Function diagram:** 4704, 8570
	P-Group: Data sets	**Units group:** -	**Unit selection:** -
	Min	**Max**	**Factory setting**
	0	199	0

Description: This parameter is used to assign the encoder data set to an encoder evaluation (e.g. SMC).
This unique component number is assigned when parameterizing the topology.
Only component numbers can be entered into this parameter that correspond to an encoder evaluation.

Note: If the encoder evaluation and encoder are integrated (motor with DRIVE-CLiQ), then their component numbers are identical.
For an SMC, different component numbers are assigned for the SMC (p0141) and the (actual) encoder (p0142).

p0142[0...n] Encoder component number / Encoder comp_no

SERVO, VECTOR	**Can be changed:** C1(4)		**Access level:** 4
	Data type: Unsigned8	**Data set:** EDS	**Function diagram:** 4704
	P-Group: Data sets	**Units group:** -	**Unit selection:** -
	Min	**Max**	**Factory setting**
	0	199	0

Description: This parameter is used to assign the encoder data set to an encoder.
This assignment is made using the unique component number that was assigned when parameterizing the topology.
Only component numbers can be entered into this parameter that correspond to an encoder.

Note: If the encoder evaluation and encoder are integrated (motor with DRIVE-CLiQ), then their component numbers are identical.
For an SMC, different component numbers are assigned for the SMC (p0141) and the (actual) encoder (p0142).

p0144[0...n] Voltage sensing module detection via LED / VSM detection LED

A_INF, S_INF	**Can be changed:** U, T		**Access level:** 4
	Data type: Unsigned8	**Data set:** -	**Function diagram:** -
	P-Group: Encoder	**Units group:** -	**Unit selection:** -
	Min	**Max**	**Factory setting**
	0	1	0

Description: Detects the Voltage Sensing Module (VSM) module assigned to this infeed.

© Siemens AG, 2005. All rights reserved

p0144[0...n] Sensor Module detection via LED / SM detection LED

SERVO, VECTOR	**Can be changed:** U, T		**Access level:** 2
	Data type: Unsigned8	**Data set:** EDS	**Function diagram:** -
	P-Group: Encoder	**Units group:** -	**Unit selection:** -
	Min	**Max**	**Factory setting**
	0	1	0

Description: Detects the Sensor Module assigned to this drive and data set.

Note: While p0144 = 1, the READY LED flashes green/orange or red/orange with 2 Hz at the appropriate Sensor Module.

p0145[0...n] Activate/de-activate encoder interface / Enc_intf act/deact

A_INF, S_INF	**Can be changed:** C1(4), T		**Access level:** 2
	Data type: Integer16	**Data set:** -	**Function diagram:** -
	P-Group: Data sets	**Units group:** -	**Unit selection:** -
	Min	**Max**	**Factory setting**
	0	1	1

Description: Setting to activate/de-activate an encoder interface (voltage Sensor Module, VSM).

Values:
0: De-activate component
1: Activate component

Dependency: Refer to: r0146

Note: For chassis infeed modules, it is not possible to activate/de-activate the Voltage Sensing Module (VSM) via p0145. The VSM can only be activated/de-activated in the group with the appropriate infeed module via p0125[0...n].
The activation of a component can be rejected if the component was inserted for the first time.
In this case, it is only possible to activate the component when the pulses for all of the drive objects are inhibited.

p0145[0...n] Activate/de-activate encoder interface / Enc_intf act/deact

SERVO, VECTOR	**Can be changed:** C1(4), U, T		**Access level:** 2
	Data type: Integer16	**Data set:** EDS	**Function diagram:** -
	P-Group: Data sets	**Units group:** -	**Unit selection:** -
	Min	**Max**	**Factory setting**
	0	1	1

Description: Setting to activate/de-activate an encoder interface (Sensor Module).

Values:
0: De-activate component
1: Activate component

Dependency: Refer to: r0146

Note: The de-activation of an encoder interface corresponds to the"parking encoder" function and has the same effect.
The activation of a component can be rejected if the component was inserted for the first time.
In this case, it is only possible to activate the component when the pulses for all of the drive objects are inhibited.

r0146[0...n] Encoder interface active/inactive / Enc_intf act/inact

A_INF, S_INF	**Can be changed:** -		**Access level:** 2
	Data type: Integer16	**Data set:** -	**Function diagram:** -
	P-Group: Data sets	**Units group:** -	**Unit selection:** -
	Min	**Max**	**Factory setting**
	-	-	-

Description: Displays the "active/inactive" state of an encoder interface (Voltage Sensing Module, VSM).

Values:
0: Component inactive
1: Component active

Dependency: Refer to: p0105, p0145

© Siemens AG, 2005. All rights reserved

r0146[0...n] Encoder interface active/inactive / Enc_intf act/inact

SERVO, VECTOR	**Can be changed:** -		**Access level:** 2
	Data type: Integer16	**Data set:** EDS	**Function diagram:** -
	P-Group: Data sets	**Units group:** -	**Unit selection:** -
	Min	**Max**	**Factory setting**
	-	-	-

Description: Displays the "active/inactive" state of an encoder interface (Sensor Module).
Values: 0: Component inactive
1: Component active
Dependency: Refer to: p0105, p0145, p0480, p0897

r0147[0...n] Voltage sensing module, EPROM data version / VSM EEPROM version

A_INF, S_INF	**Can be changed:** -		**Access level:** 3
	Data type: Unsigned32	**Data set:** -	**Function diagram:** -
	P-Group: Encoder	**Units group:** -	**Unit selection:** -
	Min	**Max**	**Factory setting**
	-	-	-

Description: Displays the version of the EPROM data of the Voltage Sensing Module (VSM).

r0147[0...n] Sensor Module EPROM data version / SM EEPROM version

SERVO, VECTOR	**Can be changed:** -		**Access level:** 3
	Data type: Unsigned32	**Data set:** EDS	**Function diagram:** -
	P-Group: Encoder	**Units group:** -	**Unit selection:** -
	Min	**Max**	**Factory setting**
	-	-	-

Description: Displays the version of the EPROM data of the Sensor Module.
Dependency: Refer to: r0127, r0157

r0148[0...n] Voltage sensing module, firmware version / VSM FW_version

A_INF, S_INF	**Can be changed:** -		**Access level:** 3
	Data type: Unsigned32	**Data set:** -	**Function diagram:** -
	P-Group: Encoder	**Units group:** -	**Unit selection:** -
	Min	**Max**	**Factory setting**
	-	-	-

Description: Displays the firmware version of the Voltage Sensing Module (VSM).
Dependency: Refer to: r0018, r0128, r0158, r0197, r0198
Note: Example:
The value 1010100 should be interpreted as V01.01.01.00.

r0148[0...n] Sensor Module firmware version / SM FW_version

SERVO, VECTOR	**Can be changed:** -		**Access level:** 3
	Data type: Unsigned32	**Data set:** EDS	**Function diagram:** -
	P-Group: Encoder	**Units group:** -	**Unit selection:** -
	Min	**Max**	**Factory setting**
	-	-	-

Description: Displays the Sensor Module firmware version.
Dependency: Refer to: r0018, r0128, r0158, r0197, r0198
Note: Example:
The value 1010100 should be interpreted as V01.01.01.00.

© Siemens AG, 2005. All rights reserved

p0151 Terminal Module component number / TM comp_no

TM15, TM15DI/DO, TM17, TM31, TM41

Can be changed: C1(4)		**Access level:** 4
Data type: Unsigned8	**Data set:** -	**Function diagram:** 9550, 9552
P-Group: Data sets	**Units group:** -	**Unit selection:** -
Min	**Max**	**Factory setting**
0	199	0

Description: Sets the component number for the Terminal Module.
This unique component number is assigned when parameterizing the topology.
Only component numbers can be entered into this parameter that correspond to a Terminal Module.

p0154 Terminal Module detection via LED / TM detection LED

TM15, TM15DI/DO, TM17, TM31, TM41

Can be changed: U, T		**Access level:** 2
Data type: Unsigned8	**Data set:** -	**Function diagram:** -
P-Group: Terminals	**Units group:** -	**Unit selection:** -
Min	**Max**	**Factory setting**
0	1	0

Description: Detects the Terminal Module assigned to this drive and data set.
Note: While p0154 = 1, the READY LED flashes green/orange or red/orange with 2 Hz at the appropriate Terminal Module.

r0157 Terminal Module version EPROM data / TM Eep_version

TM15, TM15DI/DO, TM17, TM31, TM41

Can be changed: -		**Access level:** 3
Data type: Unsigned32	**Data set:** -	**Function diagram:** -
P-Group: Terminals	**Units group:** -	**Unit selection:** -
Min	**Max**	**Factory setting**
-	-	-

Description: Displays the version of the EPROM data of the Terminal Module.
Dependency: Refer to: r0127, r0147

r0158 Terminal Module firmware version / TM FW_version

TM15, TM15DI/DO, TM17, TM31, TM41

Can be changed: -		**Access level:** 3
Data type: Unsigned32	**Data set:** -	**Function diagram:** -
P-Group: Terminals	**Units group:** -	**Unit selection:** -
Min	**Max**	**Factory setting**
-	-	-

Description: Displays the Terminal Module firmware version.
Dependency: Refer to: r0018, r0128, r0148, r0197, r0198
Note: Example:
The value 1010100 should be interpreted as V01.01.01.00.

© Siemens AG, 2005. All rights reserved

p0161 Option board, component number / OptBoard comp_no

TB30

Can be changed: C1(4) **Access level:** 4
Data type: Unsigned8 **Data set:** - **Function diagram:** 9100
P-Group: Data sets **Units group:** - **Unit selection:** -

Min	Max	Factory setting
0	199	0

Description: Sets the component number for the option board (e.g. terminal board 30).
This unique component number is assigned when parameterizing the topology.
Only component numbers can be entered into this parameter that correspond to an option board.

p0170 Command Data Set (CDS) number / CDS quantity

A_INF, B_INF, SERVO, S_INF, TM41

Can be changed: C1(3) **Access level:** 2
Data type: Unsigned8 **Data set:** - **Function diagram:** -
P-Group: Commands **Units group:** - **Unit selection:** -

Min	Max	Factory setting
1	1	1

Description: Sets the number of Command Data Sets (CDS).
Note: It is possible to toggle between command parameters (BICO parameters) using this data set changeover.

p0170 Command Data Set (CDS) number / CDS quantity

VECTOR

Can be changed: C1(3) **Access level:** 2
Data type: Unsigned8 **Data set:** - **Function diagram:** -
P-Group: Commands **Units group:** - **Unit selection:** -

Min	Max	Factory setting
2	2	2

Description: Sets the number of Command Data Sets (CDS).
Note: It is possible to toggle between command parameters (BICO parameters) using this data set changeover.

p0180 Drive Data Set (DDS) number / DDS quantity

SERVO, TM41, VECTOR

Can be changed: C1(3) **Access level:** 2
Data type: Unsigned8 **Data set:** - **Function diagram:** 8565
P-Group: Data sets **Units group:** - **Unit selection:** -

Min	Max	Factory setting
1	32	1

Description: Sets the number of Drive Data Sets (DDS).

p0186[0...n] Motor Data Sets (MDS) number / MDS number

SERVO, VECTOR

Can be changed: C1(4) **Access level:** 3
Data type: Unsigned8 **Data set:** DDS **Function diagram:** 8575
P-Group: Data sets **Units group:** - **Unit selection:** -

Min	Max	Factory setting
0	15	0

Description: Using the parameter, each Drive Data Set (= index) is assigned the associated Motor Data Set (MDS).
The parameter value therefore corresponds to the number of the assigned motor data set.

© Siemens AG, 2005. All rights reserved

p0187[0...n] Encoder 1 encoder data set number / Enc 1 EDS number

SERVO, VECTOR	**Can be changed:** C1(4)		**Access level:** 3
	Data type: Unsigned8	**Data set:** DDS	**Function diagram:** 1580, 8570
	P-Group: Data sets	**Units group:** -	**Unit selection:** -
	Min	**Max**	**Factory setting**
	0	99	99

Description: Using the parameter, each Drive Data Set (= index) is assigned the associated Encoder Data Set (EDS) for encoder 1.
The parameter value therefore corresponds to the number of the assigned encoder data set.
Example:
Encoder data set 0 should be assigned to encoder 1 in drive data set 2.
--> p0187[2] = 0

Note: A value of 99 means that no encoder has been assigned to this drive data set (not configured).
The same value must be entered for all of the indices.

p0188[0...n] Encoder 2 encoder data set number / Enc 2 EDS number

SERVO, VECTOR	**Can be changed:** C1(4)		**Access level:** 3
	Data type: Unsigned8	**Data set:** DDS	**Function diagram:** 1580, 8570
	P-Group: Data sets	**Units group:** -	**Unit selection:** -
	Min	**Max**	**Factory setting**
	0	99	99

Description: Using the parameter, each Drive Data Set (= index) is assigned the associated Encoder Data Set (EDS) for encoder 2.
The parameter value therefore corresponds to the number of the assigned encoder data set.

Note: A value of 99 means that no encoder has been assigned to this drive data set (not configured).
The same value must be entered for all of the indices.

p0189[0...n] Encoder 3 encoder data set number / Enc 3 EDS number

SERVO, VECTOR	**Can be changed:** C1(4)		**Access level:** 3
	Data type: Unsigned8	**Data set:** DDS	**Function diagram:** 1580, 8570
	P-Group: Data sets	**Units group:** -	**Unit selection:** -
	Min	**Max**	**Factory setting**
	0	99	99

Description: Using the parameter, each Drive Data Set (= index) is assigned the associated Encoder Data Set (EDS) for encoder 3.
The parameter value therefore corresponds to the number of the assigned encoder data set.

Note: A value of 99 means that no encoder has been assigned to this drive data set (not configured).
The same value must be entered for all of the indices.

© Siemens AG, 2005. All rights reserved

r0192 Power module properties / PM properties

A_INF, B_INF, SERVO, S_INF, VECTOR

Can be changed: -
Access level: 3
Data type: Unsigned32
Data set: -
Function diagram: -
P-Group: Converter
Units group: -
Unit selection: -

Min	Max	Factory setting
-	-	-

Description: Displays the properties supported by the power module.

Bit field:

Bit	Signal name	0 signal	1 signal	FP
00	Edge modulation possible	No	Yes	-
01	Free telegram can be selected	No	Yes	-
02	Smart mode possible for Active Line Module	No	Yes	-
03	Safety Integrated possible for VECTOR	No	Yes	-
06	Water cooling	no	Yes	-
07	SERVO pulse frequency changeover, DDS-dependent	No	Yes	-
08	Simulation operation possible	No	Yes	-

Notice: This information represents the characteristics/features of the power module firmware. It does not provide information/data about the characteristics/features of the hardware (e.g. bit 06 = 1 means that although the firmware supports "water cooling", a power module with water cooling does not have to be used).

r0194[0...n] VSM properties / VSM properties

A_INF, S_INF

Can be changed: -
Access level: 4
Data type: Unsigned32
Data set: -
Function diagram: -
P-Group: Encoder
Units group: -
Unit selection: -

Min	Max	Factory setting
-	-	-

Description: Displays the properties supported by the Voltage Sensing Module (VSM).

Bit field:

Bit	Signal name	0 signal	1 signal	FP
00	Reserved	No	Yes	-

r0197 Loader 1 version / Loader 1 version

CU_S

Can be changed: -
Access level: 1
Data type: Unsigned32
Data set: -
Function diagram: -
P-Group: Closed-loop control
Units group: -
Unit selection: -

Min	Max	Factory setting
-	-	-

Description: Displays the version of loader 1 (first level loader).
Dependency: Refer to: r0018, r0128, r0148, r0158, r0198
Note: Example:
The value 1010100 should be interpreted as V01.01.01.00.

r0198 Loader 2 version / Loader 2 version

CU_S

Can be changed: -
Access level: 3
Data type: Unsigned32
Data set: -
Function diagram: -
P-Group: Closed-loop control
Units group: -
Unit selection: -

Min	Max	Factory setting
-	-	-

Description: Displays the version of loader 2 (second level loader).
Dependency: Refer to: r0018, r0128, r0148, r0158, r0197
Note: Example:
The value 1010100 should be interpreted as V01.01.01.00.

© Siemens AG, 2005. All rights reserved

p0199[0...24] Drive object name / DO name

All objects

Can be changed: C2(5)		**Access level:** 2
Data type: Unsigned16	**Data set:** -	**Function diagram:** -
P-Group: Applications	**Units group:** -	**Unit selection:** -
Min	**Max**	**Factory setting**
0	65535	0

Description: Freely assignable name for a drive object.

In the commissioning software, this name cannot be entered using the expert list, but is specified in the configuration assistant. The object name can be subsequently modified in the Project Navigator using standard Windows resources.

r0200[0...n] Power module, actual code number / PM code no. actual

A_INF, B_INF, SERVO, S_INF, VECTOR

Can be changed: -		**Access level:** 3
Data type: Unsigned16	**Data set:** PDS	**Function diagram:** -
P-Group: Converter	**Units group:** -	**Unit selection:** -
Min	**Max**	**Factory setting**
-	-	-

Description: Displays the unique code number of the power module.

Note: r0200 = 0: No power module found

For parallel circuit configurations, the parameter index is assigned to a power module.

p0201[0...n] Power module code number / PM code number

A_INF, B_INF, SERVO, S_INF, VECTOR

Can be changed: C2(2)		**Access level:** 3
Data type: Unsigned16	**Data set:** PDS	**Function diagram:** -
P-Group: Converter	**Units group:** -	**Unit selection:** -
Min	**Max**	**Factory setting**
0	65535	0

Description: Sets the actual code number from r0200 to acknowledge the power module being used.

When commissioned for the first time, the code number is automatically transferred from r0200 into p0201.

Note: The parameter is used to identify when the drive is being commissioned for the first time.

The power module commissioning can only be exited (p0201 = r0200), if the actual and acknowledged code numbers are identical (p0010 = 2).

For parallel circuit configurations, the parameter index is assigned to a power module.

© Siemens AG, 2005. All rights reserved

r0203[0...n] Actual power module type / PM actual type

A_INF, B_INF, SERVO, S_INF, VECTOR

Can be changed: -		**Access level:** 3
Data type: Integer16	**Data set:** PDS	**Function diagram:** -
P-Group: Converter	**Units group:** -	**Unit selection:** -
Min	**Max**	**Factory setting**
-	-	-

Description: Displays the type of power module found.

Values:

2: MICROMASTER 440
3: MICROMASTER 411
4: MICROMASTER 410
5: MICROMASTER 436
6: MICROMASTER 440 PX
7: MICROMASTER 430
100: SINAMICS S
150: SINAMICS G
200: SINAMICS GM
250: SINAMICS SM
300: SINAMICS GL

Note: For parallel circuit configurations, the parameter index is assigned to a power module.

r0204[0...n] Power module properties / PM properties

A_INF, B_INF, SERVO, S_INF, VECTOR

Can be changed: -		**Access level:** 3
Data type: Unsigned32	**Data set:** PDS	**Function diagram:** -
P-Group: Converter	**Units group:** -	**Unit selection:** -
Min	**Max**	**Factory setting**
-	-	-

Description: Displays the properties supported by the power module hardware.

Bit field:

Bit	Signal name	0 signal	1 signal	FP
00	DC/AC device	AC/AC device	DC/AC device	-
01	RFI filter available	No	Yes	-
02	Active Line Module available	No	Yes	-
03	Smart Line Module available	No	Yes	-
04	Basic Line Module available with thyristor bridge	No	Yes	-
05	Basic Line Module available with diode bridge	No	Yes	-
06	Water cooling	no	Yes	-
12	Safe brake control (SBC) supported	Yes	No	-

Note: For parallel circuit configurations, the parameter index is assigned to a power module.

© Siemens AG, 2005. All rights reserved

p0205 Power module application / PM application

VECTOR

Can be changed: C2(1)		**Access level:** 3
Data type: Integer16	**Data set:** -	**Function diagram:** -
P-Group: Converter	**Units group:** -	**Unit selection:** -
Min	**Max**	**Factory setting**
0	7	6

Description: Overloading the load duty cycles applies under the prerequisite that before and after the overload, the drive converter is operated with its base load current - in this case, a load duty cycle of 300 s is used as basis.

For booksize drive units, the following applies:

Only the setting p0205 = 0 can be selected. In this particular case, the base load current has a load duty cycle of 150 % for 60 s and 176 % for 30 s.

For chassis drive units, the following applies:

The base load current for a slight overload condition is based on a load duty cycle 110 % for 60 s and 150 % for 10 s.

The base load current for a high overload condition is based on a load duty cycle 150 % for 60 s and 160 % for 10 s.

Values:
0: Load duty cycle with high overload for VECTOR drives
1: Load duty cycle with low overload for VECTOR drives
6: S1 duty cycle for servo drives (feed drive)
7: S6 duty cycle for servo drives (spindle drive)

Note: When the parameter is changed, all of the motor parameters and the control mode are pre-assigned according to the selected application. The parameter has not influence when calculating the thermal overload.

p0205 can only be changed to the settings that are saved in the power module EEPROM.

Its value is not reset when factory values are restored (see p0010 = 30, p0970).

r0206[0...4] Rated power module power / PM P_rated

A_INF, B_INF, SERVO, S_INF, VECTOR

Can be changed: -		**Access level:** 2
Data type: Floating Point	**Data set:** -	**Function diagram:** -
P-Group: Converter	**Units group:** POWER_P3	**Unit selection:** -
Min	**Max**	**Factory setting**
- [kW]	- [kW]	- [kW]

Description: Displays the rated power module power for various load duty cycles.

Index:
[0] = Rating plate
[1] = Load duty cycle with high overload
[2] = Load duty cycle with low overload
[3] = S1 load duty cycle
[4] = S6 load duty cycle

Dependency: The value is displayed in [kW] or [hp].

Refer to: p0100, p0205

r0207[0...4] Rated power module current / PM I_rated

A_INF, B_INF, SERVO, S_INF, VECTOR

Can be changed: -		**Access level:** 2
Data type: Floating Point	**Data set:** -	**Function diagram:** 8014
P-Group: Converter	**Units group:** CURRENT_AC_EFF	**Unit selection:** -
Min	**Max**	**Factory setting**
- [Aeff]	- [Aeff]	- [Aeff]

Description: Displays the rated power module power for various load duty cycles.

Index:
[0] = Rating plate
[1] = Load duty cycle with high overload
[2] = Load duty cycle with low overload
[3] = S1 load duty cycle
[4] = S6 load duty cycle

Dependency: Refer to: p0205

© Siemens AG, 2005. All rights reserved

r0208 Rated power module line supply voltage / PM U_rated

A_INF, B_INF, SERVO, S_INF, VECTOR

Can be changed: -		**Access level:** 2
Data type: Floating Point	**Data set:** -	**Function diagram:** -
P-Group: Converter	**Units group:** VOLTAGE_AC_EFF	**Unit selection:** -
Min	**Max**	**Factory setting**
- [Veff]	- [Veff]	- [Veff]

Description: Displays the rated line supply voltage of the power module.
r0208 = 400: 380 - 480 V +/-10 %
r0208 = 500: 500 - 600 V +/-10 %
r0208 = 690: 660 - 690 V +/-10 %
For the Basic Line Module (BLM) the following applies:
r0208 = 690: 500 - 690 V +/-10 %

r0209[0...4] Power module, maximum current / PM I_max

A_INF, B_INF, SERVO, S_INF, VECTOR

Can be changed: -		**Access level:** 2
Data type: Floating Point	**Data set:** -	**Function diagram:** 8750, 8850, 8950
P-Group: Converter	**Units group:** CURRENT_AC_EFF	**Unit selection:** -
Min	**Max**	**Factory setting**
- [Aeff]	- [Aeff]	- [Aeff]

Description: Displays the maximum output current of the power module.
Index: [0] = Catalog
[1] = Load duty cycle with high overload
[2] = Load duty cycle with low overload
[3] = S1 load duty cycle
[4] = S6 load duty cycle
Dependency: Refer to: p0205

p0210 Drive unit line supply voltage / Supply voltage

A_INF, S_INF

Can be changed: C2(1)		**Access level:** 1
Data type: Floating Point	**Data set:** -	**Function diagram:** 8960
P-Group: Converter	**Units group:** VOLTAGE_AC_EFF	**Unit selection:** -
Min	**Max**	**Factory setting**
100 [Veff]	1000 [Veff]	400 [Veff]

Description: Sets the drive unit supply voltage.
The value corresponds to the rms value of the phase-to-phase rated line supply voltage.
Dependency: Refer to: p3400
Warning! If the infeed is continually in the controlled mode with high DC link voltages (p3510 > 660 V), depending on the particular application, this can damage the connected motors that have not been specified for these high voltages.
Before an active infeed with a line supply voltage p0210 > 415 V goes into pulsed operation it must be ensured that all of the components connected to the DC link can be permanently operated with DC link voltages exceeding 660 V.
Controlled operation of booksize power modules for p0210 > 415 V is possible if the maximum steady-state DC link voltage (p0280) is increased as follows: p0280 >= 1.5 * p0210 and p0280 > 660 V.
In this case, the setpoint of the DC link voltage p3510 is not automatically adapted. We recommend p3510 = 1.5 * p0210. Closed-loop voltage controlled operation is active with p3400.0 = 0 and p3400.3 = 1.
Notice: For p0210 > 415 V for booksize power modules with a supply voltage of 3-ph. 380 ... 480 V, the smart mode is automatically activated (p3400.0 = 1). In this case, the smart mode cannot be de-activated. This is because in the voltage controlled mode, the maximum steady-state DC link voltage (p0280) would be exceeded.

© Siemens AG, 2005. All rights reserved

Note: When pre-assigning the setpoint for the DC link voltage (p3510), the following is generally valid:
p3510 = 1.5 * p0210.
For booksize power modules with supply voltage of 3-ph. 380 ... 480 V AC, the following applies:
380 V <= p0210 <= 400 V --> default setpoint for the DC link voltage: p3510 = 600 V
401 V <= p0210 <= 415 V --> default setpoint for the DC link voltage: p3510 = 625 V
416 V <= p0210 <= 480 V --> smart mode for non-regulated DC link voltage: p3510 = 1.35 * p0210
The voltage range for the supply voltage depends on the type and the voltage class of the power module.
Active Line Module, 400 V unit: 380 V <= p0210 <= 480 V
Active Line Module, 690 V unit: 660 V <= p0210 <= 690 V
Smart Line Module, 400 V unit: 380 V <= p0210 <= 480 V
Smart Line Module, 690 V unit: 500 V <= p0210 <= 690 V

p0210 Drive unit line supply voltage / Supply voltage

SERVO, VECTOR

Can be changed: C2(2), T		**Access level:** 3
Data type: Unsigned16	**Data set:** -	**Function diagram:** -
P-Group: Converter	**Units group:** VOLTAGE_DC	**Unit selection:** -
Min	**Max**	**Factory setting**
1 [V]	63000 [V]	600 [V]

Description: Sets the drive unit supply voltage.
AC/AC drive units: The RMS value of the phase-to-phase line supply voltage should be entered.
DC/AC drive units: The rated DC voltage of the supply busbars should be entered.
VECTORMV is a DC/AC unit. Here, after the infeed parameterization has been completed, the
the DC link voltage to be read-out in p6625[2] should be entered here.

Dependency: For VECTOR (p0107) the following applies:
Set p1254 to 0 (automatic detection of the Vdc switch-in levels).
The switch-in thresholds of the Vdc_max controller are then directly determined using p0210.

Cautiont: If the line supply voltage is higher than the entered value, the Vdc controller may be automatically de-activated in some cases to prevent the motor from accelerating. In this case, an appropriate alarm is output.

Note: For VECTOR (p0107) the following applies:
If the line supply voltage is higher than the parameterized value, then the DC link voltage controller could be automatically de-activated in order to prevent the drive accelerating.
Setting ranges for p0210 as a function of the rated power module voltage:
V_rated = 400 V:
- p0210 = 380 ... 480 V (AC/AC), 510 ... 650 V (DC/AC)
V_rated = 500 V:
- p0210 = 500 ... 575 V (AC/AC), 675 ... 810 V (DC/AC)
V_rated = 690 V:
- p0210 = 660 ... 690 V (AC/AC), 890 ... 1035 V (DC/AC)
The pre-charging switch-in threshold for the DC link voltage (Vdc) is calculated from p0210:
Vdc_pre = p0210 * 0.82 * 1.35 (AC/AC)
Vdc_pre = p0210 * 0.82 (DC/AC)
The undervoltage thresholds for the DC link voltage (Vdc) are calculated from p0210 as a function of the rated power module voltage:
V_rated = 400 V:
- V_min = p0210 * 0.78 (AC/AC), p0210 * 0.60 (DC/AC)
V_rated = 500 V:
- V_min = p0210 * 0.76 (AC/AC)
V_rated = 690 V:
- V_min = p0210 * 0.74 (AC/AC), p0210 * 0.57 (DC/AC)

© Siemens AG, 2005. All rights reserved

p0210 Drive unit line supply voltage / Supply voltage

B_INF	**Can be changed:** C2(1)		**Access level:** 1
	Data type: Floating Point	**Data set:** -	**Function diagram:** -
	P-Group: Converter	**Units group:** VOLTAGE_AC_EFF	**Unit selection:** -
	Min	**Max**	**Factory setting**
	100 [Veff]	1000 [Veff]	400 [Veff]

Description: Sets the drive unit supply voltage.
The value corresponds to the rms value of the phase-to-phase rated line supply voltage.

Note: The supply voltage range depends on the voltage class of the power module.
400 V unit: 380 V <= p0210 <= 480 V
690 V unit: 500 V <= p0210 <= 690 V

p0211 Rated line freq / Rated line freq

A_INF, S_INF	**Can be changed:** C2(1)		**Access level:** 1
	Data type: Floating Point	**Data set:** -	**Function diagram:** -
	P-Group: Converter	**Units group:** FREQUENCY	**Unit selection:** -
	Min	**Max**	**Factory setting**
	10 [Hz]	100 [Hz]	50 [Hz]

Description: Sets the rated line frequency for the infeed.

p0220 Infeed line filter type / INF line filt type

A_INF	**Can be changed:** C2(1)		**Access level:** 3
	Data type: Integer16	**Data set:** -	**Function diagram:** -
	P-Group: Converter	**Units group:** -	**Unit selection:** -
	Min	**Max**	**Factory setting**
	0	33	0

Description: Sets the line filter type for the Active Line Module (ALM).
Using the line filter type, the filter capacitance (p0221) and filter resistance (p0222) are pre-assigned.

Values:
0: No line filter
1: Wideband Line Filter Booksize 400 V 16 kW (6SL3000-0BE21-6AA0)
2: Wideband Line Filter Booksize 400 V 36 kW (6SL3000-0BE23-6AA0)
3: Wideband Line Filter Booksize 400 V 55 kW (6SL3000-0BE25-5AA0)
4: Wideband Line Filter Booksize 400 V 80 kW (6SL3000-0BE28-0AA0)
5: Wideband Line Filter Booksize 400 V 120 kW (6SL3000-0BE31-2AA0)
10: Active Interface Module F 400 V 132 kW 160 kW (6SL3300-7TE32-6Ax
11: Active Interface Module G 400 V 235 kW (6SL3300-7TE33-8Ax0)
12: Active Interface Module G 400 V 300 kW (6SL3300-7TE35-0Ax0)
13: Active Interface Module H 400 V 380 kW 500 kW (6SL3300-7TE38-4Ax
14: Active Interface Module J 400 V 630 kW 900 kW (6SL3300-7TE41-4Ax
15: Active Interface Module F 690 V 150 kW (6SL3300-7TH31-4Ax0)
16: Active Interface Module G 690 V 330 kW (6SL3300-7TH33-1Ax0)
17: Active Interface Module H 690 V 560 kW (6SL3300-7TH35-8Ax0)
18: Active Interface Module J 690 V 800 kW (6SL3300-7TH37-4Ax0)
19: Active Interface Module J 690 V 1100 kW 1400 kW (6SL3300-7TH41-3
31: Basic Line Filter Booksize 400 V 16 kW (6SL3000-0BE21-6DA0)
32: Basic Line Filter Booksize 400 V 36 kW (6SL3000-0BE23-6DA0)
33: Basic Line Filter Booksize 400 V 55 kW (6SL3000-0BE25-5DA0)

Notice: The parameters p0223 and p0224 for the reactor are pre-assigned using the rated drive converter power.

Note: The filter capacitance (p0221) and filter resistance (p0222) are required in the closed-loop voltage controlled mode to automatically compensate the filter reactive current.

© Siemens AG, 2005. All rights reserved

p0221 Infeed filter capacitance / INF C_filter

A_INF	**Can be changed:** C2(1)		**Access level:** 3
	Data type: Floating Point	**Data set:** -	**Function diagram:** 8950
	P-Group: Converter	**Units group:** CAPACITY_M6	**Unit selection:** -
	Min	**Max**	**Factory setting**
	0.00 [µF]	100000.00 [µF]	0.00 [µF]

Description: Sets the filter capacitance of the line filter (connected in a delta configuration).

Note: When a Siemens line filter is used (p0220) this parameter is automatically preset with the correct value.
For a parallel circuit, the value corresponds to the capacitance of a power module.

p0222 Infeed filter resistance / INF R_filter

A_INF	**Can be changed:** C2(1)		**Access level:** 3
	Data type: Floating Point	**Data set:** -	**Function diagram:** 8950
	P-Group: Converter	**Units group:** RESISTANCE	**Unit selection:** -
	Min	**Max**	**Factory setting**
	0.00000 [Ohm]	100.00000 [Ohm]	0.00000 [Ohm]

Description: Sets the filter resistance in series with the filter capacitance.

Note: When a Siemens line filter is used (p0220) this parameter is automatically preset with the correct value.
For a parallel circuit, the value corresponds to the resistance of a power module.

p0223 Infeed inductance between filter and power module / INF L filter/PM

A_INF, S_INF	**Can be changed:** C2(1)		**Access level:** 3
	Data type: Floating Point	**Data set:** -	**Function diagram:** 8850, 8950
	P-Group: Converter	**Units group:** INDUCTANCE_M3	**Unit selection:** -
	Min	**Max**	**Factory setting**
	0.001 [mH]	1000.000 [mH]	2.100 [mH]

Description: Sets the inductance between the filter and power module.

Note: The parameter is automatically pre-assigned depending on the power module being used and matches the specified Siemens commutating reactors.
For a parallel circuit, the value corresponds to the inductance of a power module.

p0224 Infeed resistance between filter and power module / INF R filter/PM

A_INF, S_INF	**Can be changed:** C2(1)		**Access level:** 3
	Data type: Floating Point	**Data set:** -	**Function diagram:** 8850, 8950
	P-Group: Converter	**Units group:** RESISTANCE	**Unit selection:** -
	Min	**Max**	**Factory setting**
	0.00000 [Ohm]	100.00000 [Ohm]	0.00100 [Ohm]

Description: Sets the resistance between the filter and power module

Note: The parameter is automatically pre-assigned depending on the power module being used and matches the specified Siemens commutating reactors.
For a parallel circuit, the value corresponds to the resistance of a power module.

© Siemens AG, 2005. All rights reserved

p0225 Infeed inductance between line supply and filter / INF L line/filter

A_INF, S_INF	**Can be changed:** C2(1)		**Access level:** 3
	Data type: Floating Point	**Data set:** -	**Function diagram:** 8850, 8950
	P-Group: Converter	**Units group:** INDUCTANCE_M3	**Unit selection:** -
	Min	**Max**	**Factory setting**
	0.001 [mH]	1000.000 [mH]	0.001 [mH]

Description: Sets the inductance between line supply and filter.

Note: The value must be, for example, appropriately increased if an additional inductance (reactor or transformer is installed in front of the filter).

p0226 Infeed resistance between line supply and filter / INF R line/filter

A_INF, S_INF	**Can be changed:** C2(1)		**Access level:** 3
	Data type: Floating Point	**Data set:** -	**Function diagram:** 8850, 8950
	P-Group: Converter	**Units group:** RESISTANCE	**Unit selection:** -
	Min	**Max**	**Factory setting**
	0.00 [Ohm]	100.00 [Ohm]	0.00 [Ohm]

Description: Sets the resistance between the line supply and filter.

Note: The value must be, for example, appropriately increased if an additional resistor is installed in front of the filter.

p0227 Infeed DC-link capacitance, total / INF C total

A_INF, S_INF	**Can be changed:** C2(1)		**Access level:** 3
	Data type: Floating Point	**Data set:** -	**Function diagram:** 8850, 8950
	P-Group: Converter	**Units group:** CAPACITY_M3	**Unit selection:** -
	Min	**Max**	**Factory setting**
	0.001 [mF]	1000.000 [mF]	0.700 [mF]

Description: Sets the total DC link capacitance.

Note: The total DC link capacitance of a DC link group comprises the sum of the sub-capacitances of all motor/infeed modules and the additional DC link capacitors.

p0230 Drive filter type, motor side / Drv filt type

VECTOR	**Can be changed:** C2(1, 2)		**Access level:** 1
	Data type: Integer16	**Data set:** -	**Function diagram:** -
	P-Group: Converter	**Units group:** -	**Unit selection:** -
	Min	**Max**	**Factory setting**
	0	4	0

Description: Sets the type of the filter at the motor side.

Values:
0: No filter
1: Motor reactor
2: dv/dt filter
3: Sinusoidal filter, Siemens
4: Sinusoidal filter, third-party

© Siemens AG, 2005. All rights reserved

Dependency: The following parameters are influenced using p0230:
p0230 = 1:
--> p0233 (power module, motor reactor) = filter inductance
p0230 = 3:
--> p0233 (power module, motor reactor) = filter inductance
--> p0234 (power module sinusoidal filter capacitance) = filter capacitance
--> p0290 (power module overload response) = inhibit pulse frequency reduction
--> p1082 (maximum speed) = Fmax filter / pole pair number
--> p1800 (pulse frequency) >= nominal pulse frequency of the filter
--> p1802 (modulator modes) = space VECTOR modulation without overcontrol
p0230 = 4:
--> p0290 (power module overload response) = inhibit pulse frequency reduction
--> p1802 (modulator modes) = space VECTOR modulation without overcontrol
The user must set the following parameters according to the data sheet of the sinusoidal filter and also the user must check whether they are permitted.
--> p0233 (power module, motor reactor) = filter inductance
--> p0234 (power module sinusoidal filter capacitance) = filter capacitance
--> p1082 (maximum speed) = Fmax filter / pole pair number
--> p1800 (pulse frequency) >= nominal pulse frequency of the filter
Refer to: p0233, p0234, p0290, p1082, p1800, p1802

Note: if a filter type cannot be selected, then this filter type is not permitted for the Motor Module.
p0230 = 2:
Chassis-type power modules with dv/dt filter may only be operated with a maximum pulse frequency of p1800 = 2.5 kHz. This means that the output frequency is restricted to 200 Hz.
p0230 = 3:
Sinusoidal filters with a rated pulse frequency of 1.25 or 2.5 kHz should only be operated with a current controller sampling rate p0115[0] = 400 μs, sinusoidal filters with a rated pulses frequency of 2 or 4 kHz with p0115[0] = 250 μs.
The sinusoidal filter cannot be selected if the current controller sampling rate hasn't been appropriately set.

p0233 Power module motor reactor / PM mot reactor

VECTOR

Can be changed: C2(2), U, T		**Access level:** 2
Data type: Floating Point	**Data set:** -	**Function diagram:** -
P-Group: Converter	**Units group:** INDUCTANCE_M3	**Unit selection:** -
Min	**Max**	**Factory setting**
0.000 [mH]	1000.000 [mH]	0.000 [mH]

Description: Enter the inductance of a filter connected at the power module output.
Dependency: The parameter is automatically pre-assigned when selecting a filter via p0230.
Refer to: p0230

p0234 Power module sinusoidal filter capacitance / PM sine filter C

VECTOR

Can be changed: C2(2), U, T		**Access level:** 2
Data type: Floating Point	**Data set:** -	**Function diagram:** -
P-Group: Converter	**Units group:** CAPACITY_M6	**Unit selection:** -
Min	**Max**	**Factory setting**
0.000 [μF]	1000.000 [μF]	0.000 [μF]

Description: Enters the capacitance of a sinusoidal filter connected at the power module output.
Dependency: The parameter is automatically pre-assigned when selecting a filter via (p0230).
Refer to: p0230
Note: The parameter value includes the sum of all of the capacitances of a phase connected in series (phase - ground).

© Siemens AG, 2005. All rights reserved

p0251[0...n] Operating hours counter, power module fan / PM fan t_oper

A_INF, B_INF, SERVO, S_INF, VECTOR

Can be changed: T		**Access level:** 3
Data type: Unsigned32	**Data set:** PDS	**Function diagram:** -
P-Group: Modulation	**Units group:** TIME_H	**Unit selection:** -
Min	**Max**	**Factory setting**
0 [h]	4294967295 [h]	0 [h]

Description: Displays the power module fan operating hours.
The number of hours operated can only be reset to 0 in this parameter (e.g. after a fan has been replaced).

Dependency: Refer to: p0252

p0252 Maximum operating time, power module fan / PM fan t_oper max

A_INF, B_INF, SERVO, S_INF, VECTOR

Can be changed: T		**Access level:** 4
Data type: Unsigned32	**Data set:** -	**Function diagram:** -
P-Group: Modulation	**Units group:** TIME_H	**Unit selection:** -
Min	**Max**	**Factory setting**
0 [h]	50000 [h]	40000 [h]

Description: Sets the maximum operating time of the power module fan.
The pre-alarm (warning) is output 500 hours before this set value.
The monitoring is de-activated with p0252 = 0.

Dependency: Refer to: p0251

p0260 Cooling system, starting time 1 / RKA start time 1

A_INF (RKA), B_INF (RKA), SERVO (RKA), VECTOR (RKA)

Can be changed: U, T		**Access level:** 4
Data type: Floating Point	**Data set:** -	**Function diagram:** -
P-Group: Converter	**Units group:** TIME	**Unit selection:** -
Min	**Max**	**Factory setting**
0.0 [s]	60.0 [s]	5.0 [s]

Description: Sets starting time 1 to monitor the cooling system after power on command.
The following feedback signals are evaluated:
- "RKA powered-up"
- "RKA water flow OK"

Dependency: Refer to: F49152, F49153

Note: RKA: Cooling system

p0261 Cooling system, starting time 2 / RKA start time 2

A_INF (RKA), B_INF (RKA), SERVO (RKA), VECTOR (RKA)

Can be changed: U, T		**Access level:** 4
Data type: Floating Point	**Data set:** -	**Function diagram:** -
P-Group: Converter	**Units group:** TIME	**Unit selection:** -
Min	**Max**	**Factory setting**
0.0 [s]	1200.0 [s]	180.0 [s]

Description: Sets starting time 2 to monitor the cooling system after power on command.
The following feedback signals are evaluated:
- "RKA conductivity, no fault"
- "RKA conductivity, no alarm"

Dependency: Refer to: p0266
Refer to: F49151, A49171

© Siemens AG, 2005. All rights reserved

p0262 Cooling system, fault conductivity delay time / RKA cond t_del

A_INF (RKA), B_INF (RKA), SERVO (RKA), VECTOR (RKA)

Can be changed: U, T | **Access level:** 4
Data type: Floating Point | **Data set:** - | **Function diagram:** -
P-Group: Converter | **Units group:** TIME | **Unit selection:** -

Min	Max	Factory setting
0.0 [s]	30.0 [s]	0.0 [s]

Description: Sets the delay time for the fault "RKA: Conductivity limit value exceeded".
The fault is only output if the cause is present for a time longer than is set in this parameter.

Dependency: Refer to: F49151

p0263 Cooling system fault water flow, delay time / RKA flow t_del

A_INF (RKA), B_INF (RKA), SERVO (RKA), VECTOR (RKA)

Can be changed: U, T | **Access level:** 4
Data type: Floating Point | **Data set:** - | **Function diagram:** -
P-Group: Converter | **Units group:** TIME | **Unit selection:** -

Min	Max	Factory setting
0.0 [s]	20.0 [s]	3.0 [s]

Description: Sets the delay time for the fault "RKA: Water flow rate too low".
The fault is only output if the cause is present for a time longer than is set in this parameter.

Dependency: Refer to: F49153

p0264 Cooling system, run-on time / RKA run-on time

A_INF (RKA), B_INF (RKA), SERVO (RKA), VECTOR (RKA)

Can be changed: U, T | **Access level:** 3
Data type: Floating Point | **Data set:** - | **Function diagram:** -
P-Group: Converter | **Units group:** TIME | **Unit selection:** -

Min	Max	Factory setting
0.0 [s]	180.0 [s]	30.0 [s]

Description: Sets the run-up time of the cooling system after a power-off command.

r0265 BO: Cooling system, control word / RKA ctrl word

A_INF (RKA), B_INF (RKA), SERVO (RKA), VECTOR (RKA)

Can be changed: - | **Access level:** 3
Data type: Unsigned8 | **Data set:** - | **Function diagram:** -
P-Group: Commands | **Units group:** - | **Unit selection:** -

Min	Max	Factory setting
-	-	-

Description: Displays the control word for the cooling system.

Bit field:

Bit	Signal name	0 signal	1 signal	FP
00	Power-up cooling system	Power-down	Power-up	-
01	Message, converter off	On	Off	-
02	Acknowledge faults	No acknowledgment	Acknowledgment	-
03	Leakage water detection OK	Leakage water	No leakage water	-

© Siemens AG, 2005. All rights reserved

p0266[0...7] BI: Cooling system, signal source feedback signals / RKA S_src fdbk

A_INF (RKA), B_INF (RKA), SERVO (RKA), VECTOR (RKA)

Can be changed: U, T | **Access level:** 3
Data type: Unsigned32 | **Data set:** - | **Function diagram:** -
P-Group: Communications | **Units group:** - | **Unit selection:** -

Min	Max	Factory setting
-	-	[0] 0 [1] 0 [2] 1 [3] 1 [4] 1 [5] 1 [6] 1 [7] 1

Description: Sets the signal sources for the feedback signals from the cooling system.

Index:
[0] = Cooling system power-up
[1] = Cooling system ready to be powered-up
[2] = Cooling system, no alarm present
[3] = Cooling system, no fault present
[4] = Cooling system, no leakage water
[5] = Cooling system water flow OK
[6] = Cooling system, conductivity < fault threshold
[7] = Cooling system, conductivity < alarm threshold

r0267 BO: Cooling system status word display / RKA ZSW display

A_INF (RKA), B_INF (RKA), SERVO (RKA), VECTOR (RKA)

Can be changed: - | **Access level:** 3
Data type: Unsigned16 | **Data set:** - | **Function diagram:** -
P-Group: Commands | **Units group:** - | **Unit selection:** -

Min	Max	Factory setting
-	-	-

Description: Displays the status word of the cooling system.

Bit field:

Bit	Signal name	0 signal	1 signal	FP
00	RKA powered-up	No	Yes	-
01	RKA ready to be powered-up	No	Yes	-
02	RKA no alarm present	No	Yes	-
03	RKA no fault present	No	Yes	-
04	RKA no leakage water	No	Yes	-
05	RKA water flow OK	No	Yes	-
06	RKA conductivity, no fault	No	Yes	-
07	RKA conductivity, no alarm	No	Yes	-

Dependency: Refer to: p0266

p0280 DC link voltage maximum steady-state / Vdc_max stat

A_INF

Can be changed: C2(1), T | **Access level:** 3
Data type: Floating Point | **Data set:** - | **Function diagram:** 8940, 8964
P-Group: Converter | **Units group:** VOLTAGE_DC | **Unit selection:** -

Min	Max	Factory setting
270 [V]	1500 [V]	660 [V]

Description: Sets the maximum steady-state DC link voltage. When the DC link voltage setpoint reaches the threshold, alarm A06800 is output.

The percentage setpoint for the DC link voltage in p3510 is limited to the value in p0280.

The voltage can be increased (boosted) using the modulation depth reserve controller. The modulation depth reserve (p3480) can be too low if p0210 (drive unit supply voltage) was incorrectly parameterized, a line overvoltage condition is present or a high reactive current is required.

© Siemens AG, 2005. All rights reserved

Dependency: Refer to: A06800

Warning! Before increasing the voltage limit for pulsed operation of a controlled booksize infeed with line supply voltages p0210 > 415 V it should be checked whether the motors, connected to the DC link, are specified for the higher motor voltages.

The warning information associated with p0210 must be carefully observed.

Caution! All motors connected to the DC link must be rated for the maximum DC-link voltage set in this parameter.

Note: A brief, dynamic increase of the DC link voltage does not result in an alarm.

p0281 Line supply overvoltage, warning threshold / U_LineAlrmThrsh up

A_INF, S_INF

Can be changed: T		**Access level:** 3
Data type: Floating Point	**Data set:** -	**Function diagram:** 8960
P-Group: Converter	**Units group:** PERCENT	**Unit selection:** -
Min	**Max**	**Factory setting**
100 [%]	200 [%]	110 [%]

Description: Sets the alarm threshold for a line supply overvoltage condition.

The setting is made as a percentage of the drive unit supply voltage (p0210).

Dependency: Refer to: p0211, p0221, p0222, p0223, p0224, p0225, p0226

Note: If synchronizing voltages are not detected, the line supply voltage is estimated using a model. It is therefore important to ensure that drive unit data is correctly specified.

p0282 Line supply undervoltage, alarm threshold / U_LineAlrmThrshLow

A_INF, S_INF

Can be changed: T		**Access level:** 3
Data type: Floating Point	**Data set:** -	**Function diagram:** 8960
P-Group: Converter	**Units group:** PERCENT	**Unit selection:** -
Min	**Max**	**Factory setting**
10 [%]	100 [%]	85 [%]

Description: Sets the alarm threshold for a line undervoltage condition.

The setting is made as a percentage of the drive unit supply voltage (p0210).

Dependency: Refer to: p0222, p0224, p0225, p0226, p3421, p3422

Refer to: A06105

Note: If synchronizing voltages are not detected, the line supply voltage is estimated using a model. It is therefore important to ensure that drive unit data is correctly specified.

p0283 Line supply undervoltage, shutdown (trip) threshold / U_line trip_thresh

A_INF, S_INF

Can be changed: C2(1), T		**Access level:** 3
Data type: Floating Point	**Data set:** -	**Function diagram:** 8960
P-Group: Converter	**Units group:** PERCENT	**Unit selection:** -
Min	**Max**	**Factory setting**
10 [%]	100 [%]	75 [%]

Description: Sets the trip threshold for the line supply undervoltage.

The setting is made as a percentage of the drive unit supply voltage (p0210).

Dependency: Refer to: p0282

Refer to: F06100

© Siemens AG, 2005. All rights reserved

p0284 Line supply frequency exceeded, alarm threshold / f_LineAlrmThrsh up

A_INF, S_INF

Can be changed: T		**Access level:** 3
Data type: Floating Point	**Data set:** -	**Function diagram:** 8964
P-Group: Converter	**Units group:** PERCENT	**Unit selection:** -
Min	**Max**	**Factory setting**
100.0 [%]	300.0 [%]	110.0 [%]

Description: Sets the alarm threshold for an excessively high line frequency.

Dependency: Set as a percentage of the rated line frequency.
Refer to: p0211

p0285 Line supply frequency fallen below, alarm threshold / f_LineAlrmThrshLow

A_INF, S_INF

Can be changed: T		**Access level:** 3
Data type: Floating Point	**Data set:** -	**Function diagram:** 8964
P-Group: Converter	**Units group:** PERCENT	**Unit selection:** -
Min	**Max**	**Factory setting**
0.0 [%]	100.0 [%]	90.0 [%]

Description: Sets the alarm threshold for an excessively low line frequency.

Dependency: Set as a percentage of the rated line frequency.
Refer to: p0211

p0287[0...1] Ground fault monitoring thresholds / Grnd flt thresh

A_INF, SERVO, S_INF, VECTOR

Can be changed: T		**Access level:** 3
Data type: Floating Point	**Data set:** -	**Function diagram:** -
P-Group: -	**Units group:** PERCENT	**Unit selection:** -
Min	**Max**	**Factory setting**
0.0 [%]	100.0 [%]	[0] 6.0 [%] [1] 16.0 [%]

Description: Sets the shutdown thresholds for the ground fault monitoring.
The setting is made as a percentage of the maximum power module current (r0209).

Index: [0] = Threshold for pulse inhibit
[1] = Threshold for pulse enable

Dependency: Refer to: F30021

Note: De-activating the ground fault monitoring:
- sequence: --> p0287[1] = 0 --> p0287[0] = 0
- independent of the firmware version of the power module.

Sets the thresholds:
- the prerequisite is at least firmware version 2.2 of the power module.

r0289 Maximum power module output current / PM I_output max

SERVO, VECTOR

Can be changed: -		**Access level:** 3
Data type: Floating Point	**Data set:** -	**Function diagram:** -
P-Group: Displays, signals	**Units group:** CURRENT_AC_EFF	**Unit selection:** -
Min	**Max**	**Factory setting**
- [Aeff]	- [Aeff]	- [Aeff]

Description: Displays the actual, maximum output current of the power module taking into account de-rating factors.

© Siemens AG, 2005. All rights reserved

p0290 Power module overload response / PM overld response

SERVO, VECTOR	**Can be changed:** T		**Access level:** 3
	Data type: Integer16	**Data set:** -	**Function diagram:** 8014
	P-Group: Converter	**Units group:** -	**Unit selection:** -
	Min	**Max**	**Factory setting**
	0	3	0

Description: Sets the response to a thermal overload condition of the power module.
The following quantities can result in a response to thermal overload:
- heatsink temperature (r0037.0)
- chip temperature (r0037.1)
- power module overload I2T (r0036)

Possible measures to avoid thermal overload:
- reduce the output current (closed-loop speed/velocity or torque/force control) or the output frequency (V/f control).
- reduce the pulse frequency (only for closed-loop VECTOR control).

A reduction, if parameterized, is always realized after an appropriate alarm is output.

Values:
0: Reduce output current or output frequency
1: No reduction, shutdown when overload threshold is reached
2: Reduce I_output or f_output and f_pulse (not using I2t)
3: Reduce the pulse frequency (not using I2t)

Dependency: If a sinusoidal filter is parameterized as output filter (p0230 = 3, 4), then only responses can be selected without pulse frequency reduction (p0290 = 0, 1).
If a fault or alarm is present, then r2135.13 or r2135.15 is set.
Refer to: r0036, r0037, p0108, r0108, p0230, r2135
Refer to: A05000, A05001, A07805

Cautiont: If the thermal overload of the power module is not sufficiently reduced by the actions taken, the drive is always shut down. This means that the power module is always protected independent of the setting of this parameter.

Note: The setting p0290 = 0, 2 is only practical if the load decreases with decreasing speed (e.g. for applications with variable torque such as for pumps and fans).
Under overload conditions, the current and torque limit are reduced, and therefore the motor is braked and forbidden speed ranges (e.g. minimum speed p1080 and suppression [skip] speeds p1091 ... p1094) can be passed through.
For p0290 = 2, 3, the I2t overload detection of the power module does not influence the responses.

p0294 Power module alarm with I2t overload / PM I2t alrm thresh

A_INF, SERVO, S_INF, VECTOR	**Can be changed:** U, T		**Access level:** 3
	Data type: Floating Point	**Data set:** -	**Function diagram:** 8014
	P-Group: Converter	**Units group:** PERCENT	**Unit selection:** -
	Min	**Max**	**Factory setting**
	10.0 [%]	100.0 [%]	95.0 [%]

Description: Sets the alarm threshold for the I2t power module overload.
Drive:
If this threshold is exceeded, an overload alarm is generated and the system responds as parameterized in p0290.
Infeed:
When the threshold value is exceeded, only an overload alarm is output.

Dependency: Refer to: r0036, p0290
Refer to: A07805

Note: The I2t fault threshold is 100 %. If this value is exceeded, fault F30005 is output.

© Siemens AG, 2005. All rights reserved

p0295 Fan run-on time / Fan run-on time

A_INF, B_INF, SERVO, S_INF, VECTOR

Can be changed: U, T		**Access level:** 1
Data type: Floating Point	**Data set:** -	**Function diagram:** -
P-Group: Converter	**Units group:** TIME	**Unit selection:** -
Min	**Max**	**Factory setting**
0 [s]	600 [s]	0 [s]

Description: Sets the run-on time of the fan after the power module is powered-down and a certain temperature is fallen below.

r0296 DC link voltage undervoltage threshold / Vdc U_lower_thresh

A_INF, B_INF, S_INF

Can be changed: -		**Access level:** 2
Data type: Unsigned16	**Data set:** -	**Function diagram:** -
P-Group: Converter	**Units group:** VOLTAGE_DC	**Unit selection:** -
Min	**Max**	**Factory setting**
- [V]	- [V]	- [V]

Description: If the DC link voltage falls below the threshold specified here, the drive unit is tripped due to a DC link undervoltage condition.

r0297 DC link voltage overvoltage threshold / Vdc U_upper_thresh

A_INF, B_INF, S_INF

Can be changed: -		**Access level:** 2
Data type: Unsigned16	**Data set:** -	**Function diagram:** -
P-Group: Converter	**Units group:** VOLTAGE_DC	**Unit selection:** -
Min	**Max**	**Factory setting**
- [V]	- [V]	- [V]

Description: If the DC link voltage exceeds the threshold specified here, the drive unit is tripped due to DC link overvoltage.

© Siemens AG, 2005. All rights reserved

p0300[0...n] Mot type selection / Mot type selection

SERVO	**Can be changed:** C2(1, 3)		**Access level:** 2
	Data type: Integer16	**Data set:** MDS	**Function diagram:** 6310
	P-Group: Motor	**Units group:** -	**Unit selection:** -
	Min	**Max**	**Factory setting**
	0	10000	0

Description: Selects the motor type or start to read-in the motor parameters for a motor with DRIVE-CLiQ (p0300 = 10000).

For p0300 < 10000, the following applies: The first digit of the parameter value always defines the general motor type and corresponds to the unlisted motor belonging to a motor list:

1 = Rotating induction motor

2 = Rotating synchronous motor

3 = Linear induction motor (reserved)

4 = Linear synchronous motor (reserved)

7 = SIEMOSYN motor (only VECTOR)

8 = Reluctance motor (only VECTOR)

The type information must be entered to filter motor-specific parameters and to optimize the operating characteristics and behavior. For example, for synchronous motors, power factor (p0308) is neither used nor displayed (in the BOP/AOP).

Values:

0: No motor selected
1: Induction motor (rotating)
2: Synchronous motor (rotating, permanent-magnet)
4: Synchronous motor (linear, permanent-magnet)
102: 1PH2 induction motor
104: 1PH4 induction motor
107: 1PH7 induction motor
134: 1PM4 induction motor
136: 1PM6 induction motor
206: 1FT6 synchronous motor
236: 1FK6 synchronous motor
237: 1FK7 synchronous motor
261: 1FE1 synchronous motor
276: 1FS6 synchronous motor
286: 1FW6 synchronous motor
291: 2SP1 synchronous motor
401: 1FN1 synchronous motor (linear)
403: 1FN3 synchronous motor (linear)
10000: Motor with DRIVE-CLiQ

Dependency: VECTOR: Motors, selection 206, 236, 237 cannot be operated (also not as motor with DRIVE-CLiQ).

When the motor type is changed, the code number in p0301 may be reset to 0.

Refer to: p0301

Note: For p0300 = 10000, the motor parameters are automatically downloaded for a motor with DRIVE-CLiQ.

If a motor type has not been selected (p0300 = 0), then the drive commissioning routine cannot be exited.

A motor type with a value above p0300 >= 100 describes motors for which a motor parameter list exists.

Motor types with a value below p0300 < 100 correspond to the selection of an unlisted motor. When appropriately selected, this means that the motor parameters are pre-assigned the settings for an unlisted motor.

If a catalog motor is selected (p0300 >= 100) and an associated motor code number (p0301), then the parameters, that are associated if this list, cannot be changed (write protection). The write protection is canceled if the motor type p0300 is set to a non-Siemens motor that matches p0301 (e.g. p0300 = 2 for p0301 = 2xxxx).

This also applies for parameters for a motor with DRIVE-CLiQ. In this case p0300 can only be set to p0300 = 10000 (read motor parameters) or to the corresponding non-Siemens motor (first digit of the motor code number) in order to be able to cancel the write protection.

© Siemens AG, 2005. All rights reserved

p0300[0...n] Mot type selection / Mot type selection

VECTOR	**Can be changed:** C2(1, 3)		**Access level:** 2
	Data type: Integer16	**Data set:** MDS	**Function diagram:** 6310
	P-Group: Motor	**Units group:** -	**Unit selection:** -
	Min	**Max**	**Factory setting**
	0	10000	0

Description: Selects the motor type or start to read-in the motor parameters for a motor with DRIVE-CLiQ (p0300 = 10000).

For p0300 < 10000, the following applies: The first digit of the parameter value always defines the general motor type and corresponds to the unlisted motor belonging to a motor list:

1 = Rotating induction motor

2 = Rotating synchronous motor

3 = Linear induction motor (reserved)

4 = Linear synchronous motor (reserved)

7 = SIEMOSYN motor (only VECTOR)

8 = Reluctance motor (only VECTOR)

The type information must be entered to filter motor-specific parameters and to optimize the operating characteristics and behavior. For example, for synchronous motors, power factor (p0308) is neither used nor displayed (in the BOP/AOP).

Values:

0: No motor selected
1: Induction motor (rotating)
2: Synchronous motor (rotating, permanent-magnet)
7: SIEMOSYN motor
8: Reluctance motor
11: 1LA1 standard induction motor
15: 1LA5 standard induction motor
16: 1LA6 standard induction motor
17: 1LA7 standard induction motor
18: 1LA8 standard induction motor
102: 1PH2 induction motor
104: 1PH4 induction motor
107: 1PH7 induction motor
134: 1PM4 induction motor
136: 1PM6 induction motor
10000: Motor with DRIVE-CLiQ

Dependency: VECTOR: Motors, selection 206, 236, 237 cannot be operated (also not as motor with DRIVE-CLiQ).

When the motor type is changed, the code number in p0301 may be reset to 0.

Refer to: p0301

Note: For p0300 = 10000, the motor parameters are automatically downloaded for a motor with DRIVE-CLiQ.

If a motor type has not been selected (p0300 = 0), then the drive commissioning routine cannot be exited.

A motor type with a value above p0300 >= 100 describes motors for which a motor parameter list exists.

Motor types with a value below p0300 < 100 correspond to the selection of an unlisted motor. When appropriately selected, this means that the motor parameters are pre-assigned the settings for an unlisted motor.

If a catalog motor is selected (p0300 >= 100) and an associated motor code number (p0301), then the parameters, that are associated if this list, cannot be changed (write protection). The write protection is canceled if the motor type p0300 is set to a non-Siemens motor that matches p0301 (e.g. p0300 = 2 for p0301 = 2xxxx).

This also applies for parameters for a motor with DRIVE-CLiQ. In this case p0300 can only be set to p0300 = 10000 (read motor parameters) or to the corresponding non-Siemens motor (first digit of the motor code number) in order to be able to cancel the write protection.

© Siemens AG, 2005. All rights reserved

p0301[0...n] Motor code number selection / Mot code No. sel

SERVO, VECTOR	**Can be changed:** C2(1, 3), U		**Access level:** 2
	Data type: Unsigned16	**Data set:** MDS	**Function diagram:** -
	P-Group: Motor	**Units group:** -	**Unit selection:** -
	Min	**Max**	**Factory setting**
	0	65535	0

Description: The parameter is used to select a motor from a motor parameter list.

When changing the code number (with the exception to the value 0), all of the motor parameters are pre-assigned from the internally available parameter lists.

Dependency: Only code numbers for motor types can be selected that correspond to the motor type selected in p0300. For 1PH2, 1PH4, 1PH7, 1PM4, 1PM6, 1FT6 motors, code numbers are also possible, whose fourth decimal position is greater by a value of 1 or 2 than the matching motor type in p0300. For 1FE1 motors, the third decimal position can be higher by a value of 1.

Refer to: p0300

Note: The motor code number can only be changed if the matching list motor was first selected in p0300.

For a motor with DRIVE-CLiQ, p0301 cannot be changed. In this case, p0301 is automatically written to the code number of the motor parameter read-in (r0302) if p0300 is set to 10000.

When selecting a list motor (p0300 >= 100), drive commissioning can only be exited if a code number is selected.

r0302[0...n] Motor code number of motor with DRIVE-CLiQ / Motor code Mot DLQ

SERVO, VECTOR	**Can be changed:** -		**Access level:** 2
	Data type: Unsigned16	**Data set:** MDS	**Function diagram:** -
	P-Group: Motor	**Units group:** -	**Unit selection:** -
	Min	**Max**	**Factory setting**
	-	-	-

Description: Displays the motor code number from the saved motor data from a motor with DRIVE-CLiQ.

Note: Drive commissioning can only be exited if the code number that was downloaded (r0302) matches the stored code number (p0301). If the numbers differ, then the motor data set should be re-loaded using p0300 = 10000.

The motor data are always expected from the first encoder that is assigned to the drive data sets (refer to p0187 = encoder 1) data set number.

p0304[0...n] Rated motor voltage / Mot U_rated

SERVO, VECTOR	**Can be changed:** C2(1, 3)		**Access level:** 1
	Data type: Floating Point	**Data set:** MDS	**Function diagram:** 6300, 6724
	P-Group: Motor	**Units group:** VOLTAGE_AC_EFF	**Unit selection:** -
	Min	**Max**	**Factory setting**
	0 [Veff]	20000 [Veff]	0 [Veff]

Description: Sets the rated motor voltage (rating plate).

Note: The parameter is automatically preset for motors from the motor list (p0301).

For synchronous motors (p0300 = 2xx), the parameter can be optionally input.

The following applies for SERVO:

For synchronous motors, the parameter is of no significance from a control-related perspective.

For VECTOR, the following applies:

if the rated voltage is entered for synchronous motors during the commissioning phase, then the stator leakage inductance (p0356, p0357) can be more accurately calculated (refer to p0340 and p3900).

© Siemens AG, 2005. All rights reserved

p0305[0...n] Rated motor current / Mot I_rated

SERVO, VECTOR	**Can be changed:** C2(1, 3)		**Access level:** 1
	Data type: Floating Point	**Data set:** MDS	**Function diagram:** 6300
	P-Group: Motor	**Units group:** CURRENT_AC_EFF	**Unit selection:** -
	Min	**Max**	**Factory setting**
	0.00 [Aeff]	10000.00 [Aeff]	0.00 [Aeff]

Description: Sets the rated motor current (rating plate).

Notice: For VECTOR, the following applies:
If the rated motor current exceeds twice the maximum drive converter current (r0209), then the maximum current is reduced due to the current harmonics that increase overproportionally (r0067).

Note: The parameter is automatically preset for motors from the motor list (p0301).
The parameter is not used for synchronous motors (p0300 = 2xx).

p0306[0...n] Number of motors connected in parallel / No. motors

SERVO	**Can be changed:** C2(1, 3)		**Access level:** 1
	Data type: Unsigned8	**Data set:** MDS	**Function diagram:** -
	P-Group: Motor	**Units group:** -	**Unit selection:** -
	Min	**Max**	**Factory setting**
	1	100	1

Description: Number of motors connected to a power module.
Internally, an equivalent motor is calculated dependent on the number of motors entered.
The following should be carefully observed for motors connected in series:
The following rating plate data should only be entered for one motor:
- resistances and inductances: p0350, p0352, p0353, p0354, p0356, p0357, p0358, p0360
- currents: p0305, p0318, p0320, p0323, p0325, p0329, p0338, p0391, p0392
- torques/forces: p0312, p0319
- power ratings: p0307
- masses/moments of inertia: p0341, p0344

All other parameters take into account the replacement/equivalent motor (e.g. r0331, r0370, r0373, r0374).

Dependency: Refer to: r0331, r0370, r0373, r0374, r0376, r0377, r0382

Caution! The motors to be connected-up in parallel, must be of the same type.
The mounting regulations when connecting motors in parallel must be carefully maintained!
The number of motors set must correspond to the number of motors that are actually connected in parallel.
After changing p0306, it is imperative that the control parameters are adapted (e.g. using automatic calculation with p0340 = 1).

Note: Only possible for SERVO!

p0307[0...n] Rated motor power / Mot P_rated

SERVO, VECTOR	**Can be changed:** C2(1, 3)		**Access level:** 1
	Data type: Floating Point	**Data set:** MDS	**Function diagram:** -
	P-Group: Motor	**Units group:** POWER_P3	**Unit selection:** -
	Min	**Max**	**Factory setting**
	0.00 [kW]	100000.00 [kW]	0.00 [kW]

Description: Sets the rated motor power (rating plate).

Dependency: IEC drives (p0100 = 0): Units, kW
NEMA drives (p0100 = 1): Units, hp
Refer to: p0100

Note: The parameter is automatically preset for motors from the motor list (p0301).

© Siemens AG, 2005. All rights reserved

p0308[0...n] Rated motor power factor / Mot CosPhi_rated

SERVO, VECTOR	**Can be changed:** C2(1, 3)		**Access level:** 1
	Data type: Floating Point	**Data set:** MDS	**Function diagram:** -
	P-Group: Motor	**Units group:** -	**Unit selection:** -
	Min	**Max**	**Factory setting**
	0.000	1.000	0.000

Description: Sets the rated motor power factor cos phi (rating plate).
For a parameter value of 0.000, the power factor is internally calculated and displayed in r0332.

Dependency: This parameter is only available for IEC motors (p0100 = 0).
Refer to: p0100, p0309, r0332

Note: The parameter is not used for synchronous motors (p0300 = 2xx).
The parameter is automatically preset for motors from the motor list (p0301).

p0309[0...n] Rated motor efficiency / Mot eta_rated

VECTOR	**Can be changed:** C2(1, 3)		**Access level:** 1
	Data type: Floating Point	**Data set:** MDS	**Function diagram:** -
	P-Group: Motor	**Units group:** PERCENT	**Unit selection:** -
	Min	**Max**	**Factory setting**
	0.0 [%]	99.9 [%]	0.0 [%]

Description: Sets the rated motor efficiency (rating plate).
For a parameter value of 0.0, the power factor is internally calculated and displayed in r0332.

Dependency: This parameter is only available for NEMA motors (p0100 = 1).
Refer to: p0100, p0308, r0332

Note: The parameter is not used for synchronous motors (p0300 = 2xx).
The parameter is automatically preset for motors from the motor list (p0301).

p0310[0...n] Rated motor frequency / Mot f_rated

SERVO, VECTOR	**Can be changed:** C2(1, 3)		**Access level:** 1
	Data type: Floating Point	**Data set:** MDS	**Function diagram:** 6300
	P-Group: Motor	**Units group:** FREQUENCY	**Unit selection:** -
	Min	**Max**	**Factory setting**
	0.00 [Hz]	3000.00 [Hz]	0.00 [Hz]

Description: Sets the rated motor frequency (rating plate).

Dependency: The number of pole pairs (r0313) is automatically re-calculated when the parameter is changed (together with p0311), if p0314 = 0.
Only for VECTOR drives (refer to p0107):
The rated frequency is restricted to values between 1.00 Hz and 650.00 Hz.
Refer to: p0311, r0313, p0314

Note: The parameter is automatically pre-assigned for induction motors from the motor list (p0301).
For synchronous motors, the parameter is not required and must therefore be pre-assigned zero. For p0310 = 0, it is not possible to calculate the pole pair; instead, it must be entered in p0314.

© Siemens AG, 2005. All rights reserved

p0311[0...n] Rated motor speed / Mot n_rated

SERVO, VECTOR	**Can be changed:** C2(1, 3)		**Access level:** 1
	Data type: Floating Point	**Data set:** MDS	**Function diagram:** -
	P-Group: Motor	**Units group:** SPEED_ROT	**Unit selection:** -
	Min	**Max**	**Factory setting**
	0.0 [1/min]	210000.0 [1/min]	0.0 [1/min]

Description: Sets the rated motor speed/velocity (rating plate).
For VECTOR drives (refer to p0107):
For p0311 = 0, the rated motor slip of induction motors is internally calculated and displayed in r0330.
It is especially important to correctly enter the rated motor speed for closed-loop VECTOR control and slip compensation for V/f control.

Dependency: The following applies for rotating motors:
If p0311 is changed and for p0314 = 0, the pole pair (r0313) is re-calculated automatically.
The following applies for linear motors:
The pole pair width is set in p0315.
Refer to: p0310, r0313, p0314

Note: The parameter is automatically preset for motors from the motor list (p0301).

p0311[0...n] Rated motor velocity / Mot n_rated

SERVO (Lin)	**Can be changed:** C2(1, 3)		**Access level:** 1
	Data type: Floating Point	**Data set:** MDS	**Function diagram:** -
	P-Group: Motor	**Units group:** SPEED_LIN_METRIC_P3	**Unit selection:** -
	Min	**Max**	**Factory setting**
	0.0 [m/min]	6000.0 [m/min]	0.0 [m/min]

Description: Sets the rated motor speed/velocity (rating plate).
For VECTOR drives (refer to p0107):
For p0311 = 0, the rated motor slip of induction motors is internally calculated and displayed in r0330.
It is especially important to correctly enter the rated motor speed for closed-loop VECTOR control and slip compensation for V/f control.

Dependency: The following applies for rotating motors:
If p0311 is changed and for p0314 = 0, the pole pair (r0313) is re-calculated automatically.
The following applies for linear motors:
The pole pair width is set in p0315.
Refer to: p0310, r0313, p0314

Note: The parameter is automatically preset for motors from the motor list (p0301).

p0312[0...n] Rated motor torque / Mot M_rated

SERVO	**Can be changed:** C2(3)		**Access level:** 3
	Data type: Floating Point	**Data set:** MDS	**Function diagram:** -
	P-Group: Motor	**Units group:** TORQUE	**Unit selection:** -
	Min	**Max**	**Factory setting**
	0.00 [Nm]	1000000.00 [Nm]	0.00 [Nm]

Description: Sets the motor rated torque/force (rating plate).

Note: The parameter is automatically preset for motors from the motor list (p0301).

© Siemens AG, 2005. All rights reserved

p0312[0...n] Rated motor force / Mot M_rated

SERVO (Lin)	**Can be changed:** C2(3)		**Access level:** 3
	Data type: Floating Point	**Data set:** MDS	**Function diagram:** -
	P-Group: Motor	**Units group:** FORCE	**Unit selection:** -
	Min	**Max**	**Factory setting**
	0.00 [N]	1000000.00 [N]	0.00 [N]

Description: Sets the motor rated torque/force (rating plate).

Note: The parameter is automatically preset for motors from the motor list (p0301).

r0313[0...n] Motor pole pair number, actual (or calculated) / Mot PolePairNo act

SERVO, VECTOR	**Can be changed:** -		**Access level:** 3
	Data type: Unsigned8	**Data set:** MDS	**Function diagram:** 5300
	P-Group: Motor	**Units group:** -	**Unit selection:** -
	Min	**Max**	**Factory setting**
	-	-	-

Description: Displays the number of motor pole pairs. The value is used for internal calculations.
Values:
r0313 = 1: 2-pole motor
r0313 = 2: 4-pole motor
etc.

Dependency: For p0314 > 0, the entered value is displayed in r0313.
For p0314 = 0, the pole pair number (r0313) is automatically calculated from the rated frequency (p0310) and the rated speed (p0311).
Refer to: p0310, p0311, p0314

Note: For the automatic calculation, the pole pair number is set to the value of 2 if the rated speed or the rated frequency is zero.

p0314[0...n] Motor pole pair number / Mot pole pair No.

SERVO, VECTOR	**Can be changed:** C2(1, 3)		**Access level:** 2
	Data type: Unsigned8	**Data set:** MDS	**Function diagram:** -
	P-Group: Motor	**Units group:** -	**Unit selection:** -
	Min	**Max**	**Factory setting**
	0	127	0

Description: Sets the motor pole pair number.
Values:
p0314 = 1: 2-pole motor
p0314 = 2: 4-pole motor
etc.

Dependency: For p0314 = 0, the pole pair number is automatically calculated from the rated frequency (p0310) and the rated speed (p0311) and displayed in r0313.

Notice: For induction motors, the value need only be input if the rated data of a generator is entered therefore resulting in a negative rated slip. In this case, the number of pole pairs in r0313 is too low by 1 and must be manually corrected.

© Siemens AG, 2005. All rights reserved

p0315[0...n] Motor pole pair width / MotPolePair width

SERVO, VECTOR	**Can be changed:** C2(1, 3)		**Access level:** 1
	Data type: Floating Point	**Data set:** MDS	**Function diagram:** -
	P-Group: Motor	**Units group:** LENGTH_M3	**Unit selection:** -
	Min	**Max**	**Factory setting**
	1.00 [mm]	1000.00 [mm]	30.00 [mm]

Description: Sets the pole pair width of the linear motor.

Note: The parameter is automatically preset for motors from the motor list (p0301).

p0316[0...n] Motor torque constant / Mot kT

SERVO, VECTOR	**Can be changed:** C2(1, 3), U, T		**Access level:** 2
	Data type: Floating Point	**Data set:** MDS	**Function diagram:** -
	P-Group: Motor	**Units group:** TORQUE_PER_CURR	**Unit selection:** -
	Min	**Max**	**Factory setting**
	0.00 [Nm/A]	100.00 [Nm/A]	0.00 [Nm/A]

Description: Sets the torque/force constant of the synchronous motor.
p0316 = 0: The torque/force constant is calculated from the motor data.
p0316 > 0: The selected value is used as torque/force constant.

Dependency: Refer to: r0334

Note: The parameter is automatically preset for motors from the motor list (p0301).
This parameter is not used for induction motors (p0300 = 1xx).

p0316[0...n] Motor force constant / Mot kT

SERVO (Lin)	**Can be changed:** C2(1, 3), U, T		**Access level:** 2
	Data type: Floating Point	**Data set:** MDS	**Function diagram:** -
	P-Group: Motor	**Units group:** FORCE_PER_CURR	**Unit selection:** -
	Min	**Max**	**Factory setting**
	0.00 [N/Aeff]	1000.00 [N/Aeff]	0.00 [N/Aeff]

Description: Sets the torque/force constant of the synchronous motor.
p0316 = 0: The torque/force constant is calculated from the motor data.
p0316 > 0: The selected value is used as torque/force constant.

Dependency: Refer to: r0334

Note: The parameter is automatically preset for motors from the motor list (p0301).
This parameter is not used for induction motors (p0300 = 1xx).

p0317[0...n] Motor voltage constant / Mot kE

SERVO	**Can be changed:** C2(3)		**Access level:** 3
	Data type: Floating Point	**Data set:** MDS	**Function diagram:** -
	P-Group: Motor	**Units group:** VOLTAGE_AC_EFF	**Unit selection:** -
	Min	**Max**	**Factory setting**
	0.0 [Veff]	10000.0 [Veff]	0.0 [Veff]

Description: Sets the voltage constant for synchronous motors.
Units for rotating synchronous motors: Vrms/(1000 RPM), phase-to-phase
Units for linear synchronous motors: Vrms s/m, phase

Note: The parameter is automatically preset for motors from the motor list (p0301).
This parameter is not used for induction motors (p0300 = 1xx).

© Siemens AG, 2005. All rights reserved

p0317[0...n] Motor voltage constant / Mot kE

SERVO (Lin)	**Can be changed:** C2(3)		**Access level:** 3
	Data type: Floating Point	**Data set:** MDS	**Function diagram:** -
	P-Group: Motor	**Units group:** FLUX_PER_METER	**Unit selection:** -
	Min	**Max**	**Factory setting**
	0.0 [Veff s/m]	1000.0 [Veff s/m]	0.0 [Veff s/m]

Description: Sets the voltage constant for synchronous motors.
Units for rotating synchronous motors: Vrms/(1000 RPM), phase-to-phase
Units for linear synchronous motors: Vrms s/m, phase

Note: The parameter is automatically preset for motors from the motor list (p0301).
This parameter is not used for induction motors (p0300 = 1xx).

p0318[0...n] Motor stall current / Mot I_standstill

SERVO	**Can be changed:** C2(3)		**Access level:** 3
	Data type: Floating Point	**Data set:** MDS	**Function diagram:** -
	P-Group: Motor	**Units group:** CURRENT_AC_EFF	**Unit selection:** -
	Min	**Max**	**Factory setting**
	0.00 [Aeff]	10000.00 [Aeff]	0.00 [Aeff]

Description: Sets the stall current for synchronous motors (p0300 = 2xx).

Note: The parameter is automatically preset for motors from the motor list (p0301).
This parameter is not used for induction motors (p0300 = 1xx).
This parameter value is not evaluated from a control-related perspective.

p0319[0...n] Motor stall torque / Mot M_standstill

SERVO	**Can be changed:** C2(3)		**Access level:** 3
	Data type: Floating Point	**Data set:** MDS	**Function diagram:** -
	P-Group: Motor	**Units group:** TORQUE	**Unit selection:** -
	Min	**Max**	**Factory setting**
	0.0 [Nm]	100000.0 [Nm]	0.0 [Nm]

Description: Sets the stall (standstill) torque/force for synchronous motors (p0300 = 2xx, 4xx).

Note: The parameter is automatically preset for motors from the motor list (p0301).
This parameter is not used for induction motors (p0300 = 1xx).
This parameter value is not evaluated from a control-related perspective.

p0319[0...n] Motor stall force / Mot M_standstill

SERVO (Lin)	**Can be changed:** C2(3)		**Access level:** 3
	Data type: Floating Point	**Data set:** MDS	**Function diagram:** -
	P-Group: Motor	**Units group:** FORCE	**Unit selection:** -
	Min	**Max**	**Factory setting**
	0.0 [N]	100000.0 [N]	0.0 [N]

Description: Sets the stall (standstill) torque/force for synchronous motors (p0300 = 2xx, 4xx).

Note: The parameter is automatically preset for motors from the motor list (p0301).
This parameter is not used for induction motors (p0300 = 1xx).
This parameter value is not evaluated from a control-related perspective.

© Siemens AG, 2005. All rights reserved

p0320[0...n] Motor rated magnetization current/short-circuit current / Mot I_mag_rated

SERVO, VECTOR	**Can be changed:** C2(3), U, T		**Access level:** 3
	Data type: Floating Point	**Data set:** MDS	**Function diagram:** 5722
	P-Group: Motor	**Units group:** CURRENT_AC_EFF	**Unit selection:** -
	Min	**Max**	**Factory setting**
	0.000 [Aeff]	5000.000 [Aeff]	0.000 [Aeff]

Description: Induction motors:
Sets the rated motor magnetizing current.
For p0320 = 0.000 the magnetizing current is internally calculated and displayed in r0331.
Synchronous motors:
Sets the rated motor short-circuit current.

Note: The parameter is automatically preset for motors from the motor list (p0301).

p0322[0...n] Maximum motor speed / Mot n_max

SERVO, VECTOR	**Can be changed:** C2(1, 3)		**Access level:** 2
	Data type: Floating Point	**Data set:** MDS	**Function diagram:** -
	P-Group: Motor	**Units group:** SPEED_ROT	**Unit selection:** -
	Min	**Max**	**Factory setting**
	0.0 [1/min]	210000.0 [1/min]	0.0 [1/min]

Description: Sets the maximum motor speed/velocity.

Dependency: Refer to: p1082

Note: The parameter is automatically preset for motors from the motor list (p0301).

p0322[0...n] Motor velocity, maximum / Mot n_max

SERVO (Lin)	**Can be changed:** C2(1, 3)		**Access level:** 2
	Data type: Floating Point	**Data set:** MDS	**Function diagram:** -
	P-Group: Motor	**Units group:** SPEED_LIN_METRIC_P3	**Unit selection:** -
	Min	**Max**	**Factory setting**
	0.0 [m/min]	1000.0 [m/min]	0.0 [m/min]

Description: Sets the maximum motor speed/velocity.

Dependency: Refer to: p1082

Note: The parameter is automatically preset for motors from the motor list (p0301).

p0323[0...n] Maximum motor current / Mot I_max

SERVO, VECTOR	**Can be changed:** C2(1, 3)		**Access level:** 2
	Data type: Floating Point	**Data set:** MDS	**Function diagram:** 5722
	P-Group: Motor	**Units group:** CURRENT_AC_EFF	**Unit selection:** -
	Min	**Max**	**Factory setting**
	0.00 [Aeff]	20000.00 [Aeff]	0.00 [Aeff]

Description: Set the maximum permissible motor current (e.g. de-magnetizing current for synchronous motors).

Note: The parameter is automatically preset for motors from the motor list (p0301).
For induction motors, the parameter has not effect if p0323 is set to 0.
For synchronous motors, a value must always be entered for the maximum motor current.
p0323 is a motor data. The user-selectable current limit is entered into p0640.

© Siemens AG, 2005. All rights reserved

p0325[0...n] Pole position identification current, 1st phase / Pol-ID I 1st ph

SERVO, VECTOR	**Can be changed:** U, T		**Access level:** 3
	Data type: Floating Point	**Data set:** MDS	**Function diagram:** -
	P-Group: Motor	**Units group:** CURRENT_AC_EFF	**Unit selection:** -
	Min	**Max**	**Factory setting**
	0.000 [Aeff]	10000.000 [Aeff]	0.000 [Aeff]

Description: Sets the current for the 1st phase of the two-stage technique for pole position identification routine.
The current of the 2nd phase is set in p0329.
A two-stage technique is selected with p1980 = 4, 5.

Dependency: Refer to: p0329, p1980, p1981, p1982, p1983, r1984, r1985, r1987, p1990
Refer to: F07995

Notice: When the motor code (p0301) is changed, it is possible that p0325 is not pre-assigned.
p0325 can be pre-assigned using p0340 = 3.

Note: The value is automatically pre-assigned for the following events:
- For p0325 = 0 and automatic calculation of the closed-loop control parameters (p0340 = 1, 2, 3).
- for quick commissioning (p3900 = 1, 2, 3).

p0326[0...n] Stall torque correction factor / Mot M_stallCorrFac

SERVO	**Can be changed:** C2(3), U, T		**Access level:** 3
	Data type: Floating Point	**Data set:** MDS	**Function diagram:** -
	P-Group: Motor	**Units group:** PERCENT	**Unit selection:** -
	Min	**Max**	**Factory setting**
	5 [%]	300 [%]	60 [%]

Description: Sets the correction factor for the stall torque/force at a 600 V DC link voltage.

Note: The parameter is automatically preset for motors from the motor list (p0301).

p0327[0...n] PE spindle, optimum load angle / Mot load angle opt

SERVO	**Can be changed:** C2(3), U, T		**Access level:** 3
	Data type: Floating Point	**Data set:** MDS	**Function diagram:** 5722
	P-Group: Motor	**Units group:** ANGLE	**Unit selection:** -
	Min	**Max**	**Factory setting**
	0.0 [°]	135.0 [°]	90.0 [°]

Description: Sets the optimum load angle for synchronous motors with reluctance torque (e.g. 1FE ... motors).
This parameter has no significance for induction motors.

Note: For synchronous motors without reluctance torque, a angle of 90 degrees must be set.
The parameter is automatically preset for motors from the motor list (p0301).

p0328[0...n] PE spindle, reluctance torque constant / Mot kT_reluctance

SERVO, VECTOR	**Can be changed:** C2(3), U, T		**Access level:** 3
	Data type: Floating Point	**Data set:** MDS	**Function diagram:** -
	P-Group: Motor	**Units group:** INDUCTANCE_M3	**Unit selection:** -
	Min	**Max**	**Factory setting**
	0.00 [mH]	1000.00 [mH]	0.00 [mH]

Description: Sets the reluctance torque constant for synchronous motors with reluctance torque (e.g. 1FE ... motors).
This parameter has no significance for induction motors.

Note: For synchronous motors without reluctance torque, the value 0 must be set.
The parameter is automatically preset for motors from the motor list (p0301).

© Siemens AG, 2005. All rights reserved

p0329[0...n] Pole position identification current / Mot PolID curr

SERVO, VECTOR	**Can be changed:** C2(3), U, T		**Access level:** 3
	Data type: Floating Point	**Data set:** MDS	**Function diagram:** -
	P-Group: Motor	**Units group:** CURRENT_AC_EFF	**Unit selection:** -
	Min	**Max**	**Factory setting**
	0.00 [Aeff]	10000.00 [Aeff]	0.00 [Aeff]

Description: Sets the current for the pole position identification routine.
For a two-stage technique, the current is set for the second phase.

Dependency: Refer to: p0325, p1980, p1981, p1982, p1983, r1984, r1985, r1987, p1990
Refer to: F07995

Note: The parameter is automatically preset for motors from the motor list (p0301).

r0330[0...n] Rated motor slip / Mot slip_rated

SERVO, VECTOR	**Can be changed:** -		**Access level:** 3
	Data type: Floating Point	**Data set:** MDS	**Function diagram:** -
	P-Group: Motor	**Units group:** FREQUENCY	**Unit selection:** -
	Min	**Max**	**Factory setting**
	- [Hz]	- [Hz]	- [Hz]

Description: Displays the rated motor slip.

Dependency: The rated slip is calculated from the rated frequency, rated speed and number of pole pairs.
Refer to: p0310, p0311, r0313

Note: The parameter is not used for synchronous motors (p0300 = 2xx).

r0331[0...n] Motor magnetizing current/short-circuit current (actual) / Mot I_mag_ratedAct

SERVO, VECTOR	**Can be changed:** -		**Access level:** 3
	Data type: Floating Point	**Data set:** MDS	**Function diagram:** 5722, 6722, 6724
	P-Group: Motor	**Units group:** CURRENT_AC_EFF	**Unit selection:** -
	Min	**Max**	**Factory setting**
	- [Aeff]	- [Aeff]	- [Aeff]

Description: Induction motor:
Displays the rated magnetizing current from p0320.
For p0320 = 0, the internally calculated magnetizing current is displayed.
Synchronous motor:
Displays the rated shirt-circuit current from p0320.

Dependency: If p0320 was not entered, then the parameter is calculated from the rating plate parameters.

r0332[0...n] Rated motor power factor / Mot CosPhi_rated

SERVO, VECTOR	**Can be changed:** -		**Access level:** 3
	Data type: Floating Point	**Data set:** MDS	**Function diagram:** -
	P-Group: Motor	**Units group:** -	**Unit selection:** -
	Min	**Max**	**Factory setting**
	-	-	-

Description: Displays the rated power factor for induction motors.
For IEC motors, the following applies (p0100 = 0):
For p0308 = 0, the internally-calculated power factor is displayed.
For p0308 > 0, this value is displayed.
For NEMA motors, the following applies (p0100 = 1):
For p0309 = 0, the internally-calculated power factor is displayed.
For p0309 > 0, this value is converted into the power factor and displayed.

© Siemens AG, 2005. All rights reserved

Dependency: If p0308 is not entered, the parameter is calculated from the rating plate parameters.
Note: The parameter is not used for synchronous motors (p0300 = 2xx).

r0333[0...n] Rated motor torque / Mot M_rated

SERVO, VECTOR

Can be changed: -		**Access level:** 3
Data type: Floating Point	**Data set:** MDS	**Function diagram:** -
P-Group: Motor	**Units group:** TORQUE	**Unit selection:** -
Min	**Max**	**Factory setting**
- [Nm]	- [Nm]	- [Nm]

Description: Displays the motor rated torque/force.
Note: For induction and reluctance motors, r0333 is calculated from p0307 and p0311.
For synchronous motors, r0333 is calculated from p0305, p0316, p0327 and p0328. The result can deviate from the input in p0312. If p0316 = 0, then r0333 = p0312 is displayed.

r0333[0...n] Rated motor force / Mot M_rated

SERVO (Lin)

Can be changed: -		**Access level:** 3
Data type: Floating Point	**Data set:** MDS	**Function diagram:** -
P-Group: Motor	**Units group:** FORCE	**Unit selection:** -
Min	**Max**	**Factory setting**
- [N]	- [N]	- [N]

Description: Displays the motor rated torque/force.
Note: For induction and reluctance motors, r0333 is calculated from p0307 and p0311.
For synchronous motors, r0333 is calculated from p0305, p0316, p0327 and p0328. The result can deviate from the input in p0312. If p0316 = 0, then r0333 = p0312 is displayed.

r0334[0...n] Motor-torque constant, actual / Mot kT act

SERVO, VECTOR

Can be changed: -		**Access level:** 3
Data type: Floating Point	**Data set:** MDS	**Function diagram:** -
P-Group: Motor	**Units group:** TORQUE_PER_CURR	**Unit selection:** -
Min	**Max**	**Factory setting**
- [Nm/A]	- [Nm/A]	- [Nm/A]

Description: Displays the torque/force constant of the synchronous motor used.
Dependency: Refer to: p0316
Note: This parameter is not used for induction motors (p0300 = 1xx).
For synchronous motors, parameter r0334 = p0316 is displayed. if p0316 = 0, r0334 is calculated from p0305 and p0312.

r0334[0...n] Motor force constant, actual / Mot kT act

SERVO (Lin)

Can be changed: -		**Access level:** 3
Data type: Floating Point	**Data set:** MDS	**Function diagram:** -
P-Group: Motor	**Units group:** FORCE_PER_CURR	**Unit selection:** -
Min	**Max**	**Factory setting**
- [N/Aeff]	- [N/Aeff]	- [N/Aeff]

Description: Displays the torque/force constant of the synchronous motor used.
Dependency: Refer to: p0316
Note: This parameter is not used for induction motors (p0300 = 1xx).
For synchronous motors, parameter r0334 = p0316 is displayed. if p0316 = 0, r0334 is calculated from p0305 and p0312.

© Siemens AG, 2005. All rights reserved

p0335[0...n] Motor cooling type / Motor cooling type

SERVO, VECTOR	**Can be changed:** C2(1, 3), T		**Access level:** 1
	Data type: Integer16	**Data set:** MDS	**Function diagram:** -
	P-Group: Motor	**Units group:** -	**Unit selection:** -
	Min	**Max**	**Factory setting**
	0	6	0

Description: Sets the motor cooling system used.

Values:
0: Non-ventilated
1: Forced-ventilated
2: Water cooling
4: Non-ventilated and internal fan
5: Forced-ventilated and internal fan
6: Water cooling and internal fan

Note: The parameter influences the thermal 3-mass motor model.
1LA1 and 1LA8 motors are characterized by the fact that they have an internal rotor fan.
The parameter is automatically preset for motors from the motor list (p0301).

r0336[0...n] Rated motor frequency (actual) / Mot f_rated act

SERVO, VECTOR	**Can be changed:** -		**Access level:** 3
	Data type: Floating Point	**Data set:** MDS	**Function diagram:** -
	P-Group: Motor	**Units group:** FREQUENCY	**Unit selection:** -
	Min	**Max**	**Factory setting**
	- [Hz]	- [Hz]	- [Hz]

Description: Displays the rated frequency of the motor.
For p0310 > 0, this value is displayed.

Dependency: Refer to: p0311, p0314

Note: For p0310 = 0 or for synchronous motors, the rated motor frequency r0336 is calculated from the rated speed and the pole pair number.
For p0310 > 0, this value is displayed (not for synchronous motors).

r0337[0...n] Rated motor EMF / Mot EMF_rated

SERVO, VECTOR	**Can be changed:** -		**Access level:** 3
	Data type: Floating Point	**Data set:** MDS	**Function diagram:** -
	P-Group: Motor	**Units group:** VOLTAGE_AC_EFF	**Unit selection:** -
	Min	**Max**	**Factory setting**
	- [Veff]	- [Veff]	- [Veff]

Description: Displays the rated EMF of the motor.

Note: EMF: Electromagnetic force

r0337[0...n] Rated motor EMF / Mot EMF_rated

SERVO (Lin)	**Can be changed:** -		**Access level:** 3
	Data type: Floating Point	**Data set:** MDS	**Function diagram:** -
	P-Group: Motor	**Units group:** FLUX_PER_METER	**Unit selection:** -
	Min	**Max**	**Factory setting**
	- [Veff s/m]	- [Veff s/m]	- [Veff s/m]

Description: Displays the rated EMF of the motor.

Note: EMF: Electromagnetic force

© Siemens AG, 2005. All rights reserved

p0338[0...n] Motor limit current / Mot I_limit

SERVO	**Can be changed:** C2(1, 3)		**Access level:** 2
	Data type: Floating Point	**Data set:** MDS	**Function diagram:** -
	P-Group: Motor	**Units group:** CURRENT_AC_EFF	**Unit selection:** -
	Min	**Max**	**Factory setting**
	0.00 [Aeff]	10000.00 [Aeff]	0.00 [Aeff]

Description: Sets the motor limit current for synchronous motors (for a 600 V DC link voltage).
Using this current, the maximum torque is achieved at the rated speed (voltage limit characteristic).

Note: The parameter is automatically preset for motors from the motor list (p0301).

r0339[0...n] Rated motor voltage / Mot V_rated

SERVO, VECTOR	**Can be changed:** -		**Access level:** 3
	Data type: Floating Point	**Data set:** MDS	**Function diagram:** -
	P-Group: Motor	**Units group:** VOLTAGE_AC_EFF	**Unit selection:** -
	Min	**Max**	**Factory setting**
	- [Veff]	- [Veff]	- [Veff]

Description: Displays the rated motor voltage

Note: For induction motors (p0300 = 1xx) the parameter is set to p0304.
For synchronous motors, parameter r0339 = p0304 is displayed. If p0304 = 0, then r0339 is calculated from p0305 and p0316.

p0340 Automatic calculation, control parameters / Calc auto par

A_INF, S_INF	**Can be changed:** T		**Access level:** 3
	Data type: Integer16	**Data set:** -	**Function diagram:** -
	P-Group: Closed-loop control	**Units group:** -	**Unit selection:** -
	Min	**Max**	**Factory setting**
	0	2	0

Description: Setting to reset and automatically calculate filter and control (closed-loop) parameters.

Values:
0: No calculation
1: Complete re-calculation. of control parameters with COMM data
2: Reset control parameters

Notice: The following parameters are influenced using p0340:
p0340 = 1:
--> All of the parameters influenced for p0340 = 2
--> p3421 = p0223 + p0225
--> p3422 = p0227
p0340 = 2:
--> p3560, p3562, p3564, p3603, p3615 and p3617 are reset to the factory setting. These controller parameters are not available for S_Infeed.

Note: When existing the quick commissioning using p3900 = 1 or 2, p0340 is automatically set to 1.
At the end of the calculations, p0340 is automatically set to 0.

© Siemens AG, 2005. All rights reserved

p0340[0...n] Automatic calculation of motor/control parameters / Calc auto par

SERVO, VECTOR	**Can be changed:** C2(3), T		**Access level:** 2
	Data type: Integer16	**Data set:** DDS	**Function diagram:** -
	P-Group: Motor	**Units group:** -	**Unit selection:** -
	Min	**Max**	**Factory setting**
	0	5	0

Description: Setting to automatically calculate motor parameters and V/f open-loop and closed-loop control parameters from the rating plate data.

Values:
0: No calculation
1: Complete calculation
2: Calculation of equivalent circuit diagram parameters
3: Calculation of closed-loop control parameters
4: Calculation of controller parameters
5: Calculation of technological limits and threshold values

Notice: The following parameters are influenced using p0340:

The parameters designated with (*) are, for list motors (p0300 > 100) not overwritten.

SERVO:

p0340 = 1:

--> All of the parameters influenced for p0340 = 2, 3, 4, 5

--> p0341 (*)

--> p0342, p0344, p0640, p1082, p2000, p2001, p2002, p2003

p0340 = 2:

--> p0350 (*), p0354 (*), p0356 (*), p0358 (*), p0360 (*)

--> p0625 (matching p0350)

p0340 = 3:

--> All of the parameters influenced for p0340 = 4, 5

--> p0325 (is only calculated for p0325 = 0)

--> p0348 (*) (is only calculated for p0348 = 0)

--> p0441, p0442, p0443, p0444, p0445 (only for 1FT6, 1FK6, 1FK7 motors)

--> p0492, p1082, p1980, p1319, p1326, p1327, p1612, p1752, p1755

p0340 = 4:

--> p1460, p1462, p1463, p1464, p1465, p1470, p1472, p1590, p1592, p1715, p1717

--> p1461 (for p0348 > p0322, p1461 is set to 100 %)

--> p1463 (for p0348 > p0322, p1463 is set to 400 %)

p0340 = 5:

--> p1037, p1038, p1520, p1521, p1530, p1531, p2140, p2142, p2150, p2162, p2163, p2164, p2175, p2177, p2194

© Siemens AG, 2005. All rights reserved

VECTOR:

p0340 = 1:

--> All of the parameters influenced for p0340 = 2, 3, 4, 5

--> p0341 (*)

--> p0342, p0344, p0640, p1082, p1654, p1825, p1828, p1829, p1830, p1831, p1832, p1905, p2000, p2001, p2002, p2003

p0340 = 2:

--> p0350 (*), p0352, p0354 (*), p0356 (*), p0358 (*), p0360 (*)

--> p0625 (matching p0350)

p0340 = 3:

--> All of the parameters influenced for p0340 = 4, 5

--> p0346, p0347, p0492, p1320, p1321, p1322, p1323, p1324, p1325, p1326, p1327, p1582, p1584, p1616, p1744, p1755, p1756, p2178

p0340 = 4:

--> p1290, p1292, p1293, p1299, p1338, p1339, p1340, p1341, p1345, p1346, p1460, p1461, p1462, p1463, p1464, p1465, p1470, p1472, p1590, p1592, p1715, p1717, p1740, p1760, p1761, p1764, p1767, p1781, p1783, p1785, p1786

p0340 = 5:

--> p1037, p1038, p1520, p1521, p1530, p1531, p1802, p1803, p2140, p2142, p2150, p2162, p2163, p2164, p2175, p2177, p2194

Note: p0340 = 1 contains the calculations of p0340 = 2, 3, 4, 5 without overwriting the motor parameters from the Siemens motor lists (p0301 > 0).

p0340 = 2 calculates the motor parameters (p0350 ... p0360), but only if it does involve a Siemens catalog motor (p0301 = 0).

p0340 = 3 contains the calculations of p0340 = 4, 5.

p0340 = 4 only calculates the controller parameters.

p0340 = 5 only calculates the controller limits.

When existing the quick commissioning using p3900 > 0, p0340 is automatically set to 1.

At the end of the calculations, p0340 is automatically set to 0.

If the STARTER commissioning software (start-up tool) writes a 3 into p0340 when "downloading into the target device", then this corresponds to a "complete calculation of the motor/control parameters without equivalent circuit diagram data". The same calculations are carried-out as for p0340 = 1, however, without the equivalent circuit diagram parameters of the motor (refer to p0340 = 2), the motor moment of inertia (p0341) and the motor weight (p0344).

For third-party linear synchronous motors (p300 = 4) equivalent circuit diagram data are not calculated (refer to p340 = 2).

p0341[0...n] Motor moment of inertia / Mot M_mom of inert

SERVO, VECTOR

Can be changed: C2(3), U, T		**Access level:** 3
Data type: Floating Point	**Data set:** MDS	**Function diagram:** 5210
P-Group: Motor	**Units group:** INERTIA	**Unit selection:** -
Min	**Max**	**Factory setting**
0.00000 [kgm^2]	100000.00000 [kgm^2]	0.00000 [kgm^2]

Description: Sets the motor moment of inertia/mass (without load).

Dependency: This means that together with p0342, the rated starting time of the motor is calculated.

Refer to: p0342, r0345

Note: The parameter is automatically preset for motors from the motor list (p0301).

SERVO:

p0341 * p0342 + p1498 influence the speed/torque pre-control in sensorless operation.

VECTOR:

The product p0341 * p0342 is taken into account when automatically calculating the speed controller (p0340 = 4).

© Siemens AG, 2005. All rights reserved

p0341[0...n] Motor weight / Mot M_mom of inert

SERVO (Lin)	**Can be changed:** C2(3), U, T		**Access level:** 3
	Data type: Floating Point	**Data set:** MDS	**Function diagram:** 5210
	P-Group: Motor	**Units group:** MASS	**Unit selection:** -
	Min	**Max**	**Factory setting**
	0.00000 [kg]	10000.00000 [kg]	0.00000 [kg]

Description: Sets the motor moment of inertia/mass (without load).

Dependency: This means that together with p0342, the rated starting time of the motor is calculated.
Refer to: p0342, r0345

Note: The parameter is automatically preset for motors from the motor list (p0301).
SERVO:
p0341 * p0342 + p1498 influence the speed/torque pre-control in sensorless operation.
VECTOR:
The product p0341 * p0342 is taken into account when automatically calculating the speed controller (p0340 = 4).

p0342[0...n] Ratio between the total and motor moment of inertia / Mot MomInert Ratio

SERVO, VECTOR	**Can be changed:** C2(3), U, T		**Access level:** 3
	Data type: Floating Point	**Data set:** MDS	**Function diagram:** 5210
	P-Group: Motor	**Units group:** -	**Unit selection:** -
	Min	**Max**	**Factory setting**
	1.000	10000.000	1.000

Description: Sets the ratio between the total moment of inertia/mass (load + motor) and the intrinsic motor moment of inertia/mass (no load).

Dependency: This means that together with p0341, the rated starting (accelerating time) of the motor is calculated for a VECTOR drive.
Refer to: p0341, r0345, p1498

Note: SERVO:
p0341 * p0342 + p1498 influence the speed/torque pre-control in sensorless operation.
VECTOR:
The product p0341 * p0342 is taken into account when automatically calculating the speed controller (p0340 = 4).

p0344[0...n] Motor weight / Motor weight

SERVO, VECTOR	**Can be changed:** C2(3), T		**Access level:** 3
	Data type: Floating Point	**Data set:** MDS	**Function diagram:** -
	P-Group: Motor	**Units group:** MASS	**Unit selection:** -
	Min	**Max**	**Factory setting**
	0.0 [kg]	50000.0 [kg]	0.0 [kg]

Description: Sets the motor weight.
The following applies for VECTOR drives (refer to p0107):
The parameter influences the thermal 3 mass model of the induction motor.

Note: The parameter is not used for synchronous motors (p0300 = 2xx).
The parameter is automatically preset for motors from the motor list (p0301).

© Siemens AG, 2005. All rights reserved

r0345[0...n] Nominal motor starting time / Mot t_start_rated

VECTOR	**Can be changed:** -		**Access level:** 3
	Data type: Floating Point	**Data set:** MDS	**Function diagram:** -
	P-Group: Motor	**Units group:** TIME	**Unit selection:** -
	Min	**Max**	**Factory setting**
	- [s]	- [s]	- [s]

Description: Displays the rated motor starting time. This time corresponds to the time from standstill up to reaching the motor rated speed/velocity and the acceleration with motor rated torque/force (r0333).

Dependency: Refer to: r0313, r0333, r0336, p0341, p0342

p0346[0...n] Motor excitation build-up time / Mot t_excitation

VECTOR	**Can be changed:** C2(3), U, T		**Access level:** 3
	Data type: Floating Point	**Data set:** MDS	**Function diagram:** -
	P-Group: Motor	**Units group:** TIME	**Unit selection:** -
	Min	**Max**	**Factory setting**
	0.000 [s]	20.000 [s]	0.000 [s]

Description: Sets the excitation build-up time of the motor.

This involves the delay time between enabling the pulses and enabling the ramp-function generator. The induction motor is magnetized during this time.

Note: The parameter is calculated using p0340 = 1, 3.

For induction motors, the result depends on the rotor time constant (r0384).

If this time is excessively reduced, this can result in an inadequate magnetization of the induction motor. This means that the parameter cannot be set less than 25% of the rotor time constant.

p0347[0...n] Motor de-excitation time / Mot t_de-excitat.

VECTOR	**Can be changed:** C2(3), U, T		**Access level:** 3
	Data type: Floating Point	**Data set:** MDS	**Function diagram:** -
	P-Group: Motor	**Units group:** TIME	**Unit selection:** -
	Min	**Max**	**Factory setting**
	0.000 [s]	20.000 [s]	0.000 [s]

Description: Sets the de-magnetizing time (for induction motors) after the inverter pulses have been cancelled.

The inverter pulses cannot be switched-in (enabled) within this delay time.

Note: The parameter is calculated using p0340 = 1, 3.

For induction motors, the result depends on the rotor time constant (r0384).

if this time is shortened too much, then this can result in an inadequate de-magnetization of the induction motor and in an overcurrent condition when the pulses are subsequently enabled (only when the flying restart function is activated and the motor is rotating).

After a normal stopping process, the delay time is not active - i.e. after OFF1, OFF3 or JOG

p0348[0...n] Speed at the start of field weakening Vdc = 600 V / Mot n_field weaken

SERVO	**Can be changed:** C2(3), U, T		**Access level:** 3
	Data type: Floating Point	**Data set:** MDS	**Function diagram:** 5722
	P-Group: Motor	**Units group:** SPEED_ROT	**Unit selection:** -
	Min	**Max**	**Factory setting**
	0.0 [1/min]	210000.0 [1/min]	0.0 [1/min]

Description: Sets the speed/velocity at the start of field weakening for a DC link voltage of 600 V.

Dependency: Refer to: p0320, r0331

Note: The parameter is automatically preset for motors from the motor list (p0301).

© Siemens AG, 2005. All rights reserved

p0348[0...n] Velocity at the start of field weakening Vdc = 600 V / Mot n_field weaken

SERVO (Lin)	**Can be changed:** C2(3), U, T		**Access level:** 3
	Data type: Floating Point	**Data set:** MDS	**Function diagram:** 5722
	P-Group: Motor	**Units group:** SPEED_LIN_METRIC_P3	**Unit selection:** -
	Min	**Max**	**Factory setting**
	0.0 [m/min]	1000.0 [m/min]	0.0 [m/min]

Description: Sets the speed/velocity at the start of field weakening for a DC link voltage of 600 V.
Dependency: Refer to: p0320, r0331
Note: The parameter is automatically preset for motors from the motor list (p0301).

p0350[0...n] Motor stator resistance, cold / Mot R_stator cold

SERVO, VECTOR	**Can be changed:** C2(3), U, T		**Access level:** 2
	Data type: Floating Point	**Data set:** MDS	**Function diagram:** -
	P-Group: Motor	**Units group:** RESISTANCE	**Unit selection:** -
	Min	**Max**	**Factory setting**
	0.00000 [Ohm]	2000.00000 [Ohm]	0.00000 [Ohm]

Description: Sets the stator resistance of the motor at ambient temperature p0625.
Dependency: Refer to: p0625
Note: The parameter is automatically preset for motors from the motor list (p0301).
The motor identification routine determines the stator resistance from the total stator resistance minus the cable resistance (p0352).

p0352[0...n] Cable resistance / Mot R_cable cold

SERVO, VECTOR	**Can be changed:** C2(3), U, T		**Access level:** 3
	Data type: Floating Point	**Data set:** MDS	**Function diagram:** -
	P-Group: Motor	**Units group:** RESISTANCE	**Unit selection:** -
	Min	**Max**	**Factory setting**
	0.00000 [Ohm]	120.00000 [Ohm]	0.00000 [Ohm]

Description: Resistance of the power cable between the Motor Module and motor.
Note: The parameter influences the temperature adaptation of the stator resistance.
The motor identification routine does not change the cable resistance. This is subtracted from the total measured stator resistance in order to calculate the stator resistance (p0350, p0352).

p0353[0...n] Motor series inductance / Mot L_series

SERVO	**Can be changed:** C2(3), U, T		**Access level:** 2
	Data type: Floating Point	**Data set:** MDS	**Function diagram:** -
	P-Group: Motor	**Units group:** INDUCTANCE_M3	**Unit selection:** -
	Min	**Max**	**Factory setting**
	0.000 [mH]	1000000.000 [mH]	0.000 [mH]

Description: Sets the series inductance.
Note: For the automatic calculation with p0340 = 1 or 3, the calculation of p0348 is influenced by p0353 if p0348 was 0.
For the automatic calculation with p0340 = 1, 3 or 4, the calculation of p1715 is influenced by p0353.

© Siemens AG, 2005. All rights reserved

p0354[0...n] Motor rotor resistance, cold / Mot R_rotor cold

SERVO, VECTOR	**Can be changed:** C2(3), U, T		**Access level:** 3
	Data type: Floating Point	**Data set:** MDS	**Function diagram:** -
	P-Group: Motor	**Units group:** RESISTANCE	**Unit selection:** -
	Min	**Max**	**Factory setting**
	0.00000 [Ohm]	300.00000 [Ohm]	0.00000 [Ohm]

Description: Sets the rotor/secondary section resistance of the motor at the ambient temperature p0625.
This parameter value is automatically calculated using the motor model (p0340 = 1, 2) or using the motor identification routine (p1910).

Dependency: Refer to: p0625

Note: The parameter is not used for synchronous motors (p0300 = 2xx).
The parameter is automatically preset for motors from the motor list (p0301).

p0356[0...n] Motor stator leakage inductance / Mot L_stator leak.

SERVO, VECTOR	**Can be changed:** C2(3), U, T		**Access level:** 3
	Data type: Floating Point	**Data set:** MDS	**Function diagram:** -
	P-Group: Motor	**Units group:** INDUCTANCE_M3	**Unit selection:** -
	Min	**Max**	**Factory setting**
	0.00000 [mH]	1000.00000 [mH]	0.00000 [mH]

Description: Induction motor: Sets the rotor leakage inductance of the motor.
Synchronous motor: Sets the stator quadrature axis inductance of the motor.
This parameter value is automatically calculated using the motor model (p0340 = 1, 2) or using the motor identification routine (p1910).

Note: The parameter is automatically preset for motors from the motor list (p0301).

p0357[0...n] Motor stator inductance, d axis / Mot L_stator_d

VECTOR	**Can be changed:** C2(3), U, T		**Access level:** 3
	Data type: Floating Point	**Data set:** MDS	**Function diagram:** -
	P-Group: Motor	**Units group:** INDUCTANCE_M3	**Unit selection:** -
	Min	**Max**	**Factory setting**
	0.00000 [mH]	1000.00000 [mH]	0.00000 [mH]

Description: Sets the stator direct axis inductance of the motor for synchronous motors.
This parameter value is automatically calculated using the motor model (p0340 = 1, 2) or using the motor identification routine (p1910).

p0358[0...n] Motor rotor leakage inductance / Mot L_rotor leak.

SERVO, VECTOR	**Can be changed:** C2(3), U, T		**Access level:** 3
	Data type: Floating Point	**Data set:** MDS	**Function diagram:** -
	P-Group: Motor	**Units group:** INDUCTANCE_M3	**Unit selection:** -
	Min	**Max**	**Factory setting**
	0.00000 [mH]	1000.00000 [mH]	0.00000 [mH]

Description: Sets the rotor/secondary section leakage inductance of the motor.
The value is automatically calculated using the motor model (p0340 = 1, 2) or determined using the motor identification routine (p1910).

Note: The parameter is not used for synchronous motors (p0300 = 2xx).
The parameter is automatically preset for motors from the motor list (p0301).

© Siemens AG, 2005. All rights reserved

p0360[0...n] Motor magnetizing inductance / Mot L_main

SERVO, VECTOR	**Can be changed:** C2(3), U, T		**Access level:** 3
	Data type: Floating Point	**Data set:** MDS	**Function diagram:** -
	P-Group: Motor	**Units group:** INDUCTANCE_M3	**Unit selection:** -
	Min	**Max**	**Factory setting**
	0.00000 [mH]	10000.00000 [mH]	0.00000 [mH]

Description: Sets the magnetizing inductance of the motor.
This parameter value is automatically calculated using the motor model (p0340 = 1, 2) or using the motor identification routine (p1910).

Note: The parameter is not used for synchronous motors (p0300 = 2xx).
The parameter is automatically preset for motors from the motor list (p0301).

p0362[0...n] Saturation characteristic flux 1 / Mot saturat.flux 1

VECTOR	**Can be changed:** C2(3), U, T		**Access level:** 4
	Data type: Floating Point	**Data set:** MDS	**Function diagram:** -
	P-Group: Motor	**Units group:** PERCENT	**Unit selection:** -
	Min	**Max**	**Factory setting**
	25.0 [%]	300.0 [%]	60.0 [%]

Description: The saturation characteristics (flux as a function of the magnetizing current) is defined using 4 points.
This parameter specifies the y coordinate (flux) for the 1st value pair of the characteristic.
Sets the first flux value of the saturation characteristic as a [%] referred to the rated motor voltage (p0304).

Dependency: The following applies for the flux values:
p0362 < p0363 < p0364 < p0365
Refer to: p0366

Note: p0362 = 100 % corresponds to the rated motor flux.

p0363[0...n] Saturation characteristic flux 2 / Mot saturat.flux 2

VECTOR	**Can be changed:** C2(3), U, T		**Access level:** 4
	Data type: Floating Point	**Data set:** MDS	**Function diagram:** -
	P-Group: Motor	**Units group:** PERCENT	**Unit selection:** -
	Min	**Max**	**Factory setting**
	25.0 [%]	300.0 [%]	85.0 [%]

Description: The saturation characteristics (flux as a function of the magnetizing current) is defined using 4 points.
This parameter specifies the y coordinate (flux) for the 2nd value pair of the characteristic.
Sets the second flux value of the saturation characteristic as a [%] referred to the rated motor voltage (p0304).

Dependency: The following applies for the flux values:
p0362 < p0363 < p0364 < p0365
Refer to: p0367

Note: p0363 = 100 % corresponds to the rated motor flux.

p0364[0...n] Saturation characteristic flux 3 / Mot saturat.flux 3

VECTOR	**Can be changed:** C2(3), U, T		**Access level:** 4
	Data type: Floating Point	**Data set:** MDS	**Function diagram:** -
	P-Group: Motor	**Units group:** PERCENT	**Unit selection:** -
	Min	**Max**	**Factory setting**
	25.0 [%]	300.0 [%]	115.0 [%]

Description: The saturation characteristics (flux as a function of the magnetizing current) is defined using 4 points.
This parameter specifies the y coordinate (flux) for the 3rd value pair of the characteristic.
Sets the third flux value of the saturation characteristic as a [%] referred to the rated motor voltage (p0304).

© Siemens AG, 2005. All rights reserved

Dependency: The following applies for the flux values:
p0362 < p0363 < p0364 < p0365
Refer to: p0368

Note: p0364 = 100 % corresponds to the rated motor flux.

p0365[0...n] Saturation characteristic flux 4 / Mot saturat.flux 4

VECTOR	**Can be changed:** C2(3), U, T		**Access level:** 4
	Data type: Floating Point	**Data set:** MDS	**Function diagram:** -
	P-Group: Motor	**Units group:** PERCENT	**Unit selection:** -
	Min	**Max**	**Factory setting**
	25.0 [%]	300.0 [%]	125.0 [%]

Description: The saturation characteristics (flux as a function of the magnetizing current) is defined using 4 points.
This parameter specifies the y coordinate (flux) for the 4th value pair of the characteristic.
Sets the fourth flux value of the saturation characteristic as a [%] referred to the rated motor voltage (p0304).

Dependency: The following applies for the flux values:
p0362 < p0363 < p0364 < p0365
Refer to: p0369

Note: p0365 = 100 % corresponds to the rated motor flux.

p0366[0...n] Saturation characteristic I_mag 1 / Mot sat. I_mag 1

VECTOR	**Can be changed:** C2(3), U, T		**Access level:** 4
	Data type: Floating Point	**Data set:** MDS	**Function diagram:** -
	P-Group: Motor	**Units group:** PERCENT	**Unit selection:** -
	Min	**Max**	**Factory setting**
	25.0 [%]	500.0 [%]	50.0 [%]

Description: The saturation characteristics (flux as a function of the magnetizing current) is defined using 4 points.
This parameter specifies the x coordinate (magnetizing current) for the 1st value pair of the characteristic.
Sets the first magnetizing current of the saturation characteristic as a [%] referred to the rated magnetizing current (r0331).

Dependency: The following applies for the magnetizing currents:
p0366 < p0367 < p0368 < p0369
Refer to: p0362

p0367[0...n] Saturation characteristic I_mag 2 / Mot sat. I_mag 2

VECTOR	**Can be changed:** C2(3), U, T		**Access level:** 4
	Data type: Floating Point	**Data set:** MDS	**Function diagram:** -
	P-Group: Motor	**Units group:** PERCENT	**Unit selection:** -
	Min	**Max**	**Factory setting**
	25.0 [%]	500.0 [%]	75.0 [%]

Description: The saturation characteristics (flux as a function of the magnetizing current) is defined using 4 points.
This parameter specifies the x coordinate (magnetizing current) for the 2nd value pair of the characteristic.
Sets the second magnetizing current of the saturation characteristic as a [%] referred to the rated magnetizing current (r0331).

Dependency: The following applies for the magnetizing currents:
p0366 < p0367 < p0368 < p0369
Refer to: p0363

© Siemens AG, 2005. All rights reserved

p0368[0...n] Saturation characteristic I_mag 3 / Mot sat. I_mag 3

VECTOR	**Can be changed:** C2(3), U, T		**Access level:** 4
	Data type: Floating Point	**Data set:** MDS	**Function diagram:** -
	P-Group: Motor	**Units group:** PERCENT	**Unit selection:** -
	Min	**Max**	**Factory setting**
	25.0 [%]	500.0 [%]	150.0 [%]

Description: The saturation characteristics (flux as a function of the magnetizing current) is defined using 4 points.
This parameter specifies the x coordinate (magnetizing current) for the 3rd value pair of the characteristic.
Sets the third magnetizing current of the saturation characteristic as a [%] referred to the rated magnetizing current (r0331).

Dependency: The following applies for the magnetizing currents:
p0366 < p0367 < p0368 < p0369
Refer to: p0364

p0369[0...n] Saturation characteristic I_mag 4 / Mot sat. I_mag 4

VECTOR	**Can be changed:** C2(3), U, T		**Access level:** 4
	Data type: Floating Point	**Data set:** MDS	**Function diagram:** -
	P-Group: Motor	**Units group:** PERCENT	**Unit selection:** -
	Min	**Max**	**Factory setting**
	25.0 [%]	500.0 [%]	210.0 [%]

Description: The saturation characteristics (flux as a function of the magnetizing current) is defined using 4 points.
This parameter specifies the x coordinate (magnetizing current) for the 4th value pair of the characteristic.
Sets the fourth magnetizing current of the saturation characteristic as a [%] referred to the rated magnetizing current (r0331).

Dependency: The following applies for the magnetizing currents:
p0366 < p0367 < p0368 < p0369
Refer to: p0365

r0370[0...n] Motor stator resistance, cold / Mot R_stator cold

SERVO, VECTOR	**Can be changed:** -		**Access level:** 4
	Data type: Floating Point	**Data set:** MDS	**Function diagram:** -
	P-Group: Motor	**Units group:** RESISTANCE	**Unit selection:** -
	Min	**Max**	**Factory setting**
	- [Ohm]	- [Ohm]	- [Ohm]

Description: Displays the motor stator resistance at an ambient temperature p0625. The value does not include the cable resistance.

Dependency: Refer to: p0625

r0372[0...n] Cable resistance / Mot R_cable

VECTOR	**Can be changed:** -		**Access level:** 4
	Data type: Floating Point	**Data set:** MDS	**Function diagram:** -
	P-Group: Motor	**Units group:** RESISTANCE	**Unit selection:** -
	Min	**Max**	**Factory setting**
	- [Ohm]	- [Ohm]	- [Ohm]

Description: Displays the cable resistance between the Motor Module and motor.

Dependency: Refer to: p0352

© Siemens AG, 2005. All rights reserved

r0373[0...n] Motor rated stator resistance / Mot R_stator rated

SERVO, VECTOR	**Can be changed:** -		**Access level:** 4
	Data type: Floating Point	**Data set:** MDS	**Function diagram:** -
	P-Group: Motor	**Units group:** RESISTANCE	**Unit selection:** -
	Min	**Max**	**Factory setting**
	- [Ohm]	- [Ohm]	- [Ohm]

Description: Displays the rated motor stator resistance at rated temperature (sum from p0625 and p0627).
Dependency: Refer to: p0627
Note: The parameter is not used for synchronous motors (p0300 = 2xx).

r0374[0...n] Motor rotor resistance, cold / Mot R_rotor cold

SERVO, VECTOR	**Can be changed:** -		**Access level:** 4
	Data type: Floating Point	**Data set:** MDS	**Function diagram:** -
	P-Group: Motor	**Units group:** RESISTANCE	**Unit selection:** -
	Min	**Max**	**Factory setting**
	- [Ohm]	- [Ohm]	- [Ohm]

Description: Displays the rotor/secondary section resistance of the motor for the ambient temperature p0625.
Dependency: Refer to: p0625
Note: The parameter is not used for synchronous motors (p0300 = 2xx).

r0376[0...n] Rated motor rotor resistance / Mot R_rotor rated

SERVO, VECTOR	**Can be changed:** -		**Access level:** 4
	Data type: Floating Point	**Data set:** MDS	**Function diagram:** -
	P-Group: Motor	**Units group:** RESISTANCE	**Unit selection:** -
	Min	**Max**	**Factory setting**
	- [Ohm]	- [Ohm]	- [Ohm]

Description: Displays the rated (nominal) rotor/secondary section resistance of the motor at the rated temperature (sum of p0625 and p0628).
Dependency: Refer to: p0628
Note: The parameter is not used for synchronous motors (p0300 = 2xx).

r0377[0...n] Motor leakage inductance, total / Mot L_leak total

SERVO, VECTOR	**Can be changed:** -		**Access level:** 4
	Data type: Floating Point	**Data set:** MDS	**Function diagram:** 6640
	P-Group: Motor	**Units group:** INDUCTANCE_M3	**Unit selection:** -
	Min	**Max**	**Factory setting**
	- [mH]	- [mH]	- [mH]

Description: Induction motor:
Displays the stator leakage inductance of the motor including the series inductance (p0353) for servo drives or the motor reactor (p0233) for VECTOR drives.
Synchronous motor:
Displays the stator quadrature axis inductance including the series inductance (p0353) for servo drives or the motor reactor (p0233) for VECTOR drives.

© Siemens AG, 2005. All rights reserved

r0378[0...n] Motor stator inductance, d axis / Mot L_stator_d

VECTOR	**Can be changed:** -		**Access level:** 4
	Data type: Floating Point	**Data set:** MDS	**Function diagram:** -
	P-Group: Motor	**Units group:** INDUCTANCE_M3	**Unit selection:** -
	Min	**Max**	**Factory setting**
	- [mH]	- [mH]	- [mH]

Description: Displays the stator direct-axis inductance of the synchronous motor.

r0382[0...n] Motor main inductance, transformed / Mot L_main trans

SERVO, VECTOR	**Can be changed:** -		**Access level:** 4
	Data type: Floating Point	**Data set:** MDS	**Function diagram:** -
	P-Group: Motor	**Units group:** INDUCTANCE_M3	**Unit selection:** -
	Min	**Max**	**Factory setting**
	- [mH]	- [mH]	- [mH]

Description: Displays the magnetizing inductance of the motor.

Note: The parameter is not used for synchronous motors (p0300 = 2xx).

r0384[0...n] Motor rotor time constant / Mot T_rotor

SERVO, VECTOR	**Can be changed:** -		**Access level:** 4
	Data type: Floating Point	**Data set:** MDS	**Function diagram:** 6722
	P-Group: Motor	**Units group:** TIME_M3	**Unit selection:** -
	Min	**Max**	**Factory setting**
	- [ms]	- [ms]	- [ms]

Description: Displays the rotor time constant.

Note: The parameter is not used for synchronous motors.

The value is calculated from the sum of the inductances on the rotor side (p0358, p0360) divided by the rotor resistance (p0354). The temperature adaptation of the rotor resistance is not taken into account.

r0386[0...n] Motor stator leakage time constant / Mot T_stator leak

SERVO, VECTOR	**Can be changed:** -		**Access level:** 4
	Data type: Floating Point	**Data set:** MDS	**Function diagram:** -
	P-Group: Motor	**Units group:** TIME_M3	**Unit selection:** -
	Min	**Max**	**Factory setting**
	- [ms]	- [ms]	- [ms]

Description: Displays the stator leakage time constant.

Note: The value is calculated from the sum of all leakage inductances (p0233*, p0353**, p0356, p0358) divided by the sum of all motor resistances (p0350, p0352*, p0354).

The temperature adaptation of the resistances is not taken into account.

* only applies for VECTOR (r0107).

** only applies for SERVO (r0107).

© Siemens AG, 2005. All rights reserved

p0391[0...n] Current controller adaptation, lower starting point / I_adapt pt. lower

SERVO	**Can be changed:** C2(3), U, T		**Access level:** 3
	Data type: Floating Point	**Data set:** MDS	**Function diagram:** 5714
	P-Group: Motor	**Units group:** CURRENT_AC_EFF	**Unit selection:** -
	Min	**Max**	**Factory setting**
	0.00 [Aeff]	6000.00 [Aeff]	0.00 [Aeff]

Description: Sets the lower starting point of the current-dependent current controller adaptation.
Dependency: Refer to: p0392, p0393, p1715
Note: For p0393 = 100 %, the current controller adaptation is disabled and p1715 is effective over the entire range.
The parameter is automatically preset for motors from the motor list (p0301).

p0392[0...n] Current controller adaptation, upper starting point / I_adapt pt. upper

SERVO	**Can be changed:** C2(3), U, T		**Access level:** 3
	Data type: Floating Point	**Data set:** MDS	**Function diagram:** 5714
	P-Group: Motor	**Units group:** CURRENT_AC_EFF	**Unit selection:** -
	Min	**Max**	**Factory setting**
	0.00 [Aeff]	6000.00 [Aeff]	0.00 [Aeff]

Description: Sets the upper starting point of the current-dependent current controller adaptation.
Dependency: Refer to: p0391, p0393, p1715
Note: For p0393 = 100 %, the current controller adaptation is disabled and p1715 is effective over the entire range.
The parameter is automatically preset for motors from the motor list (p0301).

p0393[0...n] Current controller adaptation, P gain, scaling upper / I_adapt Kp upper

SERVO	**Can be changed:** C2(3), U, T		**Access level:** 3
	Data type: Floating Point	**Data set:** MDS	**Function diagram:** 5714
	P-Group: Motor	**Units group:** PERCENT	**Unit selection:** -
	Min	**Max**	**Factory setting**
	0.00 [%]	1000.00 [%]	100.00 [%]

Description: Sets the factor for the current controller P gain after the adaptation range (currents greater than p0392). The value is referred to p1715.
Dependency: Refer to: p0391, p0392, p1715
Note: For p0393 = 100 %, the current controller adaptation is disabled and p1715 is effective over the entire range.
The parameter is automatically preset for motors from the motor list (p0301).

r0395[0...n] Stator resistance, actual / R_stator active

SERVO, VECTOR	**Can be changed:** -		**Access level:** 3
	Data type: Floating Point	**Data set:** MDS	**Function diagram:** 6300, 6730, 6731
	P-Group: Motor	**Units group:** RESISTANCE	**Unit selection:** -
	Min	**Max**	**Factory setting**
	- [Ohm]	- [Ohm]	- [Ohm]

Description: Displays the actual stator resistance (phase value).
The parameter is influenced by the temperature model and includes the temperature-independent cable resistance.

© Siemens AG, 2005. All rights reserved

r0396[0...n] Rotor resistance, actual / R_rotor active

SERVO, VECTOR	**Can be changed:** -		**Access level:** 3
	Data type: Floating Point	**Data set:** MDS	**Function diagram:** 6730
	P-Group: Motor	**Units group:** RESISTANCE	**Unit selection:** -
	Min	**Max**	**Factory setting**
	- [Ohm]	- [Ohm]	- [Ohm]

Description: Displays the actual rotor/secondary section resistance (phase value).
The parameter is influenced by the temperature model.

Note: This parameter is not used for synchronous motors (p0300 = 2xx).

p0400[0...n] Enc type selection / Enc type selection

SERVO, VECTOR	**Can be changed:** C2(1, 4)		**Access level:** 2
	Data type: Integer16	**Data set:** EDS	**Function diagram:** 1580, 4704, 6004
	P-Group: Encoder	**Units group:** -	**Unit selection:** -
	Min	**Max**	**Factory setting**
	0	10000	0

Description: Selects the encoder from the list of encoder types supported.

Values:
0: No encoder
1001: Resolver 1 speed
1002: Resolver 2 speed
1003: Resolver 3 speed
1004: Resolver 4 speed
2001: 2048, 1 Vpp, A/B C/D R
2002: 2048, 1 Vpp, A/B R
2003: 256, 1 Vpp, A/B R
2004: 400, 1 Vpp, A/B R
2005: 512, 1 Vpp, A/B R
2010: 18000, 1 Vpp, A/B R distance-coded
2050: Encoder with EnDat interface
2051: 2048, 1 Vpp, A/B, EnDat, Multiturn 4096
2052: 32, 1 Vpp, A/B, EnDat, Multiturn 4096
2053: 512, 1 Vpp, A/B, EnDat, Multiturn 4096
2110: 4000 nm, 1 Vpp, A/B R distance-coded
2111: 20000 nm, 1 Vpp, A/B R distance-coded
2112: 40000 nm, 1 Vpp, A/B R distance-coded
2151: 16000 nm, 1 Vpp, A/B, EnDat, resolution 100 nm
3001: 1024 HTL A/B R at X521/X531
3002: 1024 TTL A/B R at X521/X531
3003: 2048 HTL A/B R at X521/X531
3005: 1024 HTL A/B at X521/X531
3006: 1024 TTL A/B at X521/X531
3007: 2048 HTL A/B at X521/X531
3008: 2048 TTL A/B at X521/X531
3009: 1024 HTL A/B unipolar at X521/X531
3011: 2048 HTL A/B unipolar at X521/X531
3020: 2048 TTL A/B R at X520
9999: User-defined
10000: Identify encoder

Note: The connected encoder can be identified by p0400 = 10000. The requires that the encoder supports this function and is possible in the following cases: Motor with DRIVE-CLiQ, encoder with EnDat interface.
If an identification is not possible, then p0400 is set to 0.
The encoder data (e.g. pulse number p0408) can only be changed when p0400 = 9999.

© Siemens AG, 2005. All rights reserved

p0404[0...n] Encoder configuration effective / Enc_config eff

SERVO, VECTOR	**Can be changed:** C2(4)		**Access level:** 3
	Data type: Unsigned32	**Data set:** EDS	**Function diagram:** 4704
	P-Group: Encoder	**Units group:** -	**Unit selection:** -
	Min	**Max**	**Factory setting**
	0000 bin	0000 0000 1111 1111 1111 1111 1111 1111 bin	0000 bin

Description: Settings for the basic encoder properties.

Bit field:

Bit	Signal name	0 signal	1 signal	FP
00	Linear encoder	No	Yes	-
01	Abs value encoder	No	Yes	-
02	Multiturn encoder	No	Yes	-
03	Track A/B sq-wave	No	Yes	-
04	Track A/B sinus	No	Yes	-
05	Track C/D	No	Yes	-
06	Hall sensor	No	Yes	-
08	EnDat encoder	No	Yes	-
09	SSI encoder	No	Yes	-
12	Equidistant zero mark	No	Yes	-
13	Irregular zero mark	No	Yes	-
14	Distance-coded zero mark	No	Yes	-
15	Commutation with zero mark	No	Yes	-
16	Acceleration	No	Yes	-
20	Voltage level 5 V	No	Yes	-
21	Voltage level 24 V	No	Yes	-
22	Remote sense (only SMC30)	No	Yes	-
23	Resolver excit.	No	Yes	-

Note:

ZM: Zero mark

SMC: Sensor Module Cabinet

If a technique to determine the commutation information/data has not been selected (e.g. track C/D, Hall sensor), and the encoder pulse number is an integer multiple of the pole number, then the following applies:

The track A/B is adjusted to match the magnetic position of the motor.

Re bit 1, 2 (absolute value encoder, multi-turn encoder):

These bits can only be selected for EnDat or SSI encoders.

Re bit 12 (equidistant zero mark):

The zero marks occur at regular intervals (e.g. rotary encoder with 1 zero mark per revolution). The bit activates the monitoring of the zero mark clearance (p0425).

Re bit 13 (irregular zero mark):

The zero marks occur at irregular intervals (e.g. a linear scale with only 1 zero mark in the traversing range). The zero mark clearance is not monitored.

Re bit 14 (clearance-coded zero mark):

The distance (clearance) between two or several consecutive zero marks allows the absolute position to be calculated.

Re bit 15 (commutation with zero mark):

For clearance-coded zero marks, the following applies:

The phase sequence of the Hall signal (if available) must be the same as the phase sequence of the encoder.

The fine synchronization is only started after 2 zero marks have been passed.

© Siemens AG, 2005. All rights reserved

p0405[0...n] Square-wave encoder track A/B / Sq-wave enc A/B

SERVO, VECTOR	**Can be changed:** C2(4)		**Access level:** 3
	Data type: Unsigned32	**Data set:** EDS	**Function diagram:** 4704, 6004
	P-Group: Encoder	**Units group:** -	**Unit selection:** -
	Min	**Max**	**Factory setting**
	0000 bin	1111 bin	0000 bin

Description: Settings for the track A/B of a square-wave encoder. For square-wave encoders, p0404.3 must also be 1.

Bit field:

Bit	Signal name	0 signal	1 signal	FP
00	Signal	Unipolar	Bipolar	-
01	Level	HTL	TTL	-
02	Track monitoring	None	A/B <> -A/B	-
03	Zero pulse	24 V unipolar	Same as A/B track	-

p0407[0...n] Linear encoder grid division / Enc grid div

SERVO, VECTOR	**Can be changed:** C2(4)		**Access level:** 3
	Data type: Unsigned32	**Data set:** EDS	**Function diagram:** 4704, 6004
	P-Group: Encoder	**Units group:** LENGTH_M9	**Unit selection:** -
	Min	**Max**	**Factory setting**
	0 [nm]	250000000 [nm]	16000 [nm]

Description: Sets the grid division for a linear encoder.

Note: The lowest permissible value is 250 nm.

p0408[0...n] Rotary encoder pulse No. / Rot enc pulse No.

SERVO, VECTOR	**Can be changed:** C2(4)		**Access level:** 3
	Data type: Unsigned32	**Data set:** EDS	**Function diagram:** 4704, 6004
	P-Group: Encoder	**Units group:** -	**Unit selection:** -
	Min	**Max**	**Factory setting**
	0	16777215	2048

Description: Sets the number of pulses for a rotary encoder.

Note: The number of pole pairs for a resolver is entered here.
The smallest permissible value is 1 pulse.

p0408 Rotary encoder pulse No. / Rot enc pulse No.

TM41	**Can be changed:** C2(4)		**Access level:** 3
	Data type: Unsigned32	**Data set:** -	**Function diagram:** 9674
	P-Group: Encoder	**Units group:** -	**Unit selection:** -
	Min	**Max**	**Factory setting**
	1000	8192	2048

Description: Sets the number of pulses for a rotary encoder.

© Siemens AG, 2005. All rights reserved

p0410[0...n] Encoder inversion actual value / Enc inv act value

SERVO, VECTOR

Can be changed: C2(4) **Access level:** 3
Data type: Unsigned16 **Data set:** EDS **Function diagram:** -
P-Group: Encoder **Units group:** - **Unit selection:** -

Min	Max	Factory setting
0000 bin	0011 bin	0000 bin

Description: Setting to invert actual values.

Bit field:

Bit	Signal name	0 signal	1 signal	FP
00	Invert speed actual value	No	Yes	4710, 6010
01	Invert position actual value	No	Yes	4704

Note: The inversion influences the following parameters:
Bit 00: r0061, r0063 (exception: sensorless closed-loop control), r0094
Bit 01: r0482, r0483

p0418[0...n] Fine resolution Gx_XIST1 (in bits) / Enc fine Gx_XIST1

SERVO, VECTOR

Can be changed: C2(4) **Access level:** 3
Data type: Unsigned8 **Data set:** EDS **Function diagram:** 4704
P-Group: Encoder **Units group:** - **Unit selection:** -

Min	Max	Factory setting
2	18	11

Description: Sets the fine resolution in bits of the incremental position actual values.
Note: The parameter applies for the following process data:
- Gx_XIST1
- Gx_XIST2 for reference mark or flying measurement

p0418 Fine resolution Gx_XIST1 (in bits) / Enc fine Gx_XIST1

TM41

Can be changed: C2(4) **Access level:** 3
Data type: Unsigned8 **Data set:** - **Function diagram:** 9674
P-Group: Encoder **Units group:** - **Unit selection:** -

Min	Max	Factory setting
2	18	11

Description: Sets the fine resolution in bits of the incremental position actual values.

p0419[0...n] Fine resolution absolute value Gx_XIST2 (in bits) / Enc fine Gx_XIST2

SERVO, VECTOR

Can be changed: C2(4) **Access level:** 3
Data type: Unsigned8 **Data set:** EDS **Function diagram:** 4704
P-Group: Encoder **Units group:** - **Unit selection:** -

Min	Max	Factory setting
2	18	9

Description: Sets the fine resolution in bits of the absolute position actual values.
Note: This parameter applies to process data Gx_XIST2 when reading the absolute value.

© Siemens AG, 2005. All rights reserved

p0421[0...n] Absolute encoder rotary multi-turn resolution / Enc abs multiturn

SERVO, VECTOR	**Can be changed:** C2(4)		**Access level:** 3
	Data type: Unsigned16	**Data set:** EDS	**Function diagram:** 4704, 6004
	P-Group: Encoder	**Units group:** -	**Unit selection:** -
	Min	**Max**	**Factory setting**
	0	65535	4096

Description: Sets the number of rotations that can be resolved for a rotary absolute encoder.

p0422[0...n] Absolute value encoder linear measuring step resolution / Enc abs meas step

SERVO, VECTOR	**Can be changed:** C2(4)		**Access level:** 3
	Data type: Unsigned32	**Data set:** EDS	**Function diagram:** 4704, 6004
	P-Group: Encoder	**Units group:** LENGTH_M9	**Unit selection:** -
	Min	**Max**	**Factory setting**
	0 [nm]	4294967295 [nm]	8192 [nm]

Description: Sets the resolution of the absolute position for a linear absolute encoder.

Note: The serial protocol of an absolute encoder provides the position with a certain resolution , e.g. 100 nm. This value must be entered here.

p0423[0...n] Absolute value encoder rotary single-turn resolution / Enc abs singleturn

SERVO, VECTOR	**Can be changed:** C2(4)		**Access level:** 3
	Data type: Unsigned32	**Data set:** EDS	**Function diagram:** 4704, 6004
	P-Group: Encoder	**Units group:** -	**Unit selection:** -
	Min	**Max**	**Factory setting**
	0	1073741823	8192

Description: Sets the number of measuring steps per revolution for a rotary absolute value encoder. The resolution refers to the absolute position.

p0424[0...n] Encoder, linear zero mark distance / Enc lin ZM_dist

SERVO, VECTOR	**Can be changed:** C2(4)		**Access level:** 3
	Data type: Unsigned16	**Data set:** EDS	**Function diagram:** -
	P-Group: Encoder	**Units group:** LENGTH_M3	**Unit selection:** -
	Min	**Max**	**Factory setting**
	0 [mm]	65535 [mm]	20 [mm]

Description: Sets the distance between two zero marks for a linear encoder. This information is used for zero mark monitoring.

Note: For distance-coded zero marks, this means the basic distance.

p0425[0...n] Encoder, rotary zero mark distance / Enc rot dist ZM

SERVO, VECTOR	**Can be changed:** C2(4)		**Access level:** 3
	Data type: Unsigned32	**Data set:** EDS	**Function diagram:** 4704, 6004, 8570
	P-Group: Encoder	**Units group:** -	**Unit selection:** -
	Min	**Max**	**Factory setting**
	0	16777215	2048

Description: Sets the distance in pulses between two zero marks for a rotary encoder. This information is used for zero mark monitoring.

Note: For distance-coded zero marks, this means the basic distance.

© Siemens AG, 2005. All rights reserved

p0430[0...n] Sensor Module configuration / SM config

SERVO, VECTOR	**Can be changed:** C2(4)		**Access level:** 3
	Data type: Unsigned32	**Data set:** EDS	**Function diagram:** -
	P-Group: Encoder	**Units group:** -	**Unit selection:** -
	Min	**Max**	**Factory setting**
	0000 bin	1110 0000 0000 1011 0000 0000 0000 0000 bin	1110 0000 0000 1000 0000 0000 0000 0000 bin

Description: Sets the configuration of the Sensor Module.

Bit field:

Bit	Signal name	0 signal	1 signal	FP
17	Burst oversampling	No	Yes	-
19	Safety position actual value sensing	No	Yes	-
29	Phase correction	No	Yes	-
30	Amplitude correction	No	Yes	-
31	Offset correction	No	Yes	-

p0431[0...n] Angular commutation offset / Ang_com offset

SERVO, VECTOR	**Can be changed:** C2(4)		**Access level:** 3
	Data type: Floating Point	**Data set:** EDS	**Function diagram:** -
	P-Group: Encoder	**Units group:** ANGLE	**Unit selection:** -
	Min	**Max**	**Factory setting**
	-180.00 [°]	180.00 [°]	0.00 [°]

Description: Sets the angular commutation offset.

Dependency: The value is taken into account in r0094.
Refer to: r0094, r1778

Notice: The angular commutation offset cannot be generally taken from other drive systems. As a minimum - the sign of the offset determined for SIMODRIVE 611 digital and SIMODRIVE 611 universal must be reversed for SINAMICS (p0431 (SINAMICS) = -p1016 (SIMODRIVE)).

Note: For p0404.5 = 1 (track C/D) the following applies:
The angular offset in p0431 acts on track A/B, the zero mark on track C/D.
For p0404.6 = 1 (Hall sensor) the following applies:
The angular offset in p0431 acts on track A/B and the zero mark.

p0432[0...n] Gearbox factor, numerator / Gearb_fact numer

VECTOR	**Can be changed:** C2(4)		**Access level:** 3
	Data type: Integer16	**Data set:** EDS	**Function diagram:** -
	P-Group: Encoder	**Units group:** -	**Unit selection:** -
	Min	**Max**	**Factory setting**
	1	10000	1

Description: Enters the numerator for the gearbox factor of the encoder evaluation.
The gearbox factor specifies the speed ratio between the encoder shaft and motor shaft.

Note: Negative gearbox factors should be implemented with p0410.

p0433[0...n] Gearbox factor, denominator / Gearb_fact denom

VECTOR	**Can be changed:** C2(4)		**Access level:** 3
	Data type: Integer16	**Data set:** EDS	**Function diagram:** -
	P-Group: Encoder	**Units group:** -	**Unit selection:** -
	Min	**Max**	**Factory setting**
	1	10000	1

Description: Enters the denominator for the gearbox factor of the encoder evaluation.
The gearbox factor specifies the speed ratio between the encoder shaft and motor shaft.

Note: Negative gearbox factors should be implemented with p0410.

© Siemens AG, 2005. All rights reserved

p0440[0...n] Copy encoder serial number / Copy enc ser_no

SERVO, VECTOR	**Can be changed:** C2(4)		**Access level:** 3
	Data type: Integer16	**Data set:** EDS	**Function diagram:** -
	P-Group: Encoder	**Units group:** -	**Unit selection:** -
	Min	**Max**	**Factory setting**
	0000 hex	0001 hex	0000 hex

Description: Copies the actual serial number of the encoder belong to this encoder data set to p0441 ... p0445.
Example:
For p0440[0] = 1, the serial number of the encoder belonging EDS0 is copied to p0441[0] ... p0445[0].

Values:
0: No action
1: Transfer serial number

Dependency: Refer to: p0441, p0442, p0443, p0444, p0445, r0460, r0461, r0462, r0463, r0464, p1990

Note: For encoders with serial number, encoder replacement is monitored in order to request angular commutation calibration (adjustment) for motor encoders and absolute calibration for direct measuring systems with absolute value data. The serial number, which from then onwards is used for monitoring purposes, can be transferred using p0440.
In the following cases, copying is automatically started in the following cases:
1.) When commissioning 1FT6, 1FK6, 1FK7 motors.
2.) When writing into p0431.
3.) For p1990 = 1.
p0440 is automatically set to 0 when the copying has been completed.
In order to permanently accept the copied values, it is necessary to save in a non-volatile fashion (p0977).

p0441[0...n] Encoder commissioning serial number part 1 / Enc comm ser_no 1

SERVO, VECTOR	**Can be changed:** C2(4)		**Access level:** 4
	Data type: Unsigned32	**Data set:** EDS	**Function diagram:** -
	P-Group: Encoder	**Units group:** -	**Unit selection:** -
	Min	**Max**	**Factory setting**
	0000 hex	FFFF FFFF hex	0000 hex

Description: Serial number part 1 of the encoder for the commissioning.

Dependency: Refer to: p0440, p0442, p0443, p0444, p0445, r0460, r0461, r0462, r0463, r0464
Refer to: F07414

Note: A value of zero is displayed if an encoder is not present.

p0442[0...n] Encoder commissioning serial number part 2 / Enc comm ser_no 2

SERVO, VECTOR	**Can be changed:** C2(4)		**Access level:** 4
	Data type: Unsigned32	**Data set:** EDS	**Function diagram:** -
	P-Group: Encoder	**Units group:** -	**Unit selection:** -
	Min	**Max**	**Factory setting**
	0000 hex	FFFF FFFF hex	0000 hex

Description: Serial number part 2 of the encoder for the commissioning.

Dependency: Refer to: p0440, p0441, p0443, p0444, p0445, r0460, r0461, r0462, r0463, r0464
Refer to: F07414

Note: A value of zero is displayed if an encoder is not present.

© Siemens AG, 2005. All rights reserved

p0443[0...n] Encoder commissioning serial number part 3 / Enc comm ser_no 3

SERVO, VECTOR	**Can be changed:** C2(4)		**Access level:** 4
	Data type: Unsigned32	**Data set:** EDS	**Function diagram:** -
	P-Group: Encoder	**Units group:** -	**Unit selection:** -
	Min	**Max**	**Factory setting**
	0000 hex	FFFF FFFF hex	0000 hex

Description: Serial number part 3 of the encoder for the commissioning.
Dependency: Refer to: p0440, p0441, p0442, p0444, p0445, r0460, r0461, r0462, r0463, r0464
Refer to: F07414
Note: A value of zero is displayed if an encoder is not present.

p0444[0...n] Encoder commissioning serial number part 4 / Enc comm ser_no 4

SERVO, VECTOR	**Can be changed:** C2(4)		**Access level:** 4
	Data type: Unsigned32	**Data set:** EDS	**Function diagram:** -
	P-Group: Encoder	**Units group:** -	**Unit selection:** -
	Min	**Max**	**Factory setting**
	0000 hex	FFFF FFFF hex	0000 hex

Description: Serial number part 4 of the encoder for the commissioning.
Dependency: Refer to: p0440, p0441, p0442, p0443, p0445, r0460, r0461, r0462, r0463, r0464
Refer to: F07414
Note: A value of zero is displayed if an encoder is not present.

p0445[0...n] Encoder commissioning serial number part 5 / Enc comm ser_no 5

SERVO, VECTOR	**Can be changed:** C2(4)		**Access level:** 4
	Data type: Unsigned32	**Data set:** EDS	**Function diagram:** -
	P-Group: Encoder	**Units group:** -	**Unit selection:** -
	Min	**Max**	**Factory setting**
	0000 hex	FFFF FFFF hex	0000 hex

Description: Serial number part 5 of the encoder for the commissioning.
Dependency: Refer to: p0440, p0441, p0442, p0443, p0444, r0460, r0461, r0462, r0463, r0464
Refer to: F07414
Note: A value of zero is displayed if an encoder is not present.

r0451[0...2] Commutation angle factor / Enc commut_factor

SERVO, VECTOR	**Can be changed:** -		**Access level:** 3
	Data type: Unsigned16	**Data set:** -	**Function diagram:** 4710
	P-Group: Encoder	**Units group:** -	**Unit selection:** -
	Min	**Max**	**Factory setting**
	-	-	-

Description: Displays the relationship between the electrical and mechanical pole positions.
Index: [0] = Encoder 1
[1] = Encoder 2
[2] = Encoder 3
Note: A value of zero is displayed if an encoder is not present.

© Siemens AG, 2005. All rights reserved

r0455[0...2] Encoder configuration recognized / Enc config act

SERVO, VECTOR

Can be changed: -
Access level: 3
Data type: Unsigned32
Data set: -
Function diagram: -
P-Group: Encoder
Units group: -
Unit selection: -

Min	Max	Factory setting
-	-	-

Description: Displays the detected encoder configuration.
In this case, the encoder must automatically support the function (e.g. encoder with EnDat interface).

Index: [0] = Encoder 1
[1] = Encoder 2
[2] = Encoder 3

Bit field:

Bit	Signal name	0 signal	1 signal	FP
00	Linear encoder	No	Yes	-
01	Abs value encoder	No	Yes	-
02	Multiturn encoder	No	Yes	-
03	Track A/B sq-wave	No	Yes	-
04	Track A/B sinus	No	Yes	-
05	Track C/D	No	Yes	-
06	Hall sensor	No	Yes	-
08	EnDat encoder	No	Yes	-
09	SSI encoder	No	Yes	-
12	Equidistant zero mark	No	Yes	-
13	Irregular zero mark	No	Yes	-
14	Distance-coded zero mark	No	Yes	-
15	Commutation with zero mark	No	Yes	-
16	Acceleration	No	Yes	-
20	Voltage level 5 V	No	Yes	-
21	Voltage level 24 V	No	Yes	-
22	Remote sense (only SMC30)	No	Yes	-
23	Resolver excit.	No	Yes	-

Dependency: Refer to: p0404
Note: ZM: Zero mark
This parameter is only used for diagnostics.
A value of zero is displayed if an encoder is not present.

r0456[0...2] Encoder configuration supported / Enc config supp

SERVO, VECTOR

Can be changed: -
Access level: 3
Data type: Unsigned32
Data set: -
Function diagram: -
P-Group: Encoder
Units group: -
Unit selection: -

Min	Max	Factory setting
-	-	-

Description: Contains the encoder configuration supported by the Sensor Module.

Index: [0] = Encoder 1
[1] = Encoder 2
[2] = Encoder 3

Bit field:

Bit	Signal name	0 signal	1 signal	FP
00	Linear encoder	No	Yes	-
01	Abs value encoder	No	Yes	-
02	Multiturn encoder	No	Yes	-
03	Track A/B sq-wave	No	Yes	-
04	Track A/B sinus	No	Yes	-
05	Track C/D	No	Yes	-
06	Hall sensor	No	Yes	-
08	EnDat encoder	No	Yes	-

© Siemens AG, 2005. All rights reserved

09	SSI encoder	No	Yes	-
12	Equidistant zero mark	No	Yes	-
13	Irregular zero mark	No	Yes	-
14	Distance-coded zero mark	No	Yes	-
15	Commutation with zero mark	No	Yes	-
16	Acceleration	No	Yes	-
20	Voltage level 5 V	No	Yes	-
21	Voltage level 24 V	No	Yes	-
22	Remote sense (only SMC30)	No	Yes	-
23	Resolver excit.	No	Yes	-

Dependency: Refer to: p0404

Note: ZM: Zero mark
This parameter is only used for diagnostics.
A value of zero is displayed if an encoder is not present.

r0458[0...2] Sensor Module properties / SM properties

SERVO, VECTOR

Can be changed: - **Access level:** 3
Data type: Unsigned32 **Data set:** - **Function diagram:** 4704
P-Group: Encoder **Units group:** - **Unit selection:** -

Min	Max	Factory setting
-	-	-

Description: Sets the Sensor Module configuration.

Index: [0] = Encoder 1
[1] = Encoder 2
[2] = Encoder 3

Bit field:

Bit	Signal name	0 signal	1 signal	FP
00	Encoder data available	No	Yes	-
01	Motor data available	No	Yes	-
02	KTY84 connection available	No	Yes	-
03	PTC connection available	No	Yes	-
04	Module temperature available	No	Yes	-
05	Absolute value encoder p0408/p0421, no power of 2	No	Yes	-
06	Encoder module permits parking/unparking	No	Yes	-
07	Hall sensor can be combined with actual value inversion	No	Yes	-
16	Pole position identification	No	Yes	-
17	Burst oversampling	No	Yes	-
19	Safety position actual value sensing	No	Yes	-
29	Phase correction	No	Yes	-
30	Amplitude correction	No	Yes	-
31	Offset correction	No	Yes	-

Dependency: Refer to: p0600, p0601

Note: A value of zero is displayed if an encoder is not present.

r0460[0...2] Encoder serial number part 1 / Enc ser_no 1

SERVO, VECTOR

Can be changed: - **Access level:** 3
Data type: Unsigned32 **Data set:** - **Function diagram:** -
P-Group: Encoder **Units group:** - **Unit selection:** -

Min	Max	Factory setting
-	-	-

Description: Displays the actual serial number part 1 of the appropriate encoder.

Index: [0] = Encoder 1
[1] = Encoder 2
[2] = Encoder 3

Dependency: Refer to: p0441, p0442, p0443, p0444, p0445, r0461, r0462, r0463, r0464

© Siemens AG, 2005. All rights reserved

r0461[0...2] Encoder serial number part 2 / Enc ser_no 2

SERVO, VECTOR	**Can be changed:** -		**Access level:** 3
	Data type: Unsigned32	**Data set:** -	**Function diagram:** -
	P-Group: Encoder	**Units group:** -	**Unit selection:** -
	Min	**Max**	**Factory setting**
	-	-	-

Description: Displays the actual serial number part 2 of the appropriate encoder.

Index: [0] = Encoder 1
[1] = Encoder 2
[2] = Encoder 3

Dependency: Refer to: p0441, p0442, p0443, p0444, p0445, r0460, r0462, r0463, r0464

r0462[0...2] Encoder serial number part 3 / Enc ser_no 3

SERVO, VECTOR	**Can be changed:** -		**Access level:** 3
	Data type: Unsigned32	**Data set:** -	**Function diagram:** -
	P-Group: Encoder	**Units group:** -	**Unit selection:** -
	Min	**Max**	**Factory setting**
	-	-	-

Description: Displays the actual serial number part 3 of the appropriate encoder.

Index: [0] = Encoder 1
[1] = Encoder 2
[2] = Encoder 3

Dependency: Refer to: p0441, p0442, p0443, p0444, p0445, r0460, r0461, r0463, r0464

r0463[0...2] Encoder serial number part 4 / Enc ser_no 4

SERVO, VECTOR	**Can be changed:** -		**Access level:** 3
	Data type: Unsigned32	**Data set:** -	**Function diagram:** -
	P-Group: Encoder	**Units group:** -	**Unit selection:** -
	Min	**Max**	**Factory setting**
	-	-	-

Description: Displays the actual serial number part 4 of the appropriate encoder.

Index: [0] = Encoder 1
[1] = Encoder 2
[2] = Encoder 3

Dependency: Refer to: p0441, p0442, p0443, p0444, p0445, r0460, r0461, r0462, r0464

r0464[0...2] Encoder serial number part 5 / Enc ser_no 5

SERVO, VECTOR	**Can be changed:** -		**Access level:** 3
	Data type: Unsigned32	**Data set:** -	**Function diagram:** -
	P-Group: Encoder	**Units group:** -	**Unit selection:** -
	Min	**Max**	**Factory setting**
	-	-	-

Description: Displays the actual serial number part 5 of the appropriate encoder.

Index: [0] = Encoder 1
[1] = Encoder 2
[2] = Encoder 3

Dependency: Refer to: p0441, p0442, p0443, p0444, p0445, r0460, r0461, r0462, r0463

© Siemens AG, 2005. All rights reserved

r0479[0...2] CO: Diagnostics encoder position actual value Gn_XIST1 / Diag Gn_XIST1

SERVO, VECTOR	**Can be changed:** -		**Access level:** 4
	Data type: Integer32	**Data set:** -	**Function diagram:** -
	P-Group: Encoder	**Units group:** -	**Unit selection:** -
	Min	**Max**	**Factory setting**
	-	-	-

Description: Displays the encoder actual position value Gn_XIST1 according to PROFIdrive for diagnostics. In contrast to p0482, the value is updated in each DRIVE-CLiQ basic clock cycle and displayed with sign.

Index: [0] = Encoder 1
[1] = Encoder 2
[2] = Encoder 3

r0479 CO: Diagnostics encoder position actual value Gn_XIST1 / Diag Gn_XIST1

TM41	**Can be changed:** -		**Access level:** 4
	Data type: Integer32	**Data set:** -	**Function diagram:** 9674
	P-Group: Encoder	**Units group:** -	**Unit selection:** -
	Min	**Max**	**Factory setting**
	-	-	-

Description: Displays the encoder actual position value Gn_XIST1 according to PROFIdrive for diagnostics. In contrast to p0482, the value is updated in each DRIVE-CLiQ basic clock cycle and displayed with sign.

p0480[0...2] CI: Signal source for encoder control word Gn_STW / Enc S_src Gn_STW

SERVO, VECTOR	**Can be changed:** T		**Access level:** 3
	Data type: Unsigned32	**Data set:** -	**Function diagram:** 1580, 4720
	P-Group: Encoder	**Units group:** -	**Unit selection:** -
	Min	**Max**	**Factory setting**
	-	-	0

Description: Sets the signal source for the encoder control word Gn_STW according to PROFIdrive.

Index: [0] = Encoder 1
[1] = Encoder 2
[2] = Encoder 3

r0481[0...2] CO: Encoder status word Gn_ZSW / Enc Gn_ZSW

SERVO, VECTOR	**Can be changed:** -		**Access level:** 3
	Data type: Unsigned16	**Data set:** -	**Function diagram:** 4704, 4730, 6004
	P-Group: Encoder	**Units group:** -	**Unit selection:** -
	Min	**Max**	**Factory setting**
	-	-	-

Description: Displays the encoder status word Gn_ZSW according to PROFIdrive.

Index: [0] = Encoder 1
[1] = Encoder 2
[2] = Encoder 3

© Siemens AG, 2005. All rights reserved

Bit field:	Bit	Signal name	0 signal	1 signal	FP
	00	Function 1 active	No	Yes	-
	01	Function 2 active	No	Yes	-
	02	Function 3 active	No	Yes	-
	03	Function 4 active	No	Yes	-
	04	Value 1	Does not exist	Displayed in r0483	-
	05	Value 2	Does not exist	Displayed in r0483	-
	06	Value 3	Does not exist	Displayed in r0483	-
	07	Value 4	Does not exist	Displayed in r0483	-
	08	Measuring probe 1 deflected	No	Yes	-
	09	Measuring probe 2 deflected	No	Yes	-
	11	Encoder fault acknowledge active	No	Yes	-
	13	Absolute value cyclically	No	Displayed in r0483	-
	14	Parking encoder active	No	Yes	-
	15	Encoder fault	None	Displayed in r0483	-

r0481 CO: Encoder status word Gn_ZSW / Enc Gn_ZSW

TM41

Can be changed: - **Access level:** 3

Data type: Unsigned16 **Data set:** - **Function diagram:** -

P-Group: Encoder **Units group:** - **Unit selection:** -

Min	Max	Factory setting
-	-	-

Description: Displays the encoder status word Gn_ZSW according to PROFIdrive.

Bit field:	Bit	Signal name	0 signal	1 signal	FP
	00	Function 1 active	No	Yes	-
	01	Function 2 active	No	Yes	-
	02	Function 3 active	No	Yes	-
	03	Function 4 active	No	Yes	-
	04	Value 1	Does not exist	Displayed in r0483	-
	05	Value 2	Does not exist	Displayed in r0483	-
	06	Value 3	Does not exist	Displayed in r0483	-
	07	Value 4	Does not exist	Displayed in r0483	-
	08	Measuring probe 1 deflected	No	Yes	-
	09	Measuring probe 2 deflected	No	Yes	-
	11	Encoder fault acknowledge active	No	Yes	-
	13	Absolute value cyclically	No	Displayed in r0483	-
	14	Parking encoder active	No	Yes	-
	15	Encoder fault	None	Displayed in r0483	-

Note: For Terminal Module 41 (TM41), this value is used to interconnect with standard telegram 3 and is always zero.

r0482[0...2] CO: Encoder actual position value Gn_XACT1 / Enc Gn_XIST1

SERVO, VECTOR

Can be changed: - **Access level:** 3

Data type: Unsigned32 **Data set:** - **Function diagram:** 1580, 2450, 3090, 4704, 4740

P-Group: Encoder **Units group:** - **Unit selection:** -

Min	Max	Factory setting
-	-	-

Description: Displays the encoder actual position value Gn_XIST1 according to PROFIdrive.

Index: [0] = Encoder 1
[1] = Encoder 2
[2] = Encoder 3

Note: This value is reset when de-selecting the function "parking axis".

© Siemens AG, 2005. All rights reserved

r0482 CO: Encoder actual position value Gn_XACT1 / Enc Gn_XIST1

TM41	**Can be changed:** -		**Access level:** 3
	Data type: Unsigned32	**Data set:** -	**Function diagram:** 9674
	P-Group: Encoder	**Units group:** -	**Unit selection:** -
	Min	**Max**	**Factory setting**
	-	-	-

Description: Displays the encoder actual position value Gn_XIST1 according to PROFIdrive.

r0483[0...2] CO: Encoder actual position value Gn_XACT2 / Enc Gn_XIST2

SERVO, VECTOR	**Can be changed:** -		**Access level:** 3
	Data type: Unsigned32	**Data set:** -	**Function diagram:** 1580, 2450, 4704, 6004
	P-Group: Encoder	**Units group:** -	**Unit selection:** -
	Min	**Max**	**Factory setting**
	-	-	-

Description: Displays the encoder actual position value Gn_XIST2 according to PROFIdrive.

Recommendation: Possible causes of 4097 and 4098: CU hardware defect
Possible causes of 4099 and 4100: Too many measuring pulses occurred.

Index: [0] = Encoder 1
[1] = Encoder 2
[2] = Encoder 3

Note: If Gx_ZSW.14 = 0 and GxZSW.15 = 1 (r0481), then an error code with the following significance is located in Gx_XIST2 (r0483):

1: Encoder fault
2: Reserved
3: Reserved
4: Abort, reference mark search
5: Abort, retrieve reference value
6: Abort, flying measurement
7: Abort, retrieve measured value
8: Abort, absolute value transfer
3841: Function not supported
4097: Abort, reference mark search due to an initialization error
4098: Abort, flying measurement due to an initialization error
4099: Abort, reference mark search due to a measuring error
4100: Abort, flying measurement due to a measuring error

r0483 CO: Encoder actual position value Gn_XACT2 / Enc Gn_XIST2

TM41	**Can be changed:** -		**Access level:** 3
	Data type: Unsigned32	**Data set:** -	**Function diagram:** -
	P-Group: Encoder	**Units group:** -	**Unit selection:** -
	Min	**Max**	**Factory setting**
	-	-	-

Description: Displays the encoder actual position value Gn_XIST2 according to PROFIdrive.

Note: For Terminal Module 41 (TM41), this value is used to interconnect with standard telegram 3 and is always zero.

© Siemens AG, 2005. All rights reserved

r0484[0...2] CO: Redundant coarse encoder position + CRC Gn_XIST1 / Enc red pos+CRC

SERVO, VECTOR	**Can be changed:** -		**Access level:** 3
	Data type: Unsigned32	**Data set:** -	**Function diagram:** -
	P-Group: Encoder	**Units group:** -	**Unit selection:** -
	Min	**Max**	**Factory setting**
	-	-	-

Description: Displays the redundant coarse encoder position including CRC (Cyclic Redundancy Check).
Upper 16 bits:
CRC over the redundant coarse encoder position.
Lower 16 bits:
Redundant coarse encoder position. The count direction is opposite to r0482 (encoder position actual value Gn_XIST1). The value contains 2 bit fine resolution.

Index: [0] = Encoder 1
[1] = Encoder 2
[2] = Encoder 3

Dependency: The values are valid when the safety position actual value sensing is activated (p0430.19 = 1).
Refer to: p0430

Note: This absolute value does not change, contrary to r0482, when de-selecting the function "parking axis".

r0487[0...2] Diagnostic encoder control word Gn_STW / Enc Gn_STW

SERVO, VECTOR	**Can be changed:** -		**Access level:** 3
	Data type: Unsigned16	**Data set:** -	**Function diagram:** 1580, 4704, 4720, 4740
	P-Group: Encoder	**Units group:** -	**Unit selection:** -
	Min	**Max**	**Factory setting**
	-	-	-

Description: Displays the encoder control word Gn_STW according to PROFIdrive for diagnostics.

Index: [0] = Encoder 1
[1] = Encoder 2
[2] = Encoder 3

Bit field:

Bit	Signal name	0 signal	1 signal	FP
00	Request function 1	No	Yes	-
01	Request function 2	No	Yes	-
02	Request function 3	No	Yes	-
03	Request function 4	No	Yes	-
04	Request command bit 0	No	Yes	-
05	Request command bit 1	No	Yes	-
06	Request command bit 2	No	Yes	-
07	Mode	Reference marks	Flying measurement	-
13	Request absolute value cyclic	No	Yes	-
14	Request parking encoder	No	Yes	-
15	Request acknowledge encoder fault	No	Yes	-

Note: The signal source for the encoder control word is set with p0480.

© Siemens AG, 2005. All rights reserved

p0488[0...2] Measuring probe 1 input terminal / Meas probe 1 input

SERVO, VECTOR	**Can be changed:** U, T		**Access level:** 3
	Data type: Integer16	**Data set:** -	**Function diagram:** 4740
	P-Group: Encoder	**Units group:** -	**Unit selection:** -
	Min	**Max**	**Factory setting**
	0	6	0

Description: Sets the input terminal to connect probe 1.

Values:
0: No measuring probe
1: DI/DO 9 (X122.8)
2: DI/DO 10 (X122.10)
3: DI/DO 11 (X122.11)
4: DI/DO 13 (X132.8)
5: DI/DO 14 (X132.10)
6: DI/DO 15 (X132.11)

Index:
[0] = Encoder 1
[1] = Encoder 2
[2] = Encoder 3

Dependency: Refer to: p0489, p0490, p0728

Note: DI/DO: Bidirectional Digital Input/Output
The terminal must be set as input (p0728).
Refer to the encoder interface for PROFIdrive.

p0489[0...2] Measuring probe 2 input terminal / Meas probe 2 input

SERVO, VECTOR	**Can be changed:** U, T		**Access level:** 3
	Data type: Integer16	**Data set:** -	**Function diagram:** 4740
	P-Group: Encoder	**Units group:** -	**Unit selection:** -
	Min	**Max**	**Factory setting**
	0	6	0

Description: Sets the input terminal to connect probe 2.

Values:
0: No meas probe
1: DI/DO 9 (X122.8)
2: DI/DO 10 (X122.10)
3: DI/DO 11 (X122.11)
4: DI/DO 13 (X132.8)
5: DI/DO 14 (X132.10)
6: DI/DO 15 (X132.11)

Index:
[0] = Encoder 1
[1] = Encoder 2
[2] = Encoder 3

Dependency: Refer to: p0488, p0490, p0728

Note: DI/DO: Bidirectional Digital Input/Output
The terminal must be set as input (p0728).
Refer to the encoder interface for PROFIdrive.

© Siemens AG, 2005. All rights reserved

p0490 Invert measuring probe or equivalent zero mark / Meas. probe invert

CU_S

Can be changed: U, T — **Access level:** 3
Data type: Unsigned32 — **Data set:** - — **Function diagram:** 4740
P-Group: Encoder — **Units group:** - — **Unit selection:** -

Min	Max	Factory setting
0000 bin	1111 1111 1111 1111 bin	0000 bin

Description: Setting to invert the digital input signals to connect a measuring probe or an equivalent zero mark.

Bit field:

Bit	Signal name	0 signal	1 signal	FP
09	DI/DO 9 (X122.8)	Not inverted	Inverted	-
10	DI/DO 10 (X122.10)	Not inverted	Inverted	-
11	DI/DO 11 (X122.11)	Not inverted	Inverted	-
13	DI/DO 13 (X132.8)	Not inverted	Inverted	-
14	DI/DO 14 (X132.10)	Not inverted	Inverted	-
15	DI/DO 15 (X132.11)	Not inverted	Inverted	-

Dependency: Refer to: p0488, p0489, p0495, p0728

Note: The terminal must be set as input.
When the measuring probe or the equivalent zero mark is inverted, this has no effect on the status displays of the digital inputs (r0721, r0722, r0723).
DI: Digital input, DO: Digital output

p0491 Motor encoder fault response: ENCODER / Fault resp ENCODER

SERVO, VECTOR

Can be changed: T — **Access level:** 3
Data type: Integer16 — **Data set:** - — **Function diagram:** -
P-Group: Encoder — **Units group:** - — **Unit selection:** -

Min	Max	Factory setting
0	3	0

Description: Sets the behavior for the ENCODER fault response (motor encoder).
This means, for example, if an encoder fault occurs, sensorless operation can be automatically selected with a shutdown behavior that can be selected.

Values:
0: Encoder fault results in OFF2
1: Enc fault results in sensorless oper. and oper. continues
2: Encoder fault results in sensorless operation and OFF1
3: Encoder fault results in sensorless operation and OFF3

Dependency: The following parameters are relevant for sensorless operation.
Refer to: p0341, p0342, p1470, p1472, p1517, p1612, p1755

Note: For a value 1, 2, 3, the following applies:
Encoderless operation must have been commissioned.
Refer to the status display "sensorless operation due to a fault" (BO: r1407.13).

p0492 Square-wave encoder, maximum speed difference per sampling cycle / n_dif max/samp_cyc

SERVO, VECTOR

Can be changed: U, T — **Access level:** 3
Data type: Floating Point — **Data set:** - — **Function diagram:** -
P-Group: Encoder — **Units group:** SPEED_ROT — **Unit selection:** -

Min	Max	Factory setting
0.0 [1/min]	210000.0 [1/min]	0.0 [1/min]

Description: Maximum permissible speed/velocity difference between two computation cycles when evaluating square-wave encoders.
When the value is exceeded, depending on p0491, either sensorless closed-loop speed/torque control is selected or the drive is powered-down.

© Siemens AG, 2005. All rights reserved

Note: For a value of 0.0, the speed change monitoring is disabled.
When half of the parameter value is exceeded, an alarm is already generated and the speed limiting is limited to this.
The parameter is only pre-assigned for VECTOR drives when selecting p0340 = 1, 3.

p0492 Square-wave encoder, max. velocity difference per sampling cycle / n_dif max/samp_cyc

SERVO (Lin)

Can be changed: U, T		**Access level:** 3
Data type: Floating Point	**Data set:** -	**Function diagram:** -
P-Group: Encoder	**Units group:** SPEED_LIN_METRIC_P3	**Unit selection:** -
Min	**Max**	**Factory setting**
0.0 [m/min]	1000.0 [m/min]	0.0 [m/min]

Description: Maximum permissible speed/velocity difference between two computation cycles when evaluating square-wave encoders.
When the value is exceeded, depending on p0491, either sensorless closed-loop speed/torque control is selected or the drive is powered-down.

Note: For a value of 0.0, the speed change monitoring is disabled.
When half of the parameter value is exceeded, an alarm is already generated and the speed limiting is limited to this.
The parameter is only pre-assigned for VECTOR drives when selecting p0340 = 1, 3.

p0495[0...2] Equivalent zero mark, input terminal / Zero mark input

SERVO, VECTOR

Can be changed: U, T		**Access level:** 3
Data type: Integer16	**Data set:** -	**Function diagram:** 4735
P-Group: Encoder	**Units group:** -	**Unit selection:** -
Min	**Max**	**Factory setting**
0	6	0

Description: Selects the input terminal for connecting an equivalent zero mark (external encoder zero mark).

Values:
0: No equivalent zero mark (evaluation of the encoder zero mark)
1: DI/DO 9 (X122.8)
2: DI/DO 10 (X122.10)
3: DI/DO 11 (X122.11)
4: DI/DO 13 (X132.8)
5: DI/DO 14 (X132.10)
6: DI/DO 15 (X132.11)

Index:
[0] = Encoder 1
[1] = Encoder 2
[2] = Encoder 3

Dependency: Refer to: p0490

Note: Refer to the encoder interface for PROFIdrive.
The terminal must be set as input.
For p0495 = 0 (factory setting), the encoder zero mark is evaluated as zero mark.
For p0495 > 0, the following applies:
Depending on the direction of motion, the positive or negative edge at the appropriate input is evaluated.
- increasing position actual values (r0482) --> the 0/1 edge is evaluated.
- decreasing position actual values (r0482) --> the 1/0 edge is evaluated.
Only one zero mark is supported. If function 2, 3 or 4 is selected, this results in an error message in Gn_ZSW.
The inversion of the inputs via p0490 affects the function "referencing with equivalent zero mark". This is the reason that the edge evaluation is interchanged as a function of the direction of motion.
An input can only be assigned to one encoder as measuring probe 1, 2 or equivalent zero mark. Exception: The same encoder can be simultaneously used as measuring probe and equivalent zero mark as both functions cannot be simultaneously requested.

© Siemens AG, 2005. All rights reserved

p0496[0...2] Encoder diagnostic signal selection / Enc diag selection

SERVO, VECTOR	**Can be changed:** U, T		**Access level:** 4
	Data type: Integer16	**Data set:** -	**Function diagram:** -
	P-Group: Encoder	**Units group:** -	**Unit selection:** -
	Min	**Max**	**Factory setting**
	0	42	0

Description: Selects the trace signal to be output in r0497, r0498 and r0499 for encoder diagnostics.

Values:
0: not active
1: r0497: Mechanical revolution
10: r0498: Raw value, track A, r0499: Raw value, track B
11: r0498: Fine position X (-A/2), r0499: Fine position Y (-B/2)
12: r0498: Fine pos phi, r0499: -
13: r0498: Offset correction X; r0499: Offset correction Y
14: r0498: Phase correction X; r0499: Amplitude correction Y
20: r0498: Raw value, track C, r0499: Raw value track D
21: r0498: CD position X (-D/2), r0499: CD position Y (C/2)
22: r0498: CD position phi, r0499: CD pos. phi - mech. revolution
23: r0497: Zero mark status
30: r0497: Absolute position serial
31: r0497: Incremental absolute position
40: r0498: Raw temperature, r0499: Temperature in 0.1 °C
41: r0498: Resistance in 0.1 Ohm, r0499: Temperature in 0.1 °C
42: r0497: Resistance 2500 Ohm

Index:
[0] = Encoder 1
[1] = Encoder 2
[2] = Encoder 3

Note:
Re p0496 = 1: 360 ° <--> 2^32
Re p0496 = 10, 20 (resolver): 2900 mV <--> 26214 dec
Re p0496 = 10, 20 (sin/cos 1 Vpp, EnDat): 500 mV <--> 21299 dec
Re p0496 = 11, 21 (resolver): 2900 mV <--> 13107 dec, internal processor offset is corrected
Re p0496 = 13 (resolver): 2900 mV <--> 13107 dec
Re p0496 = 11, 21 (sin/cos 1 Vpp, EnDat): 500 mV <--> 10650 dec, internal processor offset is corrected
Re p0496 = 13 (sin/cos 1 Vpp, EnDat): 500 mV <--> 10650 dec
Re p0496 = 12: 180 ° fine position <--> 32768 dec
Re p0496 = 14: 100 % <--> 16384 dec
Re p0496 = 22: 180 ° <--> 32768 dec
Re p0496 = 23: Encoder zero mark <--> MSB set (detected during the zero mark or at least 1 current controller clock cycle)
Re p0496 = 30: Rotary: 1 Single-turn measuring step <--> 1 dec, linear: 1 measuring step <--> 1 dec
Re p0496 = 40: r0498 <--> (R_KTY/1 kOhm - 0.9) * 32768
Re p0496 = 42: 2500 Ohm <--> 2^32

r0497[0...2] Encoder diagnostic signal double word / Enc diag DW

SERVO, VECTOR	**Can be changed:** -		**Access level:** 4
	Data type: Unsigned32	**Data set:** -	**Function diagram:** -
	P-Group: Encoder	**Units group:** -	**Unit selection:** -
	Min	**Max**	**Factory setting**
	-	-	-

Description: Trace signal for encoder diagnostics (double word representation). The output signal is selected in p0496.

Index:
[0] = Encoder 1
[1] = Encoder 2
[2] = Encoder 3

© Siemens AG, 2005. All rights reserved

r0498[0...2] Encoder diagnostic signal word low / Enc diag word low

SERVO, VECTOR

Can be changed: -
Access level: 4
Data type: Integer16
Data set: -
Function diagram: -
P-Group: Encoder
Units group: -
Unit selection: -

Min	Max	Factory setting
-	-	-

Description: Trace signal for encoder diagnostics (low component). The output signal is selected in p0496.

Index:
[0] = Encoder 1
[1] = Encoder 2
[2] = Encoder 3

r0499[0...2] Encoder diagnostic signal word high / Enc diag word high

SERVO, VECTOR

Can be changed: -
Access level: 4
Data type: Integer16
Data set: -
Function diagram: -
P-Group: Encoder
Units group: -
Unit selection: -

Min	Max	Factory setting
-	-	-

Description: Trace signal for encoder diagnostics (high component). The output signal is selected in p0496.

Index:
[0] = Encoder 1
[1] = Encoder 2
[2] = Encoder 3

p0500 Technology application / Techn application

SERVO

Can be changed: C2(1, 5), T
Access level: 2
Data type: Integer16
Data set: -
Function diagram: -
P-Group: Applications
Units group: -
Unit selection: -

Min	Max	Factory setting
100	102	100

Description: Sets the technology application.
The parameter influences the calculation of open-loop and closed-loop control parameters that is e.g. initiated using p0578.
The calculation of the following parameters depends on p0500 (only for servo drives): p1520, p1521, p1530, p1531

Values:
100: Standard drive (SERVO)
101: Feed drive (limit current limitation)
102: Spindle drive (rated current limitation)

Note: The calculation of parameters, dependent on the technological application can be called-up as follows:
- when exiting the quick commissioning using p3900 > 0
- when writing p0340 = 1, 3, 5
- when writing p0578 = 1

p0500 Technology application / Techn application

VECTOR

Can be changed: C2(1, 5), T
Access level: 2
Data type: Integer16
Data set: -
Function diagram: -
P-Group: Applications
Units group: -
Unit selection: -

Min	Max	Factory setting
0	1	1

Description: Sets the technology application.
The parameter influences the calculation of open-loop and closed-loop control parameters that is e.g. initiated using p0578.
The calculation of the following parameters depends on p0500 (only for servo drives): p1520, p1521, p1530, p1531

Values:
0: Standard drive (VECTOR)
1: Pumps and fans

© Siemens AG, 2005. All rights reserved

Note: The calculation of parameters, dependent on the technological application can be called-up as follows:
- when exiting the quick commissioning using p3900 > 0
- when writing p0340 = 1, 3, 5
- when writing p0578 = 1

p0528 Units system for controller gains / Units for Kp

SERVO, TM41

Can be changed: C2(5)		**Access level:** 4
Data type: Integer16	**Data set:** -	**Function diagram:** -
P-Group: Applications	**Units group:** -	**Unit selection:** -
Min	**Max**	**Factory setting**
0	1	0

Description: For controller gains, changes-over the units system between physical and referred (without dimensions) representation types.

Values:
0: Physical representation
1: No dimensions (referred) representation type

Note: Controller gain factors are always saved as physical units.
For VECTOR (r0107) the following applies:
The parameter is pre-assigned a value of 1. The parameter cannot be changed.

p0528 Units system for controller gains / Units for Kp

VECTOR

Can be changed: C2(5)		**Access level:** 4
Data type: Integer16	**Data set:** -	**Function diagram:** -
P-Group: Applications	**Units group:** -	**Unit selection:** -
Min	**Max**	**Factory setting**
0	1	1

Description: For controller gains, changes-over the units system between physical and referred (without dimensions) representation types.

Values:
0: Physical representation
1: No dimensions (referred) representation type

Note: Controller gain factors are always saved as physical units.
For VECTOR (r0107) the following applies:
The parameter is pre-assigned a value of 1. The parameter cannot be changed.

p0578[0...n] Calculate parameters that are dependent on the technology/units / Calc techn par

SERVO, VECTOR

Can be changed: C2(5), T		**Access level:** 2
Data type: Integer16	**Data set:** DDS	**Function diagram:** -
P-Group: Applications	**Units group:** -	**Unit selection:** -
Min	**Max**	**Factory setting**
0	1	0

Description: This parameter is used to calculate all parameters that depend on the technology of the application (p0500).
All of the parameters are calculated that can also be determined using p0340 = 5.

Values:
0: No calculation
1: Complete parameterization

Note: At the end of the calculations, p0578 is automatically set to 0.

© Siemens AG, 2005. All rights reserved

p0580 Measuring probe, input terminal / Meas probe term

SERVO

Can be changed: U, T		**Access level:** 3
Data type: Integer16	**Data set:** -	**Function diagram:** -
P-Group: Encoder	**Units group:** -	**Unit selection:** -
Min	**Max**	**Factory setting**
0	6	0

Description: Sets the input terminal for the measuring probe for speed actual value measurement.

Values:
0: No meas probe
1: DI/DO 9 (X122.8)
2: DI/DO 10 (X122.10)
3: DI/DO 11 (X122.11)
4: DI/DO 13 (X132.8)
5: DI/DO 14 (X132.10)
6: DI/DO 15 (X132.11)

Dependency: Refer to: p0581, p0728
Refer to: A07350

Note: DI/DO: Bidirectional Digital Input/Output
The terminal must be set as input (p0728).

p0581 Meas probe, edge / Meas probe, edge

SERVO

Can be changed: U, T		**Access level:** 3
Data type: Integer16	**Data set:** -	**Function diagram:** -
P-Group: Encoder	**Units group:** -	**Unit selection:** -
Min	**Max**	**Factory setting**
0	1	0

Description: Sets the edge to evaluate the measuring probe signal for speed actual value measurement.
0: 0/1 edge
1: 1/0 edge

Dependency: Refer to: p0580

p0582 Measuring probe, pulses per revolution / Meas probe pulses

SERVO

Can be changed: U, T		**Access level:** 3
Data type: Unsigned16	**Data set:** -	**Function diagram:** -
P-Group: Encoder	**Units group:** -	**Unit selection:** -
Min	**Max**	**Factory setting**
1	8	1

Description: Sets the number of pulses per revolution (e.g. for disks with holes).

p0583 Measuring probe, maximum measuring time / Meas probe t_max

SERVO

Can be changed: U, T		**Access level:** 3
Data type: Floating Point	**Data set:** -	**Function diagram:** -
P-Group: Encoder	**Units group:** TIME	**Unit selection:** -
Min	**Max**	**Factory setting**
0 [s]	10 [s]	10 [s]

Description: Sets the maximum measuring time for the measuring probe.
If a new pulse is not received before the maximum measuring time has expired, then the speed actual value in r0586 is set to zero. This timer stage is re-started with the next pulse.

Dependency: Refer to: r0586

© Siemens AG, 2005. All rights reserved

r0586 CO: Measuring probe, speed actual value / Meas probe n_act

SERVO	**Can be changed:** -		**Access level:** 3
	Data type: Floating Point	**Data set:** -	**Function diagram:** -
	P-Group: Displays, signals	**Units group:** SPEED_ROT	**Unit selection:** -
	Min	**Max**	**Factory setting**
	- [1/min]	- [1/min]	- [1/min]

Description: Displays the speed actual value measured using the BERO.
Dependency: Refer to: p0580, p0583
Note: If a measuring probe is not selected (p580 = 0), then a value of zero is displayed.

r0586 CO: Measuring probe, velocity actual value / Meas probe n_act

SERVO (Lin)	**Can be changed:** -		**Access level:** 3
	Data type: Floating Point	**Data set:** -	**Function diagram:** -
	P-Group: Displays, signals	**Units group:** SPEED_LIN_METRIC_P3	**Unit selection:** -
	Min	**Max**	**Factory setting**
	- [m/min]	- [m/min]	- [m/min]

Description: Displays the speed actual value measured using the BERO.
Dependency: Refer to: p0580, p0583
Note: If a measuring probe is not selected (p580 = 0), then a value of zero is displayed.

r0587 CO: Measuring probe, measuring time measured / Meas probe t_meas

SERVO	**Can be changed:** -		**Access level:** 3
	Data type: Unsigned32	**Data set:** -	**Function diagram:** -
	P-Group: Displays, signals	**Units group:** -	**Unit selection:** -
	Min	**Max**	**Factory setting**
	-	-	-

Description: Displays the time between the last two BERO pulses.
The measuring time is specified as 32-bit value with a resolution of 1/48 μs.
If a new pulse is not received before the maximum measured time in p0583 expires, then r0587 is set to the maximum measuring time.
Dependency: Refer to: p0580
Note: If a measuring probe is not selected (p580 = 0), then a value of zero is displayed.

r0588 CO: Measuring probe, pulse counter / Meas probe P_count

SERVO	**Can be changed:** -		**Access level:** 3
	Data type: Unsigned32	**Data set:** -	**Function diagram:** -
	P-Group: Displays, signals	**Units group:** -	**Unit selection:** -
	Min	**Max**	**Factory setting**
	-	-	-

Description: Displays the number of measuring pulses that have occurred (been received) up until now.
Dependency: Refer to: p0580
Note: After reaching 4294967295 (2^32 - 1), the counter starts again at 0.

© Siemens AG, 2005. All rights reserved

r0589 Measuring probe, delay time / Meas probe t_delay

SERVO

Can be changed: -
Access level: 3
Data type: Unsigned32
Data set: -
Function diagram: -
P-Group: Displays, signals
Units group: -
Unit selection: -

Min	Max	Factory setting
-	-	-

Description: Displays the time since the last measuring pulse was detected.
The delay time is specified as 32-bit value with a resolution of 1/48 µs.
When a measuring pulse occurs (is received) the delay time is reset and is limited to the maximum measuring time in p0583.

Dependency: Refer to: p0580

Note: If a measuring probe is not selected (p580 = 0), then a value of zero is displayed.

p0600[0...n] Motor temperature sensor for monitoring / Mot temp_sensor

SERVO, VECTOR

Can be changed: C2(3), U, T
Access level: 2
Data type: Integer16
Data set: MDS
Function diagram: 8016
P-Group: Motor
Units group: -
Unit selection: -

Min	Max	Factory setting
0	11	1

Description: Sets the sensor to monitor the motor temperature.

Values:
0: No sensor
1: Temperature sensor via encoder 1
2: Temperature sensor via encoder 2
3: Temperature sensor via encoder 3
10: Temperature sensor via a BICO interconnection
11: Temperature sensor via Motor Module

Dependency: Refer to: r0458, p0601, p0603

Note: For a value = 0, for synchronous motors, the temperature monitoring function is disabled.
For a value = 10, the BICO interconnection should be executed via p0603.

p0601[0...n] Motor temperature sensor type / Mot temp_sensortyp

SERVO, VECTOR

Can be changed: C2(3), U, T
Access level: 2
Data type: Integer16
Data set: MDS
Function diagram: 8016
P-Group: Motor
Units group: -
Unit selection: -

Min	Max	Factory setting
0	3	2

Description: Sets the sensor type for the motor temperature monitoring.

Values:
0: No sensor available
1: PTC thermistor
2: KTY84
3: KTY84 and PTC (only for temperature sensor via encoder)

Dependency: Refer to: r0458, p0600

Note: PTC thermistor (p0601 = 1): Trip resistance = 1650 Ohm.
The temperature sensor for the temperature evaluation is set in p0600.
For p0600 = 10 (temperature sensor via a BICO interconnection), the setting in p0601 has no significance.

© Siemens AG, 2005. All rights reserved

p0602 Par_circuit power module number, temperature sensor / PM_no. temp_sensor

VECTOR (Parallel)

Can be changed: C2(3), U, T		**Access level:** 2
Data type: Unsigned16	**Data set:** -	**Function diagram:** -
P-Group: Motor	**Units group:** -	**Unit selection:** -
Min	**Max**	**Factory setting**
0	10	0

Description: Sets the power module number to which the temperature sensor is connected. The value corresponds to the Power Module Data Set number (PDS) of the power module. The number power module data sets is defined in parameter p0120.

p0603 CI: Motor temperature / Mot temperature

SERVO, VECTOR

Can be changed: C2(3), T		**Access level:** 2
Data type: Unsigned32	**Data set:** -	**Function diagram:** 8016
P-Group: Motor	**Units group:** -	**Unit selection:** -
Min	**Max**	**Factory setting**
-	-	0

Description: Sets the signal source to evaluate the motor temperature via a BICO interconnection.
Dependency: Refer to: p0600
Note: KTY temperature sensor: Valid temperature range -48 °C ... 248 °C.
PTC temperature sensor:
For the -50 °C, the following applies: Motor temperature < nominal response temperature of the PTC.
For the 250 °C, the following applies: Motor temperature >= nominal response temperature of the PTC.
Note:
When using a Terminal Module 31 (TM31), the following applies:
- the sensor type used is set using p4100.
- the temperature signal is interconnected using CO: r4105.

p0604[0...n] Motor overtemperature alarm threshold / Mot TempAlrmThresh

SERVO, VECTOR

Can be changed: C2(3), U, T		**Access level:** 2
Data type: Floating Point	**Data set:** MDS	**Function diagram:** 8016
P-Group: Motor	**Units group:** TEMPERATURE	**Unit selection:** -
Min	**Max**	**Factory setting**
0.0 [°C]	200.0 [°C]	120.0 [°C]

Description: Sets the alarm threshold for monitoring the motor temperature.
Note: The parameter is automatically preset for motors from the motor list (p0301).

p0605[0...n] Motor overtemperature fault threshold / MotTempFaultThresh

SERVO, VECTOR

Can be changed: C2(3), U, T		**Access level:** 2
Data type: Floating Point	**Data set:** MDS	**Function diagram:** 8016
P-Group: Motor	**Units group:** TEMPERATURE	**Unit selection:** -
Min	**Max**	**Factory setting**
0.0 [°C]	200.0 [°C]	155.0 [°C]

Description: Sets the fault threshold to monitor the motor temperature.
Note: The parameter is automatically preset for motors from the motor list (p0301).

© Siemens AG, 2005. All rights reserved

p0606[0...n] Motor overtemperature timer / Mot TempTimeStage

SERVO, VECTOR	**Can be changed:** C2(3), U, T		**Access level:** 2
	Data type: Floating Point	**Data set:** MDS	**Function diagram:** 8016
	P-Group: Motor	**Units group:** TIME	**Unit selection:** -
	Min	**Max**	**Factory setting**
	0.000 [s]	600.000 [s]	240.000 [s]

Description: Sets the timer stage for the alarm threshold for the motor temperature monitoring function.
This timer stage is started when the temperature alarm threshold (p0604) is exceeded.
If the timer stage expires before the temperature in the meantime falls below the alarm threshold, the fault F07011 is output.
If the temperature fault threshold (p0605) is prematurely exceeded before the timer stage has expired, then fault F07011 is immediately output. As long as the motor temperature has still not exceeded the fault threshold, the fault can be acknowledged.

Dependency: Refer to: p0604, p0605
Refer to: F07011, A07910

Note: With p0606 = 0 s, the timer stage is de-activated and only the fault threshold is effective.
KTY sensor: When setting the minimum value, the timer is disabled and a fault is not output until p0605 is exceeded.
PTC sensor: The timer minimum value has no particular significance.

p0607[0...n] Temperature sensor fault timer / Sensor fault time

SERVO, VECTOR	**Can be changed:** C2(3), U, T		**Access level:** 2
	Data type: Floating Point	**Data set:** MDS	**Function diagram:** -
	P-Group: Motor	**Units group:** TIME	**Unit selection:** -
	Min	**Max**	**Factory setting**
	0.000 [s]	600.000 [s]	0.100 [s]

Description: Sets the timer stage between the output of alarm and fault for a temperature sensor fault.
If there is a sensor fault, this timer stage is started. If the sensor fault is still present after the timer stage has expired, a corresponding fault message is output.

Note: If the motor is an induction motor, the timer is switched off when setting the minimum value and no alarm is output. Temperature monitoring is then based on the thermal model.

p0610[0...n] Response to motor overtemperature condition / Mot temp response

VECTOR	**Can be changed:** C2(3), T		**Access level:** 2
	Data type: Integer16	**Data set:** MDS	**Function diagram:** 8016
	P-Group: Motor	**Units group:** -	**Unit selection:** -
	Min	**Max**	**Factory setting**
	0	2	2

Description: Sets the system response when the motor temperature reaches the alarm threshold.

Values:
0: No response, only alarm, no reduction of I_max
1: Alarm and reduction of I_max and fault (F07011)
2: Alarm and fault (F07011), no reduction of I_max

Dependency: Refer to: p0601, p0604, p0605

Note: the I_max reduction is not executed for PTC (p0601 = 1).
The I_max reduction results in a lower output frequency.

© Siemens AG, 2005. All rights reserved

p0620[0...n] Thermal adaptation, stator and rotor resistance / Mot therm_adapt R

SERVO, VECTOR	**Can be changed:** C2(3), U, T		**Access level:** 2
	Data type: Integer16	**Data set:** MDS	**Function diagram:** -
	P-Group: Motor	**Units group:** -	**Unit selection:** -
	Min	**Max**	**Factory setting**
	0	2	2

Description: Sets the thermal adaptation of the stator/primary section resistance and rotor/secondary section resistance according to r0395 and r0396.

Values:
0: No thermal adaptation of stator and rotor resistances
1: Resistances adapted to the temperatures of the thermal model
2: Resistances adapted to the measured stator winding temperature

Note: For p0620 = 1, the following applies:
The stator resistance is adapted using the temperature in r0035 and the rotor resistance together with the model temperature in r0633.
For p0620 = 2, the following applies:
The stator resistance is adapted using the temperature in r0035. The rotor temperature to adapt the rotor resistance is calculated as follows from the stator temperature (r0035).
theta_R = (r0628 + r0625) / (r0627 + r0625) * r0035

p0621[0...n] Temperature identification after restart / Temp_ident restart

VECTOR (n/M)	**Can be changed:** C2(3), T		**Access level:** 2
	Data type: Integer16	**Data set:** MDS	**Function diagram:** -
	P-Group: Motor	**Units group:** -	**Unit selection:** -
	Min	**Max**	**Factory setting**
	0	2	0

Description: Configuration of the temperature identification after powering-up again. If the identification is selected, when powering-up for the first time after the system run-up, the stator resistance is measured and from this the temperature determined. The thermal model is then suitably initialized.

Values:
0: No temperature identification
1: Temperature identification after restart
2: Temperature identification after each power-up

p0622[0...n] Motor excitation time for temp_ident after powering-up again / t_excit temp_id

VECTOR (n/M)	**Can be changed:** C2(3), U, T		**Access level:** 3
	Data type: Floating Point	**Data set:** MDS	**Function diagram:** -
	P-Group: Motor	**Units group:** TIME	**Unit selection:** -
	Min	**Max**	**Factory setting**
	0.000 [s]	20.000 [s]	0.000 [s]

Description: Sets the excitation time of the motor during the temperature identification after powering-up again (restart).

r0623 Stator resistance after temperature identification / Temp Id resist.

VECTOR (n/M)	**Can be changed:** -		**Access level:** 4
	Data type: Floating Point	**Data set:** -	**Function diagram:** -
	P-Group: Motor identification	**Units group:** RESISTANCE	**Unit selection:** -
	Min	**Max**	**Factory setting**
	- [Ohm]	- [Ohm]	- [Ohm]

Description: Displays the identified stator resistance after the temperature identification run.

© Siemens AG, 2005. All rights reserved

p0625[0...n] Motor ambient temperature / Mot T_ambient

SERVO, VECTOR	**Can be changed:** C2(3), U, T		**Access level:** 3
	Data type: Floating Point	**Data set:** MDS	**Function diagram:** 8016
	P-Group: Motor	**Units group:** TEMPERATURE	**Unit selection:** -
	Min	**Max**	**Factory setting**
	-40 [°C]	80 [°C]	20 [°C]

Description: Defines the ambient temperature of the motor to calculate the temperature model.
Note: The parameters for stator and rotor resistance (p0350, p0354) refer to this temperature.

p0626[0...n] Motor overtemperature, stator core / Mot T_over core

SERVO, VECTOR	**Can be changed:** C2(3), U, T		**Access level:** 3
	Data type: Floating Point	**Data set:** MDS	**Function diagram:** 8016
	P-Group: Motor	**Units group:** TEMPERATURE_K	**Unit selection:** -
	Min	**Max**	**Factory setting**
	20 [K]	200 [K]	50 [K]

Description: Defines the rated overtemperature of the stator core referred to the ambient temperature.
Dependency: Refer to: p0625

p0627[0...n] Motor overtemperature, stator winding / Mot T_over stator

SERVO, VECTOR	**Can be changed:** C2(3), U, T		**Access level:** 3
	Data type: Floating Point	**Data set:** MDS	**Function diagram:** 8016
	P-Group: Motor	**Units group:** TEMPERATURE_K	**Unit selection:** -
	Min	**Max**	**Factory setting**
	20 [K]	200 [K]	80 [K]

Description: Defines the rated overtemperature of the stator winding referred to the ambient temperature.
Dependency: Refer to: p0625

p0628[0...n] Rotor winding overtemperature / Mot T_over rotor

SERVO, VECTOR	**Can be changed:** C2(3), U, T		**Access level:** 3
	Data type: Floating Point	**Data set:** MDS	**Function diagram:** 8016
	P-Group: Motor	**Units group:** TEMPERATURE_K	**Unit selection:** -
	Min	**Max**	**Factory setting**
	20 [K]	200 [K]	100 [K]

Description: Defines the rated overtemperature of the squirrel cage rotor referred to ambient temperature.
Dependency: Refer to: p0625

r0630[0...n] Motor temperature model ambient temperature / MotTMod T_amb.

SERVO, VECTOR	**Can be changed:** -		**Access level:** 4
	Data type: Floating Point	**Data set:** MDS	**Function diagram:** 8016
	P-Group: Motor	**Units group:** TEMPERATURE	**Unit selection:** -
	Min	**Max**	**Factory setting**
	- [°C]	- [°C]	- [°C]

Description: Displays the ambient temperature of the motor temperature model.

© Siemens AG, 2005. All rights reserved

r0631[0...n] Motor temperature model, stator core temperature / MotTMod T_iron

SERVO, VECTOR	**Can be changed:** -		**Access level:** 4
	Data type: Floating Point	**Data set:** MDS	**Function diagram:** 8016
	P-Group: Motor	**Units group:** TEMPERATURE	**Unit selection:** -
	Min	**Max**	**Factory setting**
	- [°C]	- [°C]	- [°C]

Description: Displays the stator core temperature of the motor temperature model.

r0632[0...n] Motor temperature model, stator winding temperature / MotTMod T_copper

SERVO, VECTOR	**Can be changed:** -		**Access level:** 4
	Data type: Floating Point	**Data set:** MDS	**Function diagram:** 8016
	P-Group: Motor	**Units group:** TEMPERATURE	**Unit selection:** -
	Min	**Max**	**Factory setting**
	- [°C]	- [°C]	- [°C]

Description: Displays the stator winding temperature of the motor temperature model.

r0633[0...n] Motor temperature model, rotor temperature / MotTMod T_rotor

SERVO, VECTOR	**Can be changed:** -		**Access level:** 4
	Data type: Floating Point	**Data set:** MDS	**Function diagram:** 8016
	P-Group: Motor	**Units group:** TEMPERATURE	**Unit selection:** -
	Min	**Max**	**Factory setting**
	- [°C]	- [°C]	- [°C]

Description: Displays the rotor temperature of the motor temperature model.

p0640[0...n] Current limit / Current limit

SERVO, VECTOR	**Can be changed:** C2(1, 3), U, T		**Access level:** 2
	Data type: Floating Point	**Data set:** DDS	**Function diagram:** 5722, 6640
	P-Group: Motor	**Units group:** CURRENT_AC_EFF	**Unit selection:** -
	Min	**Max**	**Factory setting**
	0.00 [Aeff]	10000.00 [Aeff]	0.00 [Aeff]

Description: Sets the current limit.

Dependency: Refer to: r0209, p0323

Note: The current limit p0640 is limited to r0209 and p0323. The limit to p0323 is not realized if a value of zero is entered there.

For VECTOR drives, the following additionally applies (refer to p0107): p0640 is limited to 4.0 * p0305.

The resulting current limit is displayed in r0067 and if required, r0067 is reduced by the thermal model of the Motor Module.

The torque and power limits (p1520, p1521, p1530, p1531) matching the current limit are automatically calculated when exiting the quick commissioning using p3900 > 0 or using the automatic parameterization with p0340 = 3, 5.

For servo drives, the following applies (refer to p0107):

p0640 is pre-assigned as follows using the automatic parameterization (p0340 = 1, p3900 > 0) taking into account the limits r0209 and r0323:

- for induction motors: p0640 = 1.5 * p0305
- for synchronous motors: p0640 = p0338

For VECTOR drives (refer to p0107), the following applies:

p0640 is pre-assigned for the automatic self commissioning routine (e.g.to 1.5 * p0305, with p0305 = r0207[1]).

p0640 must be entered when commissioning the system. This is the reason that p0640 is not calculated by the automatic parameterization when exiting the fast commissioning (p3900 > 0).

© Siemens AG, 2005. All rights reserved

p0643[0...n] Overvoltage protection for synchronous motors / Overvolt_protect

SERVO	**Can be changed:** T		**Access level:** 3
	Data type: Integer16	**Data set:** MDS	**Function diagram:** -
	P-Group: -	**Units group:** -	**Unit selection:** -
	Min	**Max**	**Factory setting**
	0	1	0

Description: Sets the overvoltage protection for synchronous motors in the field-weakening range.

Values:
0: No measure
1: Voltage Protection Module (VPM)

Dependency: Refer to: p0316, p1082, p9601, p9801
Refer to: F07432

Note: In the field-weakening range, synchronous motors can, when a fault condition exists, generate high DC link voltages. The following possibilities exist to protect the drive system from being destroyed due to overvoltage:
- limit the maximum speed (p1082) without any additional protection.
The maximum speed without protection is calculated from p1082 = 9590/p0316.
- use a voltage protection module (VPM) in conjunction with the function "safe standstill" (p9601, p9801).
When a fault condition exists, the VPM short-circuits the motors. During the short-circuit, the pulses must be cancelled - this means that the terminals for the safe standstill must be connected to the VPM.

p0650[0...n] Actual motor operating hours / Mot t_oper act

SERVO, VECTOR	**Can be changed:** T		**Access level:** 3
	Data type: Unsigned32	**Data set:** MDS	**Function diagram:** -
	P-Group: Motor	**Units group:** TIME_H	**Unit selection:** -
	Min	**Max**	**Factory setting**
	0 [h]	4294967295 [h]	0 [h]

Description: Displays the operating hours for the corresponding motor.
The motor operating time counter continues to run when the pulses are enabled. When the pulse enable is withdrawn, the counter is held and the value saved.

Dependency: The following prerequisites must be fulfilled in order to be able to save the operating hours counter in a non-volatile fashion:
- firmware with V2.2 or higher.
- Control Unit 320 (CU320) with hardware version C or higher (module with NVRAM).
Refer to: p0651
Refer to: A01590

Note: The value is in the unit [h] (hours).
The operating hours counter in p0650 can only be reset to 0. In this case, p0651 is automatically set to 0.
For p0651 = 0, the operating hours counter is disabled.
The operating hours counter only runs for MDS0 and MDS1 (Motor Data Set).

p0651[0...n] Motor operating hours maintenance interval / Mot t_op maint

SERVO, VECTOR	**Can be changed:** T		**Access level:** 3
	Data type: Unsigned32	**Data set:** MDS	**Function diagram:** -
	P-Group: Motor	**Units group:** TIME_H	**Unit selection:** -
	Min	**Max**	**Factory setting**
	0 [h]	99999 [h]	0 [h]

Description: Sets the service/maintenance intervals in hours for the appropriate motor.
An appropriate fault is output when the operating hourse set here are reached.

Dependency: Refer to: p0650
Refer to: A01590

© Siemens AG, 2005. All rights reserved

Note: The value is in the unit [h] (hours).
For p0651 = 0, the operating hours counter is disabled.
The operating hours counter only runs for MDS0 and MDS1 (Motor Data Set).

p0680[0...1] Central measuring probe, input terminal / Cen meas inpt

CU_S	**Can be changed:** U, T		**Access level:** 3
	Data type: Integer16	**Data set:** -	**Function diagram:** -
	P-Group: Encoder	**Units group:** -	**Unit selection:** -
	Min	**Max**	**Factory setting**
	0	6	0

Description: Sets the digital input used for the function "central measuring probe evaluation".
p0680[0]: Digital input, measuring probe 1
p0680[1]: Digital input, measuring probe 2

Values:
0: No measuring probe
1: DI/DO 9 (X122.8)
2: DI/DO 10 (X122.10)
3: DI/DO 11 (X122.11)
4: DI/DO 13 (X132.8)
5: DI/DO 14 (X132.10)
6: DI/DO 15 (X132.11)

Dependency: Refer to: p0728

Note: Prerequisite: The DI/DO must be set as input (p0728.x = 0).
DI/DO: Bidirectional Digital Input/Output

p0681 BI: Central measuring probe, synchronizing signal, signal source / Cen meas sync_sig

CU_S	**Can be changed:** T		**Access level:** 3
	Data type: Unsigned32	**Data set:** -	**Function diagram:** -
	P-Group: Commands	**Units group:** -	**Unit selection:** -
	Min	**Max**	**Factory setting**
	-	-	0

Description: Sets the signal source for the synchronizing signal (SYN) of the function "central measuring probe evaluation".
The signal is used to synchronize the common system time between the master and slave.

p0682 CI: Central measuring probe, control word signal source / Cen meas STW S_src

CU_S	**Can be changed:** T		**Access level:** 3
	Data type: Unsigned32	**Data set:** -	**Function diagram:** -
	P-Group: Displays, signals	**Units group:** -	**Unit selection:** -
	Min	**Max**	**Factory setting**
	-	-	0

Description: Sets the signal source for the control word of the function "central measuring probe evaluation".

p0684 Central measuring probe evaluation technique / Cen meas eval

CU_S	**Can be changed:** U, T		**Access level:** 3
	Data type: Integer16	**Data set:** -	**Function diagram:** -
	P-Group: Encoder	**Units group:** -	**Unit selection:** -
	Min	**Max**	**Factory setting**
	0	0	0

Description: Sets the evaluation technique for the function "central measuring probe evaluation".

Values:
0: Measurement with handshake

© Siemens AG, 2005. All rights reserved

r0685 Central measuring probe, control word display / Cen meas STW disp

CU_S

Can be changed: - **Access level:** 3

Data type: Unsigned16 **Data set:** - **Function diagram:** -

P-Group: Commands **Units group:** - **Unit selection:** -

Min	Max	Factory setting
-	-	-

Description: Displays the control word for the function "central measuring probe evaluation".

Bit field:

Bit	Signal name	0 signal	1 signal	FP
00	Falling edge, measuring probe 1	No	Yes	-
01	Falling edge, measuring probe 2	No	Yes	-
08	Rising edge, measuring probe 1	No	Yes	-
09	Rising edge, measuring probe 2	No	Yes	-

r0686[0...1] CO: Central measuring probe, measuring time rising edge / CenMeas t_meas 0/1

CU_S

Can be changed: - **Access level:** 3

Data type: Unsigned16 **Data set:** - **Function diagram:** -

P-Group: Displays, signals **Units group:** - **Unit selection:** -

Min	Max	Factory setting
-	-	-

Description: Displays the measuring time for a rising edge at the digital input for the "central measuring probe evaluation" function.

The measuring time is specified as 16-bit value with a resolution of 0.25 µs.

r0686[0]: Measuring time, rising edge measuring probe 1

r0686[1]: Measuring time, rising edge measuring probe 2

r0687[0...1] CO: Central measuring probe, measuring time falling edge / CenMeas t_meas 1/0

CU_S

Can be changed: - **Access level:** 3

Data type: Unsigned16 **Data set:** - **Function diagram:** -

P-Group: Displays, signals **Units group:** - **Unit selection:** -

Min	Max	Factory setting
-	-	-

Description: Displays the measuring time for a falling edge at the digital input for the "central measuring probe evaluation" function.

The measuring time is specified as 16-bit value with a resolution of 0.25 µs.

r0687[0]: Measuring time, falling edge measuring probe 1

r0687[1]: Measuring time, falling edge measuring probe 2

r0688 CO: Central measuring probe, status word display / Cen meas ZSW disp

CU_S

Can be changed: - **Access level:** 3

Data type: Unsigned16 **Data set:** - **Function diagram:** -

P-Group: Displays, signals **Units group:** - **Unit selection:** -

Min	Max	Factory setting
-	-	-

Description: Displays the status word for the function "central measuring probe evaluation".

Bit field:

Bit	Signal name	0 signal	1 signal	FP
00	Digital input, measuring probe 1	Low	High	-
01	Digital input, measuring probe 2	Low	High	-
08	Sub-sampling, measuring probe 1	Low	High	-
09	Sub-sampling, measuring probe 2	Low	High	-

© Siemens AG, 2005. All rights reserved

p0700[0...n] Macro binector input (BI) / Macro BI

A_INF, B_INF, SERVO, S_INF, VECTOR

Can be changed: C2(1), T		**Access level:** 1
Data type: Unsigned32	**Data set:** CDS	**Function diagram:** -
P-Group: Commands	**Units group:** -	**Unit selection:** -
Min	**Max**	**Factory setting**
0	999999	0

Description: Runs the appropriate ACX file on the CompactFlash card.
The binector inputs (BI) of the appropriate Command Data Set (CDS) are appropriately interconnected.
The selected ACX file must be located in the following directory:
... /PMACROS/<drive object>/P700/PMxxxxxx.ACX
Example:
p0700 = 6 --> the file PM000006.ACX is run.

Dependency: The ACX file to be run must be created according to the definition for ACX macros and must be saved in the directory intended on the CompactFlash card.
Refer to: p0015, p1000, p1500, r8571

Notice: No errors were issued during fast commissioning (p3900 = 1) when writing to parameters of the QUICK_IBN group!

Note: The macros in the specified directory are displayed in r8571.
Macros available as standard are described in the technical documentation of the particular product.
BI: Binector input

r0721 CU digital inputs, terminal actual value / CU DI actual value

CU_S

Can be changed: -		**Access level:** 2
Data type: Unsigned32	**Data set:** -	**Function diagram:** 1510, 2100, 2120, 2130, 2131, 2132, 2133
P-Group: Commands	**Units group:** -	**Unit selection:** -
Min	**Max**	**Factory setting**
-	-	-

Description: Displays the actual value at the digital inputs.
This means that the actual input signal can be checked at terminal DI x or DI/DO x prior to switching from the simulation mode (p0795.x = 1) to terminal mode (p0795.x = 0). The input signal at terminal DI x is displayed in bit x of r0721.

Bit field:

Bit	Signal name	0 signal	1 signal	FP
00	DI 0 (X122.1)	Low	High	-
01	DI 1 (X122.2)	Low	High	-
02	DI 2 (X122.3)	Low	High	-
03	DI 3 (X122.4)	Low	High	-
04	DI 4 (X132.1)	Low	High	-
05	DI 5 (X132.2)	Low	High	-
06	DI 6 (X132.3)	Low	High	-
07	DI 7 (X132.4)	Low	High	-
08	DI/DO 8 (X122.7)	Low	High	-
09	DI/DO 9 (X122.8)	Low	High	-
10	DI/DO 10 (X122.10)	Low	High	-
11	DI/DO 11 (X122.11)	Low	High	-
12	DI/DO 12 (X132.7)	Low	High	-
13	DI/DO 13 (X132.8)	Low	High	-
14	DI/DO 14 (X132.10)	Low	High	-
15	DI/DO 15 (X132.11)	Low	High	-

Note: If a DI/DO is parameterized as output (p0728.x = 1), then r0721.x = 0 is displayed.
DI: Digital Input
DI/DO: Bidirectional Digital Input/Output

© Siemens AG, 2005. All rights reserved

r0722 CO/BO: CU digital inputs, status / CU DI status

CU_S

Can be changed: -

Access level: 1

Data type: Unsigned32

Data set: -

Function diagram: 1510, 2100, 2120, 2130, 2131, 2132, 2133

P-Group: Commands

Units group: -

Unit selection: -

Min	Max	Factory setting
-	-	-

Description: Displays the status of the digital inputs.

Bit field:

Bit	Signal name	0 signal	1 signal	FP
00	DI 0 (X122.1)	Low	High	-
01	DI 1 (X122.2)	Low	High	-
02	DI 2 (X122.3)	Low	High	-
03	DI 3 (X122.4)	Low	High	-
04	DI 4 (X132.1)	Low	High	-
05	DI 5 (X132.2)	Low	High	-
06	DI 6 (X132.3)	Low	High	-
07	DI 7 (X132.4)	Low	High	-
08	DI/DO 8 (X122.7)	Low	High	-
09	DI/DO 9 (X122.8)	Low	High	-
10	DI/DO 10 (X122.10)	Low	High	-
11	DI/DO 11 (X122.11)	Low	High	-
12	DI/DO 12 (X132.7)	Low	High	-
13	DI/DO 13 (X132.8)	Low	High	-
14	DI/DO 14 (X132.10)	Low	High	-
15	DI/DO 15 (X132.11)	Low	High	-

Dependency: Refer to: r0723

Note: DI: Digital Input

DI/DO: Bidirectional Digital Input/Output

r0723 BO: CU digital inputs, status inverted / CU DI status inv

CU_S

Can be changed: -

Access level: 1

Data type: Unsigned32

Data set: -

Function diagram: 1510, 2100, 2120, 2130, 2131 2132, 2133

P-Group: Commands

Units group: -

Unit selection: -

Min	Max	Factory setting
-	-	-

Description: Displays the inverted status of the digital inputs.

Bit field:

Bit	Signal name	0 signal	1 signal	FP
00	DI 0 (X122.1)	Low	High	-
01	DI 1 (X122.2)	Low	High	-
02	DI 2 (X122.3)	Low	High	-
03	DI 3 (X122.4)	Low	High	-
04	DI 4 (X132.1)	Low	High	-
05	DI 5 (X132.2)	Low	High	-
06	DI 6 (X132.3)	Low	High	-
07	DI 7 (X132.4)	Low	High	-
08	DI/DO 8 (X122.7)	Low	High	-
09	DI/DO 9 (X122.8)	Low	High	-
10	DI/DO 10 (X122.10)	Low	High	-
11	DI/DO 11 (X122.11)	Low	High	-
12	DI/DO 12 (X132.7)	Low	High	-
13	DI/DO 13 (X132.8)	Low	High	-
14	DI/DO 14 (X132.10)	Low	High	-
15	DI/DO 15 (X132.11)	Low	High	-

© Siemens AG, 2005. All rights reserved

Dependency: Refer to: r0722
Note: DI: Digital Input
DI/DO: Bidirectional Digital Input/Output

p0728 CU, set input or output / CU DI or DO

CU_S

Can be changed: T		**Access level:** 1
Data type: Unsigned32	**Data set:** -	**Function diagram:** 1510, 2130, 2131, 2132, 2133
P-Group: Commands	**Units group:** -	**Unit selection:** -
Min	**Max**	**Factory setting**
0000 bin	1111 1111 1111 1111 bin	0000 bin

Description: Sets the bidirectional digital inputs/outputs as an input or output.

Bit field:

Bit	Signal name	0 signal	1 signal	FP
08	DI/DO 8 (X122.7)	Input	Output	-
09	DI/DO 9 (X122.8)	Input	Output	-
10	DI/DO 10 (X122.10)	Input	Output	-
11	DI/DO 11 (X122.11)	Input	Output	-
12	DI/DO 12 (X132.7)	Input	Output	-
13	DI/DO 13 (X132.8)	Input	Output	-
14	DI/DO 14 (X132.10)	Input	Output	-
15	DI/DO 15 (X132.11)	Input	Output	-

Note: DI/DO: Bidirectional Digital Input/Output

p0738 BI: CU, signal source for terminal DI/DO 8 / CU S_src DI/DO 8

CU_S

Can be changed: U, T		**Access level:** 1
Data type: Unsigned32	**Data set:** -	**Function diagram:** 1510, 2130
P-Group: Commands	**Units group:** -	**Unit selection:** -
Min	**Max**	**Factory setting**
-	-	0

Description: Sets the signal source for terminal DI/DO 8 (X122.7).
Note: Prerequisite: The DI/DO must be set as an output (p0728.8 = 1).
DI/DO: Bidirectional Digital Input/Output

p0739 BI: CU, signal source for terminal DI/DO 9 / CU S_src DI/DO 9

CU_S

Can be changed: U, T		**Access level:** 1
Data type: Unsigned32	**Data set:** -	**Function diagram:** 2130
P-Group: Commands	**Units group:** -	**Unit selection:** -
Min	**Max**	**Factory setting**
-	-	0

Description: Sets the signal source for terminal DI/DO 9 (X122.8).
Note: Prerequisite: The DI/DO must be set as an output (p0728.9 = 1).
DI/DO: Bidirectional Digital Input/Output

p0740 BI: CU, signal source for terminal DI/DO 10 / CU S_src DI/DO 10

CU_S

Can be changed: U, T		**Access level:** 1
Data type: Unsigned32	**Data set:** -	**Function diagram:** 2131
P-Group: Commands	**Units group:** -	**Unit selection:** -
Min	**Max**	**Factory setting**
-	-	0

Description: Sets the signal source for terminal DI/DO 10 (X122.10).

© Siemens AG, 2005. All rights reserved

Note: Prerequisite: The DI/DO must be set as output (p0728.10 = 1).
DI/DO: Bidirectional Digital Input/Output

p0741 BI: CU, signal source for terminal DI/DO 11 / CU S_src DI/DO 11

CU_S	**Can be changed:** U, T		**Access level:** 1
	Data type: Unsigned32	**Data set:** -	**Function diagram:** 1510, 2131
	P-Group: Commands	**Units group:** -	**Unit selection:** -
	Min	**Max**	**Factory setting**
	-	-	0

Description: Sets the signal source for terminal DI/DO 11 (X122.11).
Note: Prerequisite: The DI/DO must be set as an output (p0728.11 = 1).
DI/DO: Bidirectional Digital Input/Output

p0742 BI: CU, signal source for terminal DI/DO 12 / CU S_src DI/DO 12

CU_S	**Can be changed:** U, T		**Access level:** 1
	Data type: Unsigned32	**Data set:** -	**Function diagram:** 1510, 2132
	P-Group: Commands	**Units group:** -	**Unit selection:** -
	Min	**Max**	**Factory setting**
	-	-	0

Description: Sets the signal source for terminal DI/DO 12 (X132.7).
Note: Prerequisite: The DI/DO must be set as an output (p0728.12 = 1).
DI/DO: Bidirectional Digital Input/Output

p0743 BI: CU, signal source for terminal DI/DO 13 / CU S_src DI/DO 13

CU_S	**Can be changed:** U, T		**Access level:** 1
	Data type: Unsigned32	**Data set:** -	**Function diagram:** 2132
	P-Group: Commands	**Units group:** -	**Unit selection:** -
	Min	**Max**	**Factory setting**
	-	-	0

Description: Sets the signal source for terminal DI/DO 13 (X132.8).
Note: Prerequisite: The DI/DO must be set as an output (p0728.13 = 1).
DI/DO: Bidirectional Digital Input/Output

p0744 BI: CU, signal source for terminal DI/DO 14 / CU S_src DI/DO 14

CU_S	**Can be changed:** U, T		**Access level:** 1
	Data type: Unsigned32	**Data set:** -	**Function diagram:** 2133
	P-Group: Commands	**Units group:** -	**Unit selection:** -
	Min	**Max**	**Factory setting**
	-	-	0

Description: Sets the signal source for terminal DI/DO 14 (X132.10).
Note: Prerequisite: The DI/DO must be set as an output (p0728.14 = 1).
DI/DO: Bidirectional Digital Input/Output

© Siemens AG, 2005. All rights reserved

p0745 BI: CU, signal source for terminal DI/DO 15 / CU S_src DI/DO 15

CU_S	**Can be changed:** U, T		**Access level:** 1
	Data type: Unsigned32	**Data set:** -	**Function diagram:** 1510, 2133
	P-Group: Commands	**Units group:** -	**Unit selection:** -
	Min	**Max**	**Factory setting**
	-	-	0

Description: Sets the signal source for terminal DI/DO 15 (X132.11).

Note: Prerequisite: The DI/DO must be set as an output (p0728.15 = 1).
DI/DO: Bidirectional Digital Input/Output

r0747 CU, digital outputs status / CU DO status

CU_S	**Can be changed:** -		**Access level:** 1
	Data type: Unsigned32	**Data set:** -	**Function diagram:** 2130, 2131, 2132, 2133
	P-Group: Commands	**Units group:** -	**Unit selection:** -
	Min	**Max**	**Factory setting**
	-	-	-

Description: Displays the status of digital outputs.

Bit field:

Bit	Signal name	0 signal	1 signal	FP
08	DI/DO 8 (X122.7)	Low	High	-
09	DI/DO 9 (X122.8)	Low	High	-
10	DI/DO 10 (X122.10)	Low	High	-
11	DI/DO 11 (X122.11)	Low	High	-
12	DI/DO 12 (X132.7)	Low	High	-
13	DI/DO 13 (X132.8)	Low	High	-
14	DI/DO 14 (X132.10)	Low	High	-
15	DI/DO 15 (X132.11)	Low	High	-

Note: Inversion using p0748 has been taken into account.
The setting of the DI/DO as either input or output is of no significance (p0728).
DI/DO: Bidirectional Digital Input/Output

p0748 CU, invert digital outputs / CU DO invert

CU_S	**Can be changed:** U, T		**Access level:** 1
	Data type: Unsigned32	**Data set:** -	**Function diagram:** 2130, 2131, 2132, 2133
	P-Group: Commands	**Units group:** -	**Unit selection:** -
	Min	**Max**	**Factory setting**
	0000 bin	1111 1111 1111 1111 bin	0000 bin

Description: Setting to invert the signals at the digital outputs.

Bit field:

Bit	Signal name	0 signal	1 signal	FP
08	DI/DO 8 (X122.7)	Not inverted	Inverted	-
09	DI/DO 9 (X122.8)	Not inverted	Inverted	-
10	DI/DO 10 (X122.10)	Not inverted	Inverted	-
11	DI/DO 11 (X122.11)	Not inverted	Inverted	-
12	DI/DO 12 (X132.7)	Not inverted	Inverted	-
13	DI/DO 13 (X132.8)	Not inverted	Inverted	-
14	DI/DO 14 (X132.10)	Not inverted	Inverted	-
15	DI/DO 15 (X132.11)	Not inverted	Inverted	-

Note: DI/DO: Bidirectional Digital Input/Output

© Siemens AG, 2005. All rights reserved

p0771[0...2] CI: Test sockets signal source / TestSktsSigSrce

CU_S	**Can be changed:** U, T		**Access level:** 2
	Data type: Unsigned32	**Data set:** -	**Function diagram:** 8134
	P-Group: Terminals	**Units group:** -	**Unit selection:** -
	Min	**Max**	**Factory setting**
	-	-	0

Description: Sets the signal source for the signal to be output at the test sockets.

Index: [0] = T0
[1] = T1
[2] = T2

Dependency: Can only be set when p0776 = 99.
Refer to: r0772, r0774, p0776, p0777, p0778, p0779, p0780, p0783, p0784, r0786

r0772[0...2] Test sockets output signal / TestSktsSignalVal

CU_S	**Can be changed:** -		**Access level:** 2
	Data type: Floating Point	**Data set:** -	**Function diagram:** 8134
	P-Group: Terminals	**Units group:** PERCENT	**Unit selection:** -
	Min	**Max**	**Factory setting**
	- [%]	- [%]	- [%]

Description: Displays the actual value of the signal to be output.

Index: [0] = T0
[1] = T1
[2] = T2

Dependency: Refer to: p0771, r0772, r0774, p0776, p0777, p0778, p0779, p0780, p0783, p0784, r0786

r0774[0...2] Test sockets output voltage / TestSkts U_output

CU_S	**Can be changed:** -		**Access level:** 2
	Data type: Floating Point	**Data set:** -	**Function diagram:** 8134
	P-Group: Terminals	**Units group:** VOLTAGE_DC	**Unit selection:** -
	Min	**Max**	**Factory setting**
	- [V]	- [V]	- [V]

Description: Displays the actual output voltage for the test sockets.

Index: [0] = T0
[1] = T1
[2] = T2

Dependency: Refer to: p0771, r0772, p0776, p0777, p0778, p0779, p0780, p0783, p0784, r0786

p0776[0...2] Test socket mode / Test skt mode

CU_S	**Can be changed:** U, T		**Access level:** 4
	Data type: Integer16	**Data set:** -	**Function diagram:** 8134
	P-Group: Terminals	**Units group:** -	**Unit selection:** -
	Min	**Max**	**Factory setting**
	96	99	99

Description: Sets the mode for the test sockets.

Values:
96: Physical address (32-bit integer signal, unsigned)
97: Physical address (32-bit integer signal)
98: Physical address (32-bit floating-point signal)
99: BICO signal

Index: [0] = T0
[1] = T1
[2] = T2

Dependency: Refer to: p0771, r0772, r0774, p0777, p0778, p0779, p0780, p0783, p0784, r0786, p0788, p0789, r0790

© Siemens AG, 2005. All rights reserved

p0777[0...2] Test socket characteristic value x1 / Test skt char x1

CU_S	**Can be changed:** U, T		**Access level:** 2
	Data type: Floating Point	**Data set:** -	**Function diagram:** 8134
	P-Group: Terminals	**Units group:** PERCENT	**Unit selection:** -
	Min	**Max**	**Factory setting**
	-100000.00 [%]	100000.00 [%]	0.00 [%]

Description: The normalization characteristic for the test sockets is defined using two points. This parameter specifies the x coordinate (percentage) of the first point on the characteristic.

Index: [0] = T0
[1] = T1
[2] = T2

Dependency: Can only be set when p0776 = 99.
Refer to: p0778, p0779, p0780, r0786

Note: The value 0.00 % corresponds to 2.49 V.

p0778[0...2] Test socket characteristic value y1 / Test skt char y1

CU_S	**Can be changed:** U, T		**Access level:** 2
	Data type: Floating Point	**Data set:** -	**Function diagram:** 8134
	P-Group: Terminals	**Units group:** VOLTAGE_DC	**Unit selection:** -
	Min	**Max**	**Factory setting**
	0.00 [V]	4.98 [V]	2.49 [V]

Description: The normalization characteristic for the test sockets is defined using two points. This parameter specifies the y coordinate (output voltage) of the first point on the characteristic.

Index: [0] = T0
[1] = T1
[2] = T2

Dependency: Can only be set when p0776 = 99.
Refer to: p0777, p0779, p0780, r0786

p0779[0...2] Test socket characteristic value x2 / Test skt char x2

CU_S	**Can be changed:** U, T		**Access level:** 2
	Data type: Floating Point	**Data set:** -	**Function diagram:** 8134
	P-Group: Terminals	**Units group:** PERCENT	**Unit selection:** -
	Min	**Max**	**Factory setting**
	-100000.00 [%]	100000.00 [%]	100.00 [%]

Description: The normalization characteristic for the test sockets is defined using two points. This parameter specifies the x coordinate (percentage) of the second point on the characteristic.

Index: [0] = T0
[1] = T1
[2] = T2

Dependency: Can only be set when p0776 = 99.
Refer to: p0777, p0778, p0780, r0786

Note: The value 100.00 % corresponds to 4.98 V.

© Siemens AG, 2005. All rights reserved

p0780[0...2] Test socket characteristic value y2 / Test skt char y2

CU_S	**Can be changed:** U, T		**Access level:** 2
	Data type: Floating Point	**Data set:** -	**Function diagram:** 8134
	P-Group: Terminals	**Units group:** VOLTAGE_DC	**Unit selection:** -
	Min	**Max**	**Factory setting**
	0.00 [V]	4.98 [V]	4.98 [V]

Description: The normalization characteristic for the test sockets is defined using two points. This parameter specifies the y coordinate (output voltage) of the second point on the characteristic.

Index: [0] = T0
[1] = T1
[2] = T2

Dependency: Can only be set when p0776 = 99.
Refer to: p0777, p0778, p0779, r0786

p0783[0...2] Test sockets offset / Test skt offset

CU_S	**Can be changed:** U, T		**Access level:** 2
	Data type: Floating Point	**Data set:** -	**Function diagram:** 8134
	P-Group: Terminals	**Units group:** VOLTAGE_DC	**Unit selection:** -
	Min	**Max**	**Factory setting**
	-4.98 [V]	4.98 [V]	0.00 [V]

Description: Sets an additional offset for the test sockets.

Index: [0] = T0
[1] = T1
[2] = T2

p0784[0...2] Test socket limit on/off / TestSktLim on/off

CU_S	**Can be changed:** U, T		**Access level:** 2
	Data type: Integer16	**Data set:** -	**Function diagram:** 8134
	P-Group: Terminals	**Units group:** -	**Unit selection:** -
	Min	**Max**	**Factory setting**
	0	1	0

Description: Sets the limit for a signal to be output via test sockets.

Values: 0: Limiting off
1: Limiting on

Index: [0] = T0
[1] = T1
[2] = T2

Note: Limiting on:
If signals are output outside the permissible measuring range, the signal is limited to 4.98 V or to V.
Limiting off:
If signals are output outside the permissible measuring range, this causes signal overflow. In the case of signal overflow, the signal jumps from 0 V to 4.98 V or from 4.98 V to 0 V.

r0786[0...2] Test socket normalization per volt / TestSktNorm/Volt

CU_S	**Can be changed:** -		**Access level:** 2
	Data type: Floating Point	**Data set:** -	**Function diagram:** 8134
	P-Group: Terminals	**Units group:** -	**Unit selection:** -
	Min	**Max**	**Factory setting**
	-	-	-

Description: Displays the normalization of the signal to be output. A change in the output voltage by 1 volt corresponds to the value in this parameter. The units are determined by the interconnected test signal.

© Siemens AG, 2005. All rights reserved

Index: [0] = T0
[1] = T1
[2] = T2
Dependency: Refer to: p0771, r0772, r0774, p0777, p0778, p0779, p0780, p0783, p0784
Note: Example:
r0786[0] = 1500.0 and the measuring signal is r0063 (CO: Smoothed speed actual value [RPM]).
A change of 1 V at the output of test socket T0 corresponds to 1500.0 [RPM].

p0788[0...2] Test sockets physical address / Test skt PhyAddr

CU_S	**Can be changed:** U, T		**Access level:** 4
	Data type: Unsigned32	**Data set:** -	**Function diagram:** -
	P-Group: Terminals	**Units group:** -	**Unit selection:** -
	Min	**Max**	**Factory setting**
	0000 hex	FFFF FFFF hex	0000 hex

Description: Sets the physical address to output signals via the test sockets.
Index: [0] = T0
[1] = T1
[2] = T2
Dependency: Changes only become effective if p0776 does not equal 99.
Refer to: p0789, r0790

p0789[0...2] Test sockets physical address gain / TestSktPhyAddrGain

CU_S	**Can be changed:** U, T		**Access level:** 4
	Data type: Floating Point	**Data set:** -	**Function diagram:** -
	P-Group: Terminals	**Units group:** -	**Unit selection:** -
	Min	**Max**	**Factory setting**
	-340.28235E36	340.28235E36	1.00000

Description: Sets the gain of a signal output of a physical address via test sockets.
Index: [0] = T0
[1] = T1
[2] = T2
Dependency: Changes only become effective if p0776 does not equal 99.
Refer to: p0788

r0790[0...2] Test sockets physical address signal value / TestSktsPhyAddrVal

CU_S	**Can be changed:** -		**Access level:** 4
	Data type: Unsigned32	**Data set:** -	**Function diagram:** -
	P-Group: Terminals	**Units group:** -	**Unit selection:** -
	Min	**Max**	**Factory setting**
	-	-	-

Description: Displays the actual value of a signal determined via a physical address.
Index: [0] = T0
[1] = T1
[2] = T2
Dependency: Only effective when p0776 = 97 or p0776 = 96.
Refer to: p0788

© Siemens AG, 2005. All rights reserved

p0795 CU digital inputs simulation mode / CU DI simulation

CU_S

Can be changed: U, T | **Access level:** 2

Data type: Unsigned32 | **Data set:** - | **Function diagram:** 1510, 2100, 2120, 2130, 2131, 2132, 2133

P-Group: Commands | **Units group:** - | **Unit selection:** -

Min	Max	Factory setting
0000 bin	1111 1111 1111 1111 bin	0000 bin

Description: Sets the simulation mode for digital inputs.

Bit field:

Bit	Signal name	0 signal	1 signal	FP
00	DI 0 (X122.1)	Terminal eval.	Simulation	-
01	DI 1 (X122.2)	Terminal eval.	Simulation	-
02	DI 2 (X122.3)	Terminal eval.	Simulation	-
03	DI 3 (X122.4)	Terminal eval.	Simulation	-
04	DI 4 (X132.1)	Terminal eval.	Simulation	-
05	DI 5 (X132.2)	Terminal eval.	Simulation	-
06	DI 6 (X132.3)	Terminal eval.	Simulation	-
07	DI 7 (X132.4)	Terminal eval.	Simulation	-
08	DI/DO 8 (X122.7)	Terminal eval.	Simulation	-
09	DI/DO 9 (X122.8)	Terminal eval.	Simulation	-
10	DI/DO 10 (X122.10)	Terminal eval.	Simulation	-
11	DI/DO 11 (X122.11)	Terminal eval.	Simulation	-
12	DI/DO 12 (X132.7)	Terminal eval.	Simulation	-
13	DI/DO 13 (X132.8)	Terminal eval.	Simulation	-
14	DI/DO 14 (X132.10)	Terminal eval.	Simulation	-
15	DI/DO 15 (X132.11)	Terminal eval.	Simulation	-

Dependency: The setpoint for the input signals is specified using p0796.
Refer to: p0796, p9620

Notice: It is not permissible to select the simulation of a digital input using the Safety SH (p9620) and this is rejected.

Note: DI: Digital Input
DI/DO: Bidirectional Digital Input/Output
This parameter is not saved when data is backed-up (p0971, p0977).

p0796 CU digital inputs simulation mode setpoint / CU DI simul setpt

CU_S

Can be changed: U, T | **Access level:** 2

Data type: Unsigned32 | **Data set:** - | **Function diagram:** 1510, 2100, 2120, 2130, 2131, 2132, 2133

P-Group: Commands | **Units group:** - | **Unit selection:** -

Min	Max	Factory setting
0000 bin	1111 1111 1111 1111 bin	0000 bin

Description: Sets the setpoint for the input signals in the digital input simulation mode.

© Siemens AG, 2005. All rights reserved

Bit field:	Bit	Signal name	0 signal	1 signal	FP
	00	DI 0 (X122.1)	Low	High	-
	01	DI 1 (X122.2)	Low	High	-
	02	DI 2 (X122.3)	Low	High	-
	03	DI 3 (X122.4)	Low	High	-
	04	DI 4 (X132.1)	Low	High	-
	05	DI 5 (X132.2)	Low	High	-
	06	DI 6 (X132.3)	Low	High	-
	07	DI 7 (X132.4)	Low	High	-
	08	DI/DO 8 (X122.7)	Low	High	-
	09	DI/DO 9 (X122.8)	Low	High	-
	10	DI/DO 10 (X122.10)	Low	High	-
	11	DI/DO 11 (X122.11)	Low	High	-
	12	DI/DO 12 (X132.7)	Low	High	-
	13	DI/DO 13 (X132.8)	Low	High	-
	14	DI/DO 14 (X132.10)	Low	High	-
	15	DI/DO 15 (X132.11)	Low	High	-

Dependency: The simulation of a digital input is selected using p0795.
Refer to: p0795

Note: DI: Digital Input
DI/DO: Bidirectional Digital Input/Output
This parameter is not saved when data is backed-up (p0971, p0977).

p0799 CU inputs/outputs, sampling time / CU I/O t_sampl

CU_S

Can be changed: C1(3)		**Access level:** 3
Data type: Floating Point	**Data set:** -	**Function diagram:** 2100, 2120, 2130, 2131, 2132, 2133
P-Group: Commands	**Units group:** TIME_M6	**Unit selection:** -
Min	**Max**	**Factory setting**
0.00 [µs]	5000.00 [µs]	4000.00 [µs]

Description: Sets the sampling time for the inputs and outputs.

Dependency: The parameter can only be modified for p0009 = 3, 29.
The sampling times can only be set as an integer multiple of the basic sampling time (p0110, p0111).
Refer to: p0009, p0110, p0111

Note: The modified sampling time is not effective until the drive unit is powered-up again.

p0806 BI: Inhibit master control / PcCtrl inhibit

A_INF, B_INF, SERVO, S_INF, VECTOR

Can be changed: T		**Access level:** 3
Data type: Unsigned32	**Data set:** -	**Function diagram:** -
P-Group: Commands	**Units group:** -	**Unit selection:** -
Min	**Max**	**Factory setting**
-	-	0

Description: Sets the signal source to block the master control.

Dependency: Refer to: r0807

Note: The master control is used from the commissioning software (drive control panel) and from the Advanced Operator Panel (AOP, LOCAL mode).

© Siemens AG, 2005. All rights reserved

r0807 BO: Master control active / PcCtrl active

A_INF, B_INF, SERVO, S_INF, VECTOR

Can be changed: -		**Access level:** 2
Data type: Unsigned8	**Data set:** -	**Function diagram:** -
P-Group: Displays, signals	**Units group:** -	**Unit selection:** -
Min	**Max**	**Factory setting**
-	-	-

Description: Displays what has the master control.
The drive can be controlled via the BICO interconnection or from external (e.g. the commissioning software).

Bit field:

Bit	Signal name	0 signal	1 signal	FP
00	Master control active	No	Yes	5030

Dependency: Refer to: p0806

Note: Bit 0 = 0: BICO interconnection active
Bit 0 = 1: Master control for PC/AOP
The master control is used from the commissioning software (drive control panel) and from the Advanced Operator Panel (AOP, LOCAL mode).

p0809[0...2] Copy Command Data Set CDS / Copy CDS

A_INF, B_INF, SERVO, S_INF, TM41, VECTOR

Can be changed: T		**Access level:** 2
Data type: Unsigned8	**Data set:** -	**Function diagram:** 8560
P-Group: Commands	**Units group:** -	**Unit selection:** -
Min	**Max**	**Factory setting**
0	15	0

Description: Copies one Command Data Set (CDS) into another.

Index: [0] = Source Command Data Set
[1] = Target command data set
[2] = Start copying

Note: Procedure:
1. In Index 0, enter which command data set should be copied.
2. In Index 1, enter the command data set that is to be copied into.
3. Start copying: Set index 2 from 0 to 1.
p0809[2] is automatically set to 0 when copying is completed.

p0810 BI: Command Data Set selection CDS bit 0 / CDS select., bit 0

A_INF, B_INF, S_INF, TM41, VECTOR

Can be changed: T		**Access level:** 3
Data type: Unsigned32	**Data set:** -	**Function diagram:** 8560
P-Group: Commands	**Units group:** -	**Unit selection:** -
Min	**Max**	**Factory setting**
-	-	0

Description: Sets the signal source to select the Command Data Set bit 0 (CDS bit 0).

Dependency: Refer to: r0050, p0811, p0812, p0813, r0836

Note: Command data sets are selected using the binector inputs p0810, p0811, p0812 and p0813.
For a command data set, selected using the binector inputs, is displayed in r0836.
The currently effective command data set is displayed in r0050.
A command data set can be copied using p0809.

© Siemens AG, 2005. All rights reserved

p0811 BI: Command data set selection CDS bit 1 / CDS select., bit 1

A_INF, B_INF, S_INF, TM41, VECTOR

Can be changed: T		**Access level:** 3
Data type: Unsigned32	**Data set:** -	**Function diagram:** 8560
P-Group: Commands	**Units group:** -	**Unit selection:** -
Min	**Max**	**Factory setting**
-	-	0

Description: Sets the signal source to select the Command Data Set bit 1 (CDS bit 1).
Dependency: Refer to: r0050, p0810, p0812, p0813, r0836
Note: Command data sets are selected using the binector inputs p0810, p0811, p0812 and p0813.
For a command data set, selected using the binector inputs, is displayed in r0836.
The currently effective command data set is displayed in r0050.
A command data set can be copied using p0809.

p0812 BI: Command data set selection CDS bit 2 / CDS select., bit 2

A_INF, B_INF, S_INF, TM41, VECTOR

Can be changed: T		**Access level:** 3
Data type: Unsigned32	**Data set:** -	**Function diagram:** 8560
P-Group: Commands	**Units group:** -	**Unit selection:** -
Min	**Max**	**Factory setting**
-	-	0

Description: Sets the signal source to select the Command Data Set bit 2 (CDS bit 2).
Dependency: Refer to: r0050, p0810, p0811, p0813, r0836
Note: Command data sets are selected using the binector inputs p0810, p0811, p0812 and p0813.
For a command data set, selected using the binector inputs, is displayed in r0836.
The currently effective command data set is displayed in r0050.
A command data set can be copied using p0809.

p0813 BI: Command data set selection CDS bit 3 / CDS select., bit 3

A_INF, B_INF, S_INF, TM41, VECTOR

Can be changed: T		**Access level:** 3
Data type: Unsigned32	**Data set:** -	**Function diagram:** 8560
P-Group: Commands	**Units group:** -	**Unit selection:** -
Min	**Max**	**Factory setting**
-	-	0

Description: Sets the signal source to select the Command Data Set bit 3 (CDS bit 3).
Dependency: Refer to: r0050, p0810, p0811, p0812, r0836
Note: Command data sets are selected using the binector inputs p0810, p0811, p0812 and p0813.
For a command data set, selected using the binector inputs, is displayed in r0836.
The currently effective command data set is displayed in r0050.
A command data set can be copied using p0809.

p0819[0...2] Copy Drive Data Set DDS / Copy DDS

SERVO, TM41, VECTOR

Can be changed: C2(15)		**Access level:** 2
Data type: Unsigned8	**Data set:** -	**Function diagram:** 8565
P-Group: Data sets	**Units group:** -	**Unit selection:** -
Min	**Max**	**Factory setting**
0	31	[0] 0 [1] 0 [2] 0

Description: Copies a Drive Data Set (DDS) into another.

© Siemens AG, 2005. All rights reserved

Index: [0] = Source drive data set
[1] = Target drive data set
[2] = Start copying

Note: Procedure:
1. In Index 0, enter which drive data set is to be copied.
2. In Index 1, enter the drive data set data that is to be copied into.
3. Start copying: Set index 2 from 0 to 1.
p0819[2] is automatically set to 0 when copying is completed.

p0820[0...n] BI: Drive data set selection DDS bit 0 / DDS select., bit 0

SERVO, TM41, VECTOR

Can be changed: C2(15), T		**Access level:** 3
Data type: Unsigned32	**Data set:** CDS	**Function diagram:** 8565
P-Group: Data sets	**Units group:** -	**Unit selection:** -
Min	**Max**	**Factory setting**
-	-	0

Description: Sets the signal source to select the Drive Data Set, bit 0 (DDS, bit 0).
Dependency: Refer to: r0051, r0837

p0821[0...n] BI: Drive data set selection DDS bit 1 / DDS select., bit 1

SERVO, TM41, VECTOR

Can be changed: C2(15), T		**Access level:** 3
Data type: Unsigned32	**Data set:** CDS	**Function diagram:** 8565
P-Group: Data sets	**Units group:** -	**Unit selection:** -
Min	**Max**	**Factory setting**
-	-	0

Description: Sets the signal source to select the Drive Data Set, bit 1 (DDS, bit 1).
Dependency: Refer to: r0051, r0837

p0822[0...n] BI: Drive data set selection DDS bit 2 / DDS select., bit 2

SERVO, TM41, VECTOR

Can be changed: C2(15), T		**Access level:** 3
Data type: Unsigned32	**Data set:** CDS	**Function diagram:** 8565
P-Group: Data sets	**Units group:** -	**Unit selection:** -
Min	**Max**	**Factory setting**
-	-	0

Description: Sets the signal source to select the Drive Data Set, bit 2 (DDS, bit 2).
Dependency: Refer to: r0051, r0837

p0823[0...n] BI: Drive data set selection DDS bit 3 / DDS select., bit 3

SERVO, TM41, VECTOR

Can be changed: C2(15), T		**Access level:** 3
Data type: Unsigned32	**Data set:** CDS	**Function diagram:** 8565
P-Group: Data sets	**Units group:** -	**Unit selection:** -
Min	**Max**	**Factory setting**
-	-	0

Description: Sets the signal source to select the Drive Data Set, bit 3 (DDS, bit 3).
Dependency: Refer to: r0051, r0837

© Siemens AG, 2005. All rights reserved

p0824[0...n] BI: Drive data set selection DDS bit 4 / DDS select., bit 4

SERVO, TM41, VECTOR	**Can be changed:** C2(15), T		**Access level:** 3
	Data type: Unsigned32	**Data set:** CDS	**Function diagram:** 8565
	P-Group: Data sets	**Units group:** -	**Unit selection:** -
	Min	**Max**	**Factory setting**
	-	-	0

Description: Sets the signal source to select the Drive Data Set, bit 4 (DDS, bit 4).
Dependency: Refer to: r0051, r0837

p0826[0...n] Motor changeover, motor number / Mot_chng mot No.

SERVO, VECTOR	**Can be changed:** C2(1, 3), U		**Access level:** 2
	Data type: Unsigned16	**Data set:** MDS	**Function diagram:** 8575
	P-Group: Motor	**Units group:** -	**Unit selection:** -
	Min	**Max**	**Factory setting**
	0	15	0

Description: Sets the freely-assignable motor number for the motor changeover.
Note: When the motor data sets are changed-over, the following applies:
The same motor number signifies the same thermal model.

p0827[0...n] Motor changeover status word bit number / Mot_chg ZSW bitNo.

SERVO, VECTOR	**Can be changed:** C2(3), U		**Access level:** 2
	Data type: Unsigned16	**Data set:** MDS	**Function diagram:** 8575
	P-Group: Motor	**Units group:** -	**Unit selection:** -
	Min	**Max**	**Factory setting**
	0	15	0

Description: Sets the bit number for every motor data set.
Example:
p0827[0] = 0: For MDS0, r0830.0 is switched.
p0827[1] = 5: For MDS1, r0830.5 is switched.
Dependency: Refer to: r0830
Note: A motor is only changed over (a new motor selected) after the pulses have been cancelled.
When the motor data sets are changed-over, the following applies:
Bit numbers that are not identical, signify that the motor must be changed over.

p0828[0...n] BI: Motor changeover, feedback signal / Mot_chng fdbk sig

SERVO, VECTOR	**Can be changed:** C2(15), T		**Access level:** 3
	Data type: Unsigned32	**Data set:** CDS	**Function diagram:** 8575
	P-Group: Data sets	**Units group:** -	**Unit selection:** -
	Min	**Max**	**Factory setting**
	-	-	0

Description: Sets the signal source for the feedback signal when changing over the motor.
For p0833.0 = 1 the following applies:
This feedback signal (0/1 edge) is required after a motor changeover to enable the pulses.
Dependency: Refer to: p0833

© Siemens AG, 2005. All rights reserved

r0830 CO/BO: Motor changeover, status word / Mot_chngov ZSW

SERVO, VECTOR

Can be changed: -
Access level: 2
Data type: Unsigned16
Data set: -
Function diagram: 8575
P-Group: Displays, signals
Units group: -
Unit selection: -

Min	Max	Factory setting
-	-	-

Description: Displays the status word of the motor changeover.
These signals can be connected to digital outputs to change over the motor.

Bit field:

Bit	Signal name	0 signal	1 signal	FP
00	Motor selection, bit 0	Low	High	-
01	Motor selection, bit 1	Low	High	-
02	Motor selection, bit 2	Low	High	-
03	Motor selection, bit 3	Low	High	-
04	Motor selection, bit 4	Low	High	-
05	Motor selection, bit 5	Low	High	-
06	Motor selection, bit 6	Low	High	-
07	Motor selection, bit 7	Low	High	-
08	Motor selection, bit 8	Low	High	-
09	Motor selection, bit 9	Low	High	-
10	Motor selection, bit 10	Low	High	-
11	Motor selection, bit 11	Low	High	-
12	Motor selection, bit 12	Low	High	-
13	Motor selection, bit 13	Low	High	-
14	Motor selection, bit 14	Low	High	-
15	Motor selection, bit 15	Low	High	-

Dependency: Refer to: p0827

p0831[0...15] BI: Motor changeover, contactor feedback / Mot_chg cont fdbk

SERVO, VECTOR

Can be changed: U, T
Access level: 3
Data type: Unsigned32
Data set: -
Function diagram: 8575
P-Group: Communications
Units group: -
Unit selection: -

Min	Max	Factory setting
-	-	0

Description: Sets the signal source for the feedback signal of the contactors when changing over motors.
There is a fixed inter-relationship between energizing the contactor and the feedback signal.
Example:
A changeover is to be made between MDS0 (motor 0) and MDS1 (motor 1). The contactors should be switched using bit 4 (contactor 0) and 5 (contactor 1). The changeover should be made with an interconnection of the feedback signal.
Implementation:
MDS0: p0827[0] = 4, interconnect output to switch contactor 0 to r0830.4, p0831[4] = "input, feedback signal, contactor 0"
MDS1: p0827[1] = 5, interconnect output to switch contactor 1 to r0830.5, p0831[5] = "input, feedback signal, contactor 1"
The following sequence applies when changing over from MDS0 to MDS1:
1. The status bit p0830.4 is deleted. When the feedback signal (p0831[4]) is connected, the system waits until the feedback signal "contactor open" is displayed. If the feedback signal is not connected, then the system waits for the switch-off interlocking time of 320 ms.
2. The status bit p0830.5 is set. If the feedback signal (p0831[5]) is connected, the system waits until the feedback signal "contactor closed" is displayed. If the feedback signal is not connected, then the system waits for the switch-on interlocking time of 160 ms.

© Siemens AG, 2005. All rights reserved

Index:
[0] = Feedback signal, contactor 0
[1] = Feedback signal, contactor 1
[2] = Feedback signal, contactor 2
[3] = Feedback signal, contactor 3
[4] = Feedback signal, contactor 4
[5] = Feedback signal, contactor 5
[6] = Feedback signal, contactor 6
[7] = Feedback signal, contactor 7
[8] = Feedback signal, contactor 8
[9] = Feedback signal, contactor 9
[10] = Feedback signal, contactor 10
[11] = Feedback signal, contactor 11
[12] = Feedback signal, contactor 12
[13] = Feedback signal, contactor 13
[14] = Feedback signal, contactor 14
[15] = Feedback signal, contactor 15

r0832 CO/BO: Mot. changeover, contactor feedback sig. status word / Mot_chng fdbk ZSW

SERVO, VECTOR

Can be changed: -
Access level: 2
Data type: Unsigned32
Data set: -
Function diagram: 8575
P-Group: Displays, signals
Units group: -
Unit selection: -

Min	Max	Factory setting
-	-	-

Description: Displays the status word of the contactor feedback signals when changing over a motor.

Bit field:

Bit	Signal name	0 signal	1 signal	FP
00	Feedback signal, contactor 0	Opened	Closed	-
01	Feedback signal, contactor 1	Opened	Closed	-
02	Feedback signal, contactor 2	Opened	Closed	-
03	Feedback signal, contactor 3	Opened	Closed	-
04	Feedback signal, contactor 4	Opened	Closed	-
05	Feedback signal, contactor 5	Opened	Closed	-
06	Feedback signal, contactor 6	Opened	Closed	-
07	Feedback signal, contactor 7	Opened	Closed	-
08	Feedback signal, contactor 8	Opened	Closed	-
09	Feedback signal, contactor 9	Opened	Closed	-
10	Feedback signal, contactor 10	Opened	Closed	-
11	Feedback signal, contactor 11	Opened	Closed	-
12	Feedback signal, contactor 12	Opened	Closed	-
13	Feedback signal, contactor 13	Opened	Closed	-
14	Feedback signal, contactor 14	Opened	Closed	-
15	Feedback signal, contactor 15	Opened	Closed	-

Dependency: Refer to: p0831

p0833 Motor changeover, configuration / Mot_chngov config

SERVO, VECTOR

Can be changed: C2(3), U
Access level: 2
Data type: Unsigned16
Data set: -
Function diagram: 8575
P-Group: Motor
Units group: -
Unit selection: -

Min	Max	Factory setting
0	3	0

Description: Sets the configuration for the motor changeover.

Bit field:

Bit	Signal name	0 signal	1 signal	FP
00	Contactor changeover from the application/drive	Drive	application	-
01	Pulse cancellation by application/drive	Drive	application	-

Note: For VECTOR, the following applies:
The "flying restart" function should be activated (p1200) when changing-over to a motor that is already running.

© Siemens AG, 2005. All rights reserved

r0835 CO/BO: Motor data set changeover status word / MDS_chngov ZSW

SERVO, VECTOR

Can be changed: -
Access level: 2
Data type: Unsigned16
Data set: -
Function diagram: 8575
P-Group: Displays, signals
Units group: -
Unit selection: -

Min	Max	Factory setting
-	-	-

Description: Displays the status word for the motor data set changeover.

Bit field:

Bit	Signal name	0 signal	1 signal	FP
00	Motor data set changeover active	Not active	active	8575

r0836 CO/BO: Command Data Set CDS selected / CDS selected

A_INF, B_INF, SERVO, S_INF, TM41, VECTOR

Can be changed: -
Access level: 2
Data type: Unsigned8
Data set: -
Function diagram: 1530, 8560
P-Group: Displays, signals
Units group: -
Unit selection: -

Min	Max	Factory setting
-	-	-

Description: Displays the Command Data Set (CDS) selected using p0810 ... p0813.

Bit field:

Bit	Signal name	0 signal	1 signal	FP
00	CDS select. bit 0	Off	On	-
01	CDS select. bit 1	Off	On	-
02	CDS select. bit 2	Off	On	-
03	CDS select. bit 3	Off	On	-

Dependency: Refer to: r0050, p0810, p0811, p0812, p0813

Note: The currently effective command data set is displayed in r0050.

r0837 CO/BO: Drive Data Set DDS selected / DDS selected

SERVO, TM41, VECTOR

Can be changed: -
Access level: 2
Data type: Unsigned8
Data set: -
Function diagram: 8565
P-Group: Displays, signals
Units group: -
Unit selection: -

Min	Max	Factory setting
-	-	-

Description: Displays the Drive Data Set (DDS) selected using p0820 ... p0824.

Bit field:

Bit	Signal name	0 signal	1 signal	FP
00	DDS select. bit 0	Off	On	-
01	DDS select. bit 1	Off	On	-
02	DDS select. bit 2	Off	On	-
03	DDS select. bit 3	Off	On	-
04	DDS select. bit 4	Off	On	-

Dependency: Refer to: r0051, p0820, p0821, p0822, p0823, p0824

r0838[0...3] Motor/encoder data set selected / MDS/EDS selected

SERVO, VECTOR

Can be changed: -
Access level: 2
Data type: Unsigned8
Data set: -
Function diagram: 8565
P-Group: Displays, signals
Units group: -
Unit selection: -

Min	Max	Factory setting
-	-	-

Description: Displays the selected Motor Data Set (MDS) and the selected Encoder Data Sets (EDS).

© Siemens AG, 2005. All rights reserved

Index: [0] = Motor Data Set MDS selected
[1] = Encoder 1 Encoder Data Set EDS selected
[2] = Encoder 2 Encoder Data Set EDS selected
[3] = Encoder 3 Encoder Data Set EDS selected

Dependency: Refer to: r0049, p0186, p0187, p0188, p0189

Note: Value 99 means: No encoder assigned (not configured).

p0840[0...n] BI: ON/OFF1 / ON/OFF1

A_INF, B_INF, SERVO, S_INF, VECTOR

Can be changed: T		**Access level:** 3
Data type: Unsigned32	**Data set:** CDS	**Function diagram:** 2501, 8720, 8920
P-Group: Commands	**Units group:** -	**Unit selection:** -
Min	**Max**	**Factory setting**
-	-	0

Description: Sets the signal source for control word 1 bit 0 (ON/OFF1).

Recommendation: When the signal source is set, this does not trigger a response - but only a signal change of the source.

Note: For drives with closed-loop speed control (p1300 = 20, 21), the following applies:
Bit 0 = 0: OFF1 (braking with the ramp-function generator, then pulse cancellation and power-on inhibit)
For drives with closed-loop torque control (p1300 = 22, 23), the following applies:
Bit 0 = 0: Immediate pulse cancellation
For drives with closed-loop torque control (activated using p1501), the following applies:
Bit 0 = 0: No dedicated braking response, but pulse cancellation when standstill is detected (p1226, p1227)
For drives with closed-loop speed/torque control, the following applies:
Bit 0 = 0/1: ON (pulses can be enabled)
For active infeeds (Active Line Module and Smart Line Module) the following applies:
Bit 0 = 0: OFF1 (reduce Vdc along the ramp, then pulse cancellation and pre-charging contactor/line contactor open)
Bit 0 = 0/1: ON (pre-charging contactor/line contactor closed, pulses can be enabled)
For passive infeed units (Basic Line Module) the following applies:
Bit 0 = 0: OFF1 (pre-charging contactor/line contactor open)
Bit 0 = 0/1: ON (pre-charging contactor/line contactor closed)
r0863.1 of a drive can also be selected as signal source.

p0840 BI: ON/OFF1 / ON/OFF1

TM41

Can be changed: T		**Access level:** 3
Data type: Unsigned32	**Data set:** -	**Function diagram:** -
P-Group: Commands	**Units group:** -	**Unit selection:** -
Min	**Max**	**Factory setting**
-	-	0

Description: Sets the signal source for control word 1 bit 0 (ON/OFF1).

Note: Bit 0 = 0: OFF1 (pulse cancellation and power-on inhibit)
Bit 0 = 0/1: ON (pulses can be enabled)

© Siemens AG, 2005. All rights reserved

p0844[0...n] BI: 1. OFF2 / 1. OFF2

A_INF, B_INF, SERVO, S_INF, VECTOR	**Can be changed:** T		**Access level:** 3
	Data type: Unsigned32	**Data set:** CDS	**Function diagram:** 2501, 8720, 8920
	P-Group: Commands	**Units group:** -	**Unit selection:** -
	Min	**Max**	**Factory setting**
	-	-	1

Description: Sets the signal source for the 1st OC/OFF2.
The AND logic operation of the 1st OC/OFF2 and 2nd OC/OFF2 results in control word 1, bit 1 (OC/OFF2).

Note: For drives, the following applies:
Bit 1 = 0: OFF2 (immediate pulse cancellation and power-on inhibit)
Bit 1 = 1: No OFF2 (enable is possible)
For infeed units, the following applies:
Bit 1 = 0: OFF2 (immediate pulse cancellation for active infeed modules and Smart Line Modules, pre-charging contactor/line contactor open and power-on inhibit)
Bit 1 = 1: No OFF2 (enable is possible)
OC: Operating condition

p0844 BI: OFF2 / OFF2

TM41	**Can be changed:** T		**Access level:** 3
	Data type: Unsigned32	**Data set:** -	**Function diagram:** -
	P-Group: Commands	**Units group:** -	**Unit selection:** -
	Min	**Max**	**Factory setting**
	-	-	1

Description: Sets the signal source for control word 1, bit 1 (OC/OFF2).

Note: Bit 1 = 0: OFF2 (immediate pulse cancellation and power-on inhibit)
Bit 1 = 1: No OFF2 (enable is possible)
OC: Operating condition

p0845[0...n] BI: 2. OFF2 / 2. OFF2

A_INF, B_INF, SERVO, S_INF, VECTOR	**Can be changed:** T		**Access level:** 3
	Data type: Unsigned32	**Data set:** CDS	**Function diagram:** 2501, 8720, 8920
	P-Group: Commands	**Units group:** -	**Unit selection:** -
	Min	**Max**	**Factory setting**
	-	-	1

Description: Sets the signal source for the 2nd OC/OFF2.
The AND logic operation of the 1st OC/OFF2 and 2nd OC/OFF2 results in control word 1, bit 1 (OC/OFF2).

Note: For drives, the following applies:
Bit 1 = 0: OFF2 (immediate pulse cancellation and power-on inhibit)
Bit 1 = 1: No OFF2 (enable is possible)
For infeed units, the following applies:
Bit 1 = 0: OFF2 (immediate pulse cancellation for active infeed modules and Smart Line Modules, pre-charging contactor/line contactor open and power-on inhibit)
Bit 1 = 1: No OFF2 (enable is possible)
OC: Operating condition

© Siemens AG, 2005. All rights reserved

p0848[0...n] BI: 1. OFF3 / 1. OFF3

SERVO, VECTOR	**Can be changed:** T		**Access level:** 3
	Data type: Unsigned32	**Data set:** CDS	**Function diagram:** 2501
	P-Group: Commands	**Units group:** -	**Unit selection:** -
	Min	**Max**	**Factory setting**
	-	-	1

Description: Sets the signal source for the 1st OC/OFF3.
The AND logic operation of the 1st OC/OFF3 and 2nd OC/OFF3 results in control word 1, bit 2 (OC/OFF3).
Note: Bit 2 = 0: OFF3 (braking along the OFF3 ramp (p1135), then pulse cancellation and power-on inhibit)
Bit 2 = 1: No OFF3 (enable is possible)
OC: Operating condition

p0848 BI: OFF3 / OFF3

TM41	**Can be changed:** T		**Access level:** 3
	Data type: Unsigned32	**Data set:** -	**Function diagram:** -
	P-Group: Commands	**Units group:** -	**Unit selection:** -
	Min	**Max**	**Factory setting**
	-	-	1

Description: Sets the signal source for control word 1, bit 2 (OC/OFF3).
Note: Bit 2 = 0: OFF3 (pulse cancellation and power-on inhibit)
Bit 2 = 1: No OFF3 (enable is possible)
OC: Operating condition

p0849[0...n] BI: 2. OFF3 / 2. OFF3

SERVO, VECTOR	**Can be changed:** T		**Access level:** 3
	Data type: Unsigned32	**Data set:** CDS	**Function diagram:** 2501
	P-Group: Commands	**Units group:** -	**Unit selection:** -
	Min	**Max**	**Factory setting**
	-	-	1

Description: Sets the signal source for the 2nd OC/OFF3.
The AND logic operation of the 1st OC/OFF3 and 2nd OC/OFF3 results in control word 1, bit 2 (OC/OFF3).
Note: Bit 2 = 0: OFF3 (braking along the OFF3 ramp (p1135), then pulse cancellation and power-on inhibit)
Bit 2 = 1: No OFF3 (enable is possible)
OC: Operating condition

p0852[0...n] BI: Enable operation / Enable operation

A_INF, SERVO, S_INF, VECTOR	**Can be changed:** T		**Access level:** 3
	Data type: Unsigned32	**Data set:** CDS	**Function diagram:** 2442, 2443, 2501, 8920
	P-Group: Commands	**Units group:** -	**Unit selection:** -
	Min	**Max**	**Factory setting**
	-	-	1

Description: Sets the signal source for control word 1 bit 3 (enable operation)
Note: Bit 3 = 0: Inhibit operation (cancel pulses)
Bit 3 = 1: Enable operation (pulses can be enabled)

© Siemens AG, 2005. All rights reserved

p0852 BI: Enable operation / Enable operation

TM41	**Can be changed:** T		**Access level:** 3
	Data type: Unsigned32	**Data set:** -	**Function diagram:** -
	P-Group: Commands	**Units group:** -	**Unit selection:** -
	Min	**Max**	**Factory setting**
	-	-	1

Description: Sets the signal source for control word 1 bit 3 (enable operation)

Note: Bit 3 = 0: Inhibit operation (cancel pulses)
Bit 3 = 1: Enable operation (pulses can be enabled)

p0854[0...n] BI: Master ctrl by PLC / Master ctrl by PLC

A_INF, B_INF, SERVO, S_INF, VECTOR	**Can be changed:** T		**Access level:** 3
	Data type: Unsigned32	**Data set:** CDS	**Function diagram:** 2501, 2442, 2443, 8720, 8920
	P-Group: Commands	**Units group:** -	**Unit selection:** -
	Min	**Max**	**Factory setting**
	-	-	1

Description: Sets the signal source for control word 1 bit 10 (PLC control).

Note: Bit 10 = 0: PLC has no master control
Bit 10 = 1: Master ctrl by PLC

p0855[0...n] BI: Unconditionally release holding brake / Uncond open brake

SERVO, VECTOR	**Can be changed:** T		**Access level:** 3
	Data type: Unsigned32	**Data set:** CDS	**Function diagram:** 2501, 2701, 2707
	P-Group: Commands	**Units group:** -	**Unit selection:** -
	Min	**Max**	**Factory setting**
	-	-	0

Description: Sets the signal source for the command "unconditionally open holding brake".

Dependency: Refer to: p0858

Note: The signal via BI: p0858 (unconditionally close holding brake) has higher priority than via BI: p0855 (unconditionally open holding brake).

p0856[0...n] BI: Enable speed controller / Enable n_ctrl

SERVO, VECTOR	**Can be changed:** T		**Access level:** 3
	Data type: Unsigned32	**Data set:** CDS	**Function diagram:** 2501, 2701
	P-Group: Commands	**Units group:** -	**Unit selection:** -
	Min	**Max**	**Factory setting**
	-	-	1

Description: Sets the signal source for the command "enable speed controller" (r0898.12).
0 signal: Set the I component and speed controller output to zero.
1 signal: Enable the speed controller.

Dependency: Refer to: r0898

Note: If "enable speed controller" is withdrawn, then if a brake being used, then it is closed.
If "speed controller enable" is withdrawn, the pulses are not cancelled.

© Siemens AG, 2005. All rights reserved

p0857 Power module monitoring time / PM t_monit

A_INF, B_INF, SERVO, S_INF, VECTOR	**Can be changed:** T		**Access level:** 2
	Data type: Floating Point	**Data set:** -	**Function diagram:** 2610, 8932, 8964
	P-Group: Commands	**Units group:** TIME_M3	**Unit selection:** -
	Min	**Max**	**Factory setting**
	100.0 [ms]	60000.0 [ms]	6000.0 [ms]

Description: Sets the monitoring time for the power module.

The following applies for infeeds and drives:

The monitoring time is started after an 0/1 edge of the ON/OFF1 command. If the power module does not return a READY signal within the monitoring time, then fault F06000 (infeeds) or F07802 (drives) is output.

For drives, the following also applies:

After the pulse enable (operation enabled, p0852), the monitoring time is re-started. If the infeed does not signal ready to the drive within the monitoring time (using BI: p0864 of the drive), then Fault F07840 is output.

Dependency: Refer to: F06000, F07802, F07840, F30027

Notice: The time to pre-charge the DC link is monitored in the power module and cannot be changed. The maximum duration of the pre-charging depends on the power class and the power module design. The monitoring time for the pre-charging is started after the 0/1 edge of the ON/OFF1 command. Fault F30027 is output when the maximum pre-charging duration is exceeded.

Note: The pre-assignment (default) value for p0857 depends on the power class and the design of the power module.

The monitoring time for the ready signal of the power module includes the time to pre-charge the DC link and, if relevant, the de-bounce time of the contactors.

If an excessively low value is entered into p0857, then after enable, this results in a fault.

p0858[0...n] BI: Unconditionally close holding brake / Uncond close brake

SERVO, VECTOR	**Can be changed:** T		**Access level:** 2
	Data type: Unsigned32	**Data set:** CDS	**Function diagram:** 2501, 2701, 2707
	P-Group: Commands	**Units group:** -	**Unit selection:** -
	Min	**Max**	**Factory setting**
	-	-	0

Description: Sets the signal source for the command "unconditionally close holding brake".

Dependency: Refer to: p0855

Note: The signal via BI: p0858 (unconditionally close holding brake) has higher priority than via BI: p0855 (unconditionally open holding brake).

For a 1 signal via BI: p0858, the command "unconditionally close the holding brake" is executed and internally a zero setpoint is entered.

p0860 BI: Line contactor, feedback signal / Line contact feedb

A_INF, B_INF, SERVO, S_INF, VECTOR	**Can be changed:** T		**Access level:** 3
	Data type: Unsigned32	**Data set:** -	**Function diagram:** 8734, 8934
	P-Group: Commands	**Units group:** -	**Unit selection:** -
	Min	**Max**	**Factory setting**
	-	-	863.1

Description: Sets the signal source for the feedback signal from the line contactor.

Recommendation: For activated monitoring (BI: p0860 not equal to r0863.1) to control the line line contactor, the signal BO: r0863.1 of the particular drive object should be used.

Dependency: Refer to: p0861, r0863

Refer to: F07300

Notice: The line contactor monitoring is de-activated if the control signal of the particular drive object is set as the signal source for the feedback signal of the line contactor (BI: p0860 = r0863.1).

© Siemens AG, 2005. All rights reserved

Note: The state of the line contactor is monitored depending on signal BO: r0863.1.
For activated monitoring (BI: p0860 not equal to r0863.1), fault F07300 is then also output if the contactor is closed before it is controlled using r0863.1.

p0861 Line contactor monitoring time / LineContact. t_mon

A_INF, B_INF, SERVO, S_INF, VECTOR

Can be changed: T		**Access level:** 2
Data type: Floating Point	**Data set:** -	**Function diagram:** 8734, 8934
P-Group: Commands	**Units group:** TIME_M3	**Unit selection:** -
Min	**Max**	**Factory setting**
0 [ms]	5000 [ms]	100 [ms]

Description: Sets the monitoring time of the line contactor.
This time starts each time that the line contactor switches (r0863.1). If a feedback signal is not received from the line contactor within the time, a message is output.

Dependency: Refer to: p0860, r0863
Refer to: F07300

Note: The monitoring function is disabled for the factory setting of p0860.

p0862 Power module ON delay / PM t_on

A_INF, B_INF, SERVO, S_INF, VECTOR

Can be changed: T		**Access level:** 3
Data type: Floating Point	**Data set:** -	**Function diagram:** 2610, 8932
P-Group: Commands	**Units group:** TIME_M3	**Unit selection:** -
Min	**Max**	**Factory setting**
0 [ms]	65000 [ms]	0 [ms]

Description: Sets the delay time for the control command of the power module and a line contactor, if used.

Note: This means that it is possible to realize a shifted (delayed) pre-charging or power-on using a single ON command.
When the infeed units are active, before the line contactor is closed, an offset adjustment of the current measurement is carried-out for a duration of 120 ms (p3491).

r0863 CO/BO: Drive coupling status word/control word / CoupleZSW/STW

A_INF, B_INF, SERVO, S_INF, VECTOR

Can be changed: -		**Access level:** 2
Data type: Unsigned16	**Data set:** -	**Function diagram:** 1773, 1774
P-Group: Commands	**Units group:** -	**Unit selection:** -
Min	**Max**	**Factory setting**
-	-	-

Description: Displays the status and control words of the drive coupling.

Bit field:

Bit	Signal name	0 signal	1 signal	FP
00	Infeed operation	No	Yes	8732, 8932
01	Energize line contactor	No	Yes	2610, 8734, 8934

Dependency: Refer to: p0864

© Siemens AG, 2005. All rights reserved

Note: Bit 0 signals that the infeed is ready.
Bit 1 is used to control an external line contactor.
When transferring the operating message/signal via BO: r0863.0 allows several drives to start (run-up) staggered over time when they are simultaneously powered-up.
To realize this, the following connections/interconnections are required:
Drive 1: BI: p0864 with BO: Interconnect r0863.0 of the infeed
Drive 2: BI: p0864 with BO: Interconnect r0863.0 from drive 1
Drive 3: BI: p0864 with BO: Interconnect r0863.0 from drive 2, etc.
The first drive only transfers the operating signal to the next drive after it has reached its ready condition.

p0864 BI: Infeed operation / INF operation

SERVO, VECTOR

Can be changed: T		**Access level:** 2
Data type: Unsigned32	**Data set:** -	**Function diagram:** 1773, 1774, 2610
P-Group: Commands	**Units group:** -	**Unit selection:** -
Min	**Max**	**Factory setting**
-	-	0

Description: Sets the signal source for the signal "infeed operation" (BO: r0863.0).
Dependency: Refer to: r0863
Note: The sequence control of a servo/VECTOR drive requires the signal "infeed operation" (BO: r0863.0).
The following applies for an infeed without DRIVE-CLiQ:
For these infeeds, the "ready" signal is available via an output terminal. This signal must be connected to a digital input. The drives supplied from this infeed must use this signal as ready signal (BI: p0864 = digital input).

r0873 CO/BO: Infeed, total operation / INF total oper

B_INF, S_INF

Can be changed: -		**Access level:** 2
Data type: Unsigned16	**Data set:** -	**Function diagram:** -
P-Group: Commands	**Units group:** -	**Unit selection:** -
Min	**Max**	**Factory setting**
-	-	-

Description: Displays the operational readiness of the infeeds when using Smart Line Module (SLM) and Basic Line Module (BLM) together (mixed operation).
In order that the signal BO: r0873 is available on the one infeed, then BI: p0874 of the infeed must be interconnected with the BO: r0863.0 of the other infeed.
Dependency: Refer to: r0863, p0874
Note: Mixed operation is not possible with the Active Line Module (ALM)!

p0874 BI: Smart/ Basic Line Module operation / SLM/BLM operation

B_INF, S_INF

Can be changed: T		**Access level:** 2
Data type: Unsigned32	**Data set:** -	**Function diagram:** -
P-Group: Commands	**Units group:** -	**Unit selection:** -
Min	**Max**	**Factory setting**
-	-	0

Description: Setting to interconnect the ready signal for mixed operation of Smart Line Module (SLM) and Basic Line Module (BLM).
In order that the signal BO: r0873 is available on the one infeed, then BI: p0874 of the infeed must be interconnected with the BO: r0863.0 of the other infeed.
Dependency: Refer to: r0863, r0873
Note: Mixed operation is not possible with the Active Line Module (ALM)!

© Siemens AG, 2005. All rights reserved

r0896 BO: Parking axis, status word / Parking axis, ZSW

SERVO, VECTOR

Can be changed: -
Access level: 2
Data type: Unsigned8
Data set: -
Function diagram: -
P-Group: Displays, signals
Units group: -
Unit selection: -

Min	Max	Factory setting
-	-	-

Description: Displays the status word for the "parking axis" function.

Bit field:

Bit	Signal name	0 signal	1 signal	FP
00	Parking axis active	No	Yes	-

Dependency: Refer to: p0897

p0897 BI: Parking axis selection / Parking axis sel

SERVO, VECTOR

Can be changed: T
Access level: 2
Data type: Unsigned32
Data set: -
Function diagram: -
P-Group: Displays, signals
Units group: -
Unit selection: -

Min	Max	Factory setting
-	-	0

Description: Sets the signal source to select the "parking axis" function.
Dependency: Refer to: r0896
Note: After it has been selected the "parking axis" function only becomes active when the pulses are cancelled.

r0898 CO/BO: Control word drive object 1 / STW DO1

CU_S

Can be changed: -
Access level: 2
Data type: Unsigned16
Data set: -
Function diagram: -
P-Group: Displays, signals
Units group: -
Unit selection: -

Min	Max	Factory setting
-	-	-

Description: Displays the control word of drive object 1 (Control Unit).

Bit field:

Bit	Signal name	0 signal	1 signal	FP
00	Synchronization signal SYN	No	Yes	-
01	Real time synchronization PING	No	Yes	-
07	Acknowledge fault	No	Yes	-
12	Master sign-of-life bit 0	No	Yes	-
13	Master sign-of-life bit 1	No	Yes	-
14	Master sign-of-life bit 2	No	Yes	-
15	Master sign-of-life bit 3	No	Yes	-

r0898 CO/BO: Control word sequence control infeed / STW seq_ctrl INF

A_INF, S_INF

Can be changed: -
Access level: 2
Data type: Unsigned16
Data set: -
Function diagram: 1530, 8920
P-Group: Displays, signals
Units group: -
Unit selection: -

Min	Max	Factory setting
-	-	-

Description: Displays control word 1 of the infeed.

© Siemens AG, 2005. All rights reserved

Bit field:	Bit	Signal name	0 signal	1 signal	FP
	00	ON/OFF1	No	Yes	-
	01	OC / OFF2	No	Yes	-
	03	Enable operation	No	Yes	-
	05	Inhibit motoring operation	No	Yes	-
	06	Inhibit regenerating	No	Yes	-
	10	Master ctrl by PLC	No	Yes	-

Note: OC: Operating condition

r0898 CO/BO: Control word sequence control / STW seq ctrl

SERVO, VECTOR

Can be changed: - **Access level:** 2

Data type: Unsigned16 **Data set:** - **Function diagram:** 1530, 2501

P-Group: Displays, signals **Units group:** - **Unit selection:** -

Min	Max	Factory setting
-	-	-

Description: Displays the control word for the sequence control.

Bit field:	Bit	Signal name	0 signal	1 signal	FP
	00	ON/OFF1	No	Yes	-
	01	OC / OFF2	No	Yes	-
	02	OC / OFF3	No	Yes	-
	03	Enable operation	No	Yes	-
	04	Enables the ramp-function generator	No	Yes	-
	05	Freeze ramp-function generator	Yes	No	-
	06	Enable speed setpoint	No	Yes	-
	07	Command, open brake	No	Yes	-
	08	Jog 1	No	Yes	-
	09	Jog 2	No	Yes	-
	10	Master ctrl by PLC	No	Yes	-
	12	Speed controller enable	No	Yes	-
	14	Command, close brake	No	Yes	-

r0898 CO/BO: Control word sequence control infeed / STW seq_ctrl INF

B_INF

Can be changed: - **Access level:** 2

Data type: Unsigned16 **Data set:** - **Function diagram:** -

P-Group: Displays, signals **Units group:** - **Unit selection:** -

Min	Max	Factory setting
-	-	-

Description: Displays control word 1 of the infeed.

Bit field:	Bit	Signal name	0 signal	1 signal	FP
	00	ON/OFF1	No	Yes	-
	01	OC / OFF2	No	Yes	-
	10	Master ctrl by PLC	No	Yes	-

Note: OC: Operating condition

r0898 CO/BO: Control word sequence control / STW seq ctrl

TM41

Can be changed: - **Access level:** 2

Data type: Unsigned16 **Data set:** - **Function diagram:** 1530

P-Group: Displays, signals **Units group:** - **Unit selection:** -

Min	Max	Factory setting
-	-	-

Description: Displays the control word for the sequence control.

© Siemens AG, 2005. All rights reserved

Bit field:	Bit	Signal name	0 signal	1 signal	FP
	00	ON/OFF1	No	Yes	-
	01	OC / OFF2	No	Yes	-
	02	OC / OFF3	No	Yes	-
	03	Enable operation	No	Yes	-
	04	Enables the ramp-function generator	No	Yes	-
	05	Start ramp-function generator	No	Yes	-
	06	Enable speed setpoint	No	Yes	-
	07	Acknowledge fault	No	Yes	-
	13	Enable zero mark	No	Yes	-

Note: OC: Operating condition

r0899 CO/BO: Status word drive object 1 / ZSW DO1

CU_S

Can be changed: - **Access level:** 2

Data type: Unsigned16 **Data set:** - **Function diagram:** -

P-Group: Displays, signals **Units group:** - **Unit selection:** -

Min	Max	Factory setting
-	-	-

Description: Displays the status word from drive object 1 (Control Unit).

Bit field:	Bit	Signal name	0 signal	1 signal	FP
	03	Fault present	No	Yes	-
	07	Alarm present	No	Yes	-
	08	System time synchronized	No	Yes	-
	12	Slave sign-of-life bit 0	No	Yes	-
	13	Slave sign-of-life bit 1	No	Yes	-
	14	Slave sign-of-life bit 2	No	Yes	-
	15	Slave sign-of-life bit 3	No	Yes	-

r0899 CO/BO: Status word sequence control infeed / ZSW seq_ctrl INF

A_INF, S_INF

Can be changed: - **Access level:** 2

Data type: Unsigned16 **Data set:** - **Function diagram:** 1530, 8926

P-Group: Displays, signals **Units group:** - **Unit selection:** -

Min	Max	Factory setting
-	-	-

Description: Displays the status word of the infeed sequence control.

Bit field:	Bit	Signal name	0 signal	1 signal	FP
	00	Ready to power up	No	Yes	-
	01	Ready	No	Yes	-
	02	Operation enabled	No	Yes	-
	04	No OFF2 active	OFF2 active	OFF2 inactive	-
	06	Power-on inhibit	No	Yes	-
	09	Control from PLC	No	Yes	-
	11	Pre-charging compl	No	Yes	-
	12	Line contactor closed	No	Yes	8934

Note: Re bit 12:
The feedback signal of a line contactor (auxiliary contact) can be interconnected via BI: p0860.

© Siemens AG, 2005. All rights reserved

r0899 CO/BO: Status word sequence control / ZSW seq_ctrl

SERVO, VECTOR

Can be changed: -
Access level: 2
Data type: Unsigned16
Data set: -
Function diagram: 1530, 2503
P-Group: Displays, signals
Units group: -
Unit selection: -

Min	Max	Factory setting
-	-	-

Description: Displays the status word of the sequence control.

Bit field:

Bit	Signal name	0 signal	1 signal	FP
00	Ready to power up	No	Yes	-
01	Ready	No	Yes	-
02	Operation enabled	No	Yes	-
03	Jog active	No	Yes	-
04	No coasting active	OFF2 active	OFF2 inactive	-
05	No fast stop active	OFF3 active	OFF3 inactive	-
06	Power-on inhibit active	No	Yes	-
09	Control from PLC	No	Yes	-
11	Pulses enabled	No	Yes	-
12	Holding brake open	No	Yes	-
13	Command, close holding brake	No	Yes	-
14	Pulse enable from the brake control	No	Yes	-
15	Setpoint enable from the brake control	No	Yes	-

Note: Re bit 0, 1, 2, 4, 5, 6, 9:
For PROFIdrive, these signals are used for status word 1.
Re bit 13:
When the "safe brake control" (SBC) is activated and selected, the brake is no longer controlled using this signal.
Re bit 14, 15:
These signals are only of significance when the "extended brake control" function module is activated (r0108.14 = 1).

r0899 CO/BO: Status word sequence control infeed / ZSW seq_ctrl INF

B_INF

Can be changed: -
Access level: 2
Data type: Unsigned16
Data set: -
Function diagram: -
P-Group: Displays, signals
Units group: -
Unit selection: -

Min	Max	Factory setting
-	-	-

Description: Displays the status word of the infeed sequence control.

Bit field:

Bit	Signal name	0 signal	1 signal	FP
00	Ready to power up	No	Yes	-
01	Ready	No	Yes	-
02	Operation enabled	No	Yes	-
04	No OFF2 active	OFF2 active	OFF2 inactive	-
06	Power-on inhibit	No	Yes	-
09	Control from PLC	No	Yes	-
11	Pre-charging compl	No	Yes	-
12	Line contactor closed	No	Yes	-

Note: Re bit 0, 1, 2, 4, 5, 6, 9:
For PROFIdrive, these signals are used for status word 1.

© Siemens AG, 2005. All rights reserved

r0899 CO/BO: Status word sequence control / ZSW seq_ctrl

TM41	**Can be changed:** -		**Access level:** 2
	Data type: Unsigned16	**Data set:** -	**Function diagram:** 1530
	P-Group: Displays, signals	**Units group:** -	**Unit selection:** -
	Min	**Max**	**Factory setting**
	-	-	-

Description: Displays the status word of the sequence control.

Bit field:

Bit	Signal name	0 signal	1 signal	FP
00	Ready to power up	No	Yes	-
01	Ready	No	Yes	-
02	Operation enabled	No	Yes	-
04	Coast down active	Yes	No	-
05	Fast stop active	Yes	No	-
06	Power-on inhibit	No	Yes	-
08	Actual value in tolerance	No	Yes	-
09	Control from PLC	No	Yes	-
12	Holding brake closed	No	Yes	-
13	Zero mark enabled	No	Yes	-
14	Tracks A/B enabled	No	Yes	-
15	Interface encoder emulation enabled	No	Yes	-

Note: Re bit 0, 1, 2, 6:
For PROFIdrive, these signals are used for status word 1.

© Siemens AG, 2005. All rights reserved

p0915[0...35] TM17 PROFIBUS PZD setpoint assignment / TM17 PB PZD setpt

TM17	**Can be changed:** T		**Access level:** 2
	Data type: Unsigned16	**Data set:** -	**Function diagram:** -
	P-Group: Communications	**Units group:** -	**Unit selection:** -
	Min	**Max**	**Factory setting**
	0	4265	[0] 4201 [1] 4204 [2] 4211 [3] 4212 [4] 0 [5] 0 [6] 0 [7] 0 [8] 0 [9] 0 [10] 0 [11] 0 [12] 0 [13] 0 [14] 0 [15] 0 [16] 0 [17] 0 [18] 0 [19] 0 [20] 0 [21] 0 [22] 0 [23] 0 [24] 0 [25] 0 [26] 0 [27] 0 [28] 0 [29] 0 [30] 0 [31] 0 [32] 0 [33] 0 [34] 0 [35] 0

Description: Is used to assign the process data received the PROFIBUS master (PZD, setpoints).

© Siemens AG, 2005. All rights reserved

Values:

0: ZERO
4201: r4201 (system time for synchronization)
4204: r4204 (control digital output 0 ... 15)
4211: r4211 (edge mode digital input 0 ... 7)
4212: r4212 (edge mode digital input 8 ... 15)
4250: r4250 (set/resetting time, digital output 0)
4251: r4251 (set/resetting time, digital output 1)
4252: r4252 (set/resetting time, digital output 2)
4253: r4253 (set/resetting time, digital output 3)
4254: r4254 (set/resetting time, digital output 4)
4255: r4255 (set/resetting time, digital output 5)
4256: r4256 (set/resetting time, digital output 6)
4257: r4257 (set/resetting time, digital output 7)
4258: r4258 (set/resetting time, digital output 8)
4259: r4259 (set/resetting time, digital output 9)
4260: r4260 (set/resetting time, digital output 10)
4261: r4261 (set/resetting time, digital output 11)
4262: r4262 (set/resetting time, digital output 12)
4263: r4263 (set/resetting time, digital output 13)
4264: r4264 (set/resetting time, digital output 14)
4265: r4265 (set/resetting time, digital output 15)

Index:

[0] = PZD 1
[1] = PZD 2
[2] = PZD 3
[3] = PZD 4
[4] = PZD 5
[5] = PZD 6
[6] = PZD 7
[7] = PZD 8
[8] = PZD 9
[9] = PZD 10
[10] = PZD 11
[11] = PZD 12
[12] = PZD 13
[13] = PZD 14
[14] = PZD 15
[15] = PZD 16
[16] = PZD 17
[17] = PZD 18
[18] = PZD 19
[19] = PZD 20
[20] = PZD 21
[21] = PZD 22
[22] = PZD 23
[23] = PZD 24
[24] = PZD 25
[25] = PZD 26
[26] = PZD 27
[27] = PZD 28
[28] = PZD 29
[29] = PZD 30
[30] = PZD 31
[31] = PZD 32
[32] = PZD 33
[33] = PZD 34
[34] = PZD 35
[35] = PZD 36

© Siemens AG, 2005. All rights reserved

Note: Example:
The telegram for the setpoints should have the following process data (PZD) and assignments:
PZD 1 (r4201), PZD 2 (r4204), PZD 3 (r4250), PZD 4 (r4250)
The setpoint assignment must be realized as follows:
p0915[0] = 4201 - 16 bit
p0915[1] = 4204 - 16 bit
p0915[2] = 4250 - 32 bit - specified twice one after the other
p0915[3] = 4250 - 32 bit
p0915[4] = 0
...
p0915[35] = 0

p0915[0...29] TM15 PROFIBUS PZD setpoint assignment / TM15 PB PZD setpt

TM15

Can be changed: T		**Access level:** 2
Data type: Unsigned16	**Data set:** -	**Function diagram:** -
P-Group: Communications	**Units group:** -	**Unit selection:** -
Min	**Max**	**Factory setting**
0	4273	[0] 4201 [1] 4204 [2] 4205 [3] 4211 [4] 4212 [5] 4213 [6] 0 [7] 0 [8] 0 [9] 0 [10] 0 [11] 0 [12] 0 [13] 0 [14] 0 [15] 0 [16] 0 [17] 0 [18] 0 [19] 0 [20] 0 [21] 0 [22] 0 [23] 0 [24] 0 [25] 0 [26] 0 [27] 0 [28] 0 [29] 0

Description: Is used to assign the process data received the PROFIBUS master (PZD, setpoints).

© Siemens AG, 2005. All rights reserved

Values:

0: ZERO
4201: r4201 (system time for synchronization)
4204: r4204 (control digital output 0 ... 15)
4205: r4205 (control digital output 16 ... 23)
4211: r4211 (edge mode digital input 0 ... 7)
4212: r4212 (edge mode digital input 8 ... 15)
4213: r4213 (edge mode digital input 16 ... 23)
4250: r4250 (set/resetting time, digital output 0)
4251: r4251 (set/resetting time, digital output 1)
4252: r4252 (set/resetting time, digital output 2)
4253: r4253 (set/resetting time, digital output 3)
4254: r4254 (set/resetting time, digital output 4)
4255: r4255 (set/resetting time, digital output 5)
4256: r4256 (set/resetting time, digital output 6)
4257: r4257 (set/resetting time, digital output 7)
4258: r4258 (set/resetting time, digital output 8)
4259: r4259 (set/resetting time, digital output 9)
4260: r4260 (set/resetting time, digital output 10)
4261: r4261 (set/resetting time, digital output 11)
4262: r4262 (set/resetting time, digital output 12)
4263: r4263 (set/resetting time, digital output 13)
4264: r4264 (set/resetting time, digital output 14)
4265: r4265 (set/resetting time, digital output 15)
4266: r4266 (set/resetting time, digital output 16)
4267: r4267 (set/resetting time, digital output 17)
4268: r4268 (set/resetting time, digital output 18)
4269: r4269 (set/resetting time, digital output 19)
4270: r4270 (set/resetting time, digital output 20)
4271: r4271 (set/resetting time, digital output 21)
4272: r4272 (set/resetting time, digital output 22)
4273: r4273 (set/resetting time, digital output 23)

Index:

[0] = PZD 1
[1] = PZD 2
[2] = PZD 3
[3] = PZD 4
[4] = PZD 5
[5] = PZD 6
[6] = PZD 7
[7] = PZD 8
[8] = PZD 9
[9] = PZD 10
[10] = PZD 11
[11] = PZD 12
[12] = PZD 13
[13] = PZD 14
[14] = PZD 15
[15] = PZD 16
[16] = PZD 17
[17] = PZD 18
[18] = PZD 19
[19] = PZD 20
[20] = PZD 21
[21] = PZD 22
[22] = PZD 23
[23] = PZD 24
[24] = PZD 25
[25] = PZD 26
[26] = PZD 27
[27] = PZD 28
[28] = PZD 29
[29] = PZD 30

© Siemens AG, 2005. All rights reserved

Note: Example:
The telegram for the setpoints should have the following process data (PZD) and assignments:
PZD 1 (r4201), PZD 2 (r4204), PZD 3 (r4250)
The setpoint assignment must be realized as follows:
p0915[0] = 4201 - 16 bit
p0915[1] = 4204 - 16 bit
p0915[2] = 4250 - 16 bit
p0915[3] = 0
...
p0915[29] = 0

p0916[0...35] TM17 PROFIBUS PZD actual value assignment / TM17 PB PZD actVal

TM17

Can be changed: T		**Access level:** 2
Data type: Unsigned16	**Data set:** -	**Function diagram:** -
P-Group: Communications	**Units group:** -	**Unit selection:** -
Min	**Max**	**Factory setting**
0	4365	[0] 4301 [1] 4304 [2] 4311 [3] 4312 [4] 0 [5] 0 [6] 0 [7] 0 [8] 0 [9] 0 [10] 0 [11] 0 [12] 0 [13] 0 [14] 0 [15] 0 [16] 0 [17] 0 [18] 0 [19] 0 [20] 0 [21] 0 [22] 0 [23] 0 [24] 0 [25] 0 [26] 0 [27] 0 [28] 0 [29] 0 [30] 0 [31] 0 [32] 0 [33] 0 [34] 0 [35] 0

Description: Is used to assign the process data to be set to the PROFIBUS master (PZD, actual values).

© Siemens AG, 2005. All rights reserved

Values:

0: ZERO
4301: r4301 (module synchronization)
4304: r4304 (status digital input 0 ... 15)
4311: r4311 (edge status digital input 0 ... 7)
4312: r4312 (edge status digital input 8 ... 15)
4350: r4350 (edge times digital input 0)
4351: r4351 (edge times digital input 1)
4352: r4352 (edge times digital input 2)
4353: r4353 (edge times digital input 3)
4354: r4354 (edge times digital input 4)
4355: r4355 (edge times digital input 5)
4356: r4356 (edge times digital input 6)
4357: r4357 (edge times digital input 7)
4358: r4358 (edge times digital input 8)
4359: r4359 (edge times digital input 9)
4360: r4360 (edge times digital input 10)
4361: r4361 (edge times digital input 11)
4362: r4362 (edge times digital input 12)
4363: r4363 (edge times digital input 13)
4364: r4364 (edge times digital input 14)
4365: r4365 (edge times digital input 15)

Index:

[0] = PZD 1
[1] = PZD 2
[2] = PZD 3
[3] = PZD 4
[4] = PZD 5
[5] = PZD 6
[6] = PZD 7
[7] = PZD 8
[8] = PZD 9
[9] = PZD 10
[10] = PZD 11
[11] = PZD 12
[12] = PZD 13
[13] = PZD 14
[14] = PZD 15
[15] = PZD 16
[16] = PZD 17
[17] = PZD 18
[18] = PZD 19
[19] = PZD 20
[20] = PZD 21
[21] = PZD 22
[22] = PZD 23
[23] = PZD 24
[24] = PZD 25
[25] = PZD 26
[26] = PZD 27
[27] = PZD 28
[28] = PZD 29
[29] = PZD 30
[30] = PZD 31
[31] = PZD 32
[32] = PZD 33
[33] = PZD 34
[34] = PZD 35
[35] = PZD 36

© Siemens AG, 2005. All rights reserved

Note: Example:
The telegram for the actual values should have the following process data (PZD) and assignments:
PZD 1 (r4301), PZD 2 (r4304), PZD 3 (r4350), PZD 4 (r4350)
The setpoint assignment must be realized as follows:
p0916[0] = 4301 - 16 bit
p0916[1] = 4304 - 16 bit
p0916[2] = 4350 - 32 bit - specified twice one after the other
p0916[3] = 4350 - 32 bit
p0916[4] = 0
...
p0916[35] = 0

p0916[0...29] TM15 PROFIBUS PZD actual value assignment / TM15 PB PZD actVal

TM15

Can be changed: T | **Access level:** 2
Data type: Unsigned16 | **Data set:** - | **Function diagram:** -
P-Group: Communications | **Units group:** - | **Unit selection:** -

Min	Max	Factory setting
0	4373	[0] 4301 [1] 4304 [2] 4305 [3] 4311 [4] 4312 [5] 4313 [6] 0 [7] 0 [8] 0 [9] 0 [10] 0 [11] 0 [12] 0 [13] 0 [14] 0 [15] 0 [16] 0 [17] 0 [18] 0 [19] 0 [20] 0 [21] 0 [22] 0 [23] 0 [24] 0 [25] 0 [26] 0 [27] 0 [28] 0 [29] 0

Description: Is used to assign the process data to be set to the PROFIBUS master (PZD, actual values).

© Siemens AG, 2005. All rights reserved

Values:

0: ZERO
4301: r4301 (module synchronization)
4304: r4304 (status digital input 0 ... 15)
4305: r4305 (status digital input 16 ... 23)
4311: r4311 (edge status digital input 0 ... 7)
4312: r4312 (edge status digital input 8 ... 15)
4313: r4313 (edge status digital input 16 ... 23)
4350: r4350 (edge times digital input 0)
4351: r4351 (edge times digital input 1)
4352: r4352 (edge times digital input 2)
4353: r4353 (edge times digital input 3)
4354: r4354 (edge times digital input 4)
4355: r4355 (edge times digital input 5)
4356: r4356 (edge times digital input 6)
4357: r4357 (edge times digital input 7)
4358: r4358 (edge times digital input 8)
4359: r4359 (edge times digital input 9)
4360: r4360 (edge times digital input 10)
4361: r4361 (edge times digital input 11)
4362: r4362 (edge times digital input 12)
4363: r4363 (edge times digital input 13)
4364: r4364 (edge times digital input 14)
4365: r4365 (edge times digital input 15)
4366: r4366 (edge times digital input 16)
4367: r4367 (edge times digital input 17)
4368: r4368 (edge times digital input 18)
4369: r4369 (edge times digital input 19)
4370: r4370 (edge times digital input 20)
4371: r4371 (edge times digital input 21)
4372: r4372 (edge times digital input 22)
4373: r4373 (edge times digital input 23)

Index:

[0] = PZD 1
[1] = PZD 2
[2] = PZD 3
[3] = PZD 4
[4] = PZD 5
[5] = PZD 6
[6] = PZD 7
[7] = PZD 8
[8] = PZD 9
[9] = PZD 10
[10] = PZD 11
[11] = PZD 12
[12] = PZD 13
[13] = PZD 14
[14] = PZD 15
[15] = PZD 16
[16] = PZD 17
[17] = PZD 18
[18] = PZD 19
[19] = PZD 20
[20] = PZD 21
[21] = PZD 22
[22] = PZD 23
[23] = PZD 24
[24] = PZD 25
[25] = PZD 26
[26] = PZD 27
[27] = PZD 28
[28] = PZD 29
[29] = PZD 30

© Siemens AG, 2005. All rights reserved

Note: Example:
The telegram for the actual values should have the following process data (PZD) and assignments:
PZD 1 (r4301), PZD 2 (r4304), PZD 3 (r4350)
The actual value assignment must be implemented as follows:
p0916[0] = 4301 - 16 bit
p0916[1] = 4304 - 16 bit
p0916[2] = 4350 - 16 bit
p0916[3] = 0
...
p0916[29] = 0

p0918 PROFIBUS address / PROFIBUS address

CU_S	**Can be changed:** T		**Access level:** 2
	Data type: Unsigned16	**Data set:** -	**Function diagram:** 1520, 2410
	P-Group: Communications	**Units group:** -	**Unit selection:** -
	Min	**Max**	**Factory setting**
	1	126	126

Description: Displays or sets the PROFIBUS address for PROFIBUS interface X126 on the Control Unit. The address can be set as follows:
1) Using the DIP power-up the Control Unit.
--> p0918 can then only be read and displays the selected address.
--> A change only becomes effective after a POWER ON.
2) Using p0918
--> only if all of the DIP switches - from S1 to S7 - are either set to ON or OFF.
--> A change only becomes effective after save and POWER ON.

Note: Permissible PROFIBUS addresses: 1 ... 126
Address 126 is intended for commissioning.
Every PROFIBUS address change only becomes effective after a POWER ON.

p0922 PROFIBUS PZD telegram selection / PB PZD telegr_eval

CU_S	**Can be changed:** C2(1), T		**Access level:** 1
	Data type: Unsigned16	**Data set:** -	**Function diagram:** -
	P-Group: Communications	**Units group:** -	**Unit selection:** -
	Min	**Max**	**Factory setting**
	390	999	999

Description: Sets the send and receive telegram for PROFIBUS.
Either standard telegrams according to PROFIdrive can be selected or a telegram can be freely configured.

Values:
390: SIEMENS telegram 390 for the Control Unit
391: SIEMENS telegram 391 for the Control Unit
999: Free telegram configuration with BICO

p0922 PROFIBUS PZD telegram selection / PB PZD telegr_eval

A_INF, B_INF, S_INF	**Can be changed:** C2(1), T		**Access level:** 1
	Data type: Unsigned16	**Data set:** -	**Function diagram:** 1520, 2420, 2460, 2470
	P-Group: Communications	**Units group:** -	**Unit selection:** -
	Min	**Max**	**Factory setting**
	370	999	999

Description: Sets the send and receive telegram for PROFIBUS.
Either a manufacturer-specific telegram 370 can be selected or a telegram can be freely configured.

© Siemens AG, 2005. All rights reserved

Values: 370: SIEMENS telegram 370 for the infeed
999: Free telegram configuration with BICO

Dependency: Refer to: F01505, F01506

Note: If a value is not equal to 999, a telegram is set and the automatically set interconnections in the telegram are inhibited.
The inhibited interconnections can only be changed again if a value of 999 was set.

p0922 PROFIBUS PZD telegram selection / PB PZD telegr_eval

SERVO

Can be changed: C2(1), T		**Access level:** 1
Data type: Unsigned16	**Data set:** -	**Function diagram:** 1520, 2420, 2460, 2470
P-Group: Communications	**Units group:** -	**Unit selection:** -
Min	**Max**	**Factory setting**
2	999	999

Description: Sets the send and receive telegram for PROFIBUS.
Either standard telegrams according to PROFIdrive, manufacturer-specified telegrams or telegrams that can be freely configured can be selected.

Values: 2: Standard telegram 2
3: Standard telegram 3
4: Standard telegram 4
5: Standard telegram 5
6: Standard telegram 6
102: SIEMENS telegram 102
103: SIEMENS telegram 103
105: SIEMENS telegram 105
106: SIEMENS telegram 106
116: SIEMENS telegram 116
999: Free telegram configuration with BICO

Dependency: Refer to: p2038
Refer to: F01505, F01506

Note: For p0922 = 100 ... 199, p2038 is automatically set to 1 and p2038 can no longer be changed. This means that for these telegrams, the "SIMODRIVE 611 universal" interface mode is set and cannot be changed.
If a value is not equal to 999, a telegram is set and the automatically set interconnections in the telegram are inhibited.
The inhibited interconnections can only be changed again if a value of 999 was set.

p0922 PROFIBUS PZD telegram selection / PB PZD telegr_eval

VECTOR

Can be changed: C2(1), T		**Access level:** 1
Data type: Unsigned16	**Data set:** -	**Function diagram:** 1520, 2420, 2460, 2470
P-Group: Communications	**Units group:** -	**Unit selection:** -
Min	**Max**	**Factory setting**
1	999	999

Description: Sets the send and receive telegram for PROFIBUS.
Either a standard telegram 1 according to PROFIdrive can be selected or a telegram can be freely configured.

Values: 1: Standard telegram 1
20: VIK-NAMUR telegram 20
352: PCS7 telegram 352
999: Free telegram configuration with BICO

Dependency: Refer to: F01505, F01506

Note: If a value is not equal to 999, a telegram is set and the automatically set interconnections in the telegram are inhibited.
The inhibited interconnections can only be changed again if a value of 999 was set.

© Siemens AG, 2005. All rights reserved

p0922 PROFIBUS PZD telegram selection / PB PZD telegr_eval

TM41	**Can be changed:** C2(1), T		**Access level:** 1
	Data type: Unsigned16	**Data set:** -	**Function diagram:** 1520, 2420, 2460, 2470
	P-Group: Communications	**Units group:** -	**Unit selection:** -
	Min	**Max**	**Factory setting**
	3	999	999

Description: Sets the send and receive telegram for PROFIBUS.
Either a standard telegram 3 according to PROFIdrive can be selected or a telegram can be freely configured.

Values:
3: Standard telegram 3
999: Free telegram configuration with BICO

Dependency: Refer to: F01505, F01506

Note: If a value is not equal to 999, a telegram is set and the automatically set interconnections in the telegram are inhibited.
The inhibited interconnections can only be changed again if a value of 999 was set.

p0922 PROFIBUS PZD telegram selection / PB PZD telegr_eval

TM15, TM17	**Can be changed:** C2(1), T		**Access level:** 1
	Data type: Unsigned16	**Data set:** -	**Function diagram:** -
	P-Group: Communications	**Units group:** -	**Unit selection:** -
	Min	**Max**	**Factory setting**
	0	0	0

Description: Sets the send and receive telegram for PROFIBUS.
Free telegram configuring is permanently set and cannot be changed.

Values:
0: Free telegram configuring with P915/P916

p0925 PROFIBUS clock synchronous sign-of-life tolerance / Master SoL_tol

CU_S, SERVO, TM41	**Can be changed:** U, T		**Access level:** 3
	Data type: Unsigned16	**Data set:** -	**Function diagram:** 2410
	P-Group: Communications	**Units group:** -	**Unit selection:** -
	Min	**Max**	**Factory setting**
	0	65535	1

Description: Number of tolerated consecutive sign-of-life errors of the clock synchronous PROFIBUS master. The sign-of-life signal is normally received in PZD4 (control word 2) from the master.

Dependency: Refer to: p2045, r2065
Refer to: F01912

Note: The sign-of-life monitoring is disabled for p0925 = 65535.

r0930 PROFIBUS operating mode / PB operating mode

SERVO, VECTOR	**Can be changed:** -		**Access level:** 3
	Data type: Unsigned16	**Data set:** -	**Function diagram:** -
	P-Group: Setpoints	**Units group:** -	**Unit selection:** -
	Min	**Max**	**Factory setting**
	-	-	-

Description: Displays the operating mode.
1: Closed-loop speed controlled operation with ramp-function generator
3: Closed-loop speed controlled operation without ramp-function generator

© Siemens AG, 2005. All rights reserved

r0944 Counter for fault buffer changes / Fault buff change

All objects	**Can be changed:** -		**Access level:** 2
	Data type: Unsigned16	**Data set:** -	**Function diagram:** 8060
	P-Group: Messages	**Units group:** -	**Unit selection:** -
	Min	**Max**	**Factory setting**
	-	-	-

Description: Displays fault buffer changes. This counter is incremented every time the fault buffer changes.

Recommendation: Used to check whether the fault buffer has been read out consistently.

Dependency: Refer to: r0945, r0947, r0948, r0949, r2109

r0945[0...63] Fault code / Fault code

All objects	**Can be changed:** -		**Access level:** 2
	Data type: Unsigned16	**Data set:** -	**Function diagram:** 1750, 8060
	P-Group: Messages	**Units group:** -	**Unit selection:** -
	Min	**Max**	**Factory setting**
	-	-	-

Description: Displays the numbers of faults that have occurred.

Dependency: Refer to: r0947, r0948, r0949, r2109, r2130, r2133, r2136

Note: The buffer parameters are cyclically updated in the background (refer to status signal in r2139).
Fault buffer structure (general principle):
r0945[0], r0949[0], r0948[0], r2109[0] --> actual fault case, fault 1
...
r0945[7], r0949[7], r0948[7], r2109[7] --> actual fault case, fault 8
r0945[8], r0949[8], r0948[8], r2109[8] --> 1st acknowledged fault case, fault 1
...
r0945[15], r0949[15], r0948[15], r2109[15] --> 1st acknowledged fault case, fault 8
...
r0945[56], r0949[56], r0948[56], r2109[56] --> 7th acknowledged fault case, fault 1
...
r0945[63], r0949[63], r0948[63], r2109[63] --> 7th acknowledged fault case, fault 8

r0946[0...65534] Fault code list / Fault code list

All objects	**Can be changed:** -		**Access level:** 3
	Data type: Unsigned16	**Data set:** -	**Function diagram:** 8060
	P-Group: Messages	**Units group:** -	**Unit selection:** -
	Min	**Max**	**Factory setting**
	-	-	-

Description: Lists the fault codes stored in the drive unit.
The indices can only be accessed with a valid fault code.

Dependency: The parameter assigned to the fault code is entered in r0951 under the same index.
Refer to: r0951

© Siemens AG, 2005. All rights reserved

r0947[0...63] Fault number / Fault number

All objects	**Can be changed:** -		**Access level:** 3
	Data type: Unsigned16	**Data set:** -	**Function diagram:** 1750, 8060
	P-Group: Messages	**Units group:** -	**Unit selection:** -
	Min	**Max**	**Factory setting**
	-	-	-

Description: This parameter is identical to r0945.

r0948[0...63] Fault time received in milliseconds / t_fault recv ms

All objects	**Can be changed:** -		**Access level:** 3
	Data type: Unsigned32	**Data set:** -	**Function diagram:** 1750, 8060
	P-Group: Messages	**Units group:** TIME_M3	**Unit selection:** -
	Min	**Max**	**Factory setting**
	- [ms]	- [ms]	- [ms]

Description: Displays the system runtime in milliseconds when the fault occurred.
Dependency: Refer to: r0945, r0947, r0949, r2109, r2114, r2130, r2133, r2136
Note: The buffer parameters are cyclically updated in the background (refer to status signal in r2139).

r0949[0...63] Fault value / Fault value

All objects	**Can be changed:** -		**Access level:** 3
	Data type: Integer32	**Data set:** -	**Function diagram:** 1750, 8060
	P-Group: Messages	**Units group:** -	**Unit selection:** -
	Min	**Max**	**Factory setting**
	-	-	-

Description: Displays additional information about the fault that occurred (as integer number).
Dependency: Refer to: r0945, r0947, r0948, r2109, r2130, r2133, r2136
Note: The buffer parameters are cyclically updated in the background (refer to status signal in r2139).

r0951[0...65534] Fault number list / Fault number list

All objects	**Can be changed:** -		**Access level:** 4
	Data type: Unsigned16	**Data set:** -	**Function diagram:** 8060
	P-Group: Messages	**Units group:** -	**Unit selection:** -
	Min	**Max**	**Factory setting**
	-	-	-

Description: Lists parameters assigned to a fault.
Dependency: Refer to: r0946

p0952 Fault cases, counter / Fault cases No.

All objects	**Can be changed:** U, T		**Access level:** 3
	Data type: Unsigned16	**Data set:** -	**Function diagram:** 1710, 8060
	P-Group: Messages	**Units group:** -	**Unit selection:** -
	Min	**Max**	**Factory setting**
	0	65535	0

Description: Number of fault situations that have occurred since the last reset.
Dependency: The fault buffer is deleted (cleared) by setting p0952 to 0.
Refer to: r0945, r0947, r0948, r0949, r2109, r2130, r2133, r2136

© Siemens AG, 2005. All rights reserved

r0963 PROFIBUS baud rate / PROFIBUS baud rate

CU_S	**Can be changed:** -		**Access level:** 3
	Data type: Unsigned16	**Data set:** -	**Function diagram:** -
	P-Group: Communications	**Units group:** -	**Unit selection:** -
	Min	**Max**	**Factory setting**
	-	-	-

Values:

0: 9.6 kbit/s
1: 19.2 kbit/s
2: 93.75 kbit/s
3: 187.5 kbit/s
4: 500 kbit/s
6: 1.5 Mbit/s
7: 3 Mbit/s
8: 6 Mbit/s
9: 12 Mbit/s
10: 31.25 kbit/s
11: 45.45 kbit/s
255: Unknown

r0964[0...6] Device identification / Device ident.

CU_S	**Can be changed:** -		**Access level:** 2
	Data type: Unsigned16	**Data set:** -	**Function diagram:** -
	P-Group: Communications	**Units group:** -	**Unit selection:** -
	Min	**Max**	**Factory setting**
	-	-	-

Description: Displays the device identification.

Index:
[0] = Company (Siemens = 42)
[1] = Device type
[2] = Firmware version
[3] = Firmware date (year)
[4] = Firmware date (day/month)
[5] = Number of drive objects
[6] = Firmware patch/hot fix

Note: Example:
r0964[0] = 42 --> SIEMENS
r0964[1] = 5000 --> SINAMICS S CU320
r0964[1] = 5200 --> SINAMICS G CU320
r0964[2] = 102 --> first part of the firmware version V01.02 (second part, refer under index 6)
r0964[3] = 2003 --> year 2003
r0964[4] = 1401 --> 14th of January
r0964[5] = 4 --> 4 drive objects
r0964[6] = 600 --> second part, firmware version (complete version: V01.02.06.00)

r0965 PROFIBUS profile number / PB profile number

CU_S	**Can be changed:** -		**Access level:** 3
	Data type: Unsigned16	**Data set:** -	**Function diagram:** -
	P-Group: Communications	**Units group:** -	**Unit selection:** -
	Min	**Max**	**Factory setting**
	-	-	-

Description: Displays the PROFIBUS profile number and profile version. Constant value = 0303 hex.
Byte 1: Profile number = 03 hex = PROFIdrive profile
Byte 2: Profile version = 03 hex = Version 3

© Siemens AG, 2005. All rights reserved

p0969 System runtime relative / t_System relative

CU_S	**Can be changed:** T		**Access level:** 3
	Data type: Unsigned32	**Data set:** -	**Function diagram:** 1750, 8060
	P-Group: Displays, signals	**Units group:** TIME_M3	**Unit selection:** -
	Min	**Max**	**Factory setting**
	0 [ms]	4294967295 [ms]	0 [ms]

Description: Displays the system runtime in ms since the last POWER ON.

Note: The value in p0969 can only be reset to 0.

The value overflows after approx. 49 days.

p0970 Reset infeed parameter / INF par reset

A_INF, B_INF, S_INF	**Can be changed:** C2(30)		**Access level:** 2
	Data type: Unsigned16	**Data set:** -	**Function diagram:** -
	P-Group: Factory settings	**Units group:** -	**Unit selection:** -
	Min	**Max**	**Factory setting**
	0	100	0

Description: The parameter is used to initiate that the parameters of an individual infeed unit are reset.

The parameters of the basic commissioning (refer to p0009) are in this case not reset (p0107, p0108, p0121, p0170). These can only be reset using the factory setting of the complete drive unit (p0976).

The sampling times (p0111, p0112, p0115) are only not reset if this results in a conflict with the basic clock cycle (p0110).

Values:
0: not active
1: Starts a parameter reset
100: Starts a BICO interconnection reset

Note: A factory setting run can only be started if p0010 was first set to 30 (parameter reset).

At the end of the calculations, p0970 is automatically set to 0.

p0970 Reset drive parameters / Drive par reset

SERVO, VECTOR	**Can be changed:** C2(30)		**Access level:** 2
	Data type: Unsigned16	**Data set:** -	**Function diagram:** -
	P-Group: Factory settings	**Units group:** -	**Unit selection:** -
	Min	**Max**	**Factory setting**
	0	100	0

Description: The parameter is used to initiate that the parameters of an individual drive unit are reset.

Parameters p0100, p0205 (only for VECTOR) and the parameters of the basic drive commissioning (p0009) are not reset (p0107, p0108, p0111, p0112, p0115, p0121, p0130, p0131, p0140, p0141, p0142, p0170, p0186 ... p0189). These can only be reset using the factory setting of the complete drive unit (p0976).

Values:
0: not active
1: Starts a parameter reset
100: Starts a BICO interconnection reset

Note: A factory setting run can only be started if p0010 was first set to 30 (parameter reset).

At the end of the calculations, p0970 is automatically set to 0.

© Siemens AG, 2005. All rights reserved

p0970 TB30 reset parameters / TB30 par reset

TB30

Can be changed: C2(30) **Access level:** 2

Data type: Unsigned16 **Data set:** - **Function diagram:** -

P-Group: Factory settings **Units group:** - **Unit selection:** -

Min	Max	Factory setting
0	100	0

Description: The parameter is used to initiate that the parameters are reset on Terminal Board 30 (TB30).
The sampling time p4099 is not reset if in so doing a conflict occurs with the basic clock cycle.
Parameter p0161 is not reset. It is only reset if the entire drive unit is reset to the factory settings (p0976).

Values:
0: not active
1: Starts a parameter reset
100: Starts a BICO interconnection reset

Note: A factory setting run can only be started if p0010 was first set to 30 (parameter reset).
At the end of the calculations, p0970 is automatically set to 0.

p0970 TM31 reset parameters / TM31 par reset

TM31

Can be changed: C2(30) **Access level:** 2

Data type: Unsigned16 **Data set:** - **Function diagram:** -

P-Group: Factory settings **Units group:** - **Unit selection:** -

Min	Max	Factory setting
0	100	0

Description: The parameter is used to initiate that the parameters are reset on Terminal Module 31 (TM31).
The sampling time p4099 is not reset if in so doing a conflict occurs with the basic clock cycle.
Parameter p0151 is not reset. It is only reset if the entire drive unit is reset to the factory settings (p0976).

Values:
0: not active
1: Starts a parameter reset
100: Starts a BICO interconnection reset

Dependency: Refer to: p0010

Note: A factory setting run can only be started if p0010 was first set to 30 (parameter reset).
At the end of the calculations, p0970 is automatically set to 0.

p0970 TM41 reset parameters / TM41 par reset

TM41

Can be changed: C2(30) **Access level:** 2

Data type: Unsigned16 **Data set:** - **Function diagram:** -

P-Group: Factory settings **Units group:** - **Unit selection:** -

Min	Max	Factory setting
0	100	0

Description: The parameter is used to initiate that the parameters are reset on Terminal Module 41 (TM41).
Parameter p0151 is not reset. It is only reset if the entire drive unit is reset to the factory settings (p0976).

Values:
0: not active
1: Starts a parameter reset
100: Starts a BICO interconnection reset

Dependency: Refer to: p0010

Note: A factory setting run can only be started if p0010 was first set to 30 (parameter reset).
At the end of the calculations, p0970 is automatically set to 0.

© Siemens AG, 2005. All rights reserved

p0970 TM17 reset parameter / TM17 par reset

TM17

Can be changed: C2(30) **Access level:** 2
Data type: Unsigned16 **Data set:** - **Function diagram:** -
P-Group: Factory settings **Units group:** - **Unit selection:** -

Min	Max	Factory setting
0	100	0

Description: The parameter is used to initiate that the parameters are reset on Terminal Module 17 (TM17).
Parameter p0151 is not reset. It is only reset if the entire drive unit is reset to the factory settings (p0976).

Values:
0: not active
1: Starts a parameter reset
100: Starts a BICO interconnection reset

Dependency: Refer to: p0010

Note: A factory setting run can only be started if p0010 was first set to 30 (parameter reset).
At the end of the calculations, p0970 is automatically set to 0.

p0970 TM15 reset parameter / TM15 par reset

TM15

Can be changed: C2(30) **Access level:** 2
Data type: Unsigned16 **Data set:** - **Function diagram:** -
P-Group: Factory settings **Units group:** - **Unit selection:** -

Min	Max	Factory setting
0	100	0

Description: The parameter is used to initiate that the parameters are reset on Terminal Module 15 (TM15).
Parameter p0151 is not reset. It is only reset if the entire drive unit is reset to the factory settings (p0976).

Values:
0: not active
1: Starts a parameter reset
100: Starts a BICO interconnection reset

Dependency: Refer to: p0010

Note: A factory setting run can only be started if p0010 was first set to 30 (parameter reset).
At the end of the calculations, p0970 is automatically set to 0.

p0970 TM15DI/DO reset parameter / TM15D par reset

TM15DI/DO

Can be changed: C2(30) **Access level:** 2
Data type: Unsigned16 **Data set:** - **Function diagram:** -
P-Group: Factory settings **Units group:** - **Unit selection:** -

Min	Max	Factory setting
0	100	100

Description: The parameter is used to initiate that the parameters are reset on Terminal Module 15 (TM15).
The sampling time p4099 is not reset if in so doing a conflict occurs with the basic clock cycle.
Parameter p0151 is not reset. It is only reset if the entire drive unit is reset to the factory settings (p0976).

Values:
0: not active
1: Starts a parameter reset
100: Starts a BICO interconnection reset

Dependency: Refer to: p0010

Note: A factory setting run can only be started if p0010 was first set to 30 (parameter reset).
At the end of the calculations, p0970 is automatically set to 0.

© Siemens AG, 2005. All rights reserved

p0971 Save drive object parameters / Save drv_obj

All objects	**Can be changed:** U, T		**Access level:** 1
	Data type: Unsigned16	**Data set:** -	**Function diagram:** -
	P-Group: Factory settings	**Units group:** -	**Unit selection:** -
	Min	**Max**	**Factory setting**
	0	1	0

Description: Saves the parameters of the particular drive object in the non-volatile memory (CompactFlash card).

Values:
0: not active
1: Save drive object

Dependency: Refer to: p0977

Cautiont: The Control Unit power supply may only be powered-down after data has been saved (i.e. after data save has been started, wait until the parameter again has the value 0).

Note: Starting from the particular drive object, the following parameters are saved:

CU3xx: Device-specific parameters and PROFIBUS device parameters.

Other objects: Parameters of the actual object and PROFIBUS device parameters.

Prerequisite:

In order that the parameter of a drive object, saved with p0971 = 1, is read the next time that the Control Unit runs-up, then all parameters must, as a minimum, have first been saved once with p0977 = 1.

r0975[0...10] Drive object identification / DO identification

All objects	**Can be changed:** -		**Access level:** 2
	Data type: Unsigned16	**Data set:** -	**Function diagram:** -
	P-Group: Communications	**Units group:** -	**Unit selection:** -
	Min	**Max**	**Factory setting**
	-	-	-

Description: Displays the identification of the drive object.

Index:
[0] = Company (Siemens = 42)
[1] = Drive object type
[2] = Firmware version
[3] = Firmware date (year)
[4] = Firmware date (day/month)
[5] = PROFIdrive drive object, type class
[6] = PROFIdrive drive object, sub-type Class 1
[7] = Reserved
[8] = Reserved
[9] = Reserved
[10] = Firmware patch/hot fix

Note: Example:

r0975[0] = 42 --> SIEMENS

r0975[1] = 11 --> SERVO drive object type

r0975[2] = 102 --> first part, firmware version V01.02 (second part, refer to index 10)

r0975[3] = 2003 --> year 2003

r0975[4] = 1401 --> 14th of January

r0975[5] = 1 --> PROFIdrive drive object, type class

r0975[6] = 9 --> PROFIdrive drive object sub-type class 1

r0975[7] = 0 (reserved)

r0975[8] = 0 (reserved)

r0975[9] = 0 (reserved)

r0975[10] = 600 --> second part, firmware version (complete version: V01.02.06.00)

© Siemens AG, 2005. All rights reserved

p0976 Reset and load all parameters / Reset load all par

CU_S	**Can be changed:** C1(30)		**Access level:** 2
	Data type: Unsigned16	**Data set:** -	**Function diagram:** -
	P-Group: Factory settings	**Units group:** -	**Unit selection:** -
	Min	**Max**	**Factory setting**
	0	1013	0

Description: Resets or downloads all parameters of the drive system.

Values:
0: not active
1: Starts to reset all parameters to factory setting
2: Starts to download param. saved in non-volatile way w/ p0977 = 1
3: Start to download the volatile parameters from RAM
10: Starts to download param. saved in non-volatile way w/ p0977=10
11: Starts to download param. saved in non-volatile way w/ p0977=11
12: Starts to download param. saved in non-volatile way w/ p0977=12
20: Starts to download Siemens internal setting 20
21: Starts to download Siemens internal setting 21
22: Starts to download Siemens internal setting 22
23: Starts to download Siemens internal setting 23
24: Starts to download Siemens internal setting 24
25: Starts to download Siemens internal setting 25
26: Starts to download Siemens internal setting 26
100: Starts to reset all BICO interconnections
1011: Starts to download param. saved in volatile way w/ p0977 = 1011
1012: Starts to download param. saved in volatile way w/ p0977 = 1012
1013: Starts to download param. saved in volatile way w/ p0977 = 1013

Note: After all of the parameters have been reset to their factory setting, the system must commissioned for the first time again.

Resetting or loading is realized in the non-volatile memory.

Procedure:

1. Set p0009 = 30 (parameter reset).
2. Set p0976 to "required value". A new system run-up is started.

p0009 is automatically set to 0 after this has been carried-out.

p0977 Save all parameters / Save all par

CU_S	**Can be changed:** U, T		**Access level:** 1
	Data type: Unsigned16	**Data set:** -	**Function diagram:** -
	P-Group: Factory settings	**Units group:** -	**Unit selection:** -
	Min	**Max**	**Factory setting**
	0	1013	0

Description: Saves all parameters of the drive system to the non-volatile memory (CompactFlash card).

Values:
0: not active
1: Save in non-volatile fashion - downloaded at POWER ON
10: Save as opt. in non-vol. fashion - downloaded w/ p0976=10
11: Save as opt. in non-vol. fashion - downloaded w/ p0976=11
12: Save as opt. in non-vol. fashion - downloaded w/ p0976=12
20: Save in a non-volatile fashion as setting 20 (reserved)
21: Save in a non-volatile fashion as setting 21 (reserved)
22: Save in a non-volatile fashion as setting 22 (reserved)
23: Save in a non-volatile fashion as setting 23 (reserved)
24: Save in a non-volatile fashion as setting 24 (reserved)
25: Save in a non-volatile fashion as setting 25 (reserved)
26: Save in a non-volatile fashion as setting 26 (reserved)
1011: Save in volatile fashion, loaded with p0976=1011
1012: Save in volatile fashion, loaded with p0976=1012
1013: Save in volatile fashion, loaded with p0976=1013

Dependency: Refer to: p0976

© Siemens AG, 2005. All rights reserved

Cautiont: The Control Unit power supply may only be powered-down after data has been saved (i.e. after data save has been started, wait until the parameter again has the value 0).

Note: Parameters saved with p0977 = 10, 11 or 12 can be downloaded again with p0976 = 10, 11 or 12.

p0978[0...16] List of drive objects / List of the DO

CU_S

Can be changed: C1(1) **Access level:** 2

Data type: Unsigned8 **Data set:** - **Function diagram:** -

P-Group: Topology **Units group:** - **Unit selection:** -

Min	Max	Factory setting
0	255	[0] 1 [1] 0 [2] 0 [3] 0 [4] 0 [5] 0 [6] 0 [7] 0 [8] 0 [9] 0 [10] 0 [11] 0 [12] 0 [13] 0 [14] 0 [15] 0 [16] 0

Description: This parameter is an image of p0101 in conformance with PROFIdrive.

Parameters p0101 and p0978 contain the following information:

1) The same number of drive objects

2) The same drive objects

In this sense, they are consistent.

Difference between p0101 and p0978:

p0978 can be re-sorted and a zero inserted in order to identify those drive objects that participate in the process data exchange and to define their sequence in the process data exchange. Drive objects that are listed after the first zero, are excluded from the process data exchange.

For p0978, in addition, the value 255 can be inserted a multiple number of times.

p0978[n] = 255 means: The drive object is visible for the PROFIBUS master and is empty (without any actual process data exchange). This allows cyclic communications of a PROFIBUS master with unchanged configuring to the drive units with a lower number of drive objects.

Dependency: Refer to: p0101, p0971, p0977

Note: p0978 cannot be changed when the drive system is first commissioned. The reason for this is that at this time the actual topology has still not been acknowledged (p0099 is still not equal to r0098 and p0009 is set to 0).

r0979[0...30] Encoder format PROFIdrive / Encoder format

SERVO, VECTOR

Can be changed: - **Access level:** 3

Data type: Unsigned32 **Data set:** - **Function diagram:** 4704

P-Group: Encoder **Units group:** - **Unit selection:** -

Min	Max	Factory setting
-	-	-

Description: Displays the actual position encoder used according to PROFIdrive.

© Siemens AG, 2005. All rights reserved

Index: [0] = Header
[1] = Type, encoder 1
[2] = Resolution encod 1
[3] = Shift factor G1_XACT1
[4] = Shift factor G1_XACT2
[5] = Distinguishable revolutions encoder 1
[6] = Reserved
[7] = Reserved
[8] = Reserved
[9] = Reserved
[10] = Reserved
[11] = Type, encoder 2
[12] = Resolution encod 2
[13] = Shift factor G2_XACT1
[14] = Shift factor G2_XACT2
[15] = Distinguishable revolutions encoder 2
[16] = Reserved
[17] = Reserved
[18] = Reserved
[19] = Reserved
[20] = Reserved
[21] = Type, encoder 3
[22] = Resolution encod 3
[23] = Shift factor G3_XACT1
[24] = Shift factor G3_XACT2
[25] = Distinguishable revolutions encoder 3
[26] = Reserved
[27] = Reserved
[28] = Reserved
[29] = Reserved
[30] = Reserved

Note: Information on the individual indices should be taken from the PROFIdrive Profile Drive Technology.

r0979[0...10] Encoder format PROFIdrive / Encoder format

TM41

Can be changed: -		**Access level:** 3
Data type: Unsigned32	**Data set:** -	**Function diagram:** 4704
P-Group: Encoder	**Units group:** -	**Unit selection:** -
Min	**Max**	**Factory setting**
-	-	-

Description: Displays the actual position encoder used according to PROFIdrive.

Index: [0] = Header
[1] = Type, encoder 1
[2] = Resolution encod 1
[3] = Shift factor G1_XACT1
[4] = Shift factor G1_XACT2
[5] = Distinguishable revolutions encoder 1
[6] = Reserved
[7] = Reserved
[8] = Reserved
[9] = Reserved
[10] = Reserved

Note: Information on the individual indices should be taken from the PROFIdrive Profile Drive Technology.

© Siemens AG, 2005. All rights reserved

r0980[0...99] List of existing parameters 1 / List avail par 1

All objects	**Can be changed:** -		**Access level:** 4
	Data type: Unsigned16	**Data set:** -	**Function diagram:** -
	P-Group: -	**Units group:** -	**Unit selection:** -
	Min	**Max**	**Factory setting**
	-	-	-

Description: Displays the parameters that exist for this drive.

Dependency: Refer to: r0981, r0989

Note: The existing parameters are displayed in indices 0 to 98. If an index contains the value 0, then the list ends here. In a long list, index 99 contains the parameter number at which position the list continues.

This list completely comprises the following parameters:

r0980[0...99], r0981[0...99] ... r0989[0...99]

The parameters in this list are not displayed in the expert list of the commissioning software. However, they can be read from a higher-level control system (e.g. PROFIBUS master).

r0981[0...99] List of existing parameters 2 / List avail par 2

All objects	**Can be changed:** -		**Access level:** 4
	Data type: Unsigned16	**Data set:** -	**Function diagram:** -
	P-Group: -	**Units group:** -	**Unit selection:** -
	Min	**Max**	**Factory setting**
	-	-	-

Description: Displays the parameters that exist for this drive.

Dependency: Refer to: r0980, r0989

Note: The existing parameters are displayed in indices 0 to 98. If an index contains the value 0, then the list ends here. In a long list, index 99 contains the parameter number at which position the list continues.

This list completely comprises the following parameters:

r0980[0...99], r0981[0...99] ... r0989[0...99]

The parameters in this list are not displayed in the expert list of the commissioning software. However, they can be read from a higher-level control system (e.g. PROFIBUS master).

r0989[0...99] List of existing parameters 10 / List avail par 10

All objects	**Can be changed:** -		**Access level:** 4
	Data type: Unsigned16	**Data set:** -	**Function diagram:** -
	P-Group: -	**Units group:** -	**Unit selection:** -
	Min	**Max**	**Factory setting**
	-	-	-

Description: Displays the parameters that exist for this drive.

Dependency: Refer to: r0980, r0981

Note: The existing parameters are displayed in indices 0 to 98. If an index contains the value 0, then the list ends here.

This list completely comprises the following parameters:

r0980[0...99], r0981[0...99] ... r0989[0...99]

The parameters in this list are not displayed in the expert list of the commissioning software. However, they can be read from a higher-level control system (e.g. PROFIBUS master).

© Siemens AG, 2005. All rights reserved

r0990[0...99] List of modified parameters 1 / List chang. par 1

All objects	**Can be changed:** -		**Access level:** 3
	Data type: Unsigned16	**Data set:** -	**Function diagram:** -
	P-Group: -	**Units group:** -	**Unit selection:** -
	Min	**Max**	**Factory setting**
	-	-	-

Description: Displays those parameters with a value other than the factory setting for this drive.

Dependency: Refer to: r0991, r0999

Note: Modified parameters are displayed in indices 0 to 98. If an index contains the value 0, then the list ends here. In a long list, index 99 contains the parameter number at which position the list continues.

This list completely comprises the following parameters:

r0990[0...99], r0991[0...99] ... r0999[0...99]

The parameters in this list are not displayed in the expert list of the commissioning software. However, they can be read from a higher-level control system (e.g. PROFIBUS master).

r0991[0...99] List of modified parameters 2 / List chang. par 2

All objects	**Can be changed:** -		**Access level:** 3
	Data type: Unsigned16	**Data set:** -	**Function diagram:** -
	P-Group: -	**Units group:** -	**Unit selection:** -
	Min	**Max**	**Factory setting**
	-	-	-

Description: Displays those parameters with a value other than the factory setting for this drive.

Dependency: Refer to: r0990, r0999

Note: Modified parameters are displayed in indices 0 to 98. If an index contains the value 0, then the list ends here. In a long list, index 99 contains the parameter number at which position the list continues.

This list completely comprises the following parameters:

r0990[0...99], r0991[0...99] ... r0999[0...99]

The parameters in this list are not displayed in the expert list of the commissioning software. However, they can be read from a higher-level control system (e.g. PROFIBUS master).

r0999[0...99] List of modified parameters 10 / List chang. par 10

All objects	**Can be changed:** -		**Access level:** 3
	Data type: Unsigned16	**Data set:** -	**Function diagram:** -
	P-Group: -	**Units group:** -	**Unit selection:** -
	Min	**Max**	**Factory setting**
	-	-	-

Description: Displays those parameters with a value other than the factory setting for this drive.

Dependency: Refer to: r0990, r0991

Note: Modified parameters are displayed in indices 0 to 98. If an index contains the value 0, then the list ends here.

This list completely comprises the following parameters:

r0990[0...99], r0991[0...99] ... r0999[0...99]

The parameters in this list are not displayed in the expert list of the commissioning software. However, they can be read from a higher-level control system (e.g. PROFIBUS master).

© Siemens AG, 2005. All rights reserved

p1000[0...n] Macro Connector Inputs (CI) for speed setpoints / Macro CI n_set

SERVO, VECTOR	**Can be changed:** C2(1), T		**Access level:** 1
	Data type: Unsigned32	**Data set:** CDS	**Function diagram:** -
	P-Group: Commands	**Units group:** -	**Unit selection:** -
	Min	**Max**	**Factory setting**
	0	999999	0

Description: Runs the appropriate ACX file on the CompactFlash card.
The Connector Inputs (CI) for the speed setpoints of the appropriate Command Data Set (CDS) are appropriately interconnected.
The selected ACX file must be located in the following directory:
... /PMACROS/<drive object>/P1000/PMxxxxxx.ACX
Example:
p1000 = 6 --> the file PM000006.ACX is run.

Dependency: The ACX file to be run must be created according to the definition for ACX macros and must be saved in the directory intended on the CompactFlash card.
Refer to: p0015, p0700, p1500, r8572

Notice: No errors were issued during fast commissioning (p3900 = 1) when writing to parameters of the QUICK_IBN group!

Note: The macros in the specified directory are displayed in r8572.
Macros available as standard are described in the technical documentation of the particular product.
CI: Connector Input

p1000[0...n] Macro Connector Inputs (CI) for velocity setpoints / Macro CI n_set

SERVO (Lin)	**Can be changed:** C2(1), T		**Access level:** 1
	Data type: Unsigned32	**Data set:** CDS	**Function diagram:** -
	P-Group: Commands	**Units group:** -	**Unit selection:** -
	Min	**Max**	**Factory setting**
	0	999999	0

Description: Runs the appropriate ACX file on the CompactFlash card.
The Connector Inputs (CI) for the speed setpoints of the appropriate Command Data Set (CDS) are appropriately interconnected.
The selected ACX file must be located in the following directory:
... /PMACROS/<drive object>/P1000/PMxxxxxx.ACX
Example:
p1000 = 6 --> the file PM000006.ACX is run.

Dependency: The ACX file to be run must be created according to the definition for ACX macros and must be saved in the directory intended on the CompactFlash card.
Refer to: p0015, p0700, p1500, r8572

Notice: No errors were issued during fast commissioning (p3900 = 1) when writing to parameters of the QUICK_IBN group!

Note: The macros in the specified directory are displayed in r8572.
Macros available as standard are described in the technical documentation of the particular product.
CI: Connector Input

p1001[0...n] CO: Fixed speed setpoint 1 / n_set_fixed 1

SERVO (Extended setp.), VECTOR	**Can be changed:** U, T		**Access level:** 2
	Data type: Floating Point	**Data set:** DDS	**Function diagram:** 3010
	P-Group: Setpoints	**Units group:** SPEED_ROT	**Unit selection:** -
	Min	**Max**	**Factory setting**
	-210000.000 [1/min]	210000.000 [1/min]	0.000 [1/min]

Description: Sets a value for the fixed speed / velocity setpoint 1.

Dependency: Refer to: p1020, p1021, p1022, p1023, r1024, r1197

© Siemens AG, 2005. All rights reserved

p1001[0...n] CO: Fixed velocity setpoint 1 / n_set_fixed 1

SERVO (Lin, Extended setp.)

Can be changed: U, T		**Access level:** 2
Data type: Floating Point	**Data set:** DDS	**Function diagram:** 3010
P-Group: Setpoints	**Units group:** SPEED_LIN_METRIC_P3	**Unit selection:** -
Min	**Max**	**Factory setting**
-1000.000 [m/min]	1000.000 [m/min]	0.000 [m/min]

Description: Sets a value for the fixed speed / velocity setpoint 1.
Dependency: Refer to: p1020, p1021, p1022, p1023, r1024, r1197

p1002[0...n] CO: Fixed speed setpoint 2 / n_set_fixed 2

SERVO (Extended setp.), VECTOR

Can be changed: U, T		**Access level:** 2
Data type: Floating Point	**Data set:** DDS	**Function diagram:** 3010
P-Group: Setpoints	**Units group:** SPEED_ROT	**Unit selection:** -
Min	**Max**	**Factory setting**
-210000.000 [1/min]	210000.000 [1/min]	0.000 [1/min]

Description: Sets a value for the fixed speed / velocity setpoint 2.
Dependency: Refer to: p1020, p1021, p1022, p1023, r1024, r1197

p1002[0...n] CO: Fixed velocity setpoint 2 / n_set_fixed 2

SERVO (Lin, Extended setp.)

Can be changed: U, T		**Access level:** 2
Data type: Floating Point	**Data set:** DDS	**Function diagram:** 3010
P-Group: Setpoints	**Units group:** SPEED_LIN_METRIC_P3	**Unit selection:** -
Min	**Max**	**Factory setting**
-1000.000 [m/min]	1000.000 [m/min]	0.000 [m/min]

Description: Sets a value for the fixed speed / velocity setpoint 2.
Dependency: Refer to: p1020, p1021, p1022, p1023, r1024, r1197

p1003[0...n] CO: Fixed speed setpoint 3 / n_set_fixed 3

SERVO (Extended setp.), VECTOR

Can be changed: U, T		**Access level:** 2
Data type: Floating Point	**Data set:** DDS	**Function diagram:** 3010
P-Group: Setpoints	**Units group:** SPEED_ROT	**Unit selection:** -
Min	**Max**	**Factory setting**
-210000.000 [1/min]	210000.000 [1/min]	0.000 [1/min]

Description: Sets a value for the fixed speed / velocity setpoint 3.
Dependency: Refer to: p1020, p1021, p1022, p1023, r1024, r1197

p1003[0...n] CO: Fixed velocity setpoint 3 / n_set_fixed 3

SERVO (Lin, Extended setp.)

Can be changed: U, T		**Access level:** 2
Data type: Floating Point	**Data set:** DDS	**Function diagram:** 3010
P-Group: Setpoints	**Units group:** SPEED_LIN_METRIC_P3	**Unit selection:** -
Min	**Max**	**Factory setting**
-1000.000 [m/min]	1000.000 [m/min]	0.000 [m/min]

Description: Sets a value for the fixed speed / velocity setpoint 3.
Dependency: Refer to: p1020, p1021, p1022, p1023, r1024, r1197

© Siemens AG, 2005. All rights reserved

p1004[0...n] **CO: Fixed speed setpoint 4 / n_set_fixed 4**

SERVO (Extended setp.), VECTOR

Can be changed: U, T		**Access level:** 2
Data type: Floating Point	**Data set:** DDS	**Function diagram:** 3010
P-Group: Setpoints	**Units group:** SPEED_ROT	**Unit selection:** -
Min	**Max**	**Factory setting**
-210000.000 [1/min]	210000.000 [1/min]	0.000 [1/min]

Description: Sets a value for the fixed speed / velocity setpoint 4.
Dependency: Refer to: p1020, p1021, p1022, p1023, r1024, r1197

p1004[0...n] **CO: Fixed velocity setpoint 4 / n_set_fixed 4**

SERVO (Lin, Extended setp.)

Can be changed: U, T		**Access level:** 2
Data type: Floating Point	**Data set:** DDS	**Function diagram:** 3010
P-Group: Setpoints	**Units group:** SPEED_LIN_METRIC_P3	**Unit selection:** -
Min	**Max**	**Factory setting**
-1000.000 [m/min]	1000.000 [m/min]	0.000 [m/min]

Description: Sets a value for the fixed speed / velocity setpoint 4.
Dependency: Refer to: p1020, p1021, p1022, p1023, r1024, r1197

p1005[0...n] **CO: Fixed speed setpoint 5 / n_set_fixed 5**

SERVO (Extended setp.), VECTOR

Can be changed: U, T		**Access level:** 2
Data type: Floating Point	**Data set:** DDS	**Function diagram:** 3010
P-Group: Setpoints	**Units group:** SPEED_ROT	**Unit selection:** -
Min	**Max**	**Factory setting**
-210000.000 [1/min]	210000.000 [1/min]	0.000 [1/min]

Description: Sets a value for the fixed speed / velocity setpoint 5.
Dependency: Refer to: p1020, p1021, p1022, p1023, r1024, r1197

p1005[0...n] **CO: Fixed velocity setpoint 5 / n_set_fixed 5**

SERVO (Lin, Extended setp.)

Can be changed: U, T		**Access level:** 2
Data type: Floating Point	**Data set:** DDS	**Function diagram:** 3010
P-Group: Setpoints	**Units group:** SPEED_LIN_METRIC_P3	**Unit selection:** -
Min	**Max**	**Factory setting**
-1000.000 [m/min]	1000.000 [m/min]	0.000 [m/min]

Description: Sets a value for the fixed speed / velocity setpoint 5.
Dependency: Refer to: p1020, p1021, p1022, p1023, r1024, r1197

p1006[0...n] **CO: Fixed speed setpoint 6 / n_set_fixed 6**

SERVO (Extended setp.), VECTOR

Can be changed: U, T		**Access level:** 2
Data type: Floating Point	**Data set:** DDS	**Function diagram:** 3010
P-Group: Setpoints	**Units group:** SPEED_ROT	**Unit selection:** -
Min	**Max**	**Factory setting**
-210000.000 [1/min]	210000.000 [1/min]	0.000 [1/min]

Description: Sets a value for the fixed speed / velocity setpoint 6.
Dependency: Refer to: p1020, p1021, p1022, p1023, r1024, r1197

© Siemens AG, 2005. All rights reserved

p1006[0...n] CO: Fixed velocity setpoint 6 / n_set_fixed 6

SERVO (Lin, Extended setp.)

Can be changed: U, T		**Access level:** 2
Data type: Floating Point	**Data set:** DDS	**Function diagram:** 3010
P-Group: Setpoints	**Units group:** SPEED_LIN_METRIC_P3	**Unit selection:** -
Min	**Max**	**Factory setting**
-1000.000 [m/min]	1000.000 [m/min]	0.000 [m/min]

Description: Sets a value for the fixed speed / velocity setpoint 6.
Dependency: Refer to: p1020, p1021, p1022, p1023, r1024, r1197

p1007[0...n] CO: Fixed speed setpoint 7 / n_set_fixed 7

SERVO (Extended setp.), VECTOR

Can be changed: U, T		**Access level:** 2
Data type: Floating Point	**Data set:** DDS	**Function diagram:** 3010
P-Group: Setpoints	**Units group:** SPEED_ROT	**Unit selection:** -
Min	**Max**	**Factory setting**
-210000.000 [1/min]	210000.000 [1/min]	0.000 [1/min]

Description: Sets a value for the fixed speed / velocity setpoint 7.
Dependency: Refer to: p1020, p1021, p1022, p1023, r1024, r1197

p1007[0...n] CO: Fixed velocity setpoint 7 / n_set_fixed 7

SERVO (Lin, Extended setp.)

Can be changed: U, T		**Access level:** 2
Data type: Floating Point	**Data set:** DDS	**Function diagram:** 3010
P-Group: Setpoints	**Units group:** SPEED_LIN_METRIC_P3	**Unit selection:** -
Min	**Max**	**Factory setting**
-1000.000 [m/min]	1000.000 [m/min]	0.000 [m/min]

Description: Sets a value for the fixed speed / velocity setpoint 7.
Dependency: Refer to: p1020, p1021, p1022, p1023, r1024, r1197

p1008[0...n] CO: Fixed speed setpoint 8 / n_set_fixed 8

SERVO (Extended setp.), VECTOR

Can be changed: U, T		**Access level:** 2
Data type: Floating Point	**Data set:** DDS	**Function diagram:** 3010
P-Group: Setpoints	**Units group:** SPEED_ROT	**Unit selection:** -
Min	**Max**	**Factory setting**
-210000.000 [1/min]	210000.000 [1/min]	0.000 [1/min]

Description: Sets a value for the fixed speed / velocity setpoint 8.
Dependency: Refer to: p1020, p1021, p1022, p1023, r1024, r1197

p1008[0...n] CO: Fixed velocity setpoint 8 / n_set_fixed 8

SERVO (Lin, Extended setp.)

Can be changed: U, T		**Access level:** 2
Data type: Floating Point	**Data set:** DDS	**Function diagram:** 3010
P-Group: Setpoints	**Units group:** SPEED_LIN_METRIC_P3	**Unit selection:** -
Min	**Max**	**Factory setting**
-1000.000 [m/min]	1000.000 [m/min]	0.000 [m/min]

Description: Sets a value for the fixed speed / velocity setpoint 8.
Dependency: Refer to: p1020, p1021, p1022, p1023, r1024, r1197

© Siemens AG, 2005. All rights reserved

p1009[0...n] CO: Fixed speed setpoint 9 / n_set_fixed 9

SERVO (Extended setp.), VECTOR

Can be changed: U, T		**Access level:** 2
Data type: Floating Point	**Data set:** DDS	**Function diagram:** 3010
P-Group: Setpoints	**Units group:** SPEED_ROT	**Unit selection:** -
Min	**Max**	**Factory setting**
-210000.000 [1/min]	210000.000 [1/min]	0.000 [1/min]

Description: Sets a value for the fixed speed / velocity setpoint 9.
Dependency: Refer to: p1020, p1021, p1022, p1023, r1024, r1197

p1009[0...n] CO: Fixed velocity setpoint 9 / n_set_fixed 9

SERVO (Lin, Extended setp.)

Can be changed: U, T		**Access level:** 2
Data type: Floating Point	**Data set:** DDS	**Function diagram:** 3010
P-Group: Setpoints	**Units group:** SPEED_LIN_METRIC_P3	**Unit selection:** -
Min	**Max**	**Factory setting**
-1000.000 [m/min]	1000.000 [m/min]	0.000 [m/min]

Description: Sets a value for the fixed speed / velocity setpoint 9.
Dependency: Refer to: p1020, p1021, p1022, p1023, r1024, r1197

p1010[0...n] CO: Fixed speed setpoint 10 / n_set_fixed 10

SERVO (Extended setp.), VECTOR

Can be changed: U, T		**Access level:** 2
Data type: Floating Point	**Data set:** DDS	**Function diagram:** 3010
P-Group: Setpoints	**Units group:** SPEED_ROT	**Unit selection:** -
Min	**Max**	**Factory setting**
-210000.000 [1/min]	210000.000 [1/min]	0.000 [1/min]

Description: Sets a value for the fixed speed / velocity setpoint 10.
Dependency: Refer to: p1020, p1021, p1022, p1023, r1024, r1197

p1010[0...n] CO: Fixed velocity setpoint 10 / n_set_fixed 10

SERVO (Lin, Extended setp.)

Can be changed: U, T		**Access level:** 2
Data type: Floating Point	**Data set:** DDS	**Function diagram:** 3010
P-Group: Setpoints	**Units group:** SPEED_LIN_METRIC_P3	**Unit selection:** -
Min	**Max**	**Factory setting**
-1000.000 [m/min]	1000.000 [m/min]	0.000 [m/min]

Description: Sets a value for the fixed speed / velocity setpoint 10.
Dependency: Refer to: p1020, p1021, p1022, p1023, r1024, r1197

p1011[0...n] CO: Fixed speed setpoint 11 / n_set_fixed 11

SERVO (Extended setp.), VECTOR

Can be changed: U, T		**Access level:** 2
Data type: Floating Point	**Data set:** DDS	**Function diagram:** 3010
P-Group: Setpoints	**Units group:** SPEED_ROT	**Unit selection:** -
Min	**Max**	**Factory setting**
-210000.000 [1/min]	210000.000 [1/min]	0.000 [1/min]

Description: Sets a value for the fixed speed / velocity setpoint 11.
Dependency: Refer to: p1020, p1021, p1022, p1023, r1024, r1197

© Siemens AG, 2005. All rights reserved

p1011[0...n] CO: Fixed velocity setpoint 11 / n_set_fixed 11

SERVO (Lin, Extended setp.)

Can be changed: U, T		**Access level:** 2
Data type: Floating Point	**Data set:** DDS	**Function diagram:** 3010
P-Group: Setpoints	**Units group:** SPEED_LIN_METRIC_P3	**Unit selection:** -
Min	**Max**	**Factory setting**
-1000.000 [m/min]	1000.000 [m/min]	0.000 [m/min]

Description: Sets a value for the fixed speed / velocity setpoint 11.
Dependency: Refer to: p1020, p1021, p1022, p1023, r1024, r1197

p1012[0...n] CO: Fixed speed setpoint 12 / n_set_fixed 12

SERVO (Extended setp.), VECTOR

Can be changed: U, T		**Access level:** 2
Data type: Floating Point	**Data set:** DDS	**Function diagram:** 3010
P-Group: Setpoints	**Units group:** SPEED_ROT	**Unit selection:** -
Min	**Max**	**Factory setting**
-210000.000 [1/min]	210000.000 [1/min]	0.000 [1/min]

Description: Sets a value for the fixed speed / velocity setpoint 12.
Dependency: Refer to: p1020, p1021, p1022, p1023, r1024, r1197

p1012[0...n] CO: Fixed velocity setpoint 12 / n_set_fixed 12

SERVO (Lin, Extended setp.)

Can be changed: U, T		**Access level:** 2
Data type: Floating Point	**Data set:** DDS	**Function diagram:** 3010
P-Group: Setpoints	**Units group:** SPEED_LIN_METRIC_P3	**Unit selection:** -
Min	**Max**	**Factory setting**
-1000.000 [m/min]	1000.000 [m/min]	0.000 [m/min]

Description: Sets a value for the fixed speed / velocity setpoint 12.
Dependency: Refer to: p1020, p1021, p1022, p1023, r1024, r1197

p1013[0...n] CO: Fixed speed setpoint 13 / n_set_fixed 13

SERVO (Extended setp.), VECTOR

Can be changed: U, T		**Access level:** 2
Data type: Floating Point	**Data set:** DDS	**Function diagram:** 3010
P-Group: Setpoints	**Units group:** SPEED_ROT	**Unit selection:** -
Min	**Max**	**Factory setting**
-210000.000 [1/min]	210000.000 [1/min]	0.000 [1/min]

Description: Sets a value for the fixed speed / velocity setpoint 13.
Dependency: Refer to: p1020, p1021, p1022, p1023, r1024, r1197

p1013[0...n] CO: Fixed velocity setpoint 13 / n_set_fixed 13

SERVO (Lin, Extended setp.)

Can be changed: U, T		**Access level:** 2
Data type: Floating Point	**Data set:** DDS	**Function diagram:** 3010
P-Group: Setpoints	**Units group:** SPEED_LIN_METRIC_P3	**Unit selection:** -
Min	**Max**	**Factory setting**
-1000.000 [m/min]	1000.000 [m/min]	0.000 [m/min]

Description: Sets a value for the fixed speed / velocity setpoint 13.
Dependency: Refer to: p1020, p1021, p1022, p1023, r1024, r1197

© Siemens AG, 2005. All rights reserved

p1014[0...n] CO: Fixed speed setpoint 14 / n_set_fixed 14

SERVO (Extended setp.), VECTOR

Can be changed: U, T		**Access level:** 2
Data type: Floating Point	**Data set:** DDS	**Function diagram:** 3010
P-Group: Setpoints	**Units group:** SPEED_ROT	**Unit selection:** -
Min	**Max**	**Factory setting**
-210000.000 [1/min]	210000.000 [1/min]	0.000 [1/min]

Description: Sets a value for the fixed speed / velocity setpoint 14.

Dependency: Refer to: p1020, p1021, p1022, p1023, r1024, r1197

p1014[0...n] CO: Fixed velocity setpoint 14 / n_set_fixed 14

SERVO (Lin, Extended setp.)

Can be changed: U, T		**Access level:** 2
Data type: Floating Point	**Data set:** DDS	**Function diagram:** 3010
P-Group: Setpoints	**Units group:** SPEED_LIN_METRIC_P3	**Unit selection:** -
Min	**Max**	**Factory setting**
-1000.000 [m/min]	1000.000 [m/min]	0.000 [m/min]

Description: Sets a value for the fixed speed / velocity setpoint 14.

Dependency: Refer to: p1020, p1021, p1022, p1023, r1024, r1197

p1015[0...n] CO: Fixed speed setpoint 15 / n_set_fixed 15

SERVO (Extended setp.), VECTOR

Can be changed: U, T		**Access level:** 2
Data type: Floating Point	**Data set:** DDS	**Function diagram:** 3010
P-Group: Setpoints	**Units group:** SPEED_ROT	**Unit selection:** -
Min	**Max**	**Factory setting**
-210000.000 [1/min]	210000.000 [1/min]	0.000 [1/min]

Description: Sets a value for the fixed speed / velocity setpoint 15.

Dependency: Refer to: p1020, p1021, p1022, p1023, r1024, r1197

p1015[0...n] CO: Fixed velocity setpoint 15 / n_set_fixed 15

SERVO (Lin, Extended setp.)

Can be changed: U, T		**Access level:** 2
Data type: Floating Point	**Data set:** DDS	**Function diagram:** 3010
P-Group: Setpoints	**Units group:** SPEED_LIN_METRIC_P3	**Unit selection:** -
Min	**Max**	**Factory setting**
-1000.000 [m/min]	1000.000 [m/min]	0.000 [m/min]

Description: Sets a value for the fixed speed / velocity setpoint 15.

Dependency: Refer to: p1020, p1021, p1022, p1023, r1024, r1197

p1020[0...n] BI: Fixed speed setpoint selection Bit 0 / n_set_fixed Bit 0

SERVO (Extended setp.), VECTOR

Can be changed: T		**Access level:** 3
Data type: Unsigned32	**Data set:** CDS	**Function diagram:** 2505
P-Group: Setpoints	**Units group:** -	**Unit selection:** -
Min	**Max**	**Factory setting**
-	-	0

Description: Sets the signal source to select the speed/velocity fixed setpoint.

© Siemens AG, 2005. All rights reserved

Dependency: Selects the required fixed speed setpoint using p1020 ... p1023.
Displays the number of the actual fixed speed setpoint in r1197.
Sets a value for the fixed speed setpoints 1 ... 15 using p1001 ... p1015.
Refer to: p1021, p1022, p1023, r1197
Note: If a fixed speed setpoint has not been selected (p1020 ... p1023 = 0, r1197 = 0), then r1024 = 0 (setpoint = 0).

p1020[0...n] BI: Fixed velocity setpoint selection Bit 0 / n_set_fixed Bit 0

SERVO (Lin, Extended setp.)

Can be changed: T		**Access level:** 3
Data type: Unsigned32	**Data set:** CDS	**Function diagram:** 2505
P-Group: Setpoints	**Units group:** -	**Unit selection:** -
Min	**Max**	**Factory setting**
-	-	0

Description: Sets the signal source to select the speed/velocity fixed setpoint.
Dependency: Selects the required fixed speed setpoint using p1020 ... p1023.
Displays the number of the actual fixed speed setpoint in r1197.
Sets a value for the fixed speed setpoints 1 ... 15 using p1001 ... p1015.
Refer to: p1021, p1022, p1023, r1197
Note: If a fixed speed setpoint has not been selected (p1020 ... p1023 = 0, r1197 = 0), then r1024 = 0 (setpoint = 0).

p1021[0...n] BI: Fixed speed setpoint selection Bit 1 / n_set_fixed Bit 1

SERVO (Extended setp.), VECTOR

Can be changed: T		**Access level:** 3
Data type: Unsigned32	**Data set:** CDS	**Function diagram:** 2505
P-Group: Setpoints	**Units group:** -	**Unit selection:** -
Min	**Max**	**Factory setting**
-	-	0

Description: Sets the signal source to select the speed/velocity fixed setpoint.
Dependency: Selects the required fixed speed setpoint using p1020 ... p1023.
Displays the number of the actual fixed speed setpoint in r1197.
Sets a value for the fixed speed setpoints 1 ... 15 using p1001 ... p1015.
Refer to: p1020, p1022, p1023, r1197
Note: If a fixed speed setpoint has not been selected (p1020 ... p1023 = 0, r1197 = 0), then r1024 = 0 (setpoint = 0).

p1021[0...n] BI: Fixed velocity setpoint selection Bit 1 / n_set_fixed Bit 1

SERVO (Lin, Extended setp.)

Can be changed: T		**Access level:** 3
Data type: Unsigned32	**Data set:** CDS	**Function diagram:** 2505
P-Group: Setpoints	**Units group:** -	**Unit selection:** -
Min	**Max**	**Factory setting**
-	-	0

Description: Sets the signal source to select the speed/velocity fixed setpoint.
Dependency: Selects the required fixed speed setpoint using p1020 ... p1023.
Displays the number of the actual fixed speed setpoint in r1197.
Sets a value for the fixed speed setpoints 1 ... 15 using p1001 ... p1015.
Refer to: p1020, p1022, p1023, r1197
Note: If a fixed speed setpoint has not been selected (p1020 ... p1023 = 0, r1197 = 0), then r1024 = 0 (setpoint = 0).

© Siemens AG, 2005. All rights reserved

p1022[0...n] BI: Fixed speed setpoint selection Bit 2 / n_set_fixed Bit 2

SERVO (Extended setp.), VECTOR

Can be changed: T		**Access level:** 3
Data type: Unsigned32	**Data set:** CDS	**Function diagram:** 2505
P-Group: Setpoints	**Units group:** -	**Unit selection:** -
Min	**Max**	**Factory setting**
-	-	0

Description: Sets the signal source to select the speed/velocity fixed setpoint.

Dependency: Selects the required fixed speed setpoint using p1020 ... p1023.
Displays the number of the actual fixed speed setpoint in r1197.
Sets a value for the fixed speed setpoints 1 ... 15 using p1001 ... p1015.
Refer to: p1020, p1021, p1023, r1197

Note: If a fixed speed setpoint has not been selected (p1020 ... p1023 = 0, r1197 = 0), then r1024 = 0 (setpoint = 0).

p1022[0...n] BI: Fixed velocity setpoint selection Bit 2 / n_set_fixed Bit 2

SERVO (Lin, Extended setp.)

Can be changed: T		**Access level:** 3
Data type: Unsigned32	**Data set:** CDS	**Function diagram:** 2505
P-Group: Setpoints	**Units group:** -	**Unit selection:** -
Min	**Max**	**Factory setting**
-	-	0

Description: Sets the signal source to select the speed/velocity fixed setpoint.

Dependency: Selects the required fixed speed setpoint using p1020 ... p1023.
Displays the number of the actual fixed speed setpoint in r1197.
Sets a value for the fixed speed setpoints 1 ... 15 using p1001 ... p1015.
Refer to: p1020, p1021, p1023, r1197

Note: If a fixed speed setpoint has not been selected (p1020 ... p1023 = 0, r1197 = 0), then r1024 = 0 (setpoint = 0).

p1023[0...n] BI: Fixed speed setpoint selection Bit 3 / n_set_fixed Bit 3

SERVO (Extended setp.), VECTOR

Can be changed: T		**Access level:** 3
Data type: Unsigned32	**Data set:** CDS	**Function diagram:** 2505
P-Group: Setpoints	**Units group:** -	**Unit selection:** -
Min	**Max**	**Factory setting**
-	-	0

Description: Sets the signal source to select the speed/velocity fixed setpoint.

Dependency: Selects the required fixed speed setpoint using p1020 ... p1023.
Displays the number of the actual fixed speed setpoint in r1197.
Sets a value for the fixed speed setpoints 1 ... 15 using p1001 ... p1015.
Refer to: p1020, p1021, p1022, r1197

Note: If a fixed speed setpoint has not been selected (p1020 ... p1023 = 0, r1197 = 0), then r1024 = 0 (setpoint = 0).

p1023[0...n] BI: Fixed velocity setpoint selection Bit 3 / n_set_fixed Bit 3

SERVO (Lin, Extended setp.)

Can be changed: T		**Access level:** 3
Data type: Unsigned32	**Data set:** CDS	**Function diagram:** 2505
P-Group: Setpoints	**Units group:** -	**Unit selection:** -
Min	**Max**	**Factory setting**
-	-	0

Description: Sets the signal source to select the speed/velocity fixed setpoint.

© Siemens AG, 2005. All rights reserved

Dependency: Selects the required fixed speed setpoint using p1020 ... p1023.
Displays the number of the actual fixed speed setpoint in r1197.
Sets a value for the fixed speed setpoints 1 ... 15 using p1001 ... p1015.
Refer to: p1020, p1021, p1022, r1197

Note: If a fixed speed setpoint has not been selected (p1020 ... p1023 = 0, r1197 = 0), then r1024 = 0 (setpoint = 0).

r1024 CO: Fixed speed setpoint effective / n_set_fixed eff

SERVO (Extended setp.), VECTOR

Can be changed: -		**Access level:** 3
Data type: Floating Point	**Data set:** -	**Function diagram:** 1550, 3010
P-Group: Setpoints	**Units group:** SPEED_ROT	**Unit selection:** -
Min	**Max**	**Factory setting**
- [1/min]	- [1/min]	- [1/min]

Description: Displays the selected and effective fixed speed/velocity setpoint.
This setpoint is the output value for the fixed speed/velocity setpoints and must be appropriately interconnected (e.g. with the main setpoint).

Recommendation: Interconnect the signal with main setpoint (p1070).

Dependency: Selects the required fixed speed setpoint using p1020 ... p1023.
Displays the number of the actual fixed speed setpoint in r1197.
Sets a value for the fixed speed setpoints 1 ... 15 using p1001 ... p1015.
Refer to: p1070, r1197

Note: If a fixed speed setpoint has not been selected (p1020 ... p1023 = 0, r1197 = 0), then r1024 = 0 (setpoint = 0).

r1024 CO: Fixed velocity setpoint effective / n_set_fixed eff

SERVO (Lin, Extended setp.)

Can be changed: -		**Access level:** 3
Data type: Floating Point	**Data set:** -	**Function diagram:** 1550, 3010
P-Group: Setpoints	**Units group:** SPEED_LIN_METRIC_P3	**Unit selection:** -
Min	**Max**	**Factory setting**
- [m/min]	- [m/min]	- [m/min]

Description: Displays the selected and effective fixed speed/velocity setpoint.
This setpoint is the output value for the fixed speed/velocity setpoints and must be appropriately interconnected (e.g. with the main setpoint).

Recommendation: Interconnect the signal with main setpoint (p1070).

Dependency: Selects the required fixed speed setpoint using p1020 ... p1023.
Displays the number of the actual fixed speed setpoint in r1197.
Sets a value for the fixed speed setpoints 1 ... 15 using p1001 ... p1015.
Refer to: p1070, r1197

Note: If a fixed speed setpoint has not been selected (p1020 ... p1023 = 0, r1197 = 0), then r1024 = 0 (setpoint = 0).

p1030[0...n] Motorized potentiometer, configuration / Mop configuration

SERVO (Extended setp.), VECTOR

Can be changed: U, T		**Access level:** 3
Data type: Unsigned16	**Data set:** DDS	**Function diagram:** 3020
P-Group: Closed-loop control	**Units group:** -	**Unit selection:** -
Min	**Max**	**Factory setting**
0000 bin	1111 bin	0110 bin

Description: Sets the configuration for the motorized potentiometer.

© Siemens AG, 2005. All rights reserved

Bit field:	Bit	Signal name	0 signal	1 signal	FP
	00	Data save active	No	Yes	-
	01	Automatic mode, ramp-function generator active	No	Yes	-
	02	Initial rounding-off active	No	Yes	-
	03	Save in NVRAM active	No	Yes	-

Note:

Re bit 00:

0: The setpoint for the motorized potentiometer is not saved and after ON is entered using p1040.

1: The setpoint for the motorized potentiometer is saved after OFF and after ON set to the saved value. In order to save in a non-volatile fashion, bit 03 should be set to 1.

Re bit 01:

0: Without ramp-function generator in the automatic mode (ramp-up/ramp-down time = 0).

1: With ramp-function generator in the automatic mode.

For manual operation (0 signal via BI: p1041) the ramp-function generator is always active.

Re bit 02:

0: Without initial rounding-off

1: With initial rounding-off. The selected ramp-up/down time is correspondingly exceeded. The initial rounding-off is a sensitive way of specifying small changes (progressive reaction when keys are pressed).

The jerk for the initial rounding-off is independent of the ramp-up time and only depends on the selected maximum speed (p1082). It is calculated as follows:

r = 0.01 % * p1082 [1/s] / 0.13^2 [s^2]

The jerk acts up until the maximum acceleration is reached (a_max = p1082 [1/s] / p1047 [s]), and then the drive continues to run linearly with a constant rate of acceleration. The higher the maximum acceleration (the lower that p1047 is), the longer the ramp-up time increases with respect to the set ramp-up time.

Re bit 03:

0: Non-volatile data save de-activated.

1: The setpoint for the motorized potentiometer is saved in a non-volatile fashion (for bit 00 = 1).

The following prerequisites must be fulfilled in order to be able to save the setpoint in a non-volatile fashion:

- Firmware with V2.3 or higher.
- Control Unit 320 (CU320) with hardware version C or higher (module with NVRAM).

p1035[0...n] BI: Motorized potentiometer, setpoint, raise / Mop raise

SERVO (Extended setp.), VECTOR

Can be changed: T		**Access level:** 3
Data type: Unsigned32	**Data set:** CDS	**Function diagram:** 2442, 2505
P-Group: Setpoints	**Units group:** -	**Unit selection:** -
Min	**Max**	**Factory setting**
-	-	0

Description: Sets the signal source to increase the setpoint for the motorized potentiometer

Dependency: Refer to: p1036

p1035 BI: Enable zero marks / Enable ZM

TM41

Can be changed: T		**Access level:** 3
Data type: Unsigned32	**Data set:** -	**Function diagram:** -
P-Group: Setpoints	**Units group:** -	**Unit selection:** -
Min	**Max**	**Factory setting**
-	-	0

Description: Sets the signal source to enable the zero marks.

© Siemens AG, 2005. All rights reserved

p1036[0...n] BI: Motorized potentiometer, lower setpoint / Mop lower

SERVO (Extended setp.), VECTOR

Can be changed: T		**Access level:** 3
Data type: Unsigned32	**Data set:** CDS	**Function diagram:** 2442, 2505
P-Group: Setpoints	**Units group:** -	**Unit selection:** -
Min	**Max**	**Factory setting**
-	-	0

Description: Sets the signal source to reduce the setpoint for the motorized potentiometer.
Dependency: Refer to: p1035

p1037[0...n] Motorized potentiometer, maximum speed / Mop n_max

SERVO (Extended setp.), VECTOR

Can be changed: U, T		**Access level:** 2
Data type: Floating Point	**Data set:** DDS	**Function diagram:** 3020
P-Group: Setpoints	**Units group:** SPEED_ROT	**Unit selection:** -
Min	**Max**	**Factory setting**
-210000.000 [1/min]	210000.000 [1/min]	0.000 [1/min]

Description: Sets the maximum speed/velocity for the motorized potentiometer.
Note: This parameter is automatically pre-assigned in the commissioning phase.
The setpoint output from the motorized potentiometer is limited to this value.

p1037[0...n] Motorized potentiometer, maximum velocity / Mop n_max

SERVO (Lin, Extended setp.)

Can be changed: U, T		**Access level:** 2
Data type: Floating Point	**Data set:** DDS	**Function diagram:** 3020
P-Group: Setpoints	**Units group:** SPEED_LIN_METRIC_P3	**Unit selection:** -
Min	**Max**	**Factory setting**
-1000.000 [m/min]	1000.000 [m/min]	0.000 [m/min]

Description: Sets the maximum speed/velocity for the motorized potentiometer.
Note: This parameter is automatically pre-assigned in the commissioning phase.
The setpoint output from the motorized potentiometer is limited to this value.

p1038[0...n] Motorized potentiometer, minimum speed / Mop n_min

SERVO (Extended setp.), VECTOR

Can be changed: U, T		**Access level:** 2
Data type: Floating Point	**Data set:** DDS	**Function diagram:** 3020
P-Group: Setpoints	**Units group:** SPEED_ROT	**Unit selection:** -
Min	**Max**	**Factory setting**
-210000.000 [1/min]	210000.000 [1/min]	0.000 [1/min]

Description: Sets the minimum speed/velocity for the motorized potentiometer.
Note: This parameter is automatically pre-assigned in the commissioning phase.
The setpoint output from the motorized potentiometer is limited to this value.

p1038[0...n] Motorized potentiometer, minimum velocity / Mop n_min

SERVO (Lin, Extended setp.)

Can be changed: U, T		**Access level:** 2
Data type: Floating Point	**Data set:** DDS	**Function diagram:** 3020
P-Group: Setpoints	**Units group:** SPEED_LIN_METRIC_P3	**Unit selection:** -
Min	**Max**	**Factory setting**
-1000.000 [m/min]	1000.000 [m/min]	0.000 [m/min]

Description: Sets the minimum speed/velocity for the motorized potentiometer.

© Siemens AG, 2005. All rights reserved

Note: This parameter is automatically pre-assigned in the commissioning phase.
The setpoint output from the motorized potentiometer is limited to this value.

p1039[0...n] BI: Motorized potentiometer, inversion / Mop inversion

SERVO (Extended setp.), VECTOR

Can be changed: T		**Access level:** 3
Data type: Unsigned32	**Data set:** CDS	**Function diagram:** 3020
P-Group: Setpoints	**Units group:** -	**Unit selection:** -
Min	**Max**	**Factory setting**
-	-	0

Description: Sets the signal source to invert the maximum or minimum speed/velocity for the motorized potentiometer.
Dependency: Refer to: p1037, p1038
Note: The inversion is only active during "motorized potentiometer raise" or "motorized potentiometer lower".

p1040[0...n] Motorized potentiometer, starting value / Mop start value

SERVO (Extended setp.), VECTOR

Can be changed: U, T		**Access level:** 2
Data type: Floating Point	**Data set:** DDS	**Function diagram:** 3020
P-Group: Setpoints	**Units group:** SPEED_ROT	**Unit selection:** -
Min	**Max**	**Factory setting**
-210000.000 [1/min]	210000.000 [1/min]	0.000 [1/min]

Description: Sets the starting value for the motorized potentiometer. This starting value becomes effective after the drive has been powered-up.
Dependency: Only effective if p1030.0 = 0.
Refer to: p1030

p1040[0...n] Motorized potentiometer, starting value / Mop start value

SERVO (Lin, Extended setp.)

Can be changed: U, T		**Access level:** 2
Data type: Floating Point	**Data set:** DDS	**Function diagram:** 3020
P-Group: Setpoints	**Units group:** SPEED_LIN_METRIC_P3	**Unit selection:** -
Min	**Max**	**Factory setting**
-1000.000 [m/min]	1000.000 [m/min]	0.000 [m/min]

Description: Sets the starting value for the motorized potentiometer. This starting value becomes effective after the drive has been powered-up.
Dependency: Only effective if p1030.0 = 0.
Refer to: p1030

p1041[0...n] BI: Motorized potentiometer, manual/automatic / Mop manual/auto

SERVO (Extended setp.), VECTOR

Can be changed: T		**Access level:** 3
Data type: Unsigned32	**Data set:** CDS	**Function diagram:** 3020
P-Group: Setpoints	**Units group:** -	**Unit selection:** -
Min	**Max**	**Factory setting**
-	-	0

Description: Sets the signal source to change over from manual to automatic when using a motorized potentiometer.
In the manual mode, the setpoint is changed using two signals - raise and lower. In the automatic mode, the setpoint must be interconnected via a connector input.
Dependency: Refer to: p1030, p1035, p1036, p1042
Note: The effectiveness of the internal ramp-function generator can be set in automatic mode.

© Siemens AG, 2005. All rights reserved

p1042[0...n] CI: Motorized potentiometer, automatic setpoint / Mop auto setpoint

SERVO (Extended setp.), VECTOR

Can be changed: T		**Access level:** 3
Data type: Unsigned32	**Data set:** CDS	**Function diagram:** 3020
P-Group: Setpoints	**Units group:** -	**Unit selection:** -
Min	**Max**	**Factory setting**
-	-	0

Description: Sets the signal source for the setpoint of the motorized potentiometer in the automatic mode.
Dependency: Refer to: p1041

p1043[0...n] BI: Motorized potentiometer, accept setpoint / Mop accept set val

SERVO (Extended setp.), VECTOR

Can be changed: T		**Access level:** 3
Data type: Unsigned32	**Data set:** CDS	**Function diagram:** 3020
P-Group: Setpoints	**Units group:** -	**Unit selection:** -
Min	**Max**	**Factory setting**
-	-	0

Description: Sets the signal source for the setting command to accept the setting value for the motorized potentiometer.
Dependency: Refer to: p1044

p1044[0...n] CI: Motorized potentiometer, setting value / Mop setting value

SERVO (Extended setp.), VECTOR

Can be changed: T		**Access level:** 3
Data type: Unsigned32	**Data set:** CDS	**Function diagram:** 3020
P-Group: Setpoints	**Units group:** -	**Unit selection:** -
Min	**Max**	**Factory setting**
-	-	0

Description: Sets the signal source for the setting value for the motorized potentiometer.
Dependency: Refer to: p1043
Note: The value becomes effective for a 0/1 edge of the setting command.

r1045 CO: Mot. potentiometer, speed setp. in front of ramp-fct. gen. / Mop n_set bef. RFG

SERVO (Extended setp.), VECTOR

Can be changed: -		**Access level:** 3
Data type: Floating Point	**Data set:** -	**Function diagram:** 3020
P-Group: Setpoints	**Units group:** SPEED_ROT	**Unit selection:** -
Min	**Max**	**Factory setting**
- [1/min]	- [1/min]	- [1/min]

Description: Sets the effective setpoint in front of the internal motorized potentiometer ramp-function generator.

r1045 CO: Mot. potentiom.,velocity setp. in front of ramp-fct. gen. / Mop n_set bef. RFG

SERVO (Lin, Extended setp.)

Can be changed: -		**Access level:** 3
Data type: Floating Point	**Data set:** -	**Function diagram:** 3020
P-Group: Setpoints	**Units group:** SPEED_LIN_METRIC_P3	**Unit selection:** -
Min	**Max**	**Factory setting**
- [m/min]	- [m/min]	- [m/min]

Description: Sets the effective setpoint in front of the internal motorized potentiometer ramp-function generator.

© Siemens AG, 2005. All rights reserved

p1047[0...n] Motorized potentiometer, ramp-up time / Mop ramp-up time

SERVO (Extended setp.), VECTOR

Can be changed: U, T		**Access level:** 2
Data type: Floating Point	**Data set:** DDS	**Function diagram:** 3020
P-Group: Setpoints	**Units group:** TIME	**Unit selection:** -
Min	**Max**	**Factory setting**
0.000 [s]	1000.000 [s]	10.000 [s]

Description: Sets the ramp-up time for the internal ramp-function generator for the motorized potentiometer.
The setpoint is changed from the zero up to the speed/velocity limit (p1082) within this time (if no initial rounding-off has been activated).

Dependency: Refer to: p1030, p1048, p1082

Note: When the initial rounding-off is activated (p1030.2) the ramp-up time is correspondingly extended.

p1048[0...n] Motorized potentiometer, ramp-down time / Mop ramp-down time

SERVO (Extended setp.), VECTOR

Can be changed: U, T		**Access level:** 2
Data type: Floating Point	**Data set:** DDS	**Function diagram:** 3020
P-Group: Setpoints	**Units group:** TIME	**Unit selection:** -
Min	**Max**	**Factory setting**
0.000 [s]	1000.000 [s]	10.000 [s]

Description: Sets the ramp-down time for the internal ramp-function generator for the motorized potentiometer.
The setpoint is changed from the speed/velocity limit (p1082) to zero within this time (if no initial rounding-off has been activated).

Dependency: Refer to: p1030, p1047, p1082

Note: The deceleration time is extended corresponding to the activated initial rounding-off (p1030.2).

r1050 CO: Motor. potentiometer, setpoint after the ramp-function generator / Mop setp after RFG

SERVO (Extended setp.), VECTOR

Can be changed: -		**Access level:** 3
Data type: Floating Point	**Data set:** -	**Function diagram:** 1550, 3020
P-Group: Setpoints	**Units group:** SPEED_ROT	**Unit selection:** -
Min	**Max**	**Factory setting**
- [1/min]	- [1/min]	- [1/min]

Description: Sets the effective setpoint after the internal motorized potentiometer ramp-function generator.
This setpoint is the output value of the motorized potentiometer and must be appropriately interconnected onwards (e.g. with the main setpoint).

Recommendation: Interconnect the signal with main setpoint (p1070).

Dependency: Refer to: p1070

Note: For operation "with ramp-function generator", after AUS1, AUS2, AUS3 or for a 0 signal via BI: p0852 (inhibit operation, cancel pulses), the ramp-function generator output (r1050) is set to the starting value (configuration via p1030.0).

© Siemens AG, 2005. All rights reserved

r1050 CO: Motor. potentiometer, setpoint after the ramp-function generator / Mop setp after RFG

SERVO (Lin, Extended setp.)

Can be changed: -		**Access level:** 3
Data type: Floating Point	**Data set:** -	**Function diagram:** 1550, 3020
P-Group: Setpoints	**Units group:** SPEED_LIN_METRIC_P3	**Unit selection:** -
Min	**Max**	**Factory setting**
- [m/min]	- [m/min]	- [m/min]

Description: Sets the effective setpoint after the internal motorized potentiometer ramp-function generator.
This setpoint is the output value of the motorized potentiometer and must be appropriately interconnected onwards (e.g. with the main setpoint).

Recommendation: Interconnect the signal with main setpoint (p1070).

Dependency: Refer to: p1070

Note: For operation "with ramp-function generator", after AUS1, AUS2, AUS3 or for a 0 signal via BI: p0852 (inhibit operation, cancel pulses), the ramp-function generator output (r1050) is set to the starting value (configuration via p1030.0).

p1055[0...n] BI: Jog bit 0 / Jog bit 0

SERVO, VECTOR

Can be changed: T		**Access level:** 3
Data type: Unsigned32	**Data set:** CDS	**Function diagram:** 2501, 3030
P-Group: Setpoints	**Units group:** -	**Unit selection:** -
Min	**Max**	**Factory setting**
-	-	0

Description: Sets the signal source for jog 1.

Recommendation: When the signal source is set, this does not trigger a response - but only a signal change of the source.

Dependency: Refer to: p1058

p1056[0...n] BI: Jog bit 1 / Jog bit 1

SERVO, VECTOR

Can be changed: T		**Access level:** 3
Data type: Unsigned32	**Data set:** CDS	**Function diagram:** 2501, 3030
P-Group: Setpoints	**Units group:** -	**Unit selection:** -
Min	**Max**	**Factory setting**
-	-	0

Description: Sets the signal source for jog 2.

Recommendation: When the signal source is set, this does not trigger a response - but only a signal change of the source.

Dependency: Refer to: p1059

p1058[0...n] Jog 1 speed setpoint / Jog 1 n_set

SERVO (Extended setp.), VECTOR

Can be changed: T		**Access level:** 2
Data type: Floating Point	**Data set:** DDS	**Function diagram:** 3030
P-Group: Setpoints	**Units group:** SPEED_ROT	**Unit selection:** -
Min	**Max**	**Factory setting**
-210000.000 [1/min]	210000.000 [1/min]	0.000 [1/min]

Description: Sets the speed/velocity for jog 1. Jogging is level-triggered and allows the motor to be incrementally moved.

Dependency: Refer to: p1055, p1056

© Siemens AG, 2005. All rights reserved

p1058[0...n] Jog 1 velocity setpoint / Jog 1 n_set

SERVO (Lin, Extended setp.)

Can be changed: T		**Access level:** 2
Data type: Floating Point	**Data set:** DDS	**Function diagram:** 3030
P-Group: Setpoints	**Units group:** SPEED_LIN_METRIC_P3	**Unit selection:** -
Min	**Max**	**Factory setting**
-1000.000 [m/min]	1000.000 [m/min]	0.000 [m/min]

Description: Sets the speed/velocity for jog 1. Jogging is level-triggered and allows the motor to be incrementally moved.
Dependency: Refer to: p1055, p1056

p1059[0...n] Jog 2 speed setpoint / Jog 2 n_set

SERVO (Extended setp.), VECTOR

Can be changed: T		**Access level:** 2
Data type: Floating Point	**Data set:** DDS	**Function diagram:** 3030
P-Group: Setpoints	**Units group:** SPEED_ROT	**Unit selection:** -
Min	**Max**	**Factory setting**
-210000.000 [1/min]	210000.000 [1/min]	0.000 [1/min]

Description: Sets the speed/velocity for jog 2. Jogging is level-triggered and allows the motor to be incrementally moved.
Dependency: Refer to: p1055, p1056

p1059[0...n] Jog 2 velocity setpoint / Jog 2 n_set

SERVO (Lin, Extended setp.)

Can be changed: T		**Access level:** 2
Data type: Floating Point	**Data set:** DDS	**Function diagram:** 3030
P-Group: Setpoints	**Units group:** SPEED_LIN_METRIC_P3	**Unit selection:** -
Min	**Max**	**Factory setting**
-1000.000 [m/min]	1000.000 [m/min]	0.000 [m/min]

Description: Sets the speed/velocity for jog 2. Jogging is level-triggered and allows the motor to be incrementally moved.
Dependency: Refer to: p1055, p1056

p1063[0...n] Speed limit, setpoint channel / n_limit setp.

SERVO (Extended setp.), VECTOR

Can be changed: C2(1), U, T		**Access level:** 1
Data type: Floating Point	**Data set:** DDS	**Function diagram:** 3040
P-Group: Setpoints	**Units group:** SPEED_ROT	**Unit selection:** -
Min	**Max**	**Factory setting**
0.000 [1/min]	210000.000 [1/min]	210000.000 [1/min]

Description: Sets the speed limit/velocity limit effective in the setpoint channel.
Dependency: Refer to: p1082, p1083, p1085, p1086, p1088

p1063[0...n] Velocity limit, setpoint channel / v_limit setp.

SERVO (Lin, Extended setp.)

Can be changed: C2(1), U, T		**Access level:** 1
Data type: Floating Point	**Data set:** DDS	**Function diagram:** 3040
P-Group: Setpoints	**Units group:** SPEED_LIN_METRIC_P3	**Unit selection:** -
Min	**Max**	**Factory setting**
0.000 [m/min]	1000.000 [m/min]	1000.000 [m/min]

Description: Sets the speed limit/velocity limit effective in the setpoint channel.
Dependency: Refer to: p1082, p1083, p1085, p1086, p1088

© Siemens AG, 2005. All rights reserved

p1070[0...n] CI: Main setpoint / Main setpoint

SERVO (Extended setp.), VECTOR

Can be changed: T		**Access level:** 3
Data type: Unsigned32	**Data set:** CDS	**Function diagram:** 1550, 3030
P-Group: Setpoints	**Units group:** -	**Unit selection:** -
Min	**Max**	**Factory setting**
-	-	1024[0]

Description: Sets the signal source for the main setpoint.
Examples:
r1024: Fixed speed setpoint effective
r1050: Motor. potentiometer, setpoint after the ramp-function generator

Dependency: Refer to: p1071, r1073, r1078

p1071[0...n] CI: Main setpoint scaling / Main setpt scal

SERVO (Extended setp.), VECTOR

Can be changed: T		**Access level:** 3
Data type: Unsigned32	**Data set:** CDS	**Function diagram:** 3030
P-Group: Setpoints	**Units group:** -	**Unit selection:** -
Min	**Max**	**Factory setting**
-	-	1

Description: Sets the signal source for scaling the main setpoint.

r1073 CO: Main setpoint effective / Main setpoint eff

SERVO (Extended setp.), VECTOR

Can be changed: -		**Access level:** 3
Data type: Floating Point	**Data set:** -	**Function diagram:** 3030
P-Group: Setpoints	**Units group:** SPEED_ROT	**Unit selection:** -
Min	**Max**	**Factory setting**
- [1/min]	- [1/min]	- [1/min]

Description: Displays the effective main setpoint. The value shown is the main setpoint after scaling.

r1073 CO: Main setpoint effective / Main setpoint eff

SERVO (Lin, Extended setp.)

Can be changed: -		**Access level:** 3
Data type: Floating Point	**Data set:** -	**Function diagram:** 3030
P-Group: Setpoints	**Units group:** SPEED_LIN_METRIC_P3	**Unit selection:** -
Min	**Max**	**Factory setting**
- [m/min]	- [m/min]	- [m/min]

Description: Displays the effective main setpoint. The value shown is the main setpoint after scaling.

p1075[0...n] CI: Suppl setpoint / Suppl setpoint

SERVO (Extended setp.), VECTOR

Can be changed: T		**Access level:** 3
Data type: Unsigned32	**Data set:** CDS	**Function diagram:** 1550, 3030
P-Group: Setpoints	**Units group:** -	**Unit selection:** -
Min	**Max**	**Factory setting**
-	-	0

Description: Sets the signal source for the supplementary setpoint.

Dependency: Refer to: p1076, r1077, r1078

© Siemens AG, 2005. All rights reserved

p1076[0...n] **CI: Supplementary setpoint scaling / Suppl setpt scal**

SERVO (Extended setp.), VECTOR

Can be changed: T		**Access level:** 3
Data type: Unsigned32	**Data set:** CDS	**Function diagram:** 3030
P-Group: Setpoints	**Units group:** -	**Unit selection:** -
Min	**Max**	**Factory setting**
-	-	1

Description: Sets the signal source for scaling the supplementary setpoint.

r1077 **CO: Supplementary setpoint effective / Suppl setpoint eff**

SERVO (Extended setp.), VECTOR

Can be changed: -		**Access level:** 3
Data type: Floating Point	**Data set:** -	**Function diagram:** 3030
P-Group: Setpoints	**Units group:** SPEED_ROT	**Unit selection:** -
Min	**Max**	**Factory setting**
- [1/min]	- [1/min]	- [1/min]

Description: Displays the effective supplementary setpoint. The value shown is the additional setpoint after scaling.

r1077 **CO: Supplementary setpoint effective / Suppl setpoint eff**

SERVO (Lin, Extended setp.)

Can be changed: -		**Access level:** 3
Data type: Floating Point	**Data set:** -	**Function diagram:** 3030
P-Group: Setpoints	**Units group:** SPEED_LIN_METRIC_P3	**Unit selection:** -
Min	**Max**	**Factory setting**
- [m/min]	- [m/min]	- [m/min]

Description: Displays the effective supplementary setpoint. The value shown is the additional setpoint after scaling.

r1078 **CO: Total setpoint effective / Total setpoint eff**

SERVO (Extended setp.), VECTOR

Can be changed: -		**Access level:** 3
Data type: Floating Point	**Data set:** -	**Function diagram:** 3030
P-Group: Setpoints	**Units group:** SPEED_ROT	**Unit selection:** -
Min	**Max**	**Factory setting**
- [1/min]	- [1/min]	- [1/min]

Description: Displays the total effective setpoint. The value indicates the sum of the effective main setpoint and supplementary setpoint.

r1078 **CO: Total setpoint effective / Total setpoint eff**

SERVO (Lin, Extended setp.)

Can be changed: -		**Access level:** 3
Data type: Floating Point	**Data set:** -	**Function diagram:** 3030
P-Group: Setpoints	**Units group:** SPEED_LIN_METRIC_P3	**Unit selection:** -
Min	**Max**	**Factory setting**
- [m/min]	- [m/min]	- [m/min]

Description: Displays the total effective setpoint. The value indicates the sum of the effective main setpoint and supplementary setpoint.

© Siemens AG, 2005. All rights reserved

p1080[0...n] Minimum speed / Minimum speed

SERVO (Extended setp.), VECTOR

Can be changed: C2(1), T		**Access level:** 1
Data type: Floating Point	**Data set:** DDS	**Function diagram:** 3050
P-Group: Setpoints	**Units group:** SPEED_ROT	**Unit selection:** -
Min	**Max**	**Factory setting**
0.000 [1/min]	19500.000 [1/min]	0.000 [1/min]

Description: Sets the lowest possible speed/velocity. This value is not fallen below in operation.

Note: The parameter value applies for both motor directions of rotation.
In exception cases, the motor can operate below this value (e.g. when reversing).

p1080[0...n] Minimum velocity / Minimum speed

SERVO (Lin, Extended setp.)

Can be changed: C2(1), T		**Access level:** 1
Data type: Floating Point	**Data set:** DDS	**Function diagram:** 3050
P-Group: Setpoints	**Units group:** SPEED_LIN_METRIC_P3	**Unit selection:** -
Min	**Max**	**Factory setting**
0.000 [m/min]	1000.000 [m/min]	0.000 [m/min]

Description: Sets the lowest possible speed/velocity. This value is not fallen below in operation.

Note: The parameter value applies for both motor directions of rotation.
In exception cases, the motor can operate below this value (e.g. when reversing).

p1082[0...n] Maximum speed / Maximum speed

SERVO, VECTOR

Can be changed: C2(1), T		**Access level:** 1
Data type: Floating Point	**Data set:** DDS	**Function diagram:** 3050, 3060, 3070, 5300
P-Group: Setpoints	**Units group:** SPEED_ROT	**Unit selection:** -
Min	**Max**	**Factory setting**
0.000 [1/min]	210000.000 [1/min]	1500.000 [1/min]

Description: Sets the highest possible speed/velocity.
The value in p1082 is calculated, during the commissioning phase, dependent on the motor and drive unit and can only be equal to or less than the value in p0322 (maximum motor speed).

Dependency: If a sinusoidal filter (p0230 = 3) is parameterized as output filter, then the maximum speed is limited corresponding to the maximum permissible filter output frequency (refer to the filter data sheet).
Refer to: p0115, p0230, r0313, p0322, r0336

Note: The parameter applies for both motor directions.

p1082[0...n] Maximum velocity / Maximum speed

SERVO (Lin)

Can be changed: C2(1), T		**Access level:** 1
Data type: Floating Point	**Data set:** DDS	**Function diagram:** 3050, 3060, 3070, 5300
P-Group: Setpoints	**Units group:** SPEED_LIN_METRIC_P3	**Unit selection:** -
Min	**Max**	**Factory setting**
0.000 [m/min]	1000.000 [m/min]	1000.000 [m/min]

Description: Sets the highest possible speed/velocity.
The value in p1082 is calculated, during the commissioning phase, dependent on the motor and drive unit and can only be equal to or less than the value in p0322 (maximum motor speed).

Dependency: If a sinusoidal filter (p0230 = 3) is parameterized as output filter, then the maximum speed is limited corresponding to the maximum permissible filter output frequency (refer to the filter data sheet).
Refer to: p0115, p0230, r0313, p0322, r0336

Note: The parameter applies for both motor directions.

© Siemens AG, 2005. All rights reserved

p1083[0...n] CO: Speed limit in positive direction of rotation / n_limit pos

SERVO, VECTOR

Can be changed: U, T		**Access level:** 2
Data type: Floating Point	**Data set:** DDS	**Function diagram:** 3050
P-Group: Setpoints	**Units group:** SPEED_ROT	**Unit selection:** -
Min	**Max**	**Factory setting**
0.000 [1/min]	210000.000 [1/min]	210000.000 [1/min]

Description: Sets the maximum speed/velocity for the positive direction.

p1083[0...n] CO: Velocity limit, positive direction / n_limit pos

SERVO (Lin)

Can be changed: U, T		**Access level:** 2
Data type: Floating Point	**Data set:** DDS	**Function diagram:** 3050
P-Group: Setpoints	**Units group:** SPEED_LIN_METRIC_P3	**Unit selection:** -
Min	**Max**	**Factory setting**
0.000 [m/min]	1000.000 [m/min]	1000.000 [m/min]

Description: Sets the maximum speed/velocity for the positive direction.

r1084 Speed limit positive effective / n_limit pos eff

SERVO, VECTOR

Can be changed: -		**Access level:** 3
Data type: Floating Point	**Data set:** -	**Function diagram:** 3050, 5030, 5210, 6640, 8010
P-Group: Setpoints	**Units group:** SPEED_ROT	**Unit selection:** -
Min	**Max**	**Factory setting**
- [1/min]	- [1/min]	- [1/min]

Description: Displays the effective positive speed/velocity limit.

r1084 Velocity limit positive effective / n_limit pos eff

SERVO (Lin)

Can be changed: -		**Access level:** 3
Data type: Floating Point	**Data set:** -	**Function diagram:** 3050, 5030, 5210, 6640, 8010
P-Group: Setpoints	**Units group:** SPEED_LIN_METRIC_P3	**Unit selection:** -
Min	**Max**	**Factory setting**
- [m/min]	- [m/min]	- [m/min]

Description: Displays the effective positive speed/velocity limit.

p1085[0...n] CI: Speed limit in positive direction of rotation / n_limit pos

SERVO (Extended setp.), VECTOR

Can be changed: T		**Access level:** 3
Data type: Unsigned32	**Data set:** CDS	**Function diagram:** 3050
P-Group: Setpoints	**Units group:** -	**Unit selection:** -
Min	**Max**	**Factory setting**
-	-	1083[0]

Description: Sets the signal source for the speed/velocity limit of the positive direction.

© Siemens AG, 2005. All rights reserved

p1085[0...n] CI: Velocity limit, positive direction / n_limit pos

SERVO (Lin, Extended setp.)

Can be changed: T		**Access level:** 3
Data type: Unsigned32	**Data set:** CDS	**Function diagram:** 3050
P-Group: Setpoints	**Units group:** -	**Unit selection:** -
Min	**Max**	**Factory setting**
-	-	1083[0]

Description: Sets the signal source for the speed/velocity limit of the positive direction.

p1086[0...n] CO: Speed limit negative direction of rotation / n_limit neg

SERVO, VECTOR

Can be changed: U, T		**Access level:** 2
Data type: Floating Point	**Data set:** DDS	**Function diagram:** 3050
P-Group: Setpoints	**Units group:** SPEED_ROT	**Unit selection:** -
Min	**Max**	**Factory setting**
-210000.000 [1/min]	0.000 [1/min]	-210000.000 [1/min]

Description: Sets the speed/velocity limit for the negative direction (of rotation).

p1086[0...n] CO: Velocity limit, negative direction / n_limit neg

SERVO (Lin)

Can be changed: U, T		**Access level:** 2
Data type: Floating Point	**Data set:** DDS	**Function diagram:** 3050
P-Group: Setpoints	**Units group:** SPEED_LIN_METRIC_P3	**Unit selection:** -
Min	**Max**	**Factory setting**
-1000.000 [m/min]	0.000 [m/min]	-1000.000 [m/min]

Description: Sets the speed/velocity limit for the negative direction (of rotation).

r1087 Speed limit negative effective / n_limit neg eff

SERVO, VECTOR

Can be changed: -		**Access level:** 3
Data type: Floating Point	**Data set:** -	**Function diagram:** 3050, 5030, 5210, 6640, 8010
P-Group: Setpoints	**Units group:** SPEED_ROT	**Unit selection:** -
Min	**Max**	**Factory setting**
- [1/min]	- [1/min]	- [1/min]

Description: Displays the effective negative speed/velocity limit.

r1087 Velocity limit negative effective / n_limit neg eff

SERVO (Lin)

Can be changed: -		**Access level:** 3
Data type: Floating Point	**Data set:** -	**Function diagram:** 3050, 5030, 5210, 6640, 8010
P-Group: Setpoints	**Units group:** SPEED_LIN_METRIC_P3	**Unit selection:** -
Min	**Max**	**Factory setting**
- [m/min]	- [m/min]	- [m/min]

Description: Displays the effective negative speed/velocity limit.

© Siemens AG, 2005. All rights reserved

p1088[0...n] CI: Speed limit negative direction of rotation / n_limit neg

SERVO (Extended setp.), VECTOR

Can be changed: T		**Access level:** 3
Data type: Unsigned32	**Data set:** CDS	**Function diagram:** 3050
P-Group: Setpoints	**Units group:** -	**Unit selection:** -
Min	**Max**	**Factory setting**
-	-	1086[0]

Description: Sets the signal source for the speed/velocity limit of the negative direction.

p1088[0...n] CI: Velocity limit, negative direction / n_limit neg

SERVO (Lin, Extended setp.)

Can be changed: T		**Access level:** 3
Data type: Unsigned32	**Data set:** CDS	**Function diagram:** 3050
P-Group: Setpoints	**Units group:** -	**Unit selection:** -
Min	**Max**	**Factory setting**
-	-	1086[0]

Description: Sets the signal source for the speed/velocity limit of the negative direction.

p1091[0...n] Skip speed 1 / Skip speed 1

SERVO (Extended setp.), VECTOR

Can be changed: U, T		**Access level:** 3
Data type: Floating Point	**Data set:** DDS	**Function diagram:** 3050
P-Group: Setpoints	**Units group:** SPEED_ROT	**Unit selection:** -
Min	**Max**	**Factory setting**
0.000 [1/min]	210000.000 [1/min]	0.000 [1/min]

Description: Sets the skip speed/velocity 1.
Dependency: Refer to: p1092, p1093, p1094, p1101
Note: The skip (suppression) speeds can be used to prevent the effects of mechanical resonance.

p1091[0...n] Skip velocity 1 / Skip speed 1

SERVO (Lin, Extended setp.)

Can be changed: U, T		**Access level:** 3
Data type: Floating Point	**Data set:** DDS	**Function diagram:** 3050
P-Group: Setpoints	**Units group:** SPEED_LIN_METRIC_P3	**Unit selection:** -
Min	**Max**	**Factory setting**
0.000 [m/min]	1000.000 [m/min]	0.000 [m/min]

Description: Sets the skip speed/velocity 1.
Dependency: Refer to: p1092, p1093, p1094, p1101
Note: The skip (suppression) speeds can be used to prevent the effects of mechanical resonance.

p1092[0...n] Skip speed 2 / Skip speed 2

SERVO (Extended setp.), VECTOR

Can be changed: U, T		**Access level:** 3
Data type: Floating Point	**Data set:** DDS	**Function diagram:** 3050
P-Group: Setpoints	**Units group:** SPEED_ROT	**Unit selection:** -
Min	**Max**	**Factory setting**
0.000 [1/min]	210000.000 [1/min]	0.000 [1/min]

Description: Sets the skip speed/velocity 2.
Dependency: Refer to: p1091, p1093, p1094, p1101

© Siemens AG, 2005. All rights reserved

p1092[0...n] Skip velocity 2 / Skip speed 2

SERVO (Lin, Extended setp.)

Can be changed: U, T | | **Access level:** 3
Data type: Floating Point | **Data set:** DDS | **Function diagram:** 3050
P-Group: Setpoints | **Units group:** SPEED_LIN_METRIC_P3 | **Unit selection:** -

Min	Max	Factory setting
0.000 [m/min]	1000.000 [m/min]	0.000 [m/min]

Description: Sets the skip speed/velocity 2.
Dependency: Refer to: p1091, p1093, p1094, p1101

p1093[0...n] Skip speed 3 / Skip speed 3

SERVO (Extended setp.), VECTOR

Can be changed: U, T | | **Access level:** 3
Data type: Floating Point | **Data set:** DDS | **Function diagram:** 3050
P-Group: Setpoints | **Units group:** SPEED_ROT | **Unit selection:** -

Min	Max	Factory setting
0.000 [1/min]	210000.000 [1/min]	0.000 [1/min]

Description: Sets the skip speed/velocity 3.
Dependency: Refer to: p1091, p1092, p1094, p1101

p1093[0...n] Skip velocity 3 / Skip speed 3

SERVO (Lin, Extended setp.)

Can be changed: U, T | | **Access level:** 3
Data type: Floating Point | **Data set:** DDS | **Function diagram:** 3050
P-Group: Setpoints | **Units group:** SPEED_LIN_METRIC_P3 | **Unit selection:** -

Min	Max	Factory setting
0.000 [m/min]	1000.000 [m/min]	0.000 [m/min]

Description: Sets the skip speed/velocity 3.
Dependency: Refer to: p1091, p1092, p1094, p1101

p1094[0...n] Skip speed 4 / Skip speed 4

SERVO (Extended setp.), VECTOR

Can be changed: U, T | | **Access level:** 3
Data type: Floating Point | **Data set:** DDS | **Function diagram:** 3050
P-Group: Setpoints | **Units group:** SPEED_ROT | **Unit selection:** -

Min	Max	Factory setting
0.000 [1/min]	210000.000 [1/min]	0.000 [1/min]

Description: Sets the skip speed/velocity 4.
Dependency: Refer to: p1091, p1092, p1093, p1101

p1094[0...n] Skip velocity 4 / Skip speed 4

SERVO (Lin, Extended setp.)

Can be changed: U, T | | **Access level:** 3
Data type: Floating Point | **Data set:** DDS | **Function diagram:** 3050
P-Group: Setpoints | **Units group:** SPEED_LIN_METRIC_P3 | **Unit selection:** -

Min	Max	Factory setting
0.000 [m/min]	1000.000 [m/min]	0.000 [m/min]

Description: Sets the skip speed/velocity 4.
Dependency: Refer to: p1091, p1092, p1093, p1101

© Siemens AG, 2005. All rights reserved

p1101[0...n] Skip speed bandwidth / Skip_n bandwidth

SERVO (Extended setp.), VECTOR

Can be changed: U, T		**Access level:** 3
Data type: Floating Point	**Data set:** DDS	**Function diagram:** 3050
P-Group: Setpoints	**Units group:** SPEED_ROT	**Unit selection:** -
Min	**Max**	**Factory setting**
0.000 [1/min]	210000.000 [1/min]	0.000 [1/min]

Description: Sets the bandwidth for the skip speeds/velocities 1 to 4.

Dependency: Refer to: p1091, p1092, p1093, p1094

Note: The setpoint (reference) speeds are skipped (suppressed) in the range of the skip speed +/-p1101.

Steady-state operation is not possible in the skipped (suppressed) speed range. The skip (suppression) range is skipped.

Example:

p1091 = 600 and p1101 = 20 --> setpoint speeds of between 580 and 620 [RPM] are skipped.

p1101[0...n] Skip velocity bandwidth / Skip_n bandwidth

SERVO (Lin, Extended setp.)

Can be changed: U, T		**Access level:** 3
Data type: Floating Point	**Data set:** DDS	**Function diagram:** 3050
P-Group: Setpoints	**Units group:** SPEED_LIN_METRIC_P3	**Unit selection:** -
Min	**Max**	**Factory setting**
0.000 [m/min]	1000.000 [m/min]	0.000 [m/min]

Description: Sets the bandwidth for the skip speeds/velocities 1 to 4.

Dependency: Refer to: p1091, p1092, p1093, p1094

Note: The setpoint (reference) speeds are skipped (suppressed) in the range of the skip speed +/-p1101.

Steady-state operation is not possible in the skipped (suppressed) speed range. The skip (suppression) range is skipped.

Example:

p1091 = 600 and p1101 = 20 --> setpoint speeds of between 580 and 620 [RPM] are skipped.

p1110[0...n] BI: Inhibit negative direction / Inhib neg dir rot

SERVO (Extended setp.), VECTOR

Can be changed: T		**Access level:** 3
Data type: Unsigned32	**Data set:** CDS	**Function diagram:** 2505
P-Group: Setpoints	**Units group:** -	**Unit selection:** -
Min	**Max**	**Factory setting**
-	-	0

Description: Sets the signal source to disable the negative direction.

Dependency: Refer to: p1111

p1111[0...n] BI: Inhibit positive direction / Inhib pos dir rot

SERVO (Extended setp.), VECTOR

Can be changed: T		**Access level:** 3
Data type: Unsigned32	**Data set:** CDS	**Function diagram:** 2505
P-Group: Setpoints	**Units group:** -	**Unit selection:** -
Min	**Max**	**Factory setting**
-	-	0

Description: Sets the signal source to disable the positive direction.

Dependency: Refer to: p1110

© Siemens AG, 2005. All rights reserved

r1112 CO: Speed setpoint after minimum limiting / n_set n. min_lim

SERVO (Extended setp.), VECTOR

Can be changed: -		**Access level:** 3
Data type: Floating Point	**Data set:** -	**Function diagram:** 3050
P-Group: Setpoints	**Units group:** SPEED_ROT	**Unit selection:** -
Min	**Max**	**Factory setting**
- [1/min]	- [1/min]	- [1/min]

Description: Displays the speed / velocity setpoint after the minimum limiting.
Dependency: Refer to: p1091, p1092, p1093, p1094, p1101

r1112 CO: Velocity setpoint after minimum limiting / n_set n. min_lim

SERVO (Lin, Extended setp.)

Can be changed: -		**Access level:** 3
Data type: Floating Point	**Data set:** -	**Function diagram:** 3050
P-Group: Setpoints	**Units group:** SPEED_LIN_METRIC_P3	**Unit selection:** -
Min	**Max**	**Factory setting**
- [m/min]	- [m/min]	- [m/min]

Description: Displays the speed / velocity setpoint after the minimum limiting.
Dependency: Refer to: p1091, p1092, p1093, p1094, p1101

p1113[0...n] BI: Direction reversal / Direction reversal

SERVO (Extended setp.), VECTOR

Can be changed: T		**Access level:** 3
Data type: Unsigned32	**Data set:** CDS	**Function diagram:** 2442, 2505
P-Group: Setpoints	**Units group:** -	**Unit selection:** -
Min	**Max**	**Factory setting**
-	-	0

Description: Sets the signal source to reverse the motor direction (of rotation).
Dependency: Refer to: r1198

r1114 CO: Setpoint after the direction of rotation limit / Setpt after limit

SERVO (Extended setp.), VECTOR

Can be changed: -		**Access level:** 3
Data type: Floating Point	**Data set:** -	**Function diagram:** 1550, 3040, 3050
P-Group: Setpoints	**Units group:** SPEED_ROT	**Unit selection:** -
Min	**Max**	**Factory setting**
- [1/min]	- [1/min]	- [1/min]

Description: Displays the speed/velocity setpoint after the changeover and limiting the direction.

r1114 CO: Setpoint after the direction limiting / Setpt after limit

SERVO (Lin, Extended setp.)

Can be changed: -		**Access level:** 3
Data type: Floating Point	**Data set:** -	**Function diagram:** 1550, 3040, 3050
P-Group: Setpoints	**Units group:** SPEED_LIN_METRIC_P3	**Unit selection:** -
Min	**Max**	**Factory setting**
- [m/min]	- [m/min]	- [m/min]

Description: Displays the speed/velocity setpoint after the changeover and limiting the direction.

© Siemens AG, 2005. All rights reserved

p1115 Ramp-function generator selection / RFG selection

SERVO (Extended setp.), VECTOR

Can be changed: T		**Access level:** 3
Data type: Integer16	**Data set:** -	**Function diagram:** 1550, 3080
P-Group: Setpoints	**Units group:** -	**Unit selection:** -
Min	**Max**	**Factory setting**
0	1	0

Description: Sets the ramp-function generator type.

Values:
0: Basic ramp-function generator
1: Extended ramp-function generator

Note: Another ramp-function generator type can only be selected when the motor is at a standstill.

r1119 CO: Ramp-function generator setpoint at the input / RFG setpt at input

SERVO (Extended setp.), VECTOR

Can be changed: -		**Access level:** 3
Data type: Floating Point	**Data set:** -	**Function diagram:** 1550, 1750, 3050, 3060, 3070, 8010
P-Group: Setpoints	**Units group:** SPEED_ROT	**Unit selection:** -
Min	**Max**	**Factory setting**
- [1/min]	- [1/min]	- [1/min]

Description: Displays the setpoint at the input of the ramp-function generator.

Note: The setpoint is influenced by other functions, e.g. skip (suppressed) speeds, minimum and maximum limits.

r1119 CO: Ramp-function generator setpoint at the input / RFG setpt at input

SERVO (Lin, Extended setp.)

Can be changed: -		**Access level:** 3
Data type: Floating Point	**Data set:** -	**Function diagram:** 1550, 1750, 3050, 3060, 3070, 8010
P-Group: Setpoints	**Units group:** SPEED_LIN_METRIC_P3	**Unit selection:** -
Min	**Max**	**Factory setting**
- [m/min]	- [m/min]	- [m/min]

Description: Displays the setpoint at the input of the ramp-function generator.

Note: The setpoint is influenced by other functions, e.g. skip (suppressed) speeds, minimum and maximum limits.

p1120[0...n] Ramp-function generator ramp-up time / RFG ramp-up time

SERVO (Extended setp.), VECTOR

Can be changed: C2(1), U, T		**Access level:** 1
Data type: Floating Point	**Data set:** DDS	**Function diagram:** 3060, 3070
P-Group: Setpoints	**Units group:** TIME	**Unit selection:** -
Min	**Max**	**Factory setting**
0.000 [s]	999999.000 [s]	10.000 [s]

Description: The drive is accelerated from standstill (setpoint = 0) up to the maximum speed/velocity (p1082) in this time.

Dependency: Refer to: p1082

Note: The parameter is adapted during the rotating measurement (p1960 > 0). This is the reason that during the rotating measurement, the motor can accelerate faster than was originally parameterized.

© Siemens AG, 2005. All rights reserved

p1121[0...n] Ramp-function generator ramp-down time / RFG ramp-down time

SERVO, VECTOR

Can be changed: C2(1), U, T		**Access level:** 1
Data type: Floating Point	**Data set:** DDS	**Function diagram:** 3060, 3070
P-Group: Setpoints	**Units group:** TIME	**Unit selection:** -
Min	**Max**	**Factory setting**
0.000 [s]	999999.000 [s]	10.000 [s]

Description: The drive is decelerated from the maximum speed / velocity (p1082) down to standstill (setpoint = 0) in this time.
Dependency: Refer to: p1082

p1122[0...n] BI: Bypass ramp-function generator / Bypass RFG

SERVO (Extended setp.), VECTOR

Can be changed: U, T		**Access level:** 3
Data type: Unsigned32	**Data set:** CDS	**Function diagram:** 2505
P-Group: Setpoints	**Units group:** -	**Unit selection:** -
Min	**Max**	**Factory setting**
-	-	0

Description: Sets the signal source for bypassing the ramp generator (ramp-up and ramp-down times = 0).
Note: For VECTOR in sensorless operation, it is not permissible that the ramp-function generator is bypassed.

p1130[0...n] Ramp-function generator initial rounding-off time / RFG t_start_round

SERVO (Extended setp.), VECTOR

Can be changed: U, T		**Access level:** 2
Data type: Floating Point	**Data set:** DDS	**Function diagram:** 3070
P-Group: Setpoints	**Units group:** TIME	**Unit selection:** -
Min	**Max**	**Factory setting**
0.000 [s]	30.000 [s]	0.000 [s]

Description: Sets the initial rounding-off time for the extended ramp generator. The value applies to ramp-up and ramp-down.
Note: Rounding-off times avoid an abrupt response and prevent damage to the mechanical system.

p1131[0...n] Ramp-function generator final rounding-off time / RFG t_end_delay

SERVO (Extended setp.), VECTOR

Can be changed: U, T		**Access level:** 2
Data type: Floating Point	**Data set:** DDS	**Function diagram:** 3070
P-Group: Setpoints	**Units group:** TIME	**Unit selection:** -
Min	**Max**	**Factory setting**
0.000 [s]	30.000 [s]	0.000 [s]

Description: Sets the final rounding-off time for the extended ramp generator. The value applies to ramp-up and ramp-down.
Note: Rounding-off times avoid an abrupt response and prevent damage to the mechanical system.

p1134[0...n] Ramp-function generator rounding-off type / RFG round-off type

SERVO (Extended setp.), VECTOR

Can be changed: U, T		**Access level:** 2
Data type: Integer16	**Data set:** DDS	**Function diagram:** 3070
P-Group: Setpoints	**Units group:** -	**Unit selection:** -
Min	**Max**	**Factory setting**
0	1	0

Description: Sets the smoothed response to the OFF1 command or the reduced setpoint for the extended ramp-function generator.
Values:
0: Cont. smoothing
1: Discont smoothing
Dependency: No effect up to initial rounding-off time (p1130) > 0 s.

© Siemens AG, 2005. All rights reserved

Note: p1134 = 0 (continuous smoothing)
The rounding-off is always effective. Overshoots may occur.
p1134 = 1 (discontinuous smoothing)
The final rounding-off is not effective when the setpoint is suddenly reduced (as step function) while running-up.

p1135[0...n] OFF3 ramp-down time / RFG OFF3 t_ramp-dn

SERVO, VECTOR

Can be changed: C2(1), U, T		**Access level:** 2
Data type: Floating Point	**Data set:** DDS	**Function diagram:** 3060, 3070
P-Group: Setpoints	**Units group:** TIME	**Unit selection:** -
Min	**Max**	**Factory setting**
0.000 [s]	600.000 [s]	0.000 [s]

Description: Sets the ramp-down time from the maximum speed down to zero speed for the OFF3 command.
Note: This time can be exceeded if the DC-link voltage reaches its maximum value.

p1136[0...n] OFF3 initial rounding-off time / RFGOFF3 t_strt_rnd

SERVO (Extended setp.), VECTOR

Can be changed: U, T		**Access level:** 2
Data type: Floating Point	**Data set:** DDS	**Function diagram:** 3070, 3080
P-Group: Setpoints	**Units group:** TIME	**Unit selection:** -
Min	**Max**	**Factory setting**
0.000 [s]	30.000 [s]	0.000 [s]

Description: Sets the initial rounding-off time for OFF3 for the extended ramp generator.

p1137[0...n] OFF3 final rounding-off time / RFG OFF3 t_end_del

SERVO (Extended setp.), VECTOR

Can be changed: U, T		**Access level:** 2
Data type: Floating Point	**Data set:** DDS	**Function diagram:** 3070
P-Group: Setpoints	**Units group:** TIME	**Unit selection:** -
Min	**Max**	**Factory setting**
0.000 [s]	30.000 [s]	0.000 [s]

Description: Sets the final rounding-off time for OFF3 for the extended ramp generator.

p1140[0...n] BI: Enables the ramp-function generator / Enable RFG

SERVO, VECTOR

Can be changed: T		**Access level:** 3
Data type: Unsigned32	**Data set:** CDS	**Function diagram:** 2442, 2443, 2501
P-Group: Setpoints	**Units group:** -	**Unit selection:** -
Min	**Max**	**Factory setting**
-	-	1

Description: Sets the signal source for control word 1 bit 4 (operating condition/disable ramp-function generator).
Dependency: Refer to: p1141, p1142
Note: Bit 4 = 0: Inhibits the ramp-function generator (the ramp-function generator output is set to zero)
Bit 4 = 1: Operating condition (the ramp-function generator can be enabled)

p1140 BI: Enables the ramp-function generator / Enable RFG

TM41

Can be changed: T		**Access level:** 3
Data type: Unsigned32	**Data set:** -	**Function diagram:** -
P-Group: Setpoints	**Units group:** -	**Unit selection:** -
Min	**Max**	**Factory setting**
-	-	1

Description: Sets the signal source for control word 1 bit 4 (operating condition/disable ramp-function generator).

© Siemens AG, 2005. All rights reserved

Dependency: Refer to: p1141, p1142
Note: Bit 4 = 0: Inhibits the ramp-function generator (the ramp-function generator output is set to zero)
Bit 4 = 1: Operating condition (the ramp-function generator can be enabled)

p1141[0...n] BI: Start ramp-function generator / Start RFG

SERVO, VECTOR	**Can be changed:** T		**Access level:** 3
	Data type: Unsigned32	**Data set:** CDS	**Function diagram:** 2442, 2443, 2501
	P-Group: Setpoints	**Units group:** -	**Unit selection:** -
	Min	**Max**	**Factory setting**
	-	-	1

Description: Sets the signal source for control word 1 bit 5 (enables ramp-function generator/ stops ramp-function generator)
Dependency: Refer to: p1140, p1142
Note: Bit 5 = 0: Stop the ramp-function generator (the ramp-function generator output is frozen)
Bit 5 = 1: Enables the ramp-function generator

p1141 BI: Start ramp-function generator / Start RFG

TM41	**Can be changed:** T		**Access level:** 3
	Data type: Unsigned32	**Data set:** -	**Function diagram:** -
	P-Group: Setpoints	**Units group:** -	**Unit selection:** -
	Min	**Max**	**Factory setting**
	-	-	1

Description: Sets the signal source for control word 1 bit 5 (enables ramp-function generator/ stops ramp-function generator)
Dependency: Refer to: p1140, p1142
Note: Bit 5 = 0: Stop the ramp-function generator (the ramp-function generator output is frozen)
Bit 5 = 1: Enables the ramp-function generator

p1142[0...n] BI: Enable speed setpoint / Enable n_set

SERVO, VECTOR	**Can be changed:** T		**Access level:** 3
	Data type: Unsigned32	**Data set:** CDS	**Function diagram:** 2442, 2443, 2501
	P-Group: Setpoints	**Units group:** -	**Unit selection:** -
	Min	**Max**	**Factory setting**
	-	-	1

Description: Sets the signal source for control word 1 bit 6 (enables setpoint/disable setpoint).
Dependency: Refer to: p1140, p1141
Note: Bit 6 = 0: Inhibits the setpoint (the ramp-function generator input is set to zero)
Bit 6 = 1: Enables setpoint

p1142 BI: Enable speed setpoint / Enable n_set

TM41	**Can be changed:** T		**Access level:** 3
	Data type: Unsigned32	**Data set:** -	**Function diagram:** -
	P-Group: Setpoints	**Units group:** -	**Unit selection:** -
	Min	**Max**	**Factory setting**
	-	-	1

Description: Sets the signal source for control word 1 bit 6 (enables setpoint/disable setpoint).
Dependency: Refer to: p1140, p1141
Note: Bit 6 = 0: Inhibits the setpoint (the ramp-function generator input is set to zero)
Bit 6 = 1: Enables setpoint

© Siemens AG, 2005. All rights reserved

p1143[0...n] BI: Ramp-function generator, accept setting value / Accept RFG set val

SERVO (Extended setp.), VECTOR

Can be changed: T		**Access level:** 3
Data type: Unsigned32	**Data set:** CDS	**Function diagram:** 3070
P-Group: Setpoints	**Units group:** -	**Unit selection:** -
Min	**Max**	**Factory setting**
-	-	0

Description: Sets the signal source for accepting the setting value of the ramp-function generator.

Dependency: The signal source for the ramp-function generator setting value is set using parameters.
Refer to: p1144

Note: 0/1 signal:
The ramp-function generator output is immediately (without delay) set to the setting value of the ramp-function generator.
1 signal:
The setting value of the ramp-function generator is effective.
1/0 signal:
The input value of the ramp-function generator is effective. The ramp-function generator output is adapted to the input value using the ramp-up time or the ramp-down time.
0 signal:
The input value of the ramp-function generator is effective.

p1144[0...n] CI: Ramp-function generator setting value / RFG setting value

SERVO (Extended setp.), VECTOR

Can be changed: U, T		**Access level:** 3
Data type: Unsigned32	**Data set:** CDS	**Function diagram:** 3070
P-Group: Setpoints	**Units group:** -	**Unit selection:** -
Min	**Max**	**Factory setting**
-	-	0

Description: Sets the signal source for the ramp-function generator setting value.

Dependency: The signal source for accepting the setting value is set using parameters.
Refer to: p1143

p1145[0...n] Ramp-function generator tracking intensity. / RFG track intens

SERVO (Extended setp.), VECTOR

Can be changed: U, T		**Access level:** 3
Data type: Floating Point	**Data set:** DDS	**Function diagram:** 3080
P-Group: Setpoints	**Units group:** -	**Unit selection:** -
Min	**Max**	**Factory setting**
0.0	50.0	1.3

Description: Sets the ramp-function generator tracking.
The output value of the ramp-function generator is tracked (corrected) corresponding to the maximum possible drive acceleration. The reference value is the deviation at the speed/velocity controller input that is necessary to ensure that the motor runs-up at the torque/force limit.

Recommendation: p1145 = 0.0:
This value de-activates the ramp-function generator tracking.
p1145 = 0.0 ... 1.0:
Generally, these values are not practical. They cause the motor to accelerate below its torque limit. The lower the selected value, the greater the margin between the controller and torque limit at run-up.
p1145 > 1.0:
The greater the value, the higher the permissible deviation between the speed setpoint and speed actual value.

Note: In the V/f mode, the ramp-function generator tracking is not active.
For SERVO with V/f operation, the following applies:
The complete ramp-function generator is not active, i.e. ramp-up and ramp-down time = 0.

© Siemens AG, 2005. All rights reserved

p1148[0...n] Ramp-function gen., tolerance for ramp-up and ramp-down active / RFG tol HL/RL act

SERVO (Extended setp.), VECTOR

Can be changed: U, T		**Access level:** 3
Data type: Floating Point	**Data set:** DDS	**Function diagram:** 3060, 3070
P-Group: Setpoints	**Units group:** SPEED_ROT	**Unit selection:** -
Min	**Max**	**Factory setting**
0.00 [1/min]	1000.00 [1/min]	19.80 [1/min]

Description: Sets the tolerance value for the status of the ramp-function generator (ramp-up active, ramp-down active).
If the input of the ramp-function generator does not change in comparison to the output by more than the entered tolerance time, then the status bits "ramp-up active" and "ramp-down active" are not influenced.

Dependency: Refer to: r1199

p1148[0...n] Ramp-function gen., tolerance for ramp-up and ramp-down active / RFG tol HL/RL act

SERVO (Lin, Extended setp.)

Can be changed: U, T		**Access level:** 3
Data type: Floating Point	**Data set:** DDS	**Function diagram:** 3060, 3070
P-Group: Setpoints	**Units group:** SPEED_LIN_METRIC_P3	**Unit selection:** -
Min	**Max**	**Factory setting**
0.00 [m/min]	10.00 [m/min]	0.20 [m/min]

Description: Sets the tolerance value for the status of the ramp-function generator (ramp-up active, ramp-down active).
If the input of the ramp-function generator does not change in comparison to the output by more than the entered tolerance time, then the status bits "ramp-up active" and "ramp-down active" are not influenced.

Dependency: Refer to: r1199

r1150 CO: Ramp-function generator speed setpoint at the output / RFG n_set at outp

SERVO (Extended setp.), VECTOR

Can be changed: -		**Access level:** 3
Data type: Floating Point	**Data set:** -	**Function diagram:** 1550, 3060, 3070, 3080
P-Group: Setpoints	**Units group:** SPEED_ROT	**Unit selection:** -
Min	**Max**	**Factory setting**
- [1/min]	- [1/min]	- [1/min]

Description: Displays the setpoint at the output of the ramp-function generator.

r1150 CO: Ramp-function generator velocity setpoint at the output / RFG n_set at outp

SERVO (Lin, Extended setp.)

Can be changed: -		**Access level:** 3
Data type: Floating Point	**Data set:** -	**Function diagram:** 1550, 3060, 3070, 3080
P-Group: Setpoints	**Units group:** SPEED_LIN_METRIC_P3	**Unit selection:** -
Min	**Max**	**Factory setting**
- [m/min]	- [m/min]	- [m/min]

Description: Displays the setpoint at the output of the ramp-function generator.

© Siemens AG, 2005. All rights reserved

p1152 BI: Setpoint 2 enable / Setpt 2 enable

SERVO (Extended brk), VECTOR (Extended brk)

Can be changed: T		**Access level:** 3
Data type: Unsigned32	**Data set:** -	**Function diagram:** 2711
P-Group: Commands	**Units group:** -	**Unit selection:** -
Min	**Max**	**Factory setting**
-	-	899.15

Description: Sets the signal source for "setpoint 2 enable".

p1155[0...n] CI: Speed controller speed setpoint 1 / n_ctrl n_set 1

SERVO, VECTOR

Can be changed: T		**Access level:** 3
Data type: Unsigned32	**Data set:** CDS	**Function diagram:** 1550, 3080
P-Group: Setpoints	**Units group:** -	**Unit selection:** -
Min	**Max**	**Factory setting**
-	-	0

Description: Sets the signal source for the speed/velocity setpoint 1 of the speed/velocity controller.
Dependency: The effectiveness of this setpoint depends on, e.g. STW1.4 and STW1.6.
Refer to: r0898, p1140, p1142, p1160, r1170

p1155[0...n] CI: Velocity controller, velocity setpoint 1 / n_ctrl n_set 1

SERVO (Lin)

Can be changed: T		**Access level:** 3
Data type: Unsigned32	**Data set:** CDS	**Function diagram:** 1550, 3080
P-Group: Setpoints	**Units group:** -	**Unit selection:** -
Min	**Max**	**Factory setting**
-	-	0

Description: Sets the signal source for the speed/velocity setpoint 1 of the speed/velocity controller.
Dependency: The effectiveness of this setpoint depends on, e.g. STW1.4 and STW1.6.
Refer to: r0898, p1140, p1142, p1160, r1170

p1155 CI: Incremental encoder emulation speed setpoint 1 / Enc_emulat n_set 1

TM41

Can be changed: T		**Access level:** 3
Data type: Unsigned32	**Data set:** -	**Function diagram:** 9674
P-Group: Setpoints	**Units group:** -	**Unit selection:** -
Min	**Max**	**Factory setting**
-	-	0

Description: Sets the signal source for speed setpoint 1 of the incremental encoder emulation.
Dependency: The effectiveness of this setpoint depends on control word 1 (STW1).
Refer to: r0898

p1160[0...n] CI: Speed controller speed setpoint 2 / n_ctrl n_set 2

SERVO, VECTOR

Can be changed: T		**Access level:** 3
Data type: Unsigned32	**Data set:** CDS	**Function diagram:** 1550, 3080
P-Group: Setpoints	**Units group:** -	**Unit selection:** -
Min	**Max**	**Factory setting**
-	-	0

Description: Sets the signal source for the speed/velocity setpoint 2 of the speed/velocity controller.
Dependency: Refer to: p1155, r1170

© Siemens AG, 2005. All rights reserved

Note: For OFF1/OFF3, the ramp-function generator ramp is effective.
The ramp-function generator is set (SERVO: to the actual value, VECTOR: to the setpoint (r1170)) and stops the drive corresponding to the ramp-downtime (p1121 or p1135). While stopping via the ramp-function generator, STW1.4 is effective (enable ramp-function generator).

p1160[0...n] CI: Velocity controller, velocity setpoint 2 / n_ctrl n_set 2

SERVO (Lin)

Can be changed: T		**Access level:** 3
Data type: Unsigned32	**Data set:** CDS	**Function diagram:** 1550, 3080
P-Group: Setpoints	**Units group:** -	**Unit selection:** -
Min	**Max**	**Factory setting**
-	-	0

Description: Sets the signal source for the speed/velocity setpoint 2 of the speed/velocity controller.
Dependency: Refer to: p1155, r1170
Note: For OFF1/OFF3, the ramp-function generator ramp is effective.
The ramp-function generator is set (SERVO: to the actual value, VECTOR: to the setpoint (r1170)) and stops the drive corresponding to the ramp-downtime (p1121 or p1135). While stopping via the ramp-function generator, STW1.4 is effective (enable ramp-function generator).

r1169 CO: Speed controller, speed setpoints 1 and 2 / n_ctrl n_set 1/2

SERVO, VECTOR

Can be changed: -		**Access level:** 3
Data type: Floating Point	**Data set:** -	**Function diagram:** 3080
P-Group: Setpoints	**Units group:** SPEED_ROT	**Unit selection:** -
Min	**Max**	**Factory setting**
- [1/min]	- [1/min]	- [1/min]

Description: Displays the speed/velocity setpoint after the addition of the speed/velocity setpoint 1 (p1155) and the speed/velocity setpoint 2 (p1160).
Dependency: Refer to: p1155, p1160
Note: The value is only correctly displayed when the drive has been enabled.

r1169 CO: Velocity controller, velocity setpoints 1 and 2 / n_ctrl n_set 1/2

SERVO (Lin)

Can be changed: -		**Access level:** 3
Data type: Floating Point	**Data set:** -	**Function diagram:** 3080
P-Group: Setpoints	**Units group:** SPEED_LIN_METRIC_P3	**Unit selection:** -
Min	**Max**	**Factory setting**
- [m/min]	- [m/min]	- [m/min]

Description: Displays the speed/velocity setpoint after the addition of the speed/velocity setpoint 1 (p1155) and the speed/velocity setpoint 2 (p1160).
Dependency: Refer to: p1155, p1160
Note: The value is only correctly displayed when the drive has been enabled.

r1170 CO: Speed controller, setpoint sum / n_ctr setp sum

SERVO, VECTOR

Can be changed: -		**Access level:** 3
Data type: Floating Point	**Data set:** -	**Function diagram:** 1550, 1590, 3080, 5020
P-Group: Setpoints	**Units group:** SPEED_ROT	**Unit selection:** -
Min	**Max**	**Factory setting**
- [1/min]	- [1/min]	- [1/min]

Description: Displays the speed/velocity setpoint after selecting the ramp-function generator and adding the speed/velocity setpoint 1 (p1155) and speed/velocity setpoint 2 (p1160).
Dependency: Refer to: r1150, p1155, p1160

© Siemens AG, 2005. All rights reserved

r1170 CO: Velocity controller, setpoint sum / n_ctr setp sum

SERVO (Lin)

Can be changed: -
Access level: 3
Data type: Floating Point
Data set: -
Function diagram: 1550, 1590, 3080, 5020
P-Group: Setpoints
Units group: SPEED_LIN_METRIC_P3
Unit selection: -

Min	Max	Factory setting
- [m/min]	- [m/min]	- [m/min]

Description: Displays the speed/velocity setpoint after selecting the ramp-function generator and adding the speed/velocity setpoint 1 (p1155) and speed/velocity setpoint 2 (p1160).

Dependency: Refer to: r1150, p1155, p1160

p1189[0...n] Speed setpoint configuration / n_ctrl config

SERVO, VECTOR

Can be changed: U, T
Access level: 2
Data type: Unsigned16
Data set: DDS
Function diagram: 3080
P-Group: Closed-loop control
Units group: -
Unit selection: -

Min	Max	Factory setting
0000 bin	0011 bin	0011 bin

Description: Sets the configuration for the speed/velocity setpoint.

Bit field:

Bit	Signal name	0 signal	1 signal	FP
00	Interpolation ramp-fct gen/speed controller active	No	Yes	3080
01	Interpol. op-loop ctrl /speed controller active	No	Yes	3080

p1189[0...n] Velocity setpoint configuration / n_ctrl config

SERVO (Lin)

Can be changed: U, T
Access level: 2
Data type: Unsigned16
Data set: DDS
Function diagram: 3080
P-Group: Closed-loop control
Units group: -
Unit selection: -

Min	Max	Factory setting
0000 bin	0011 bin	0011 bin

Description: Sets the configuration for the speed/velocity setpoint.

Bit field:

Bit	Signal name	0 signal	1 signal	FP
00	Interpolation ramp-fct gen/speed controller active	No	Yes	3080
01	Interpol. op-loop ctrl /speed controller active	No	Yes	3080

p1189 Incremental encoder emulation configuration / Enc_emulat config

TM41

Can be changed: U, T
Access level: 2
Data type: Unsigned16
Data set: -
Function diagram: 9674
P-Group: Closed-loop control
Units group: -
Unit selection: -

Min	Max	Factory setting
0000 bin	0010 bin	0010 bin

Description: Sets the configuration for the incremental encoder emulation.

Bit field:

Bit	Signal name	0 signal	1 signal	FP
01	Interpol. op-loop ctrl /speed controller active	No	Yes	9674

© Siemens AG, 2005. All rights reserved

p1190 CI: DSC position deviation XERR / DSC XERR

SERVO	**Can be changed:** T		**Access level:** 3
	Data type: Unsigned32	**Data set:** -	**Function diagram:** 1550, 3090
	P-Group: Setpoints	**Units group:** -	**Unit selection:** -
	Min	**Max**	**Factory setting**
	-	-	0

Description: Sets the signal source for the position deviation XERR for DSC (position controller output of the higher-level control).

Dependency: Clock synchronous PROFIBUS must be active.

The position controller gain factor (KPC), the position deviation (XERR) and the speed setpoint (N_SOLL_B) must be included in the setpoint telegram.

At least the encoder interface (Gx_XIST1) must be included in the actual value telegram.

The position actual value used for the internal position controller can be selected using p1192.

Refer to: p1191, p1192

Note: DSC: Dynamic servo control

p1191 CI: DSC position controller gain KPC / DSC KPC

SERVO	**Can be changed:** T		**Access level:** 3
	Data type: Unsigned32	**Data set:** -	**Function diagram:** 1550, 3090
	P-Group: Setpoints	**Units group:** -	**Unit selection:** -
	Min	**Max**	**Factory setting**
	-	-	0

Description: Sets the signal source for the position controller gain KPC for DSC.

Dependency: Refer to: p1190

Note: DSC: Dynamic servo control

p1192[0...n] DSC enc selection / DSC enc selection

SERVO	**Can be changed:** U, T		**Access level:** 3
	Data type: Integer16	**Data set:** DDS	**Function diagram:** 3090
	P-Group: Setpoints	**Units group:** -	**Unit selection:** -
	Min	**Max**	**Factory setting**
	1	3	1

Description: Sets the number of the encoder used for DSC.

Values:
1: Encoder 1 (motor encoder)
2: Encoder 2
3: Encoder 3

Note: DSC: Dynamic servo control

Value 1 corresponds to encoder 1 (motor encoder); the encoder data set is assigned via p0187.

Value 2 corresponds to encoder 2; the encoder data set is assigned via p0188.

Value 3 corresponds to encoder 3; the encoder data set is assigned via p0189.

© Siemens AG, 2005. All rights reserved

p1193[0...n] DSC encoder adaptation factor / DSC encodAdaptFact

SERVO

Can be changed: U, T		**Access level:** 3
Data type: Floating Point	**Data set:** DDS	**Function diagram:** 3090
P-Group: Setpoints	**Units group:** -	**Unit selection:** -
Min	**Max**	**Factory setting**
0.000	1000000.000	1.000

Description: Sets the factor to adapt the encoder when using either encoder 2 or 3 for DSC.
The factor sets the ratio of the pulse difference between the motor encoder and the selected encoder for the same distance moved through. This factor takes into account gear ratios, differences in the number of encoder pulses, etc.

Dependency: Refer to: p1192

Note: Example:
Encoder 1: Motor encoder with 2048 pulses/revolution, ballscrew with 10 mm/revolution pitch
Encoder 2: Linear scale with 20 μm grid division as direct measuring system
p1193 = number of pulses, encoder 1 per motor revolution / number of pulses, encoder 2 per motor revolution
p1193 = 2048 / (10 mm / 20 μm) = 4.096

r1197 Fixed speed setpoint, actual number / n_set_fixed No act

SERVO (Extended setp.), VECTOR

Can be changed: -		**Access level:** 3
Data type: Unsigned32	**Data set:** -	**Function diagram:** 3010
P-Group: Setpoints	**Units group:** -	**Unit selection:** -
Min	**Max**	**Factory setting**
-	-	-

Description: Displays the number of the selected fixed speed/velocity setpoint.

Dependency: Refer to: p1020, p1021, p1022, p1023

Note: If a fixed speed setpoint has not been selected (p1020 ... p1023 = 0, r1197 = 0), then r1024 = 0 (setpoint = 0).

r1197 Fixed velocity setpoint, actual number / n_set_fixed No act

SERVO (Lin, Extended setp.)

Can be changed: -		**Access level:** 3
Data type: Unsigned32	**Data set:** -	**Function diagram:** 3010
P-Group: Setpoints	**Units group:** -	**Unit selection:** -
Min	**Max**	**Factory setting**
-	-	-

Description: Displays the number of the selected fixed speed/velocity setpoint.

Dependency: Refer to: p1020, p1021, p1022, p1023

Note: If a fixed speed setpoint has not been selected (p1020 ... p1023 = 0, r1197 = 0), then r1024 = 0 (setpoint = 0).

© Siemens AG, 2005. All rights reserved

r1198 CO/BO: Control word setpoint channel / STW setpoint chan

SERVO (Extended setp.), VECTOR

Can be changed: -
Access level: 3
Data type: Unsigned16
Data set: -
Function diagram: 1530, 2505
P-Group: Setpoints
Units group: -
Unit selection: -

Min	Max	Factory setting
-	-	-

Description: Displays the control word for the setpoint channel.

Bit field:

Bit	Signal name	0 signal	1 signal	FP
00	Fixed setp. bit 0	No	Yes	-
01	Fixed setp. bit 1	No	Yes	-
02	Fixed setp. bit 2	No	Yes	-
03	Fixed setp. bit 3	No	Yes	-
05	Inhibit negative direction	No	Yes	-
06	Inhibit positive direction	No	Yes	-
11	Direction reversal	No	Yes	-
13	Motorized potentiometer, raise	No	Yes	-
14	Motorized potentiometer, lower	No	Yes	-
15	Bypass ramp-function generator	No	Yes	-

r1199 CO/BO: Ramp-function generator status word / RFG ZSW

SERVO (Extended setp.), VECTOR

Can be changed: -
Access level: 3
Data type: Unsigned16
Data set: -
Function diagram: 1550, 3080, 8010
P-Group: Setpoints
Units group: -
Unit selection: -

Min	Max	Factory setting
-	-	-

Description: Displays the status word for the ramp-function generator (RFG).

Bit field:

Bit	Signal name	0 signal	1 signal	FP
00	Ramp-up active	No	Yes	-
01	Ramp-down active	No	Yes	-
02	Ramp-function generator active	No	Yes	-
03	Ramp-function generator set	No	Yes	-
04	Ramp-function generator held	No	Yes	-
05	Ramp-function generator tracking active	No	Yes	-
06	Maximum limit active	No	Yes	-

Note: Re bit 02:
The bit is an OR logic operation - bit 00 and bit 01.

p1200[0...n] FlyRest oper mode / FlyRest oper mode

VECTOR

Can be changed: U, T
Access level: 2
Data type: Integer16
Data set: DDS
Function diagram: 1690
P-Group: Functions
Units group: -
Unit selection: -

Min	Max	Factory setting
0	6	0

Description: Sets the operating mode for flying restart.
The flying restart allows the drive converter to be powered-up while the motor is still rotating. In so doing, the drive converter output frequency is changed until the actual motor speed/velocity is found.. The motor then accelerates up to the setpoint at the ramp generator setting.

© Siemens AG, 2005. All rights reserved

Values:
0: Flying restart inactive
1: Flying restart always active (start in setpoint direction)
2: FlyRestart active after on, fault, OFF2 (start in setp. dir.)
3: FlyRestart active after fault, OFF2 (start in setp. direction)
4: Flying restart always active (start only in setpoint direction)
5: FlyRestart active after on, fault, OFF2 (start only in setp_dir)
6: FlyRestart active after fault, OFF2 (start only in setp. dir.)

Dependency: A differentiation is made between flying restart for V/f control and for VECTOR control (p1300).

Flying restart, V/f control: p1202, p1203, r1204

Flying restart for closed-loop VECTOR control: p1202, p1203, r1205

Notice: The "flying restart" function must be used in cases where the motor is possibly still running (e.g. after a brief line supply interruption) or is being driven by the load. The system might otherwise shut down as a result of overcurrent.

It does not make sense to use "flying restart" together with the "motor holding brake function" (p1215 > 0) because then the flying restart will always be realized with the motor stationary.

Note: For p1202 = 100 % and p1203 = 100 %, the following applies:

The flying restart takes, as a maximum, twice as long as the motor excitation time (p0346).

For p1200 = 1, 4, the following applies:

Flying restart is active after faults, OFF1, OFF2, OFF3.

For p1200 = 2, 5, the following applies:

The "power-on" is the first power-on operation after the drive system has run-up. This is practical for motors with a high-inertia load.

For p1200 = 1, 2, 3, the following applies: The search is made in both directions.

For p1200 = 4, 5, 6, the following applies: Search performed in the setpoint direction only.

For operation with encoder, the following applies:

p1200 = 1, 4 as well as p1200 = 2, 5 and p1200 = 3, 6 have the same meaning.

For V/f control (p1300 > 20), the following applies:

The speed can only be sensed for values above approx. 5% of the rated motor speed. At lower speeds, it is assumed that the motor is at a standstill (zero speed).

p1202[0...n] FlyRest srch curr / FlyRest srch curr

VECTOR

Can be changed: U, T		**Access level:** 4
Data type: Floating Point	**Data set:** DDS	**Function diagram:** -
P-Group: Functions	**Units group:** PERCENT	**Unit selection:** -
Min	**Max**	**Factory setting**
10 [%]	400 [%]	100 [%]

Description: Sets the search current for the "flying restart" function. The value is referred to the motor magnetizing current.

Dependency: Refer to: r0331

Caution! An unfavorable parameter value can result in the motor behaving in an uncontrollable fashion.

Note: Reducing the search current can improve the flying restart performance (if the system moment of inertia is not very high).

p1203[0...n] Flying restart search rate factor / FlyRst v_Srch Fact

VECTOR

Can be changed: U, T		**Access level:** 4
Data type: Floating Point	**Data set:** DDS	**Function diagram:** -
P-Group: Functions	**Units group:** PERCENT	**Unit selection:** -
Min	**Max**	**Factory setting**
10 [%]	400 [%]	100 [%]

Description: The value influences the rate at which the output frequency is changed during a flying restart . A higher value results in a longer search time.

Caution! An unfavorable parameter value can result in the motor behaving in an uncontrollable fashion.

Notice: For VECTOR control, a value that is too low or too high can cause flying restart to become unstable.

© Siemens AG, 2005. All rights reserved

r1204 CO/BO: Flying restart, V/F control status / FlyRestrt Uf stat

VECTOR

Can be changed: -
Access level: 4
Data type: Unsigned16
Data set: -
Function diagram: -
P-Group: Functions
Units group: -
Unit selection: -

Min	Max	Factory setting
-	-	-

Description: Displays the status for checking and monitoring flying restart states in the V/f control mode.

Bit field:

Bit	Signal name	0 signal	1 signal	FP
00	Current impressed	No	Yes	-
01	No current flow	No	Yes	-
02	Voltage input	No	Yes	-
03	Voltage reduced	No	Yes	-
04	Start ramp-function generator	No	Yes	-
05	Wait for execution	No	Yes	-
06	Slope filter act	No	Yes	-
07	Positive gradient	No	Yes	-
08	Current < threshld	No	Yes	-
09	Current minimum	No	Yes	-
10	Search in the positive direction	No	Yes	-
11	Stop after positive direction	No	Yes	-
12	Stop after negative direction	No	Yes	-
13	No result	No	Yes	-

r1205 CO/BO: Flying restart, VECTOR control status / FlyRestrtVectStat

VECTOR

Can be changed: -
Access level: 4
Data type: Unsigned16
Data set: -
Function diagram: -
P-Group: Functions
Units group: -
Unit selection: -

Min	Max	Factory setting
-	-	-

Description: Displays the status for checking and monitoring flying restart states in the VECTOR control mode.

Bit field:

Bit	Signal name	0 signal	1 signal	FP
00	Save the angle of the speed adaptation circuit	No	Yes	-
01	Set speed adaptation circuit gain to 0	No	Yes	-
02	Enable Isd channel	No	Yes	-
03	Speed control switched-in	No	Yes	-
04	Quadrature arm switched-in	No	Yes	-
05	Special transformation active	No	Yes	-
06	Set I comp of the speed adaptation circuit to 0	No	Yes	-
07	Current control on	No	Yes	-
08	Isd_set = 0 A	No	Yes	-
09	Reserved	No	Yes	-
10	Search in the positive direction	No	Yes	-
11	Search Started	No	Yes	-
12	Current impressed	No	Yes	-
13	Search interrupted	No	Yes	-
14	Deviation of the speed adaptation circuit = 0	No	Yes	-
15	Speed control activated	No	Yes	-

© Siemens AG, 2005. All rights reserved

p1210 Automatic restart, mode / AR mode

VECTOR	**Can be changed:** U, T		**Access level:** 2
	Data type: Integer16	**Data set:** -	**Function diagram:** -
	P-Group: Functions	**Units group:** -	**Unit selection:** -
	Min	**Max**	**Factory setting**
	0	6	0

Description: Sets the automatic restart mode (AR).

Values:
0: Disables automatic restart
1: Acknowledges all faults without restarting
4: Restart after power failure without additional start attempts
6: Restart after fault with additional start attempts

Dependency: The automatic restart requires an active ON command, e.g. that is available at a digital input.

If, for p1210 = 4, 6 there is no active ON command, then the automatic restart is interrupted.

Refer to: p0840, p0857

Refer to: F30003

Cautiont: A change is only accepted and made if the state "initialization" (r1214.0) and "wait for alarm" (r1214.1).

For p1210 > 1, the motor is automatically started.

Note: For brief line supply failures, the motor shaft can still be rotating when restarting. In order to restart while the motor shaft is still rotating, the "flying restart" function should be activated using p1200.

For p1210 = 4, an automatic restart is only carried-out if fault F30003 has occurred at the Motor Module. If additional faults are present, then these faults are also acknowledged and an attempt is made to start.

For p1210 = 1, faults that are present are automatically acknowledged if their cause is removed. If new faults occur after a successful fault acknowledgement, then these are also automatically acknowledged again. A minimum time of p1212 + 1s must expire between a successful fault acknowledgement and a fault re-occurring if the signal ON/OFF1 (control word 1, bit 0) is at a HIGH signal level. If the signal ON/OFF1 is at a LOW signal level, then the time between a successful fault acknowledgement and a new fault must be at least 1s.

For p1210 = 1, fault F07320 is not generated if the acknowledgement attempt was not successful, for example, due to frequently occurring faults.

p1211 Automatic restart, start attempts / AR start attempts

VECTOR	**Can be changed:** U, T		**Access level:** 3
	Data type: Unsigned16	**Data set:** -	**Function diagram:** -
	P-Group: Functions	**Units group:** -	**Unit selection:** -
	Min	**Max**	**Factory setting**
	0	10	3

Description: Sets the absolute number of start attempts for the automatic restart function when any faults are automatically acknowledged (p1210 = 6).

Dependency: The setting of this parameter is always effective for p1210 = 6. For p1210 = 4, the parameter only has an influence if an additional undervoltage fault occurs at the start attempt.

Refer to: p1210, r1214

Refer to: F07320

Cautiont: A change is only accepted and made if the state "initialization" (r1214.0) and "wait for alarm" (r1214.1).

Note: A start attempt begins after all of the faults have been successfully acknowledged and the line supply voltage is available. The start attempt is exited if the motor was magnetized and an additional delay time of 1 s has expired.

If, after the fault has been successfully acknowledged, a new fault occurs up to the end of the starting attempt, then this is re-acknowledged and a new start attempt is initiated at the earliest after half of the delay time p1212 expires and successful acknowledgement. Fault F07320 is output if the number of parameterized start attempts has been reached. After a successful start attempt, i.e. a fault/error has not occurred up to the end of the magnetizing phase, the start counter is again reset after 1s. If a fault re-occurs - the parameterized number of start attempts is again available.

At least one start attempt is always carried-out.

© Siemens AG, 2005. All rights reserved

p1212 Automatic restart, delay time start attempts / WEA t_wait start

VECTOR	**Can be changed:** U, T		**Access level:** 3
	Data type: Floating Point	**Data set:** -	**Function diagram:** -
	P-Group: Functions	**Units group:** TIME	**Unit selection:** -
	Min	**Max**	**Factory setting**
	0.5 [s]	600.0 [s]	1.0 [s]

Description: Sets the delay time up to restart.

Dependency: This parameter setting is active for p1210 = 1, 4, 6.
Refer to: p1210, r1214

Cautiont: A change is only accepted and made if the state "initialization" (r1214.0) and "wait for alarm" (r1214.1).

Note: The faults are automatically acknowledged after half of the waiting time has expired.
if the cause of a fault is not removed in the first halves of the delay time, then it is no longer possible to acknowledge in this time slice.

p1213 Automatic restart, monitoring time line supply return / WEA t_mon line sup

VECTOR	**Can be changed:** U, T		**Access level:** 3
	Data type: Floating Point	**Data set:** -	**Function diagram:** -
	P-Group: Functions	**Units group:** TIME	**Unit selection:** -
	Min	**Max**	**Factory setting**
	0.0 [s]	1999.0 [s]	0.0 [s]

Description: Sets the monitoring time of the automatic restart (AR).

Dependency: Refer to: p1210, r1214

Cautiont: A change is only accepted and made if the state "initialization" (r1214.0) and "wait for alarm" (r1214.1).

Note: The monitoring time starts when the faults are detected. If the automatic acknowledgements are not successful, the monitoring time runs again. If, after the monitoring time has expired, the drive has still not successfully started again (flying restart and magnetization of the motor must have been completed: r0056.4 = 1), then fault F07320 is output.
The monitoring is de-activated with p1213 = 0. If p1213 is set lower than the sum of p1212, the magnetizing time p0346 and the additional delay time due to the flying restart, then fault F07320 is generated at each restart. If, for p1210 = 1, the time in p1213 is set lower than in p1212, then fault F07320 is also generated at each restart.
The monitoring time must extended, if the faults that occur cannot be immediately and successfully acknowledged (e.g. for faults that are permanently present).

r1214 CO/BO: Automatic restart, status / AR status

VECTOR	**Can be changed:** -		**Access level:** 4
	Data type: Unsigned16	**Data set:** -	**Function diagram:** -
	P-Group: Functions	**Units group:** -	**Unit selection:** -
	Min	**Max**	**Factory setting**
	-	-	-

Description: Automatic restart (AR) status word.

Bit field:

Bit	Signal name	0 signal	1 signal	FP
00	Initialization	No	Yes	-
01	Wait for alarm	No	Yes	-
02	Auto restart act.	No	Yes	-
04	Acknowledge alarms	No	Yes	-
05	Restart	No	Yes	-
06	Delay time running after automatic power-up	No	Yes	-
07	Fault	No	Yes	-
12	Start count. bit 0	Off	On	-
13	Start count. bit 1	Off	On	-
14	Start count. bit 2	Off	On	-
15	Start count. bit 3	Off	On	-

© Siemens AG, 2005. All rights reserved

Note: Re bit 06:
For p1210 = 1, this signal is directly set after the faults have been successfully acknowledged.

p1215 Motor holding brake configuration / Brake config

SERVO, VECTOR	**Can be changed:** U, T		**Access level:** 2
	Data type: Integer16	**Data set:** -	**Function diagram:** 2701, 2707, 2711
	P-Group: Functions	**Units group:** -	**Unit selection:** -
	Min	**Max**	**Factory setting**
	0	3	0

Description: Sets the holding brake configuration.

Values:
0: No motor holding brake being used
1: Motor holding brake acc. to sequence control
2: Motor holding brake always open
3: Motor holding brake like sequence control, connection via BICO

Dependency: Refer to: p1216, p1217, p1226, p1227, p1228

Cautiont: For the setting p1215 = 0, if a brake is used, it remains closed. If the motor moves, this will destroy the brake.

Notice: If p1215 was set to 1 or if p1215 was set to 3, then when the pulses are cancelled, the brake is closed even if the motor is still rotating. Pulse cancellation can either be caused by a 0 signal at p0844, p0845 or p0852 or as a result of a fault with OFF2 response. If this is not desirable (e.g. for a flying restart), then the brake can be kept open using a 1 signal at p0855.

Note: If the configuration is set to "no holding brake present" at run-up, then the motor holding brake will be automatically identified. If a motor holding brake is detected, the configuration is set to "motor holding brake as for sequence control".

if an external motor holding brake is being used, then p1215 should be set to 3 and r0899.12 should be interconnected as control signal.

When the function module "extended brake control" is activated (r0108.14 = 1), r1229.1 should be interconnected as control signal.

The parameter can only be set to zero when the pulses are inhibited.

The parameterization "no motor holding brake available" and "safe brake control" enabled (p1215 = 0, p9602 = 1, p9802 = 1) is not practical if there is no motor holding brake.

p1216 Motor holding brake, opening time / Brake t_open

SERVO, VECTOR	**Can be changed:** U, T		**Access level:** 2
	Data type: Floating Point	**Data set:** -	**Function diagram:** 2701, 2711
	P-Group: Functions	**Units group:** TIME_M3	**Unit selection:** -
	Min	**Max**	**Factory setting**
	0 [ms]	10000 [ms]	100 [ms]

Description: Sets the time to open the motor holding brake.
After controlling the holding brake (opens), the speed/velocity setpoint remains at zero for this time. After this, the speed/velocity setpoint is enabled.

Recommendation: This time should be set longer than the actual opening time of the brake. This ensures that the drive cannot accelerate when the brake is applied.

Dependency: Refer to: p1215, p1217

© Siemens AG, 2005. All rights reserved

p1217 Motor holding brake closing time / Brake t_close

SERVO, VECTOR

Can be changed: U, T		**Access level:** 2
Data type: Floating Point	**Data set:** -	**Function diagram:** 2701, 2711
P-Group: Functions	**Units group:** TIME_M3	**Unit selection:** -
Min	**Max**	**Factory setting**
0 [ms]	10000 [ms]	100 [ms]

Description: Sets the time to apply the motor holding brake.

After OFF1 or OFF3 and the holding brake is controlled (the brake closes), then the drive remains closed-loop controlled for this time stationary with a speed setpoint/velocity setpoint of zero. The pulses are cancelled when the time expires.

Recommendation: This time should be set longer than the actual closing time of the brake. This ensures that the pulses are only canceled after the brake has closed.

Dependency: Refer to: p1215, p1216

Notice: If the selected closing time is too short with respect to the actual closing time of the brake, then the load can sag.

If the closing time is selected to be too long with respect to the actual closing time of the brake, the control works against the brake and therefore reduces its lifetime.

p1218[0...1] BI: Open motor holding brake / Open brake

SERVO (Extended brk), VECTOR (Extended brk)

Can be changed: T		**Access level:** 2
Data type: Unsigned32	**Data set:** -	**Function diagram:** 2707
P-Group: Functions	**Units group:** -	**Unit selection:** -
Min	**Max**	**Factory setting**
-	-	1

Description: Sets the signal source for a conditional opening of the motor holding brake.

Dependency: Refer to: p1215

Note: [0]: Signal, open brake, AND logic operation, input 1

[1]: Signal, open brake, AND logic operation, input 2

p1219[0...3] BI: Immediately close motor holding brake / Close brake

SERVO (Extended brk), VECTOR (Extended brk)

Can be changed: T		**Access level:** 2
Data type: Unsigned32	**Data set:** -	**Function diagram:** 2707
P-Group: Functions	**Units group:** -	**Unit selection:** -
Min	**Max**	**Factory setting**
-	-	[0] 0 [1] 0 [2] 0 [3] 1229.9

Description: Sets the signal source for an unconditional (immediate) closing of the motor holding brake.

Dependency: Refer to: p1215, p1275

Note: [0]: Signal, immediately close brake, inversion via p1275.0

[1]: Signal, immediately close brake, inversion via p1275.1

[2]: Signal, immediately close brake

[3]: Signal, immediately close brake - refer to the factory setting

These four signals form an OR logic operation.

© Siemens AG, 2005. All rights reserved

p1220 CI: Open motor holding brake, signal source, threshold / Open brake thresh

SERVO (Extended brk), VECTOR (Extended brk)

Can be changed: T		**Access level:** 2
Data type: Unsigned32	**Data set:** -	**Function diagram:** 2707
P-Group: Functions	**Units group:** -	**Unit selection:** -
Min	**Max**	**Factory setting**
-	-	1

Description: Sets the signal source for the command "open brake".

Dependency: Refer to: p1215, p1221, r1229, p1277

p1221 Open motor holding brake, threshold / Open brake thresh

SERVO (Extended brk), VECTOR (Extended brk)

Can be changed: U, T		**Access level:** 2
Data type: Floating Point	**Data set:** -	**Function diagram:** 2707
P-Group: Functions	**Units group:** PERCENT	**Unit selection:** -
Min	**Max**	**Factory setting**
0.00 [%]	200.00 [%]	0.00 [%]

Description: Sets the threshold value for the command "open brake".

Dependency: Refer to: p1220, r1229, p1277

p1222 BI: Motor holding brake, feedback signal, brake closed / Brake feedb closed

SERVO (Extended brk), VECTOR (Extended brk)

Can be changed: T		**Access level:** 2
Data type: Unsigned32	**Data set:** -	**Function diagram:** 2711
P-Group: Functions	**Units group:** -	**Unit selection:** -
Min	**Max**	**Factory setting**
-	-	0

Description: Sets the signal source for the feedback signal "brake closed".

For motor holding brakes with feedback signal, the signal "brake closed" can be activated using p1275.5 = 1.

Dependency: Refer to: p1223, p1275

Note: 1 signal: Brake closed.

When braking with 1 feedback signal, the inverted feedback signal is connected to the BICO input for the second feedback signal (p1223).

p1223 BI: Motor holding brake, feedback signal, brake open / Brake feedb open

SERVO (Extended brk), VECTOR (Extended brk)

Can be changed: T		**Access level:** 2
Data type: Unsigned32	**Data set:** -	**Function diagram:** 2711
P-Group: Functions	**Units group:** -	**Unit selection:** -
Min	**Max**	**Factory setting**
-	-	1

Description: Sets the signal source for the feedback signal "brake open".

For motor holding brakes with feedback signal, the signal "brake open" can be activated using p1275.5 = 1.

Dependency: Refer to: p1222, p1275

Note: 1 signal: Brake open.

When braking with 1 feedback signal, the inverted feedback signal is connected to the BICO input for the second feedback signal (p1222).

© Siemens AG, 2005. All rights reserved

p1224[0...3] BI: Close motor holding brake at standstill / Brk close standst

SERVO (Extended brk), VECTOR (Extended brk)

Can be changed: T		**Access level:** 2
Data type: Unsigned32	**Data set:** -	**Function diagram:** 2704
P-Group: Functions	**Units group:** -	**Unit selection:** -
Min	**Max**	**Factory setting**
-	-	0

Description: Sets the signal source for close brake at standstill.

Dependency: Refer to: p1275

Note: [0]: Signal, close brake at standstill, inversion via p1275.2
[1]: Signal, close brake at standstill, inversion via p1275.3
[2]: Signal, close brake at standstill
[3]: Signal, close brake at standstill
These four signals form an OR logic operation.

p1225 CI: Standstill detection, threshold value / Standstill thresh

SERVO (Extended brk), VECTOR (Extended brk)

Can be changed: T		**Access level:** 2
Data type: Unsigned32	**Data set:** -	**Function diagram:** 2704
P-Group: Functions	**Units group:** -	**Unit selection:** -
Min	**Max**	**Factory setting**
-	-	63[0]

Description: Sets the signal source "threshold value" for the standstill identification.

Dependency: Refer to: p1226, p1228, r1229

p1226 Threshold for zero speed detection / n_standst n_thresh

SERVO, VECTOR

Can be changed: U, T		**Access level:** 2
Data type: Floating Point	**Data set:** -	**Function diagram:** 2701, 2704
P-Group: Functions	**Units group:** SPEED_ROT	**Unit selection:** -
Min	**Max**	**Factory setting**
0.0 [1/min]	210000.0 [1/min]	20.0 [1/min]

Description: Sets the speed/velocity threshold for the standstill identification.
Acts on the actual value and setpoint monitoring.
When braking with OFF1 or OFF3, when the threshold is fallen below, standstill is identified.
The following applies when the brake control is activated:
When the threshold is fallen below, the brake control is started and the system waits for the brake closing time in p1217. The pulses are then canceled.
if the brake control is not activated, the following applies:
When the threshold is fallen below, the pulses are cancelled and the drive coasts down.

Dependency: Refer to: p1215, p1216, p1217, p1227

Note: Standstill is detected if the actual speed drops below the speed threshold in p1226 or if the monitoring time (p1227) - started when speed setpoint <= speed threshold (p1226) - has expired.
The actual value sensing is subject to measuring noise. For this reason, standstill cannot be detected if the speed threshold is too low.

© Siemens AG, 2005. All rights reserved

p1226 Standstill detection, velocity threshold / n_standst n_thresh

SERVO (Lin)

Can be changed: U, T | **Access level:** 2

Data type: Floating Point | **Data set:** - | **Function diagram:** 2701, 2704

P-Group: Functions | **Units group:** SPEED_LIN_METRIC_P3 | **Unit selection:** -

Min	Max	Factory setting
0.0 [m/min]	1000.0 [m/min]	0.2 [m/min]

Description: Sets the speed/velocity threshold for the standstill identification.

Acts on the actual value and setpoint monitoring.

When braking with OFF1 or OFF3, when the threshold is fallen below, standstill is identified.

The following applies when the brake control is activated:

When the threshold is fallen below, the brake control is started and the system waits for the brake closing time in p1217. The pulses are then canceled.

if the brake control is not activated, the following applies:

When the threshold is fallen below, the pulses are cancelled and the drive coasts down.

Dependency: Refer to: p1215, p1216, p1217, p1227

Note: Standstill is detected if the actual speed drops below the speed threshold in p1226 or if the monitoring time (p1227) - started when speed setpoint <= speed threshold (p1226) - has expired.

The actual value sensing is subject to measuring noise. For this reason, standstill cannot be detected if the speed threshold is too low.

p1227 Zero speed detection monitoring time / n_standst t_monit

SERVO, VECTOR

Can be changed: U, T | **Access level:** 2

Data type: Floating Point | **Data set:** - | **Function diagram:** 2701, 2704

P-Group: Functions | **Units group:** TIME | **Unit selection:** -

Min	Max	Factory setting
0.000 [s]	300.000 [s]	4.000 [s]

Description: Sets the monitoring time for the standstill identification.

When braking with OFF1 or OFF3, standstill is identified after this time has expired.

After this, the brake control is started, the system waits for the closing time in p1217 and then the pulses are cancelled.

Dependency: Refer to: p1215, p1216, p1217, p1226

Note: Standstill (zero speed) is detected if, during the complete monitoring time (p1227), the speed setpoint falls below the speed threshold (p1226).

For p1227 = 300.000 s, the following applies:

The monitoring is deactivated.

This is the pre-setting (default setting) for SINAMICS G.

For p1227 = 0.000 s, the following applies:

With OFF1 or OFF3 and a ramp-down time = 0, the pulses are immediately cancelled and the motor "coasts" down.

p1228 Pulse cancellation delay time / Pulse canc t_del

SERVO, VECTOR

Can be changed: U, T | **Access level:** 2

Data type: Floating Point | **Data set:** - | **Function diagram:** 2701, 2704

P-Group: Functions | **Units group:** TIME | **Unit selection:** -

Min	Max	Factory setting
0.000 [s]	10.000 [s]	0.000 [s]

Description: Sets the delay time for pulse cancellation.

After OFF1 or OFF3 and zero speed detection, the system waits for this time to expire and the pulses are then canceled.

© Siemens AG, 2005. All rights reserved

Dependency: Refer to: p1226, p1227

Note: Standstill (zero speed) is detected if, during the complete delay time (p1228), the speed actual value falls below the speed threshold (p1226).

r1229 CO/BO: Motor holding brake status word / Brake ZSW

SERVO (Extended brk), VECTOR (Extended brk)

Can be changed: -		**Access level:** 2
Data type: Unsigned32	**Data set:** -	**Function diagram:** -
P-Group: Functions	**Units group:** -	**Unit selection:** -
Min	**Max**	**Factory setting**
-	-	-

Description: Displays the status word for the motor holding brake.

Bit field:

Bit	Signal name	0 signal	1 signal	FP
01	Command, open brake (continuous signal)	No	Yes	2711
03	Pulse enable, expanded brake control	No	Yes	2711
04	Brake does not open	No	Yes	2711
05	Brake does not close	No	Yes	2711
06	Brake threshold exceeded	No	Yes	2707
07	Brake threshold fallen below	No	Yes	2704
08	Brake monitoring time expired	No	Yes	2704
09	Pulse enable request missing/n_ctrl inhibited	No	Yes	2707
10	Brake OR logic operation result	No	Yes	2707
11	Brake AND logic operation result	No	Yes	2707

p1240 Vdc controller or Vdc monitoring configuration / Vdc_ctrl config

SERVO

Can be changed: U, T		**Access level:** 3
Data type: Integer16	**Data set:** -	**Function diagram:** 6220
P-Group: Functions	**Units group:** -	**Unit selection:** -
Min	**Max**	**Factory setting**
0	6	0

Description: Sets the configuration of the controller or monitoring for the DC link voltage (Vdc).

Values:
0: Inhib Vdc ctrl
1: Enables Vdc_max controller
2: Enables Vdc_min controller (kinetic buffering)
3: Enables Vdc_min controller and Vdc_max controller
4: Activates Vdc_max monitoring
5: Activates Vdc_min monitoring
6: Activates Vdc_min monitoring and Vdc_max monitoring

Dependency: Refer to: p1244, p1248, p1250

Note: p1240 = 1, 3:

When the upper DC link voltage threshold is reached (p1244), then the following applies:

- the Vdc_max controller limits the regenerative energy in order that the DC link voltage is kept below the maximum DC link voltage when braking.

- when other drives regenerate into the DC link, then the Vdc_max controller causes the motor to accelerate.

p1240 = 2, 3:

When the lower DC link voltage threshold is reached (p1248), the following applies:

- the Vdc_min controller limits the energy taken from the DC link in order to keep the DC link voltage above the minimum DC link voltage when accelerating.

- the motor is braked in order to use its kinetic energy to buffer the DC link.

p1240 = 4, 5, 6:

When the threshold in p1244 or p1248 is reached, the DC link voltage monitoring initiates a fault with a response and therefore reduces additional negative effects on the DC link voltage.

© Siemens AG, 2005. All rights reserved

p1240[0...n] Vdc controller configuration / Vdc_ctrl config

VECTOR (n/M)	**Can be changed:** U, T		**Access level:** 3
	Data type: Integer16	**Data set:** DDS	**Function diagram:** -
	P-Group: Functions	**Units group:** -	**Unit selection:** -
	Min	**Max**	**Factory setting**
	0	3	1

Description: Sets the controller configuration of the DC link voltage (Vdc controller) in the closed-loop control mode.

Values:
0: Inhib Vdc ctrl
1: Enables Vdc_max controller
2: Enables Vdc_min controller (kinetic buffering)
3: Enables Vdc_min controller and Vdc_max controller

Recommendation: If fault F07403 is output, then proceed as follows:
- increase the dynamic factor (p1247).
- if this fault is still output: Increase the switch-on level (p1245).

Dependency: Refer to: p1245
Refer to: F07403

Notice: An excessively high value in p1245 can possibly negatively influence the normal operation of the drive.

Note: p1240 = 1, 3:
When the DC link voltage limit, specified for the Motor Module is reached, the following applies:
- the Vdc_max controller limits the regenerative energy in order that the DC link voltage is kept below the maximum DC link voltage when braking.
- the ramp-down times are automatically increased.

p1240 = 2, 3:
When the switch-in threshold of the Vdc_min controller is reached (p1245), the following applies:
- the Vdc_min controller limits the energy taken from the DC link in order to keep the DC link voltage above the minimum DC link voltage when accelerating.
- the motor is braked in order to use its kinetic energy to buffer the DC link.

r1242 Vdc_min controller switch-in level / Vdc_max on_level

VECTOR (n/M)	**Can be changed:** -		**Access level:** 3
	Data type: Floating Point	**Data set:** -	**Function diagram:** 6220
	P-Group: Functions	**Units group:** VOLTAGE_DC	**Unit selection:** -
	Min	**Max**	**Factory setting**
	- [V]	- [V]	- [V]

Description: Displays the switch-in level for the Vdc_max controller.
If p1254 = 0 (automatic sensing of the switch-in level = off), then the following applies:
AC/AC drive units: r1242 = 1.15 * sqrt(2) * V_line supply = 1.15 * sqrt(2) * p0210 (supply voltage)
DC/AC drive units: r1242 = 1.15 * Vdc = 1.15 * p0210 (supply voltage)
If p1254 = 1 (automatic sensing of the switch-in level = on), then the following applies:
r1242 = Vdc_max - 50.0 V (Vdc_max: overvoltage threshold of the power module)

© Siemens AG, 2005. All rights reserved

p1243[0...n] Vdc_max controller dynamic factor / Vdc_max dyn_factor

VECTOR (n/M)	**Can be changed:** U, T		**Access level:** 3
	Data type: Floating Point	**Data set:** DDS	**Function diagram:** 6220
	P-Group: Functions	**Units group:** PERCENT	**Unit selection:** -
	Min	**Max**	**Factory setting**
	1 [%]	10000 [%]	100 [%]

Description: Sets the dynamic factor for the DC link voltage controller (Vdc_max controller).

100 % means that p1250, p1251 and p1252 (gain, integral-action time and derivative-action time) are used corresponding to their basic settings and based on a theoretical controller optimization.

If subsequent optimization is required, then this can be realized using the dynamic factor. In this case p1250, p1251, p1252 are weighted with the dynamic factor p1243.

If several modules are connected to the DC link, then the dynamic factor must be increased corresponding to the ratio of the additional capacitances to the capacitance of the module involved.

Note: The pre-setting of the dynamic factor is based on the power modules connected at DRIVE-CLiQ. It is assumed that the power module, connected via DRIVE-CLiQ is also electrically connected to the DC link. If this is not the case, then the dynamic factor must be optimized manually.

p1244 DC link voltage threshold, upper / Vdc upper thresh

SERVO	**Can be changed:** U, T		**Access level:** 3
	Data type: Floating Point	**Data set:** -	**Function diagram:** -
	P-Group: Functions	**Units group:** VOLTAGE_DC	**Unit selection:** -
	Min	**Max**	**Factory setting**
	400 [V]	800 [V]	750 [V]

Description: Sets the upper threshold for the DC link voltage.

For p1240 = 1, 3, this threshold is used as limit setpoint for the Vdc_max controller.

For p1240 = 4, 6, for DC link voltages above this threshold, an appropriate fault is output.

Dependency: Refer to: p1240, p1248, p1250

p1245[0...n] Vdc_min controller switch-in level (kinetic buffering) / Vdc_min on_level

VECTOR (n/M)	**Can be changed:** U, T		**Access level:** 3
	Data type: Floating Point	**Data set:** DDS	**Function diagram:** -
	P-Group: Functions	**Units group:** PERCENT	**Unit selection:** -
	Min	**Max**	**Factory setting**
	65 [%]	115 [%]	76 [%]

Description: Sets the switch-in level for the Vdc-min controller (kinetic buffering).

The value is obtained as follows:

AC/AC drive units: p1245[V] = p1245[%] * sqrt(2) * p0210

DC/AC drive units: p1245[V] = p1245[%] * p0210

Notice:

For SINAMICS GM/SM, the following applies:

Minimum value = 0.75

Maximum value = 0.90

Dependency: Refer to: p0210

Warning! An excessively large value may adversely influence normal drive operation.

© Siemens AG, 2005. All rights reserved

r1246 Vdc_min controller switch-in level (kinetic buffering) / Vdc_min on_level

VECTOR (n/M)

Can be changed: -		**Access level:** 3
Data type: Floating Point	**Data set:** -	**Function diagram:** 6220
P-Group: Functions	**Units group:** VOLTAGE_DC	**Unit selection:** -
Min	**Max**	**Factory setting**
- [V]	- [V]	- [V]

Description: Displays the switch-in level for the Vdc_min controller (kinetic buffering).

p1247[0...n] Vdc_min controller dynamic factor (kinetic buffering) / Vdc_min dyn_factor

VECTOR (n/M)

Can be changed: U, T		**Access level:** 3
Data type: Floating Point	**Data set:** DDS	**Function diagram:** 6220
P-Group: Functions	**Units group:** PERCENT	**Unit selection:** -
Min	**Max**	**Factory setting**
1 [%]	10000 [%]	100 [%]

Description: Sets the dynamic factor for the Vdc-min controller (kinetic buffering).

100 % means that p1250, p1251 and p1252 (gain, integral-action time and derivative-action time) are used corresponding to their basic settings and based on a theoretical controller optimization.

If subsequent optimization is required, then this can be realized using the dynamic factor. In this case p1250, p1251, p1252 are weighted with the dynamic factor p1247.

If several modules are connected to the DC link, then the dynamic factor must be increased corresponding to the ratio of the additional capacitances to the capacitance of the module involved.

Note: The pre-setting of the dynamic factor is based on the power modules connected at DRIVE-CLiQ. It is assumed that the power module, connected via DRIVE-CLiQ is also electrically connected to the DC link. If this is not the case, then the dynamic factor must be optimized manually.

p1248 DC link voltage threshold, lower / Vdc lower thresh

SERVO

Can be changed: U, T		**Access level:** 3
Data type: Floating Point	**Data set:** -	**Function diagram:** -
P-Group: Functions	**Units group:** VOLTAGE_DC	**Unit selection:** -
Min	**Max**	**Factory setting**
100 [V]	700 [V]	450 [V]

Description: Sets the lower threshold for the DC link voltage.

For p1240 = 2, 3, this threshold is used as limit setpoint for the Vdc_min controller.

For p1240 = 5, 6, for DC link voltages below this threshold, an appropriate fault is output.

Dependency: Refer to: p1240, p1244, p1250

p1250 Vdc controller proportional gain / Vdc_ctrl Kp

SERVO

Can be changed: U, T		**Access level:** 3
Data type: Floating Point	**Data set:** -	**Function diagram:** 6220
P-Group: Functions	**Units group:** GAIN_VOLTAGE_CTRL	**Unit selection:** p0528
Min	**Max**	**Factory setting**
0.00 [A/V]	10.00 [A/V]	1.00 [A/V]

Description: Sets the proportional gain for the Vdc controller (DC link voltage controller).

Dependency: Refer to: p1240, p1244, p1248

© Siemens AG, 2005. All rights reserved

p1250[0...n] Vdc controller proportional gain / Vdc_ctrl Kp

VECTOR (n/M)	**Can be changed:** U, T		**Access level:** 3
	Data type: Floating Point	**Data set:** DDS	**Function diagram:** -
	P-Group: Functions	**Units group:** -	**Unit selection:** -
	Min	**Max**	**Factory setting**
	0.00	100.00	1.00

Description: Sets the proportional gain for the Vdc controller (DC link voltage controller).
Dependency: The effective proportional gain is obtained taking into account p1243 (Vdc_max controller dynamic factor).
Note: The gain factor is proportional to the capacitance of the DC link. The parameter is preset to a value that is optimally adapted to the capacitance of the individual Motor Module. The capacitances of the other power modules, which are connected to the DC link, can be taken into account using the dynamic factor (p1247 or p1243).

p1251[0...n] Vdc controller integral action time / Vdc_ctrl Tn

VECTOR (n/M)	**Can be changed:** U, T		**Access level:** 3
	Data type: Floating Point	**Data set:** DDS	**Function diagram:** 6220
	P-Group: Functions	**Units group:** TIME_M3	**Unit selection:** -
	Min	**Max**	**Factory setting**
	0 [ms]	10000 [ms]	0 [ms]

Description: Sets the integral action time for the Vdc controller (DC link voltage controller).
Dependency: The effective integral action time is obtained taking into account p1243 (Vdc_max controller dynamic factor).
Note: An integral action time is normally not required for single axis drives. For multi-axis drives on the other hand, it may be possible to compensate for interference from other axes using the integral action time (integral component) . An integral action time of 0 (default) de-activates the controller.

p1252[0...n] Vdc controller derivative-action time / Vdc_ctrl t_deriv.

VECTOR (n/M)	**Can be changed:** U, T		**Access level:** 3
	Data type: Floating Point	**Data set:** DDS	**Function diagram:** 6220
	P-Group: Functions	**Units group:** TIME_M3	**Unit selection:** -
	Min	**Max**	**Factory setting**
	0 [ms]	1000 [ms]	0 [ms]

Description: Sets the derivative-action time constant for the Vdc controller (DC link voltage controller).
Dependency: The effective derivative action time is obtained taking into account p1243 (Vdc_max controller dynamic factor).
Note: During controlled operation this parameter has no effect.

p1254 Vdc_max controller automatic ON level detection / Vdc_max SenseOnLev

VECTOR (n/M)	**Can be changed:** U, T		**Access level:** 3
	Data type: Integer16	**Data set:** -	**Function diagram:** -
	P-Group: Functions	**Units group:** -	**Unit selection:** -
	Min	**Max**	**Factory setting**
	0	1	1

Description: Activates/de-activates the automatic sensing of the switch-in level for the Vdc_max controller.
Values:
0: Automatic detection disabled
1: Automatic detection enabled

© Siemens AG, 2005. All rights reserved

p1255[0...n] Vdc_min controller time threshold / Vdc_min t_thresh

VECTOR (n/M)	**Can be changed:** U, T		**Access level:** 3
	Data type: Floating Point	**Data set:** DDS	**Function diagram:** -
	P-Group: Functions	**Units group:** TIME	**Unit selection:** -
	Min	**Max**	**Factory setting**
	0.000 [s]	10000.000 [s]	0.000 [s]

Description: Sets the time threshold for the Vdc_min controller (kinetic buffering). If this value is exceeded a fault is output; the required response can be parameterized .
Prerequisite: p1256 = 1.

Dependency: Refer to: F07406

p1256[0...n] Vdc_min controller response (kinetic buffering) / Vdc_min response

VECTOR (n/M)	**Can be changed:** U, T		**Access level:** 3
	Data type: Integer16	**Data set:** DDS	**Function diagram:** -
	P-Group: Functions	**Units group:** -	**Unit selection:** -
	Min	**Max**	**Factory setting**
	0	1	0

Description: Sets the response for the Vdc_min controller (kinetic buffering).

Values:
0: Buffer Vdc until undervoltage, n<p1257 -> F07405
1: Buff. Vdc until undervolt., n<p1257 -> F07405, t>p1255 -> F07406

Dependency: Refer to: F07405, F07406

p1257[0...n] Vdc_min controller speed threshold / Vdc_min n_thresh

VECTOR (n/M)	**Can be changed:** U, T		**Access level:** 3
	Data type: Floating Point	**Data set:** DDS	**Function diagram:** -
	P-Group: Functions	**Units group:** SPEED_ROT	**Unit selection:** -
	Min	**Max**	**Factory setting**
	0.0 [1/min]	210000.0 [1/min]	50.0 [1/min]

Description: Sets the speed threshold for the Vdc-min controller (kinetic buffering). If this value is exceeded a fault is output; the required response can be parameterized .

r1258 CO: Vdc controller output / Vdc_ctrl output

VECTOR (n/M)	**Can be changed:** -		**Access level:** 3
	Data type: Floating Point	**Data set:** -	**Function diagram:** 6220
	P-Group: Functions	**Units group:** CURRENT_AC_EFF	**Unit selection:** -
	Min	**Max**	**Factory setting**
	- [Aeff]	- [Aeff]	- [Aeff]

Description: Displays the actual output of the Vdc controller (DC link voltage controller)

Note: The regenerative power limit p1531 is used for closed-loop VECTOR control to pre-control the Vdc_max controller. The lower the power limit is set, the lower the correction signals of the controller when the voltage limit is reached.

© Siemens AG, 2005. All rights reserved

p1272 Simulation oper / Simulation oper

VECTOR

Can be changed: T | **Access level:** 3
Data type: Integer16 | **Data set:** - | **Function diagram:** -
P-Group: Functions | **Units group:** - | **Unit selection:** -

Min	Max	Factory setting
0	1	0

Description: In the simulation mode, the closed-loop control or V/f control can be operated without motor.

The simulation mode is used to test the power module. Even though the DC link voltage is missing, the pulses are enabled when powering-up. The DC link pre-charging is bypassed and the undervoltage detection is disabled.

Closed-loop speed control with an encoder is possible if the torque setpoint (r0079) is used in order to operate a second drive in the closed-loop torque controlled mode.

Values:
0: Off
1: On

Dependency: The following functions are de-activated in the simulation mode:

- motor data identification routine
- motor data identification routine, rotating without encoder
- pole position identification routine

For V/f control and sensorless VECTOR control, flying restart is not carried-out (refer to p1200).

Refer to: r0192, r1837, p1900, p1910, p1960, p1990

Refer to: A07825, F07826

Note: Simulation operation is only possible for DC link voltages below 40 V. In order that the closed-loop control can be calculated, the displayed DC link voltage (r0026, r0070) is set to the rated DC link voltage (refer to p0210). Closed-loop current control and motor model are switched-out (disabled) - the same is true for the speed controller for sensorless closed-loop speed control.

When fault messages occur, the parameter is not automatically reset. This function is not implemented for SINAMICS GM.

p1275 Motor holding brake control word / Brake STW

SERVO (Extended brk), VECTOR (Extended brk)

Can be changed: U, T | **Access level:** 2
Data type: Unsigned32 | **Data set:** - | **Function diagram:** -
P-Group: Functions | **Units group:** - | **Unit selection:** -

Min	Max	Factory setting
0000 bin	0010 1111 bin	0000 bin

Description: Sets the control word for the motor holding brake.

Bit field:

Bit	Signal name	0 signal	1 signal	FP
00	Inverting BI: 1219[0]	No	Yes	2707
01	Inverting BI: 1219[1]	No	Yes	2707
02	Inverting BI: 1224[0]	No	Yes	2704
03	Inverting BI: 1224[1]	No	Yes	2704
05	Brake with feedback	No	Yes	2711

p1276 Motor holding brake, standstill detection, bypass / Brk standst bypass

SERVO (Extended brk), VECTOR (Extended brk)

Can be changed: U, T | **Access level:** 2
Data type: Floating Point | **Data set:** - | **Function diagram:** 2704
P-Group: Functions | **Units group:** TIME | **Unit selection:** -

Min	Max	Factory setting
0.000 [s]	300.000 [s]	300.000 [s]

Description: Sets the delay time for closing the brake at standstill.

After this time has expired, if the "close brake at standstill" or OFF1/OFF3 is present, the brake is closed and the pulses are cancelled.

For p1276 = 300.000 s, the timer is de-activated - this means that the timer output is always zero.

© Siemens AG, 2005. All rights reserved

p1277 Motor holding brake, braking threshold delay exceeded / Del thresh exceed.

SERVO (Extended brk), VECTOR (Extended brk)

Can be changed: U, T		**Access level:** 2
Data type: Floating Point	**Data set:** -	**Function diagram:** 2707
P-Group: Functions	**Units group:** TIME	**Unit selection:** -
Min	**Max**	**Factory setting**
0.000 [s]	300.000 [s]	0.000 [s]

Description: Sets the delay time for the signal "braking threshold exceeded" (BO: r1229.6).

Dependency: Refer to: p1220, p1221, r1229

p1279[0...3] BI: Motor holding brake, OR/AND logic operation / MHB OR AND

SERVO (Extended brk), VECTOR (Extended brk)

Can be changed: T		**Access level:** 2
Data type: Unsigned32	**Data set:** -	**Function diagram:** 2707
P-Group: Functions	**Units group:** -	**Unit selection:** -
Min	**Max**	**Factory setting**
-	-	0

Description: Sets the signal source for the OR/AND logic operation.

Dependency: Refer to: r1229

Note: [0]: OR logic operation, input 1 --> the result is displayed in r1229.10.
[1]: OR logic operation, input 2 --> the result is displayed in r1229.10.
[2]: AND logic operation, input 1 --> the result is displayed in r1229.11.
[3]: AND logic operation, input 2 --> the result is displayed in r1229.11.

p1280[0...n] Vdc controller configuration (V/f) / Vdc_ctrl config

VECTOR

Can be changed: U, T		**Access level:** 3
Data type: Integer16	**Data set:** DDS	**Function diagram:** 1690, 6320
P-Group: Functions	**Units group:** -	**Unit selection:** -
Min	**Max**	**Factory setting**
0	3	1

Description: Sets the configuration of the controller for the DC link voltage (Vdc controller) in the V/f operating mode.

Values:
0: Inhib Vdc ctrl
1: Enables Vdc_max controller
2: Enables Vdc_min controller (kinetic buffering)
3: Enables Vdc_min controller and Vdc_max controller

r1282 Vdc_max controller switch-in level (V/f) / Vdc_max on_level

VECTOR

Can be changed: -		**Access level:** 3
Data type: Floating Point	**Data set:** -	**Function diagram:** 6320
P-Group: Functions	**Units group:** VOLTAGE_DC	**Unit selection:** -
Min	**Max**	**Factory setting**
- [V]	- [V]	- [V]

Description: Displays the switch-in level for the Vdc_max controller.
If p1294 = 0 (automatic sensing of the switch-in level = off), then the following applies:
AC/AC drive units: r1282 = 1.15 * sqrt(2) * V_line supply = 1.15 * sqrt(2) * p0210 (supply voltage)
DC/AC drive units: r1282 = 1.15 * Vdc = 1.15 * p0210 (supply voltage)
If p1294 = 1 (automatic sensing of the switch-in level = on), then the following applies:
r1282 = Vdc_max - 50.0 V (Vdc_max: overvoltage threshold of the power module)

© Siemens AG, 2005. All rights reserved

p1283[0...n] Vdc_max controller dynamic factor (V/f) / Vdc_max dyn_factor

VECTOR	**Can be changed:** U, T		**Access level:** 3
	Data type: Floating Point	**Data set:** DDS	**Function diagram:** -
	P-Group: Functions	**Units group:** PERCENT	**Unit selection:** -
	Min	**Max**	**Factory setting**
	1 [%]	10000 [%]	100 [%]

Description: Sets the dynamic factor for the DC link voltage controller (Vdc_max controller).

100 % means that p1290, p1291 and p1292 (gain, integral-action time and derivative-action time) are used corresponding to their basic settings and based on a theoretical controller optimization.

If subsequent optimization is required, then this can be realized using the dynamic factor. In this case p1290, p1291, p1292 are weighted with the dynamic factor p1283.

If several modules are connected to the DC link, then the dynamic factor must be increased corresponding to the ratio of the additional capacitances to the capacitance of the module involved.

Note: The pre-setting of the dynamic factor is based on the power modules connected at DRIVE-CLiQ. It is assumed that the power module, connected via DRIVE-CLiQ is also electrically connected to the DC link. If this is not the case, then the dynamic factor must be optimized manually.

p1285[0...n] Vdc_min controller switch-in level (kinetic buffering) (V/f) / Vdc_min on_level

VECTOR	**Can be changed:** U, T		**Access level:** 3
	Data type: Floating Point	**Data set:** DDS	**Function diagram:** -
	P-Group: Functions	**Units group:** PERCENT	**Unit selection:** -
	Min	**Max**	**Factory setting**
	65 [%]	115 [%]	76 [%]

Description: Sets the switch-in level for the Vdc-min controller (kinetic buffering).

The value is obtained as follows:

AC/AC drive units: p1285[V] = p1245[%] * sqrt(2) * p0210

DC/AC drive units: p1285[V] = p1245[%] * p0210

r1286 Vdc_min controller switch-in level (kinetic buffering) (V/f) / Vdc_min on_level

VECTOR	**Can be changed:** -		**Access level:** 3
	Data type: Floating Point	**Data set:** -	**Function diagram:** 6320
	P-Group: Functions	**Units group:** VOLTAGE_DC	**Unit selection:** -
	Min	**Max**	**Factory setting**
	- [V]	- [V]	- [V]

Description: Displays the switch-in level for the Vdc_min controller (kinetic buffering).

p1287[0...n] Vdc_min controller dynamic factor (kinetic buffering) (V/f) / Vdc_min dyn_factor

VECTOR	**Can be changed:** U, T		**Access level:** 3
	Data type: Floating Point	**Data set:** DDS	**Function diagram:** -
	P-Group: Functions	**Units group:** PERCENT	**Unit selection:** -
	Min	**Max**	**Factory setting**
	1 [%]	10000 [%]	100 [%]

Description: Sets the dynamic factor for the Vdc-min controller (kinetic buffering).

100 % means that p1290, p1291 and p1292 (gain, integral-action time and derivative-action time) are used corresponding to their basic settings and based on a theoretical controller optimization.

If subsequent optimization is required, then this can be realized using the dynamic factor. In this case p1290, p1291, p1292 are weighted with the dynamic factor p1287.

If several modules are connected to the DC link, then the dynamic factor must be increased corresponding to the ratio of the additional capacitances to the capacitance of the module involved.

© Siemens AG, 2005. All rights reserved

Note: The pre-setting of the dynamic factor is based on the power modules connected at DRIVE-CLiQ. It is assumed that the power module, connected via DRIVE-CLiQ is also electrically connected to the DC link. If this is not the case, then the dynamic factor must be optimized manually.

p1290[0...n] Vdc controller proportional gain (V/f) / Vdc_ctrl Kp

VECTOR	**Can be changed:** U, T		**Access level:** 3
	Data type: Floating Point	**Data set:** DDS	**Function diagram:** 6320
	P-Group: Functions	**Units group:** -	**Unit selection:** -
	Min	**Max**	**Factory setting**
	0.00	100.00	1.00

Description: Sets the proportional gain for the Vdc controller (DC link voltage controller).

Note: The gain factor is proportional to the capacitance of the DC link. The parameter is preset to a value that is optimally adapted to the capacitance of the individual Motor Module. The capacitances of the other power modules, which are connected to the DC link, can be taken into account using the dynamic factor (p1287 or p1283).

p1291[0...n] Vdc controller integral action time (V/f) / Vdc_ctrl Tn

VECTOR	**Can be changed:** U, T		**Access level:** 3
	Data type: Floating Point	**Data set:** DDS	**Function diagram:** 6320
	P-Group: Functions	**Units group:** TIME_M3	**Unit selection:** -
	Min	**Max**	**Factory setting**
	0 [ms]	10000 [ms]	40 [ms]

Description: Sets the integral action time for the Vdc controller (DC link voltage controller).

p1292[0...n] Vdc controller derivative-action time (V/f) / Vdc_ctrl t_deriv.

VECTOR	**Can be changed:** U, T		**Access level:** 3
	Data type: Floating Point	**Data set:** DDS	**Function diagram:** 6320
	P-Group: Functions	**Units group:** TIME_M3	**Unit selection:** -
	Min	**Max**	**Factory setting**
	0 [ms]	1000 [ms]	10 [ms]

Description: Sets the derivative-action time constant for the Vdc controller (DC link voltage controller).

p1293[0...n] Vdc controller output limit (V/f) / Vdc_ctrl outp_lim

VECTOR	**Can be changed:** U, T		**Access level:** 3
	Data type: Floating Point	**Data set:** DDS	**Function diagram:** 6320
	P-Group: Functions	**Units group:** FREQUENCY	**Unit selection:** -
	Min	**Max**	**Factory setting**
	0.0 [Hz]	600.0 [Hz]	10.0 [Hz]

Description: Sets the output limit for the Vdc controller (DC link voltage controller).

p1294 Vdc_max controller automatic detection ON signal level (V/f) / Vdc_max SenseOnLev

VECTOR	**Can be changed:** U, T		**Access level:** 3
	Data type: Integer16	**Data set:** -	**Function diagram:** -
	P-Group: Functions	**Units group:** -	**Unit selection:** -
	Min	**Max**	**Factory setting**
	0	1	1

Description: Activates/de-activates the automatic sensing of the switch-in level for the Vdc_max controller.

Values:
0: Automatic detection disabled
1: Automatic detection enabled

© Siemens AG, 2005. All rights reserved

p1295[0...n] Vdc_min controller time threshold (V/f) / Vdc_min t_thresh

VECTOR	**Can be changed:** U, T		**Access level:** 3
	Data type: Floating Point	**Data set:** DDS	**Function diagram:** -
	P-Group: Functions	**Units group:** TIME	**Unit selection:** -
	Min	**Max**	**Factory setting**
	0.000 [s]	10000.000 [s]	0.000 [s]

Description: Sets the time threshold for the Vdc_min controller (kinetic buffering). If this value is exceeded a fault is output; the required response can be parameterized .
Prerequisite: p1296 = 1.

p1296[0...n] Vdc_min controller response (kinetic buffering) (V/f / Vdc_min response

VECTOR	**Can be changed:** U, T		**Access level:** 3
	Data type: Integer16	**Data set:** DDS	**Function diagram:** -
	P-Group: Functions	**Units group:** -	**Unit selection:** -
	Min	**Max**	**Factory setting**
	0	1	0

Description: Sets the response for the Vdc_min controller (kinetic buffering).

Values:
0: Buffer Vdc until undervoltage, n<p1257 -> F07405
1: Buff. Vdc until undervolt., n<p1257 -> F07405, t>p1255 -> F07406

p1297[0...n] Vdc_min controller speed threshold (V/f) / Vdc_min n_thresh

VECTOR	**Can be changed:** U, T		**Access level:** 3
	Data type: Floating Point	**Data set:** DDS	**Function diagram:** -
	P-Group: Functions	**Units group:** SPEED_ROT	**Unit selection:** -
	Min	**Max**	**Factory setting**
	0.0 [1/min]	210000.0 [1/min]	50.0 [1/min]

Description: Sets the speed threshold for the Vdc-min controller (kinetic buffering). If this value is exceeded a fault is output; the required response can be parameterized .

r1298 CO: Vdc controller output (V/f) / Vdc_ctrl output

VECTOR	**Can be changed:** -		**Access level:** 3
	Data type: Floating Point	**Data set:** -	**Function diagram:** 6320
	P-Group: Functions	**Units group:** SPEED_ROT	**Unit selection:** -
	Min	**Max**	**Factory setting**
	- [1/min]	- [1/min]	- [1/min]

Description: Displays the actual output of the Vdc controller (DC link voltage controller)

p1300[0...n] Open-loop/closed-loop control operating mode / Control mode

SERVO	**Can be changed:** C2(1), T		**Access level:** 2
	Data type: Integer16	**Data set:** DDS	**Function diagram:** 1590, 1690, 5060, 6300
	P-Group: V/f open-loop control	**Units group:** -	**Unit selection:** -
	Min	**Max**	**Factory setting**
	20	23	21

Description: Sets the open and closed loop control mode of a drive.

Values:
20: Speed control (sensorless)
21: Speed control (with encoder)
23: Torque control (with encoder)

© Siemens AG, 2005. All rights reserved

Dependency: Closed-loop speed control can be selected if, as operating mode (refer to p0108), at least closed-loop speed control was selected.

Closed-loop torque control can only be selected if, as operating mode, at least the closed-loop torque/force control was selected.

Only operation with V/f characteristic is possible if the rated motor speed is not entered (p0311).

Closed-loop speed or torque control (with encoder) cannot be selected if the encoder type is not entered (p0400).

For VECTOR drives (refer to p0107):

A synchronous motor can only be operated in a V/f control mode (p1300 < 20).

Refer to: p0108, r0108, p0300, p0311, p0400, p1501

Note: Closed-loop speed or torque control (with encoder) cannot be selected if the encoder type is not entered (p0400).

The closed-loop torque control can only be changed over in operation (p1300 = 20 or 21) by selecting the closed-loop speed control (p1501). At the changeover, the setting of p1300 does not change. In this case, the actual state is displayed in r1407, bit 2 and bit 3.

In the servo control mode the following applies:

Only p1300 = 20, 21, 23 can be set.

For closed-loop VECTOR control, the following applies:

Closed-loop speed control can be selected if, as operating mode, at least closed-loop speed control was selected (p0108 bit 2).

Only operation with V/f characteristic is possible if the rated motor speed is not entered (p0311).

A synchronous motor without speed encoder can only be operated in a V/f control mode (p1300 < 20).

For the open-loop control modes p1300 = 5 and 6 (textile sector), the slip compensation p1335 and the resonance damping p1338 are internally switched-out (disabled) in order to be able to precisely set the output frequency.

During operation (the pulses enabled) the open-loop/closed-loop control mode cannot be changed by changing-over drive data sets.

p1300[0...n] Open-loop/closed-loop control operating mode / Control mode

VECTOR

Can be changed: C2(1), T		**Access level:** 2
Data type: Integer16	**Data set:** DDS	**Function diagram:** 1590, 1690, 5060, 6300
P-Group: V/f open-loop control	**Units group:** -	**Unit selection:** -
Min	**Max**	**Factory setting**
0	23	20

Description: Sets the open and closed loop control mode of a drive.

Values:

0: V/f control with linear characteristic
1: V/f control with linear characteristic and FCC
2: V/f control with parabolic characteristic
3: V/f control with parameterizable characteristic
5: V/f control for drives requiring a precise freq. (e.g. textiles)
6: V/f control for drives requiring a precise frequency with FCC
19: V/f control with independent voltage setpoint
20: Speed control (sensorless)
21: Speed control (with encoder)
22: Torque control (sensorless)
23: Torque control (with encoder)

Dependency: Closed-loop speed control can be selected if, as operating mode (refer to p0108), at least closed-loop speed control was selected.

Closed-loop torque control can only be selected if, as operating mode, at least the closed-loop torque/force control was selected.

Only operation with V/f characteristic is possible if the rated motor speed is not entered (p0311).

Closed-loop speed or torque control (with encoder) cannot be selected if the encoder type is not entered (p0400).

For VECTOR drives (refer to p0107):

A synchronous motor can only be operated in a V/f control mode (p1300 < 20).

Refer to: p0108, r0108, p0300, p0311, p0400, p1501

© Siemens AG, 2005. All rights reserved

Note: Closed-loop speed or torque control (with encoder) cannot be selected if the encoder type is not entered (p0400).

The closed-loop torque control can only be changed over in operation (p1300 = 20 or 21) by selecting the closed-loop speed control (p1501). At the changeover, the setting of p1300 does not change. In this case, the actual state is displayed in r1407, bit 2 and bit 3.

In the servo control mode the following applies:

Only p1300 = 20, 21, 23 can be set.

For closed-loop VECTOR control, the following applies:

Closed-loop speed control can be selected if, as operating mode, at least closed-loop speed control was selected (p0108 bit 2).

Only operation with V/f characteristic is possible if the rated motor speed is not entered (p0311).

A synchronous motor without speed encoder can only be operated in a V/f control mode (p1300 < 20).

For the open-loop control modes p1300 = 5 and 6 (textile sector), the slip compensation p1335 and the resonance damping p1338 are internally switched-out (disabled) in order to be able to precisely set the output frequency.

During operation (the pulses enabled) the open-loop/closed-loop control mode cannot be changed by changing-over drive data sets.

p1310[0...n] Voltage boost permanent / U_boost perm

VECTOR

Can be changed: U, T		**Access level:** 2
Data type: Floating Point	**Data set:** DDS	**Function diagram:** 1690, 6300
P-Group: V/f open-loop control	**Units group:** PERCENT	**Unit selection:** -
Min	**Max**	**Factory setting**
0.0 [%]	250.0 [%]	50.0 [%]

Description: Defines the voltage boost as a [%] referred to the rated motor current (p0305).

The magnitude of the permanent voltage boost is reduced with increasing frequency so that at the rated motor frequency, the rated motor voltage is present.

The magnitude of the boost in Volt at a frequency of zero is defined as follows:

Voltage boost [V] = p0305 (rated motor current [A]) x p0350 (stator/primary section resistance [ohm]) x p1310 (permanent voltage boost [%]) / 100 %

At low output frequencies, there is only a low output voltage in order to maintain the motor flux. However, the output voltage can be too low in order to achieve the following:

- magnetize the induction motor.
- hold the load.
- compensate for losses in the system.

This is the reason that the output voltage can be increased using p1310.

The voltage boost can be used for both linear as well as square-law V/f characteristics and is calculated as follows:

Voltage boost = p0305 (rated motor current x p0350 (stator/primary section resistance) x p1310 (permanent voltage boost)

Dependency: Setting in p0640 (motor overload factor [%] limits the boost.

For closed-loop VECTOR control, the permanent voltage boost (p1310) has no effect as the drive converter automatically sets the optimum operating conditions.

Refer to: p1300, p1311, r1315

Notice: The voltage boost increases the motor temperature (particularly at zero speed).

Note: The voltage boost is only effective for V/f control (p1300).

The boost values are combined with one another if the permanent voltage boost (p1310) is used in conjunction with other boost parameters (acceleration boost (p1311)).

However, these parameters are assigned the following priorities: p1310 > p1311

© Siemens AG, 2005. All rights reserved

p1311[0...n] Voltage boost at acceleration / U_boost accelerate

VECTOR	**Can be changed:** U, T		**Access level:** 2
	Data type: Floating Point	**Data set:** DDS	**Function diagram:** 1690, 6300
	P-Group: V/f open-loop control	**Units group:** PERCENT	**Unit selection:** -
	Min	**Max**	**Factory setting**
	0.0 [%]	250.0 [%]	0.0 [%]

Description: p1311 only results in a voltage boost when ramping-up and generates a supplementary torque/force for accelerating.

The voltage boost becomes effective for a positive setpoint increase and disappears as soon as the setpoint has been reached.

The magnitude of the boost in Volt at a frequency of zero is defined as follows:

Voltage boost [V] = p0305 (rated motor current [A]) x p0350 (stator/primary section resistance [ohm]) x p1310 (permanent voltage boost [%]) / 100 %

Dependency: Setting in p0640 (motor overload factor [%] limits the boost.

Refer to: p1300, p1310, r1315

Notice: The voltage boost results in a higher motor temperature increase.

Note: The voltage boost when accelerating can improve the response to small, positive setpoint changes.

Prioritization of the voltage boosts: refer to p1310

r1315 Voltage boost total / U_boost total

VECTOR	**Can be changed:** -		**Access level:** 4
	Data type: Floating Point	**Data set:** -	**Function diagram:** 6300
	P-Group: V/f open-loop control	**Units group:** VOLTAGE_AC_EFF	**Unit selection:** -
	Min	**Max**	**Factory setting**
	- [Veff]	- [Veff]	- [Veff]

Description: Displays the total resulting voltage boost in volt (p1310 + p1311).

p1317[0...n] V/f control diagnostics activation / Uf diagn act

SERVO	**Can be changed:** T		**Access level:** 3
	Data type: Integer16	**Data set:** DDS	**Function diagram:** 5718
	P-Group: -	**Units group:** -	**Unit selection:** -
	Min	**Max**	**Factory setting**
	0	1	0

Description: Activates the V/f control with linear characteristic for diagnostic purposes.

0: Operation as set in p1300.

1: Activates the V/f control.

Values:
0: Off (p1300 eff)
1: On

Dependency: Refer to: p1318, p1319, p1326, p1327

© Siemens AG, 2005. All rights reserved

p1318[0...n] V/f control ramp-up/ramp-down time / Uf t_rmp-up_rmp-dn

SERVO	**Can be changed:** U, T		**Access level:** 3
	Data type: Floating Point	**Data set:** DDS	**Function diagram:** 5300
	P-Group: V/f open-loop control	**Units group:** TIME	**Unit selection:** -
	Min	**Max**	**Factory setting**
	0.000 [s]	999999.000 [s]	10.000 [s]

Description: Sets the ramp-up and ramp-down time for the V/f control.
The ramp-function generator requires this time to reach the maximum speed (p1082) from zero.

Dependency: Refer to: p1317, p1319, p1326, p1327

Note: This ramp is used for stall protection and operates independently of any ramp-function generator that might have been configured.

p1319[0...n] V/f control voltage at zero frequency / Uf U at f=0 Hz

SERVO	**Can be changed:** U, T		**Access level:** 3
	Data type: Floating Point	**Data set:** DDS	**Function diagram:** 5300
	P-Group: V/f open-loop control	**Units group:** VOLTAGE_AC_EFF	**Unit selection:** -
	Min	**Max**	**Factory setting**
	0.0 [Veff]	25.0 [Veff]	0.0 [Veff]

Description: The linear characteristic for the V/f control is defined by 0 Hz / p1319 and p1326 / p1327.
This parameter specifies the voltage for a frequency of 0 Hz.

Dependency: Activates the V/f control using p1317.
Refer to: p1317, p1326, p1327

Note: Linear interpolation is carried-out between the points 0 Hz / p1319 and p1326 / p1327.

p1320[0...n] V/f control programmable characteristic frequency 1 / Uf char f1

VECTOR	**Can be changed:** U, T		**Access level:** 3
	Data type: Floating Point	**Data set:** DDS	**Function diagram:** 6300
	P-Group: V/f open-loop control	**Units group:** FREQUENCY	**Unit selection:** -
	Min	**Max**	**Factory setting**
	0.00 [Hz]	3000.00 [Hz]	0.00 [Hz]

Description: The programmable characteristic for the V/f control is defined using 4 points and 0 Hz/p1310.
This parameter specifies the voltage of the first point along the characteristic.

Dependency: Selects the freely programmable characteristic using p1300 = 3.
The following applies for the frequency values: p1320 <= p1322 <= p1324 <= p1326. Otherwise, a standard characteristic is used that contains the rated motor operating point.
Refer to: p1300, p1310, p1311, p1321, p1322, p1323, p1324, p1325, p1326, p1327

Note: Linear interpolation is carried-out between the points 0 Hz / p1310, p1320 / p1321 ... p1326 / p1327.
The voltage boost when accelerating (p1311) is also applied to the freely programmable V/Hz characteristic.

p1321[0...n] V/f control programmable characteristic voltage 1 / Uf char U1

VECTOR	**Can be changed:** U, T		**Access level:** 3
	Data type: Floating Point	**Data set:** DDS	**Function diagram:** 6300
	P-Group: V/f open-loop control	**Units group:** VOLTAGE_AC_EFF	**Unit selection:** -
	Min	**Max**	**Factory setting**
	0.0 [Veff]	10000.0 [Veff]	0.0 [Veff]

Description: The programmable characteristic for the V/f control is defined using 4 points and 0 Hz/p1310.
This parameter specifies the voltage of the first point along the characteristic.

Dependency: Selects the freely programmable characteristic using p1300 = 3.
Refer to: p1310, p1311, p1320, p1322, p1323, p1324, p1325, p1326, p1327

© Siemens AG, 2005. All rights reserved

Note: Linear interpolation is carried-out between the points 0 Hz / p1310, p1320 / p1321 ... p1326 / p1327.
The voltage boost when accelerating (p1311) is also applied to the freely programmable V/Hz characteristic.

p1322[0...n] V/f control programmable characteristic frequency 2 / Uf char f2

VECTOR

Can be changed: U, T		**Access level:** 3
Data type: Floating Point	**Data set:** DDS	**Function diagram:** 6300
P-Group: V/f open-loop control	**Units group:** FREQUENCY	**Unit selection:** -
Min	**Max**	**Factory setting**
0.00 [Hz]	3000.00 [Hz]	0.00 [Hz]

Description: The programmable characteristic for the V/f control is defined using 4 points and 0 Hz/p1310.
This parameter specifies the voltage of the second point along the characteristic.

Dependency: The following applies for the frequency values: p1320 <= p1322 <= p1324 <= p1326. Otherwise, a standard characteristic is used that contains the rated motor operating point.
Refer to: p1310, p1311, p1320, p1321, p1323, p1324, p1325, p1326, p1327

p1323[0...n] V/f control programmable characteristic voltage 2 / Uf char U2

VECTOR

Can be changed: U, T		**Access level:** 3
Data type: Floating Point	**Data set:** DDS	**Function diagram:** 6300
P-Group: V/f open-loop control	**Units group:** VOLTAGE_AC_EFF	**Unit selection:** -
Min	**Max**	**Factory setting**
0.0 [Veff]	10000.0 [Veff]	0.0 [Veff]

Description: The programmable characteristic for the V/f control is defined using 4 points and 0 Hz/p1310.
This parameter specifies the voltage of the second point along the characteristic.

Dependency: Refer to: p1310, p1311, p1320, p1321, p1322, p1324, p1325, p1326, p1327

p1324[0...n] V/f control programmable characteristic frequency 3 / Uf char f3

VECTOR

Can be changed: U, T		**Access level:** 3
Data type: Floating Point	**Data set:** DDS	**Function diagram:** 6300
P-Group: V/f open-loop control	**Units group:** FREQUENCY	**Unit selection:** -
Min	**Max**	**Factory setting**
0.00 [Hz]	3000.00 [Hz]	0.00 [Hz]

Description: The programmable characteristic for the V/f control is defined using 4 points and 0 Hz/p1310.
This parameter specifies the voltage of the third point along the characteristic.

Dependency: The following applies for the frequency values: p1320 <= p1322 <= p1324 <= p1326. Otherwise, a standard characteristic is used that contains the rated motor operating point.
Refer to: p1310, p1311, p1320, p1321, p1322, p1323, p1325, p1326, p1327

p1325[0...n] V/f control programmable characteristic voltage 3 / Uf char U3

VECTOR

Can be changed: U, T		**Access level:** 3
Data type: Floating Point	**Data set:** DDS	**Function diagram:** 6300
P-Group: V/f open-loop control	**Units group:** VOLTAGE_AC_EFF	**Unit selection:** -
Min	**Max**	**Factory setting**
0.0 [Veff]	10000.0 [Veff]	0.0 [Veff]

Description: The programmable characteristic for the V/f control is defined using 4 points and 0 Hz/p1310.
This parameter specifies the voltage of the third point along the characteristic.

Dependency: Refer to: p1310, p1311, p1320, p1321, p1322, p1323, p1324, p1326, p1327

© Siemens AG, 2005. All rights reserved

p1326[0...n] V/f control programmable characteristic frequency 4 / Uf char f4

SERVO, VECTOR	**Can be changed:** U, T		**Access level:** 3
	Data type: Floating Point	**Data set:** DDS	**Function diagram:** 5300, 6300
	P-Group: V/f open-loop control	**Units group:** FREQUENCY	**Unit selection:** -
	Min	**Max**	**Factory setting**
	0.00 [Hz]	10000.00 [Hz]	0.00 [Hz]

Description: In the servo control mode the following applies:
The linear characteristic for the V/f control is defined by 0 Hz / p1319 and p1326 / p1327.
For closed-loop VECTOR control, the following applies:
The programmable characteristic for the V/f control is defined using 4 points and 0 Hz/p1310.
This parameter specifies the voltage of the fourth point along the characteristic.

Dependency: In the servo control mode the following applies:
Activates the V/f control using p1317.
For closed-loop VECTOR control, the following applies:
Selects the freely programmable characteristic using p1300 = 3.
The following applies for the frequency values: p1320 <= p1322 <= p1324 <= p1326. Otherwise, a standard characteristic is used that contains the rated motor operating point.
Refer to: p1310, p1311, p1317, p1319, p1320, p1321, p1322, p1323, p1324, p1325, p1327

Note: In the servo control mode the following applies:
Linear interpolation is carried-out between the points 0 Hz / p1319 and p1326 / p1327.
For closed-loop VECTOR control, the following applies:
Linear interpolation is carried-out between the points 0 Hz / p1310, p1320 / p1321 ... p1326 / p1327.
The voltage boost when accelerating (p1311) is also applied to the freely programmable V/Hz characteristic.

p1327[0...n] V/f control programmable characteristic voltage 4 / Uf char U4

SERVO, VECTOR	**Can be changed:** U, T		**Access level:** 3
	Data type: Floating Point	**Data set:** DDS	**Function diagram:** 5300, 6300
	P-Group: V/f open-loop control	**Units group:** VOLTAGE_AC_EFF	**Unit selection:** -
	Min	**Max**	**Factory setting**
	0.0 [Veff]	10000.0 [Veff]	0.0 [Veff]

Description: In the servo control mode the following applies:
The linear characteristic for the V/f control is defined by 0 Hz / p1319 and p1326 / p1327.
For closed-loop VECTOR control, the following applies:
The programmable characteristic for the V/f control is defined using 4 points and 0 Hz/p1310.
This parameter specifies the voltage of the fourth point along the characteristic.

Dependency: In the servo control mode the following applies:
Activates the V/f control using p1317.
For closed-loop VECTOR control, the following applies:
Selects the freely programmable characteristic using p1300 = 3.
Refer to: p1310, p1311, p1317, p1319, p1320, p1321, p1322, p1323, p1324, p1325, p1326

Note: In the servo control mode the following applies:
Linear interpolation is carried-out between the points 0 Hz / p1319 and p1326 / p1327.
For closed-loop VECTOR control, the following applies:
Linear interpolation is carried-out between the points 0 Hz / p1310, p1320 / p1321 ... p1326 / p1327.
The voltage boost when accelerating (p1311) is also applied to the freely programmable V/Hz characteristic.

© Siemens AG, 2005. All rights reserved

p1330[0...n] CI: V/Hz control independent voltage setpoint / Uf U_set independ.

VECTOR	**Can be changed:** T		**Access level:** 3
	Data type: Unsigned32	**Data set:** CDS	**Function diagram:** -
	P-Group: V/f open-loop control	**Units group:** -	**Unit selection:** -
	Min	**Max**	**Factory setting**
	-	-	0

Description: Sets the signal source for the voltage setpoint for V/f control with an independent voltage setpoint (p1300 = 19).

Dependency: Selects the V/f control with independent voltage setpoint via p1300 = 19.
Refer to: p1300

p1335[0...n] Slip compensation, scaling / Slip comp scal

VECTOR	**Can be changed:** U, T		**Access level:** 2
	Data type: Floating Point	**Data set:** DDS	**Function diagram:** 1690, 6310
	P-Group: V/f open-loop control	**Units group:** PERCENT	**Unit selection:** -
	Min	**Max**	**Factory setting**
	0.0 [%]	600.0 [%]	0.0 [%]

Description: Sets the setpoint for slip compensation in [%] referred to r0330 (motor rated slip).
p1335 = 0.0 %: Slip compensation de-activated.
p1335 = 100.0 %: Slip is fully compensated.

Dependency: Prerequisite for a precise slip compensation for p1335 = 100 % are the precise motor parameters (p0350 ... p0360).
If the parameters are not precisely known, a precise compensation can be achieved by varying p1335.

Note: The purpose of slip compensation is to maintain a constant motor speed regardless of the applied load. The fact that the motor speed decreases with increasing load is a typical characteristic of induction motors.
For synchronous motors, this effect does not occur and the parameter has no effect in this case.
For the open-loop control modes p1300 = 5 and 6 (textile sector), the slip compensation is internally disabled in order to be able to precisely set the output frequency.

p1336[0...n] Slip compensation limit value / Slip comp lim val

VECTOR	**Can be changed:** U, T		**Access level:** 2
	Data type: Floating Point	**Data set:** DDS	**Function diagram:** 6310
	P-Group: V/f open-loop control	**Units group:** PERCENT	**Unit selection:** -
	Min	**Max**	**Factory setting**
	0.00 [%]	600.00 [%]	250.00 [%]

Description: Sets the limit value for slip compensation in [%] referred to r0330 (motor rated slip).

r1337 Actual slip compensation / Slip comp act.val.

VECTOR	**Can be changed:** -		**Access level:** 3
	Data type: Floating Point	**Data set:** -	**Function diagram:** 6310
	P-Group: V/f open-loop control	**Units group:** PERCENT	**Unit selection:** -
	Min	**Max**	**Factory setting**
	- [%]	- [%]	- [%]

Description: Displays the actual compensated slip [%] referred to r0330 (rated motor slip).

Dependency: p1335 > 0 %: Slip compensation active.
Refer to: p1335

© Siemens AG, 2005. All rights reserved

p1338[0...n] V/f mode resonance damping gain / Uf Res_damp gain

VECTOR	**Can be changed:** U, T		**Access level:** 3
	Data type: Floating Point	**Data set:** DDS	**Function diagram:** 1690, 6310
	P-Group: V/f open-loop control	**Units group:** -	**Unit selection:** -
	Min	**Max**	**Factory setting**
	0.00	100.00	0.00

Description: Sets the controller gain for resonance damping for V/f control.

Dependency: Refer to: p1300, p1339

Note: The resonance damping function dampens active current oscillations that frequency occur under no-load conditions.

The resonance damping is active in a range of approximately 5 ... 90 % of the rated motor frequency (p0310), but up to a maximum of 45 Hz.

For the open-loop control modes p1300 = 5 and 6 (textile sectors), the resonance damping is internally disabled in order that the output frequency can be precisely set.

p1339[0...n] V/f mode resonance damping filter time constant / Uf Res_damp T

VECTOR	**Can be changed:** U, T		**Access level:** 3
	Data type: Floating Point	**Data set:** DDS	**Function diagram:** 6310
	P-Group: V/f open-loop control	**Units group:** TIME_M3	**Unit selection:** -
	Min	**Max**	**Factory setting**
	1.00 [ms]	1000.00 [ms]	20.00 [ms]

Description: Sets the filter time constant of the controller for resonance damping with V/f control.

Dependency: Refer to: p1300, p1338

p1340[0...n] I_max frequency controller proportional gain / I_max_ctrl Kp

VECTOR	**Can be changed:** U, T		**Access level:** 3
	Data type: Floating Point	**Data set:** DDS	**Function diagram:** 1690
	P-Group: V/f open-loop control	**Units group:** -	**Unit selection:** -
	Min	**Max**	**Factory setting**
	0.000	0.500	0.000

Description: Proportional gain of the I_max voltage controller.

The I_max controller reduces the drive converter/inverter output current if the maximum current (r0067) is exceeded.

In the V/f operating modes (refer to p1300) for the I_max control, one controller is used that acts on the output frequency and one controller that acts on the output voltage. The frequency controller reduces the current by decreasing the converter output frequency. The frequency is reduced down to a minimum value (equaling twice rated slip). If the overcurrent condition cannot be successfully resolved using this measure, then the drive converter output voltage is reduced using the I_max voltage controller. Once the overcurrent condition has been resolved, the drive is accelerated along the ramp set in p1120 (ramp-up time).

Dependency: In the V/f modes (p1300) for textile applications and for external voltage setpoints, only the I_max voltage controller is used.

Notice: When de-activating the I_max controller, the following must be carefully observed:

When the maximum current (r0067) is exceeded, the output current is no longer reduced, however, overcurrent alarm messages are generated. The drive is shut down if the overcurrent limit (r0209) is exceeded.

Note: p1341 = 0: I_max frequency controller de-activated and I_max voltage controller activated over the complete speed range.

© Siemens AG, 2005. All rights reserved

p1341[0...n] I_max frequency controller integral action time / I_max_ctrl Tn

VECTOR	**Can be changed:** U, T		**Access level:** 3
	Data type: Floating Point	**Data set:** DDS	**Function diagram:** 1690
	P-Group: V/f open-loop control	**Units group:** TIME	**Unit selection:** -
	Min	**Max**	**Factory setting**
	0.000 [s]	50.000 [s]	0.300 [s]

Description: Sets the integral action time for the I_max frequency controller.
Dependency: Refer to: p1340

r1343 I_max controller frequency output / I_max_ctrl f_outp

VECTOR	**Can be changed:** -		**Access level:** 3
	Data type: Floating Point	**Data set:** -	**Function diagram:** 1690
	P-Group: V/f open-loop control	**Units group:** SPEED_ROT	**Unit selection:** -
	Min	**Max**	**Factory setting**
	- [1/min]	- [1/min]	- [1/min]

Description: Displays the effective frequency limit.
Dependency: Refer to: p1340

r1344 I_max controller voltage output / I_max_ctrl U_outp

VECTOR	**Can be changed:** -		**Access level:** 3
	Data type: Floating Point	**Data set:** -	**Function diagram:** 1690
	P-Group: V/f open-loop control	**Units group:** VOLTAGE_AC_EFF	**Unit selection:** -
	Min	**Max**	**Factory setting**
	- [Veff]	- [Veff]	- [Veff]

Description: Displays the amount by which the converter output voltage is reduced.
Dependency: Refer to: p1340

p1345[0...n] I_max voltage controller proportional gain / I_max_U_ctrl Kp

VECTOR	**Can be changed:** U, T		**Access level:** 3
	Data type: Floating Point	**Data set:** DDS	**Function diagram:** 1690
	P-Group: V/f open-loop control	**Units group:** -	**Unit selection:** -
	Min	**Max**	**Factory setting**
	0.000	100000.000	0.000

Description: Sets the proportional gain for the I_max voltage controller.
Dependency: Refer to: p1340

p1346[0...n] I_max voltage controller integral action time / I_max_U_ctrl Tn

VECTOR	**Can be changed:** U, T		**Access level:** 3
	Data type: Floating Point	**Data set:** DDS	**Function diagram:** 1690
	P-Group: V/f open-loop control	**Units group:** TIME	**Unit selection:** -
	Min	**Max**	**Factory setting**
	0.000 [s]	50.000 [s]	0.030 [s]

Description: Sets the integral action time for the I_max voltage controller.
Dependency: Refer to: p1340
Note: p1346 = 0: I_max voltage controller de-activated.

© Siemens AG, 2005. All rights reserved

p1350[0...n] Soft starting / Soft starting

VECTOR	**Can be changed:** U, T		**Access level:** 3
	Data type: Integer16	**Data set:** DDS	**Function diagram:** 1690
	P-Group: V/f open-loop control	**Units group:** -	**Unit selection:** -
	Min	**Max**	**Factory setting**
	0	1	0

Description: Sets whether the voltage is continuously increased during the magnetizing phase (p1350 = 1, On) or whether it jumps directly to the voltage boost (p1350 = 0, Off).

Values:
0: Off
1: On

Note: The settings for this parameter have the following advantages and disadvantages:
0 = off (jump directly to voltage boost)
Advantage: Flux is established quickly -> torque is quickly available
Disadvantage: The motor can move while it is being magnetized
1 = on (voltage is continually established)
Advantage: The motor is unlikely to rotate
Disadvantage: Flux establishes itself more slowly -> delay until torque is available

p1356[0...n] CI: V/f control, angular setpoint / Uf ang setpoint

VECTOR	**Can be changed:** U, T		**Access level:** 3
	Data type: Unsigned32	**Data set:** CDS	**Function diagram:** -
	P-Group: V/f open-loop control	**Units group:** -	**Unit selection:** -
	Min	**Max**	**Factory setting**
	-	-	0

Description: Sets the signal source for the differential angular generation for V/f control.

p1358[0...n] Angular difference, balancing, actual angle / Bal act angle

VECTOR	**Can be changed:** U, T		**Access level:** 3
	Data type: Floating Point	**Data set:** DDS	**Function diagram:** -
	P-Group: V/f open-loop control	**Units group:** -	**Unit selection:** -
	Min	**Max**	**Factory setting**
	0	1	0

Description: Sets the deadtime for the balancing of the actual angle value for the differential angular generation.
The selected multiplier refers to the current controller clock cycle (deadtime= p1358 * p0115[0]).

r1359 CO: Angular difference / Angular difference

VECTOR	**Can be changed:** -		**Access level:** 3
	Data type: Floating Point	**Data set:** -	**Function diagram:** -
	P-Group: V/f open-loop control	**Units group:** ANGLE	**Unit selection:** -
	Min	**Max**	**Factory setting**
	- [°]	- [°]	- [°]

Description: Displays the output of the differential angular generation.

Note: The difference between the setpoint angle, read-in in p1356 and the actual value of the V/f control delayed with p1358 is displayed.

© Siemens AG, 2005. All rights reserved

p1400[0...n] Speed control configuration / n_ctrl config

SERVO

Can be changed: U, T | **Access level:** 2

Data type: Unsigned16 | **Data set:** DDS | **Function diagram:** 1590, 5490

P-Group: Closed-loop control | **Units group:** - | **Unit selection:** -

Min	Max	Factory setting
0000 bin	1111 1111 1111 1111 bin	0000 0011 1010 0000 bin

Description: Sets the configuration for the speed/velocity control.

Bit field:

Bit	Signal name	0 signal	1 signal	FP
04	Torque limiting motoring/regenerating active	No	Yes	-
05	Kp/Tn adaptation active	No	Yes	-
07	Interpolation speed controller pre-control active	No	Yes	-
08	Interpolation torque setpoint active	No	Yes	-
09	Damping for sensorless open-loop controlled oper.	No	Yes	-
10	Speed pre-control	For setp_filter 2	For balancing	-
11	Sensorless oper. speed actual value starting value	0.0	Setpoint	-
12	Sensorless operation changeover	When accelerating	Steady-state	-
13	Motor/generator dependent on	Actual speed value	Speed setpoint	-

Note: Re bit 07:

The interpolator is only effective for clock-cycle synchronous PROFIBUS operation and has, when the dynamic servo control (DSC) is active, and additional deadtime of one speed controller clock cycle.

p1400[0...n] Velocity control, configuration / n_ctrl config

SERVO (Lin)

Can be changed: U, T | **Access level:** 2

Data type: Unsigned16 | **Data set:** DDS | **Function diagram:** 1590, 5490

P-Group: Closed-loop control | **Units group:** - | **Unit selection:** -

Min	Max	Factory setting
0000 bin	1111 1111 1111 1111 bin	0000 0011 1010 0000 bin

Description: Sets the configuration for the speed/velocity control.

Bit field:

Bit	Signal name	0 signal	1 signal	FP
04	Torque limiting motoring/regenerating active	No	Yes	-
05	Kp/Tn adaptation active	No	Yes	-
07	Interpolation speed controller pre-control active	No	Yes	-
08	Interpolation torque setpoint active	No	Yes	-
09	Damping for sensorless open-loop controlled oper.	No	Yes	-
10	Speed pre-control	For setp_filter 2	For balancing	-
11	Sensorless oper. speed actual value starting value	0.0	Setpoint	-
12	Sensorless operation changeover	When accelerating	Steady-state	-
13	Motor/generator dependent on	Actual speed value	Speed setpoint	-

Note: Re bit 07:

The interpolator is only effective for clock-cycle synchronous PROFIBUS operation and has, when the dynamic servo control (DSC) is active, and additional deadtime of one speed controller clock cycle.

© Siemens AG, 2005. All rights reserved

p1400[0...n] Speed control configuration / n_ctrl config

VECTOR (n/M)

Can be changed: U, T | **Access level:** 2
Data type: Unsigned16 | **Data set:** DDS | **Function diagram:** 6490
P-Group: Closed-loop control | **Units group:** - | **Unit selection:** -

Min	Max	Factory setting
0000 bin	1111 1111 1111 1111 bin	1000 0000 0010 0001 bin

Description: Sets the configuration for the closed-loop speed control.

Bit field:

Bit	Signal name	0 signal	1 signal	FP
00	Automatic Kp/Tn adaptation active	No	Yes	-
01	Sensorless closed-loop VECTOR ctrl freeze I comp	No	Yes	-
02	Acceleration pre-control source	Internal (n_set)	External (p1495)	6031
03	Reference model speed setpoint, I component	Off	On	-
05	Kp/Tn adaptation active	No	Yes	-
06	Free Tn adaptation active	No	Yes	-
14	Torque pre-control	For n_ctrl enab	Always active	-
15	Sensorless closed-loop VECTOR ctrl speed prectrl	No	Yes	-

Note: Re bit 01:
When the bit is set, the I component of the speed controller is kept when changing into the open-loop controlled mode.

p1401[0...n] Flux control configuration / F_ctrl config

VECTOR (n/M)

Can be changed: U, T | **Access level:** 3
Data type: Unsigned16 | **Data set:** DDS | **Function diagram:** 6491, 6722
P-Group: Closed-loop control | **Units group:** - | **Unit selection:** -

Min	Max	Factory setting
0000 bin	0111 bin	0110 bin

Description: Sets the configuration for flux setpoint control

Bit field:

Bit	Signal name	0 signal	1 signal	FP
00	Flux setpoint soft starting active	No	Yes	-
01	Flux setpoint differentiation active	No	Yes	-
02	Flux build-up control active	No	Yes	-

p1402[0...n] Closed-loop current control and motor model configuration / I_ctrl config

SERVO

Can be changed: T | **Access level:** 3
Data type: Unsigned16 | **Data set:** DDS | **Function diagram:** -
P-Group: Closed-loop control | **Units group:** - | **Unit selection:** -

Min	Max	Factory setting
0000 bin	0010 bin	0000 bin

Description: Sets the configuration for the closed-loop control and the motor model.

Bit field:

Bit	Signal name	0 signal	1 signal	FP
01	Park encoder for n_act > p1404	No	Yes	-

Dependency: Refer to: r0487, p1404

Note: Re bit 1:
When the bit is set, the encoder is parked as soon as the actual speed is greater than the changeover speed (p1404). The encoder state is displayed in r487.14.

© Siemens AG, 2005. All rights reserved

p1402[0...n] Closed-loop current control and motor model configuration / I_ctrl config

VECTOR (n/M)

Can be changed: U, T			**Access level:** 3
Data type: Unsigned16	**Data set:** DDS		**Function diagram:** -
P-Group: Closed-loop control	**Units group:** -		**Unit selection:** -
Min	**Max**		**Factory setting**
0000 bin	0001 bin		0001 bin

Description: Sets the configuration for the closed-loop control and the motor model.

Bit field:

Bit	Signal name	0 signal	1 signal	FP
00	Speed-following error correction active	No	Yes	-

Note: Re bit 01:

When the bit is set, the speed following error is compensated that is obtained as a result of the smoothing time constant in p1441.

p1404[0...n] Sensorless operation changeover speed / Sensorl op n_chgov

SERVO

Can be changed: T		**Access level:** 3
Data type: Floating Point	**Data set:** DDS	**Function diagram:** 1590, 5060
P-Group: Closed-loop control	**Units group:** SPEED_ROT	**Unit selection:** -
Min	**Max**	**Factory setting**
0.0 [1/min]	210000.0 [1/min]	210000.0 [1/min]

Description: Sets the speed/velocity to change over between operation with and without encoder. Above this speed/velocity, the drive system is automatically operated in the sensorless mode.

Note: The changeover speed applies when changing over between operation with and without encoder.

Separate speed controllers should be set when operating with and without encoder.

Operation with encoder: p1460 (Kp), p1462 (Tn), p1461, p1463, p1457, p1458 (parameters for speed controller adaptation)

Operation without encoder (sensorless operation): p1470 (Kp), p1472 (Tn)

p1404[0...n] Sensorless operation changeover velocity / Sensorl op n_chgov

SERVO (Lin)

Can be changed: T		**Access level:** 3
Data type: Floating Point	**Data set:** DDS	**Function diagram:** 1590, 5060
P-Group: Closed-loop control	**Units group:** SPEED_LIN_METRIC_P3	**Unit selection:** -
Min	**Max**	**Factory setting**
0.0 [m/min]	1000.0 [m/min]	1000.0 [m/min]

Description: Sets the speed/velocity to change over between operation with and without encoder. Above this speed/velocity, the drive system is automatically operated in the sensorless mode.

Note: The changeover speed applies when changing over between operation with and without encoder.

Separate speed controllers should be set when operating with and without encoder.

Operation with encoder: p1460 (Kp), p1462 (Tn), p1461, p1463, p1457, p1458 (parameters for speed controller adaptation)

Operation without encoder (sensorless operation): p1470 (Kp), p1472 (Tn)

© Siemens AG, 2005. All rights reserved

r1406 CO/BO: Control word speed controller / STW n_ctrl

SERVO

Can be changed: - **Access level:** 3

Data type: Unsigned16 **Data set:** - **Function diagram:** 1530, 2520

P-Group: Closed-loop control **Units group:** - **Unit selection:** -

Min	Max	Factory setting
-	-	-

Description: Displays the control word of the speed/velocity controller.

Bit field:

Bit	Signal name	0 signal	1 signal	FP
08	Travel to fixed endstop active	No	Yes	-
12	Torque control active	No	Yes	-

r1406 CO/BO: Control word, velocity controller / STW n_ctrl

SERVO (Lin)

Can be changed: - **Access level:** 3

Data type: Unsigned16 **Data set:** - **Function diagram:** 1530, 2520

P-Group: Closed-loop control **Units group:** - **Unit selection:** -

Min	Max	Factory setting
-	-	-

Description: Displays the control word of the speed/velocity controller.

Bit field:

Bit	Signal name	0 signal	1 signal	FP
08	Travel to fixed endstop active	No	Yes	-
12	Torque control active	No	Yes	-

r1406 CO/BO: Control word speed controller / STW n_ctrl

VECTOR (n/M)

Can be changed: - **Access level:** 3

Data type: Unsigned16 **Data set:** - **Function diagram:** -

P-Group: Closed-loop control **Units group:** - **Unit selection:** -

Min	Max	Factory setting
-	-	-

Description: Displays the control word of the speed controller.

Bit field:

Bit	Signal name	0 signal	1 signal	FP
04	Holds speed controller I component	No	Yes	-
05	Sets speed controller I component	No	Yes	-
11	Enables droop	No	Yes	6030
12	Torque control active	No	Yes	-

r1407 CO/BO: Status word speed controller / ZSW n_ctrl

SERVO

Can be changed: - **Access level:** 3

Data type: Unsigned16 **Data set:** - **Function diagram:** 1530, 2522

P-Group: Closed-loop control **Units group:** - **Unit selection:** -

Min	Max	Factory setting
-	-	-

Description: Displays the status word of the speed/velocity controller.

© Siemens AG, 2005. All rights reserved

Bit field:	Bit	Signal name	0 signal	1 signal	FP
	00	V/f control active	No	Yes	-
	01	Sensorless operation active	No	Yes	-
	02	Torque control active	No	Yes	-
	04	DSC active	No	Yes	-
	05	Speed controller I component held	No	Yes	-
	06	Speed controller I component set	No	Yes	-
	07	Torq limit reached	No	Yes	5610
	08	Upper torque limit active	No	Yes	5610
	09	Lower torque limit active	No	Yes	5610
	11	Speed setpoint limited	No	Yes	-
	13	Sensorless operation due to a fault	No	Yes	-

r1407 CO/BO: Status word, velocity controller / ZSW n_ctrl

SERVO (Lin)

Can be changed: - **Access level:** 3

Data type: Unsigned16 **Data set:** - **Function diagram:** 1530, 2522

P-Group: Closed-loop control **Units group:** - **Unit selection:** -

Min	Max	Factory setting
-	-	-

Description: Displays the status word of the speed/velocity controller.

Bit field:	Bit	Signal name	0 signal	1 signal	FP
	00	V/f control active	No	Yes	-
	01	Sensorless operation active	No	Yes	-
	02	Torque control active	No	Yes	-
	04	DSC active	No	Yes	-
	05	Speed controller I component held	No	Yes	-
	06	Speed controller I component set	No	Yes	-
	07	Torq limit reached	No	Yes	5610
	08	Upper torque limit active	No	Yes	5610
	09	Lower torque limit active	No	Yes	5610
	11	Speed setpoint limited	No	Yes	-
	13	Sensorless operation due to a fault	No	Yes	-

r1407 CO/BO: Status word speed controller / ZSW n_ctrl

VECTOR (n/M)

Can be changed: - **Access level:** 3

Data type: Unsigned16 **Data set:** - **Function diagram:** 1530, 2522

P-Group: Closed-loop control **Units group:** - **Unit selection:** -

Min	Max	Factory setting
-	-	-

Description: Displays the status word of the speed controller.

Bit field:	Bit	Signal name	0 signal	1 signal	FP
	00	V/f control active	No	Yes	-
	01	Sensorless operation active	No	Yes	-
	02	Torque control active	No	Yes	6030
	03	Speed control active	No	Yes	6040
	05	Speed controller I component held	No	Yes	6040
	06	Speed controller I component set	No	Yes	6040
	07	Torq limit reached	No	Yes	6060
	08	Upper torque limit active	No	Yes	-
	09	Lower torque limit active	No	Yes	-
	10	Droop enabled	No	Yes	6030
	11	Speed setpoint limited	No	Yes	6030
	12	Ramp-function generator set	No	Yes	-
	13	Sensorless operation due to a fault	No	Yes	-

© Siemens AG, 2005. All rights reserved

r1408 CO/BO: Closed-loop control status word 3 / Control ZSW3

SERVO

Can be changed: -
Access level: 3
Data type: Unsigned16
Data set: -
Function diagram: 5040, 5493
P-Group: Closed-loop control
Units group: -
Unit selection: -

Min	Max	Factory setting
-	-	-

Description: Displays closed-loop control status word 3 (closed-loop control STW3).

Bit field:

Bit	Signal name	0 signal	1 signal	FP
00	Cl-loop curr ctrl	Not active	active	-
04	Limit Vd	Not active	active	-
05	Limit Vq	Not active	active	-
06	Positive limiting Iq	Not active	active	-
07	Negative limiting Iq	Not active	active	-
08	Limit iq_set	Not active	active	-
09	Limit id_set	Not active	active	-

Note: The selected current limit is taken into account by the upstream torque limiting; this is the reason that bits 6, 7 and 8 are only set for overshoots due to the current setpoint filter.

r1408 CO/BO: Closed-loop control status word 3 / Control ZSW3

VECTOR (n/M)

Can be changed: -
Access level: 3
Data type: Unsigned16
Data set: -
Function diagram: 6493
P-Group: Closed-loop control
Units group: -
Unit selection: -

Min	Max	Factory setting
-	-	-

Description: Displays closed-loop control status word 3 (closed-loop control STW3).

Bit field:

Bit	Signal name	0 signal	1 signal	FP
00	Current ctrl act	Not active	active	-
01	Id control, I-component limiting	Not active	active	-
03	Voltage limiting	Not active	active	-
10	Speed adaptation, limiting	Not active	active	-
11	Speed adaptation, speed deviation	In tolerance	Out tolerance	6719
12	Motor stalled	No	Yes	6719

p1412[0...n] Speed setpoint filter, deadtime / n_set deadtime

TM41

Can be changed: U, T
Access level: 3
Data type: Floating Point
Data set: DDS
Function diagram: 9674
P-Group: Closed-loop control
Units group: TIME_M3
Unit selection: -

Min	Max	Factory setting
0.000 [ms]	1.000 [ms]	0.000 [ms]

Description: Sets the delay of the speed setpoint for the incremental encoder emulation.

p1414[0...n] Speed setpoint filter activation / n_set_filt active

SERVO

Can be changed: U, T
Access level: 3
Data type: Unsigned16
Data set: DDS
Function diagram: 5020
P-Group: Closed-loop control
Units group: -
Unit selection: -

Min	Max	Factory setting
0000 bin	0011 bin	0000 bin

Description: Activates the speed /velocity setpoint filters 1 and 2.

Recommendation: If only one filter is required, filter 1 should be activated and filter 2 deactivated, to avoid excessive processing time.

© Siemens AG, 2005. All rights reserved

Bit field:	Bit	Signal name	0 signal	1 signal	FP
	00	Activate filter 1	No	Yes	-
	01	Activate filter 2	No	Yes	-

Dependency: The speed setpoint filter is parameterized using p1415 ... p1420 and p1421 ... p1426.

p1414[0...n] Velocity setpoint filter activation / n_set_filt active

SERVO (Lin)

Can be changed: U, T			**Access level:** 3
Data type: Unsigned16	**Data set:** DDS		**Function diagram:** 5020
P-Group: Closed-loop control	**Units group:** -		**Unit selection:** -
Min	**Max**		**Factory setting**
0000 bin	0011 bin		0000 bin

Description: Activates the speed /velocity setpoint filters 1 and 2.

Recommendation: If only one filter is required, filter 1 should be activated and filter 2 deactivated, to avoid excessive processing time.

Bit field:	Bit	Signal name	0 signal	1 signal	FP
	00	Activate filter 1	No	Yes	-
	01	Activate filter 2	No	Yes	-

Dependency: The speed setpoint filter is parameterized using p1415 ... p1420 and p1421 ... p1426.

p1414[0...n] Speed setpoint filter activation / n_set_filt active

TM41

Can be changed: U, T			**Access level:** 3
Data type: Unsigned16	**Data set:** DDS		**Function diagram:** 9674
P-Group: Closed-loop control	**Units group:** -		**Unit selection:** -
Min	**Max**		**Factory setting**
0000 bin	0001 bin		0000 bin

Description: Activates speed setpoint filter 1 for the incremental encoder emulation.

Bit field:	Bit	Signal name	0 signal	1 signal	FP
	00	Activate filter 1	No	Yes	9674

Dependency: The speed setpoint filter can be parameterized using p1417 and p1418.
Refer to: p1417, p1418

p1415[0...n] Speed setpoint filter 1 type / n_set_filt 1 typ

SERVO

Can be changed: U, T			**Access level:** 3
Data type: Integer16	**Data set:** DDS		**Function diagram:** 5020
P-Group: Closed-loop control	**Units group:** -		**Unit selection:** -
Min	**Max**		**Factory setting**
0	2		0

Description: Sets the type for the speed/velocity setpoint filter 1.

Values:
0: Low pass: PT1
1: Low pass: PT2
2: General 2nd-order filter

Dependency: PT1 low pass: p1416
PT2 low pass: p1417, p1418
General filter: p1417 - p1420

© Siemens AG, 2005. All rights reserved

p1415[0...n] Velocity setpoint filter 1 type / n_set_filt 1 typ

SERVO (Lin)

Can be changed: U, T		**Access level:** 3
Data type: Integer16	**Data set:** DDS	**Function diagram:** 5020
P-Group: Closed-loop control	**Units group:** -	**Unit selection:** -
Min	**Max**	**Factory setting**
0	2	0

Description: Sets the type for the speed/velocity setpoint filter 1.

Values:
0: Low pass: PT1
1: Low pass: PT2
2: General 2nd-order filter

Dependency: PT1 low pass: p1416
PT2 low pass: p1417, p1418
General filter: p1417 - p1420

p1416[0...n] Speed setpoint filter 1 time constant / n_set_filt 1 T

SERVO, VECTOR (n/M)

Can be changed: U, T		**Access level:** 3
Data type: Floating Point	**Data set:** DDS	**Function diagram:** 5020, 6030
P-Group: Closed-loop control	**Units group:** TIME_M3	**Unit selection:** -
Min	**Max**	**Factory setting**
0.00 [ms]	5000.00 [ms]	0.00 [ms]

Description: Sets the time constant for the speed/velocity setpoint filter 1 (PT1).

Dependency: Refer to: p1414, p1415

Note: For SERVO (p0107) the following applies:
This parameter is only effective if the speed filter is set as a PT1 low pass.

p1416[0...n] Velocity setpoint filter 1 time constant / n_set_filt 1 T

SERVO (Lin)

Can be changed: U, T		**Access level:** 3
Data type: Floating Point	**Data set:** DDS	**Function diagram:** 5020, 6030
P-Group: Closed-loop control	**Units group:** TIME_M3	**Unit selection:** -
Min	**Max**	**Factory setting**
0.00 [ms]	5000.00 [ms]	0.00 [ms]

Description: Sets the time constant for the speed/velocity setpoint filter 1 (PT1).

Dependency: Refer to: p1414, p1415

Note: For SERVO (p0107) the following applies:
This parameter is only effective if the speed filter is set as a PT1 low pass.

p1417[0...n] Speed setpoint filter 1 denominator natural frequency / n_set_filt 1 fn_n

SERVO

Can be changed: U, T		**Access level:** 3
Data type: Floating Point	**Data set:** DDS	**Function diagram:** 5020
P-Group: Closed-loop control	**Units group:** FREQUENCY	**Unit selection:** -
Min	**Max**	**Factory setting**
0.5 [Hz]	16000.0 [Hz]	2000.0 [Hz]

Description: Sets the denominator natural frequency for the speed/velocity setpoint filter 1 (PT2, general filter).

Dependency: Refer to: p1414, p1415

Note: This parameter is only effective if the speed filter is parameterized as a PT2 low pass or as general filter.
The filter is only effective if the natural frequency is less than half of the sampling frequency.

© Siemens AG, 2005. All rights reserved

p1417[0...n] Velocity setpoint filter 1 denominator natural frequency / n_set_filt 1 fn_n

SERVO (Lin)	**Can be changed:** U, T		**Access level:** 3
	Data type: Floating Point	**Data set:** DDS	**Function diagram:** 5020
	P-Group: Closed-loop control	**Units group:** FREQUENCY	**Unit selection:** -
	Min	**Max**	**Factory setting**
	0.5 [Hz]	16000.0 [Hz]	2000.0 [Hz]

Description: Sets the denominator natural frequency for the speed/velocity setpoint filter 1 (PT2, general filter).
Dependency: Refer to: p1414, p1415
Note: This parameter is only effective if the speed filter is parameterized as a PT2 low pass or as general filter.
The filter is only effective if the natural frequency is less than half of the sampling frequency.

p1417[0...n] Speed setpoint filter 1 denominator natural frequency / n_set_filt 1 fn_n

TM41	**Can be changed:** U, T		**Access level:** 3
	Data type: Floating Point	**Data set:** DDS	**Function diagram:** 9674
	P-Group: Closed-loop control	**Units group:** FREQUENCY	**Unit selection:** -
	Min	**Max**	**Factory setting**
	0.5 [Hz]	16000.0 [Hz]	2000.0 [Hz]

Description: Sets the denominator natural frequency for the speed setpoint filter 1 (PT2) of the incremental encoder emulation.
Dependency: Refer to: p1414
Note: This parameter is only effective if the speed setpoint filter in p1414 is activated.
The filter is only effective if the natural frequency is less than half of the sampling frequency.

p1418[0...n] Speed setpoint filter 1 denominator damping / n_set_filt 1 D_n

SERVO	**Can be changed:** U, T		**Access level:** 3
	Data type: Floating Point	**Data set:** DDS	**Function diagram:** 5020
	P-Group: Closed-loop control	**Units group:** -	**Unit selection:** -
	Min	**Max**	**Factory setting**
	0.050	10.000	0.700

Description: Sets the denominator damping for the speed/velocity setpoint filter 1 (PT2, general filter).
Dependency: Refer to: p1414, p1415
Note: This parameter is only effective if the speed filter is parameterized as a PT2 low pass or as general filter.

p1418[0...n] Velocity setpoint filter 1 denominator damping / n_set_filt 1 D_n

SERVO (Lin)	**Can be changed:** U, T		**Access level:** 3
	Data type: Floating Point	**Data set:** DDS	**Function diagram:** 5020
	P-Group: Closed-loop control	**Units group:** -	**Unit selection:** -
	Min	**Max**	**Factory setting**
	0.050	10.000	0.700

Description: Sets the denominator damping for the speed/velocity setpoint filter 1 (PT2, general filter).
Dependency: Refer to: p1414, p1415
Note: This parameter is only effective if the speed filter is parameterized as a PT2 low pass or as general filter.

© Siemens AG, 2005. All rights reserved

p1418[0...n] Speed setpoint filter 1 denominator damping / n_set_filt 1 D_n

TM41	**Can be changed:** U, T		**Access level:** 3
	Data type: Floating Point	**Data set:** DDS	**Function diagram:** 9674
	P-Group: Closed-loop control	**Units group:** -	**Unit selection:** -
	Min	**Max**	**Factory setting**
	0.050	1.000	0.700

Description: Sets the denominator damping for the speed setpoint filter 1 (PT2) of the incremental encoder emulation.
Dependency: Refer to: p1414
Note: This parameter is only effective if the speed setpoint filter in p1414 is activated.

p1419[0...n] Speed setpoint filter 1 numerator natural frequency / n_set_filt 1 fn_z

SERVO	**Can be changed:** U, T		**Access level:** 3
	Data type: Floating Point	**Data set:** DDS	**Function diagram:** 5020
	P-Group: Closed-loop control	**Units group:** FREQUENCY	**Unit selection:** -
	Min	**Max**	**Factory setting**
	0.5 [Hz]	16000.0 [Hz]	2000.0 [Hz]

Description: Sets the numerator natural frequency for the speed/velocity setpoint filter 1 (general filter).
Dependency: Refer to: p1414, p1415
Note: This parameter is only effective if the speed filter is set as a general filter.
The filter is only effective if the natural frequency is less than half of the sampling frequency.

p1419[0...n] Velocity setpoint filter 1 numerator natural frequency / n_set_filt 1 fn_z

SERVO (Lin)	**Can be changed:** U, T		**Access level:** 3
	Data type: Floating Point	**Data set:** DDS	**Function diagram:** 5020
	P-Group: Closed-loop control	**Units group:** FREQUENCY	**Unit selection:** -
	Min	**Max**	**Factory setting**
	0.5 [Hz]	16000.0 [Hz]	2000.0 [Hz]

Description: Sets the numerator natural frequency for the speed/velocity setpoint filter 1 (general filter).
Dependency: Refer to: p1414, p1415
Note: This parameter is only effective if the speed filter is set as a general filter.
The filter is only effective if the natural frequency is less than half of the sampling frequency.

p1420[0...n] Speed setpoint filter 1 numerator damping / n_set_filt 1 D_z

SERVO	**Can be changed:** U, T		**Access level:** 3
	Data type: Floating Point	**Data set:** DDS	**Function diagram:** 5020
	P-Group: Closed-loop control	**Units group:** -	**Unit selection:** -
	Min	**Max**	**Factory setting**
	0.000	10.000	0.700

Description: Sets the numerator damping for the speed/velocity setpoint filter 1 (general filter).
Dependency: Refer to: p1414, p1415
Note: This parameter is only effective if the speed filter is set as a general filter.

© Siemens AG, 2005. All rights reserved

p1420[0...n] Velocity setpoint filter 1 numerator damping / n_set_filt 1 D_z

SERVO (Lin)	**Can be changed:** U, T		**Access level:** 3
	Data type: Floating Point	**Data set:** DDS	**Function diagram:** 5020
	P-Group: Closed-loop control	**Units group:** -	**Unit selection:** -
	Min	**Max**	**Factory setting**
	0.000	10.000	0.700

Description: Sets the numerator damping for the speed/velocity setpoint filter 1 (general filter).
Dependency: Refer to: p1414, p1415
Note: This parameter is only effective if the speed filter is set as a general filter.

p1421[0...n] Speed setpoint filter 2 type / n_set_filt 2 typ

SERVO	**Can be changed:** U, T		**Access level:** 3
	Data type: Integer16	**Data set:** DDS	**Function diagram:** 5020
	P-Group: Closed-loop control	**Units group:** -	**Unit selection:** -
	Min	**Max**	**Factory setting**
	0	2	0

Description: Sets the type for the speed/velocity setpoint filter 2.
Values:
0: Low pass: PT1
1: Low pass: PT2
2: General 2nd-order filter
Dependency: PT1 low pass: p1422
PT2 low pass: p1423, p1424
General filter: p1423 - p1426

p1421[0...n] Velocity setpoint filter 2 type / n_set_filt 2 typ

SERVO (Lin)	**Can be changed:** U, T		**Access level:** 3
	Data type: Integer16	**Data set:** DDS	**Function diagram:** 5020
	P-Group: Closed-loop control	**Units group:** -	**Unit selection:** -
	Min	**Max**	**Factory setting**
	0	2	0

Description: Sets the type for the speed/velocity setpoint filter 2.
Values:
0: Low pass: PT1
1: Low pass: PT2
2: General 2nd-order filter
Dependency: PT1 low pass: p1422
PT2 low pass: p1423, p1424
General filter: p1423 - p1426

p1422[0...n] Speed setpoint filter 2 time constant / n_set_filt 2 T

SERVO	**Can be changed:** U, T		**Access level:** 3
	Data type: Floating Point	**Data set:** DDS	**Function diagram:** 5020
	P-Group: Closed-loop control	**Units group:** TIME_M3	**Unit selection:** -
	Min	**Max**	**Factory setting**
	0.00 [ms]	5000.00 [ms]	0.00 [ms]

Description: Sets the time constant for the speed/velocity setpoint filter 2 (PT1).
Dependency: Refer to: p1414, p1421
Note: This parameter is only effective if the speed filter is set as a PT1 low pass.

© Siemens AG, 2005. All rights reserved

p1422[0...n] Velocity setpoint filter 2 time constant / n_set_filt 2 T

SERVO (Lin)

Can be changed: U, T		**Access level:** 3
Data type: Floating Point	**Data set:** DDS	**Function diagram:** 5020
P-Group: Closed-loop control	**Units group:** TIME_M3	**Unit selection:** -
Min	**Max**	**Factory setting**
0.00 [ms]	5000.00 [ms]	0.00 [ms]

Description: Sets the time constant for the speed/velocity setpoint filter 2 (PT1).
Dependency: Refer to: p1414, p1421
Note: This parameter is only effective if the speed filter is set as a PT1 low pass.

p1423[0...n] Speed setpoint filter 2 denominator natural frequency / n_set_filt 2 fn_n

SERVO

Can be changed: U, T		**Access level:** 3
Data type: Floating Point	**Data set:** DDS	**Function diagram:** 5020
P-Group: Closed-loop control	**Units group:** FREQUENCY	**Unit selection:** -
Min	**Max**	**Factory setting**
0.5 [Hz]	16000.0 [Hz]	2000.0 [Hz]

Description: Sets the denominator natural frequency for the speed/velocity setpoint filter 2 (PT2, general filter).
Dependency: Refer to: p1414, p1421
Note: This parameter is only effective if the speed filter is parameterized as a PT2 low pass or as general filter.
The filter is only effective if the natural frequency is less than half of the sampling frequency.

p1423[0...n] Velocity setpoint filter 2 denominator natural frequency / n_set_filt 2 fn_n

SERVO (Lin)

Can be changed: U, T		**Access level:** 3
Data type: Floating Point	**Data set:** DDS	**Function diagram:** 5020
P-Group: Closed-loop control	**Units group:** FREQUENCY	**Unit selection:** -
Min	**Max**	**Factory setting**
0.5 [Hz]	16000.0 [Hz]	2000.0 [Hz]

Description: Sets the denominator natural frequency for the speed/velocity setpoint filter 2 (PT2, general filter).
Dependency: Refer to: p1414, p1421
Note: This parameter is only effective if the speed filter is parameterized as a PT2 low pass or as general filter.
The filter is only effective if the natural frequency is less than half of the sampling frequency.

p1424[0...n] Speed setpoint filter 2 denominator damping / n_set_filt 2 D_n

SERVO

Can be changed: U, T		**Access level:** 3
Data type: Floating Point	**Data set:** DDS	**Function diagram:** 5020
P-Group: Closed-loop control	**Units group:** -	**Unit selection:** -
Min	**Max**	**Factory setting**
0.050	10.000	0.700

Description: Sets the denominator damping for the speed/velocity setpoint filter 2 (PT2, general filter).
Dependency: Refer to: p1414, p1421
Note: This parameter is only effective if the speed filter is parameterized as a PT2 low pass or as general filter.

© Siemens AG, 2005. All rights reserved

p1424[0...n] Velocity setpoint filter 2 denominator damping / n_set_filt 2 D_n

SERVO (Lin)	**Can be changed:** U, T		**Access level:** 3
	Data type: Floating Point	**Data set:** DDS	**Function diagram:** 5020
	P-Group: Closed-loop control	**Units group:** -	**Unit selection:** -
	Min	**Max**	**Factory setting**
	0.050	10.000	0.700

Description: Sets the denominator damping for the speed/velocity setpoint filter 2 (PT2, general filter).
Dependency: Refer to: p1414, p1421
Note: This parameter is only effective if the speed filter is parameterized as a PT2 low pass or as general filter.

p1425[0...n] Speed setpoint filter 2 numerator natural frequency / n_set_filt 2 fn_z

SERVO	**Can be changed:** U, T		**Access level:** 3
	Data type: Floating Point	**Data set:** DDS	**Function diagram:** 5020
	P-Group: Closed-loop control	**Units group:** FREQUENCY	**Unit selection:** -
	Min	**Max**	**Factory setting**
	0.5 [Hz]	16000.0 [Hz]	2000.0 [Hz]

Description: Sets the numerator natural frequency for the speed/velocity setpoint filter 2 (general filter).
Dependency: Refer to: p1414, p1421
Note: This parameter is only effective if the speed filter is set as a general filter.
The filter is only effective if the natural frequency is less than half of the sampling frequency.

p1425[0...n] Velocity setpoint filter 2 numerator natural frequency / n_set_filt 2 fn_z

SERVO (Lin)	**Can be changed:** U, T		**Access level:** 3
	Data type: Floating Point	**Data set:** DDS	**Function diagram:** 5020
	P-Group: Closed-loop control	**Units group:** FREQUENCY	**Unit selection:** -
	Min	**Max**	**Factory setting**
	0.5 [Hz]	16000.0 [Hz]	2000.0 [Hz]

Description: Sets the numerator natural frequency for the speed/velocity setpoint filter 2 (general filter).
Dependency: Refer to: p1414, p1421
Note: This parameter is only effective if the speed filter is set as a general filter.
The filter is only effective if the natural frequency is less than half of the sampling frequency.

p1426[0...n] Speed setpoint filter 2 numerator damping / n_set_filt 2 D_z

SERVO	**Can be changed:** U, T		**Access level:** 3
	Data type: Floating Point	**Data set:** DDS	**Function diagram:** 5020
	P-Group: Closed-loop control	**Units group:** -	**Unit selection:** -
	Min	**Max**	**Factory setting**
	0.000	10.000	0.700

Description: Sets the numerator damping for the speed/velocity setpoint filter 2 (general filter).
Dependency: Refer to: p1414, p1421
Note: This parameter is only effective if the speed filter is set as a general filter.

© Siemens AG, 2005. All rights reserved

p1426[0...n] Velocity setpoint filter 2 numerator damping / n_set_filt 2 D_z

SERVO (Lin)	**Can be changed:** U, T		**Access level:** 3
	Data type: Floating Point	**Data set:** DDS	**Function diagram:** 5020
	P-Group: Closed-loop control	**Units group:** -	**Unit selection:** -
	Min	**Max**	**Factory setting**
	0.000	10.000	0.700

Description: Sets the numerator damping for the speed/velocity setpoint filter 2 (general filter).

Dependency: Refer to: p1414, p1421

Note: This parameter is only effective if the speed filter is set as a general filter.

p1428[0...n] Speed pre-control balancing deadtime / n_pre bal t_dead

SERVO, VECTOR (n/M)	**Can be changed:** U, T		**Access level:** 3
	Data type: Floating Point	**Data set:** DDS	**Function diagram:** 5030, 6031
	P-Group: Closed-loop control	**Units group:** -	**Unit selection:** -
	Min	**Max**	**Factory setting**
	0.0	2.0	0.0

Description: Sets the deadtime to balance the speed/velocity setpoint for active torque/force pre-control.

The selected multiplier refers to the speed/velocity controller clock cycle (deadtime= p1428 * p0115[1]).

Dependency: In conjunction with p1429, this parameter can simulate the characteristics of how the torque is established (dynamic response of closed current control loop).

For VECTOR (r0107) the following applies:

The parameter is only effective if the acceleration model is supplied using external acceleration signals (p1400.2 = 1). For p1400.2 = 0, a fixed deadtime is used.

Refer to: p1429, p1511

p1428[0...n] Velocity pre-control balancing deadtime / n_pre bal t_dead

SERVO (Lin)	**Can be changed:** U, T		**Access level:** 3
	Data type: Floating Point	**Data set:** DDS	**Function diagram:** 5030, 6031
	P-Group: Closed-loop control	**Units group:** -	**Unit selection:** -
	Min	**Max**	**Factory setting**
	0.0	2.0	0.0

Description: Sets the deadtime to balance the speed/velocity setpoint for active torque/force pre-control.

The selected multiplier refers to the speed/velocity controller clock cycle (deadtime= p1428 * p0115[1]).

Dependency: In conjunction with p1429, this parameter can simulate the characteristics of how the torque is established (dynamic response of closed current control loop).

For VECTOR (r0107) the following applies:

The parameter is only effective if the acceleration model is supplied using external acceleration signals (p1400.2 = 1). For p1400.2 = 0, a fixed deadtime is used.

Refer to: p1429, p1511

© Siemens AG, 2005. All rights reserved

p1429[0...n] Speed pre-control balancing time constant / n_prectrl bal T

SERVO, VECTOR (n/M)

Can be changed: U, T		**Access level:** 3
Data type: Floating Point	**Data set:** DDS	**Function diagram:** 5030, 6031
P-Group: Closed-loop control	**Units group:** TIME_M3	**Unit selection:** -
Min	**Max**	**Factory setting**
0.00 [ms]	10000.00 [ms]	0.00 [ms]

Description: Sets the time constant (PT1) for balancing the speed/velocity setpoint for the active torque/force pre-control.

Dependency: In conjunction with p1428, this parameter can simulate the characteristics of how torque is established (dynamic response of the closed current control loop).

For VECTOR (r0107) the following applies:

The parameter is only effective if the acceleration model is supplied using external acceleration signals (p1400.2 = 1). For p1400.2 = 0, time constant p1442 (or p1452 for sensorless closed-loop VECTOR control) is used.

Refer to: p1428, p1511

p1429[0...n] Velocity pre-control balancing time constant / n_prectrl bal T

SERVO (Lin)

Can be changed: U, T		**Access level:** 3
Data type: Floating Point	**Data set:** DDS	**Function diagram:** 5030, 6031
P-Group: Closed-loop control	**Units group:** TIME_M3	**Unit selection:** -
Min	**Max**	**Factory setting**
0.00 [ms]	10000.00 [ms]	0.00 [ms]

Description: Sets the time constant (PT1) for balancing the speed/velocity setpoint for the active torque/force pre-control.

Dependency: In conjunction with p1428, this parameter can simulate the characteristics of how torque is established (dynamic response of the closed current control loop).

For VECTOR (r0107) the following applies:

The parameter is only effective if the acceleration model is supplied using external acceleration signals (p1400.2 = 1). For p1400.2 = 0, time constant p1442 (or p1452 for sensorless closed-loop VECTOR control) is used.

Refer to: p1428, p1511

p1430[0...n] CI: Speed pre-control / n_pre-control

SERVO

Can be changed: T		**Access level:** 3
Data type: Unsigned32	**Data set:** CDS	**Function diagram:** 1550, 1590, 5020
P-Group: Closed-loop control	**Units group:** -	**Unit selection:** -
Min	**Max**	**Factory setting**
-	-	0

Description: Sets the signal source for the speed/velocity pre-control channel (speed/velocity pre-control or torque/force pre-control).

p1430[0...n] CI: Velocity pre-control / n_pre-control

SERVO (Lin)

Can be changed: T		**Access level:** 3
Data type: Unsigned32	**Data set:** CDS	**Function diagram:** 1550, 1590, 5020
P-Group: Closed-loop control	**Units group:** -	**Unit selection:** -
Min	**Max**	**Factory setting**
-	-	0

Description: Sets the signal source for the speed/velocity pre-control channel (speed/velocity pre-control or torque/force pre-control).

© Siemens AG, 2005. All rights reserved

r1432 CO: Speed pre-control after balancing / n_prectr after sym

SERVO

Can be changed: -		**Access level:** 3
Data type: Floating Point	**Data set:** -	**Function diagram:** 5030
P-Group: Closed-loop control	**Units group:** SPEED_ROT	**Unit selection:** -
Min	**Max**	**Factory setting**
- [1/min]	- [1/min]	- [1/min]

Description: Displays the speed/velocity pre-control value after the balancing for the torque/force build-up (emulates the closed current control loop).

Dependency: Balancing can be parameterized with p1428 and/or p1429.

r1432 CO: Velocity pre-control after balancing / n_prectr after sym

SERVO (Lin)

Can be changed: -		**Access level:** 3
Data type: Floating Point	**Data set:** -	**Function diagram:** 5030
P-Group: Closed-loop control	**Units group:** SPEED_LIN_METRIC_P3	**Unit selection:** -
Min	**Max**	**Factory setting**
- [m/min]	- [m/min]	- [m/min]

Description: Displays the speed/velocity pre-control value after the balancing for the torque/force build-up (emulates the closed current control loop).

Dependency: Balancing can be parameterized with p1428 and/or p1429.

p1433[0...n] Speed controller reference model natural frequency / n_ctrl RefMod fn

SERVO, VECTOR (n/M)

Can be changed: U, T		**Access level:** 3
Data type: Floating Point	**Data set:** DDS	**Function diagram:** 5030, 6031
P-Group: Closed-loop control	**Units group:** FREQUENCY	**Unit selection:** -
Min	**Max**	**Factory setting**
0.0 [Hz]	8000.0 [Hz]	0.0 [Hz]

Description: Sets the natural frequency of a PT2 element for the reference model of the speed/velocity controller.

Recommendation: The reference model is correctly set when the characteristics of p1439 (reference model output) and p1445 (actual speed value) are virtually identical when the I-component of the speed controller is disabled.

Dependency: Together with p1434 and p1435, the characteristics (in the time domain) of the closed-loop speed control (P) can be emulated.

For VECTOR (r0107) the following applies:

The reference model is activated with p1400.3 = 1.

Refer to: p1434, p1435

p1433[0...n] Velocity controller reference model natural frequency / n_ctrl RefMod fn

SERVO (Lin)

Can be changed: U, T		**Access level:** 3
Data type: Floating Point	**Data set:** DDS	**Function diagram:** 5030, 6031
P-Group: Closed-loop control	**Units group:** FREQUENCY	**Unit selection:** -
Min	**Max**	**Factory setting**
0.0 [Hz]	8000.0 [Hz]	0.0 [Hz]

Description: Sets the natural frequency of a PT2 element for the reference model of the speed/velocity controller.

Recommendation: The reference model is correctly set when the characteristics of p1439 (reference model output) and p1445 (actual speed value) are virtually identical when the I-component of the speed controller is disabled.

© Siemens AG, 2005. All rights reserved

Dependency: Together with p1434 and p1435, the characteristics (in the time domain) of the closed-loop speed control (P) can be emulated.
For VECTOR (r0107) the following applies:
The reference model is activated with p1400.3 = 1.
Refer to: p1434, p1435

p1434[0...n] Speed controller reference model damping / n_ctrl RefMod D

SERVO, VECTOR (n/M)

Can be changed: U, T		**Access level:** 3
Data type: Floating Point	**Data set:** DDS	**Function diagram:** 5030, 6031
P-Group: Closed-loop control	**Units group:** -	**Unit selection:** -
Min	**Max**	**Factory setting**
0.000	5.000	1.000

Description: Sets the damping of a PT2 element for the reference model of the speed/velocity controller.
Recommendation: The reference model is correctly set when the characteristics of p1439 (reference model output) and p1445 (actual speed value) are virtually identical when the I-component of the speed controller is disabled.
Dependency: In conjunction with p1433 and p1435, the characteristics (in time) of the P-controlled speed control loop can be simulated.
For VECTOR (r0107) the following applies:
The reference model is activated with p1400.3 = 1.
Refer to: p1433, p1435

p1434[0...n] Velocity controller reference model damping / n_ctrl RefMod D

SERVO (Lin)

Can be changed: U, T		**Access level:** 3
Data type: Floating Point	**Data set:** DDS	**Function diagram:** 5030, 6031
P-Group: Closed-loop control	**Units group:** -	**Unit selection:** -
Min	**Max**	**Factory setting**
0.000	5.000	1.000

Description: Sets the damping of a PT2 element for the reference model of the speed/velocity controller.
Recommendation: The reference model is correctly set when the characteristics of p1439 (reference model output) and p1445 (actual speed value) are virtually identical when the I-component of the speed controller is disabled.
Dependency: In conjunction with p1433 and p1435, the characteristics (in time) of the P-controlled speed control loop can be simulated.
For VECTOR (r0107) the following applies:
The reference model is activated with p1400.3 = 1.
Refer to: p1433, p1435

p1435[0...n] Speed controller reference model deadtime / n_ctrRefMod t_dead

SERVO, VECTOR (n/M)

Can be changed: U, T		**Access level:** 2
Data type: Floating Point	**Data set:** DDS	**Function diagram:** 5030, 6031
P-Group: Closed-loop control	**Units group:** -	**Unit selection:** -
Min	**Max**	**Factory setting**
0.00	2.00	0.00

Description: Sets the "fractional" deadtime for the reference model of the speed/velocity controller.
This parameter emulates the computation deadtime of the proportionally controlled speed/velocity control loop.
The selected multiplier refers to the speed/velocity controller clock cycle (deadtime= p1435 * p0115[1]).
Recommendation: The reference model is correctly set when the characteristics of p1439 (reference model output) and p1445 (actual speed value) are virtually identical when the I-component of the speed controller is disabled.

© Siemens AG, 2005. All rights reserved

Dependency: In conjunction with p1433 and p1434, the characteristics (in time) of the P-controlled speed control loop can be simulated.
For VECTOR (r0107) the following applies:
The reference model is activated with p1400.3 = 1.
Refer to: p0115, p1433, p1434

p1435[0...n] Velocity controller reference model deadtime / n_ctrRefMod t_dead

SERVO (Lin)

Can be changed: U, T		**Access level:** 2
Data type: Floating Point	**Data set:** DDS	**Function diagram:** 5030, 6031
P-Group: Closed-loop control	**Units group:** -	**Unit selection:** -
Min	**Max**	**Factory setting**
0.00	2.00	0.00

Description: Sets the "fractional" deadtime for the reference model of the speed/velocity controller.
This parameter emulates the computation deadtime of the proportionally controlled speed/velocity control loop.
The selected multiplier refers to the speed/velocity controller clock cycle (deadtime= p1435 * p0115[1]).

Recommendation: The reference model is correctly set when the characteristics of p1439 (reference model output) and p1445 (actual speed value) are virtually identical when the I-component of the speed controller is disabled.

Dependency: In conjunction with p1433 and p1434, the characteristics (in time) of the P-controlled speed control loop can be simulated.
For VECTOR (r0107) the following applies:
The reference model is activated with p1400.3 = 1.
Refer to: p0115, p1433, p1434

r1436 CO: Speed controller reference model speed setpoint output / RefMod n_set outpt

SERVO, VECTOR (n/M)

Can be changed: -		**Access level:** 3
Data type: Floating Point	**Data set:** -	**Function diagram:** 5030, 6031
P-Group: Closed-loop control	**Units group:** SPEED_ROT	**Unit selection:** -
Min	**Max**	**Factory setting**
- [1/min]	- [1/min]	- [1/min]

Description: Displays the speed/velocity setpoint at the output of the reference model.

Dependency: For VECTOR (r0107) the following applies:
The reference model is activated with p1400.3 = 1.

r1436 CO: Velocity controller, reference model velocity_setpoint output / RefMod n_set outpt

SERVO (Lin)

Can be changed: -		**Access level:** 3
Data type: Floating Point	**Data set:** -	**Function diagram:** 5030, 6031
P-Group: Closed-loop control	**Units group:** SPEED_LIN_METRIC_P3	**Unit selection:** -
Min	**Max**	**Factory setting**
- [m/min]	- [m/min]	- [m/min]

Description: Displays the speed/velocity setpoint at the output of the reference model.

Dependency: For VECTOR (r0107) the following applies:
The reference model is activated with p1400.3 = 1.

© Siemens AG, 2005. All rights reserved

p1437[0...n] CI: Speed controller, reference model I component input / n_ctrRefMod I_comp

VECTOR (n/M)	**Can be changed:** T		**Access level:** 3
	Data type: Unsigned32	**Data set:** CDS	**Function diagram:** 6031
	P-Group: Closed-loop control	**Units group:** -	**Unit selection:** -
	Min	**Max**	**Factory setting**
	-	-	1436[0]

Description: Sets the signal source for speed setpoint for the integral component of the speed controller.

Dependency: The reference model is activated with p1400.3 = 1.
Refer to: p1400

Cautiont: In should be ensured that a speed setpoint is selected as signal source that corresponds to the setpoint for the P component of the speed controller.

r1438 CO: Speed controller, speed setpoint / n_ctrl n_set

SERVO, VECTOR (n/M)	**Can be changed:** -		**Access level:** 3
	Data type: Floating Point	**Data set:** -	**Function diagram:** 1550, 1590, 3080, 5030, 5040, 5060, 5210, 5300, 6040
	P-Group: Closed-loop control	**Units group:** SPEED_ROT	**Unit selection:** -
	Min	**Max**	**Factory setting**
	- [1/min]	- [1/min]	- [1/min]

Description: Displays the speed/velocity setpoint after setpoint limiting for the P component of the speed/velocity controller.
For V/f operation, the value that is displayed is of no relevance.

Dependency: Refer to: r1439

Note: In the standard state (the reference model is de-activated), r1438 = r1439.

r1438 CO: Velocity controller, velocity setpoint / n_ctrl n_set

SERVO (Lin)	**Can be changed:** -		**Access level:** 3
	Data type: Floating Point	**Data set:** -	**Function diagram:** 1550, 1590, 3080, 5030, 5040, 5060, 5210, 5300, 6040
	P-Group: Closed-loop control	**Units group:** SPEED_LIN_METRIC_P3	**Unit selection:** -
	Min	**Max**	**Factory setting**
	- [m/min]	- [m/min]	- [m/min]

Description: Displays the speed/velocity setpoint after setpoint limiting for the P component of the speed/velocity controller.
For V/f operation, the value that is displayed is of no relevance.

Dependency: Refer to: r1439

Note: In the standard state (the reference model is de-activated), r1438 = r1439.

r1439 Speed setpoint, I component / n_set I_comp

SERVO, VECTOR (n/M)	**Can be changed:** -		**Access level:** 3
	Data type: Floating Point	**Data set:** -	**Function diagram:** 5030, 5040, 6031
	P-Group: Closed-loop control	**Units group:** SPEED_ROT	**Unit selection:** -
	Min	**Max**	**Factory setting**
	- [1/min]	- [1/min]	- [1/min]

Description: Displays the speed/velocity setpoint for the I component of the speed/velocity controller (output of the reference model after the setpoint limiting).

Dependency: Refer to: r1438

Note: In the standard state (the reference model is de-activated), r1438 = r1439.

© Siemens AG, 2005. All rights reserved

r1439 Velocity setpoint, I component / n_set I_comp

SERVO (Lin)

Can be changed: -		**Access level:** 3
Data type: Floating Point	**Data set:** -	**Function diagram:** 5030, 5040, 6031
P-Group: Closed-loop control	**Units group:** SPEED_LIN_METRIC_P3	**Unit selection:** -
Min	**Max**	**Factory setting**
- [m/min]	- [m/min]	- [m/min]

Description: Displays the speed/velocity setpoint for the I component of the speed/velocity controller (output of the reference model after the setpoint limiting).

Dependency: Refer to: r1438

Note: In the standard state (the reference model is de-activated), r1438 = r1439.

p1441[0...n] Actual speed smoothing time / n_act T_smooth

SERVO, VECTOR (n/M)

Can be changed: U, T		**Access level:** 3
Data type: Floating Point	**Data set:** DDS	**Function diagram:** 4710, 6010
P-Group: Closed-loop control	**Units group:** TIME_M3	**Unit selection:** -
Min	**Max**	**Factory setting**
0.00 [ms]	50.00 [ms]	0.00 [ms]

Description: Sets the smoothing time constant (PT1) for the speed/velocity actual value.

Dependency: Refer to: r0063

Note: The speed actual value should be smoothed for encoders with a low pulse number or for resolvers.

After this parameter has been changed, we recommend that the speed controller is adapted and/or the speed controller settings checked Kp (p1460) and Tn (p1462).

p1441[0...n] Actual velocity, smoothing time / n_act T_smooth

SERVO (Lin)

Can be changed: U, T		**Access level:** 3
Data type: Floating Point	**Data set:** DDS	**Function diagram:** 4710, 6010
P-Group: Closed-loop control	**Units group:** TIME_M3	**Unit selection:** -
Min	**Max**	**Factory setting**
0.00 [ms]	50.00 [ms]	0.00 [ms]

Description: Sets the smoothing time constant (PT1) for the speed/velocity actual value.

Dependency: Refer to: r0063

Note: The speed actual value should be smoothed for encoders with a low pulse number or for resolvers.

After this parameter has been changed, we recommend that the speed controller is adapted and/or the speed controller settings checked Kp (p1460) and Tn (p1462).

p1442[0...n] Actual speed smoothing time / n_act T_smooth

VECTOR (n/M)

Can be changed: U, T		**Access level:** 2
Data type: Floating Point	**Data set:** DDS	**Function diagram:** 6040
P-Group: Closed-loop control	**Units group:** TIME_M3	**Unit selection:** -
Min	**Max**	**Factory setting**
0.00 [ms]	32000.00 [ms]	4.00 [ms]

Description: Sets the smoothing time for the actual speed value for closed-loop control with encoder.

Note: The smoothing must be increased if there is gear backlash. For longer smoothing times, the integral action time of the speed controller must also be increased (e.g. using p0340 = 4).

© Siemens AG, 2005. All rights reserved

r1444 Speed controller, speed setpoint steady-state (static) / n_ctrl n_set stat

SERVO, VECTOR (n/M)

Can be changed: -		**Access level:** 3
Data type: Floating Point	**Data set:** -	**Function diagram:** 5030
P-Group: Closed-loop control	**Units group:** SPEED_ROT	**Unit selection:** -
Min	**Max**	**Factory setting**
- [1/min]	- [1/min]	- [1/min]

Description: Displays the sum of all speed/velocity setpoints that are present.
The following sources are available for the displayed setpoint:
- setpoint at the ramp-function generator input (r1119).
- speed/velocity setpoint 1 (p1155).
- speed/velocity setpoint 2 (p1160).
- speed/velocity setpoint for speed/velocity pre-control /(p1430).
- setpoint from DSC (for DSC active).
- setpoint via PC (for master control active, p3983).

Dependency: Refer to: r1119, p1155, p1160, p1430

r1444 Velocity controller, velocity setpoint, total / n_ctrl n_set stat

SERVO (Lin)

Can be changed: -		**Access level:** 3
Data type: Floating Point	**Data set:** -	**Function diagram:** 5030
P-Group: Closed-loop control	**Units group:** SPEED_LIN_METRIC_P3	**Unit selection:** -
Min	**Max**	**Factory setting**
- [m/min]	- [m/min]	- [m/min]

Description: Displays the sum of all speed/velocity setpoints that are present.
The following sources are available for the displayed setpoint:
- setpoint at the ramp-function generator input (r1119).
- speed/velocity setpoint 1 (p1155).
- speed/velocity setpoint 2 (p1160).
- speed/velocity setpoint for speed/velocity pre-control /(p1430).
- setpoint from DSC (for DSC active).
- setpoint via PC (for master control active, p3983).

Dependency: Refer to: r1119, p1155, p1160, p1430

r1445 CO: Actual speed, smoothed / n_act smooth

VECTOR (n/M)

Can be changed: -		**Access level:** 4
Data type: Floating Point	**Data set:** -	**Function diagram:** 6040
P-Group: Closed-loop control	**Units group:** SPEED_ROT	**Unit selection:** -
Min	**Max**	**Factory setting**
- [1/min]	- [1/min]	- [1/min]

Description: Displays the smoothed actual speed for speed control.

p1452[0...n] Speed actual value smoothing time (SLVC) / n_act T_smoothSLVC

VECTOR (n/M)

Can be changed: U, T		**Access level:** 2
Data type: Floating Point	**Data set:** DDS	**Function diagram:** 6040
P-Group: Closed-loop control	**Units group:** TIME_M3	**Unit selection:** -
Min	**Max**	**Factory setting**
0.00 [ms]	32000.00 [ms]	10.00 [ms]

Description: Sets the smoothing time for the actual speed for sensorless closed-loop speed control.

Note: The smoothing must be increased if there is gear backlash. For longer smoothing times, the integral action time of the speed controller must also be increased (e.g. using p0340 = 4).

© Siemens AG, 2005. All rights reserved

r1454 CO: Speed controller system deviation I component / n_ctrl sys_dev Tn

SERVO, VECTOR (n/M)

Can be changed: -		**Access level:** 3
Data type: Floating Point	**Data set:** -	**Function diagram:** 5040
P-Group: Closed-loop control	**Units group:** SPEED_ROT	**Unit selection:** -
Min	**Max**	**Factory setting**
- [1/min]	- [1/min]	- [1/min]

Description: Displays the system deviation of the I component of the speed/velocity controller.
When the reference model is inactive (p1433 = 0 Hz), this parameter corresponds to the system deviation of the complete PI controller (r1454 = r0064).

r1454 CO: Velocity controller system deviation I component / n_ctrl sys_dev Tn

SERVO (Lin)

Can be changed: -		**Access level:** 3
Data type: Floating Point	**Data set:** -	**Function diagram:** 5040
P-Group: Closed-loop control	**Units group:** SPEED_LIN_METRIC_P3	**Unit selection:** -
Min	**Max**	**Factory setting**
- [m/min]	- [m/min]	- [m/min]

Description: Displays the system deviation of the I component of the speed/velocity controller.
When the reference model is inactive (p1433 = 0 Hz), this parameter corresponds to the system deviation of the complete PI controller (r1454 = r0064).

p1455[0...n] CI: Speed controller P gain adaptation signal / n_ctrl Adpt_sig Kp

SERVO, VECTOR (n/M)

Can be changed: T		**Access level:** 3
Data type: Unsigned32	**Data set:** CDS	**Function diagram:** 5050, 6050
P-Group: Closed-loop control	**Units group:** -	**Unit selection:** -
Min	**Max**	**Factory setting**
-	-	0

Description: Sets the source for the adaptation signal to additionally adapt the P gain of the speed/velocity controller.
Dependency: Refer to: p1456, p1457, p1458, p1459

p1455[0...n] CI: Velocity controller, P gain adaptation signal / n_ctrl Adpt_sig Kp

SERVO (Lin)

Can be changed: T		**Access level:** 3
Data type: Unsigned32	**Data set:** CDS	**Function diagram:** 5050, 6050
P-Group: Closed-loop control	**Units group:** -	**Unit selection:** -
Min	**Max**	**Factory setting**
-	-	0

Description: Sets the source for the adaptation signal to additionally adapt the P gain of the speed/velocity controller.
Dependency: Refer to: p1456, p1457, p1458, p1459

© Siemens AG, 2005. All rights reserved

p1456[0...n] Speed controller P gain adaptation lower starting point / n_ctrl AdaptKpLow.

SERVO, VECTOR (n/M)

Can be changed: U, T		**Access level:** 3
Data type: Floating Point	**Data set:** DDS	**Function diagram:** 5050, 6050
P-Group: Closed-loop control	**Units group:** PERCENT	**Unit selection:** -
Min	**Max**	**Factory setting**
0.00 [%]	400.00 [%]	0.00 [%]

Description: Sets the lower starting point of the adaptation range for the additional adaptation of the P gain of the speed/velocity controller. The values are in % and refer to the set source of the adaptation signal.

Dependency: Refer to: p1455, p1457, p1458, p1459

p1456[0...n] Velocity controller P gain adaptation, lower starting point / n_ctrl AdaptKpLow.

SERVO (Lin)

Can be changed: U, T		**Access level:** 3
Data type: Floating Point	**Data set:** DDS	**Function diagram:** 5050, 6050
P-Group: Closed-loop control	**Units group:** PERCENT	**Unit selection:** -
Min	**Max**	**Factory setting**
0.00 [%]	400.00 [%]	0.00 [%]

Description: Sets the lower starting point of the adaptation range for the additional adaptation of the P gain of the speed/velocity controller. The values are in % and refer to the set source of the adaptation signal.

Dependency: Refer to: p1455, p1457, p1458, p1459

p1457[0...n] Speed controller P gain adaptation upper starting point / n_ctrl AdaptKp up.

SERVO, VECTOR (n/M)

Can be changed: U, T		**Access level:** 3
Data type: Floating Point	**Data set:** DDS	**Function diagram:** 5050, 6050
P-Group: Closed-loop control	**Units group:** PERCENT	**Unit selection:** -
Min	**Max**	**Factory setting**
0.00 [%]	400.00 [%]	0.00 [%]

Description: Sets the upper starting point of the adaptation range for the additional adaptation of the P gain of the speed/velocity controller. The values are in % and refer to the set source of the adaptation signal.

Dependency: Refer to: p1455, p1456, p1458, p1459

p1457[0...n] Velocity controller P gain adaptation upper starting point / n_ctrl AdaptKp up.

SERVO (Lin)

Can be changed: U, T		**Access level:** 3
Data type: Floating Point	**Data set:** DDS	**Function diagram:** 5050, 6050
P-Group: Closed-loop control	**Units group:** PERCENT	**Unit selection:** -
Min	**Max**	**Factory setting**
0.00 [%]	400.00 [%]	0.00 [%]

Description: Sets the upper starting point of the adaptation range for the additional adaptation of the P gain of the speed/velocity controller. The values are in % and refer to the set source of the adaptation signal.

Dependency: Refer to: p1455, p1456, p1458, p1459

© Siemens AG, 2005. All rights reserved

p1458[0...n] Adaptation factor, lower / Adapt_factor lower

SERVO, VECTOR (n/M)	**Can be changed:** U, T		**Access level:** 3
	Data type: Floating Point	**Data set:** DDS	**Function diagram:** 5050, 6050
	P-Group: Closed-loop control	**Units group:** PERCENT	**Unit selection:** -
	Min	**Max**	**Factory setting**
	0.0 [%]	200000.0 [%]	100.0 [%]

Description: Sets the adaptation factor before the adaptation range (0 % ... p1456) to additionally adapt the P gain of the speed/velocity controller.

Dependency: Refer to: p1455, p1456, p1457, p1459

p1459[0...n] Adaptation factor, upper / Adapt_factor upper

SERVO, VECTOR (n/M)	**Can be changed:** U, T		**Access level:** 3
	Data type: Floating Point	**Data set:** DDS	**Function diagram:** 5050, 6050
	P-Group: Closed-loop control	**Units group:** PERCENT	**Unit selection:** -
	Min	**Max**	**Factory setting**
	0.0 [%]	200000.0 [%]	100.0 [%]

Description: Sets the adaptation factor after the adaptation range (> p1457) to additionally adapt the P gain of the speed/velocity controller.

Dependency: Refer to: p1455, p1456, p1457, p1458

p1460[0...n] Speed controller P gain adaptation speed, lower / n_ctrl Kp n lower

SERVO	**Can be changed:** U, T		**Access level:** 2
	Data type: Floating Point	**Data set:** DDS	**Function diagram:** 5040, 6040
	P-Group: Closed-loop control	**Units group:** GAIN_SPEED_CTRL	**Unit selection:** p0528
	Min	**Max**	**Factory setting**
	0.000 [Nms/rad]	999999.000 [Nms/rad]	0.300 [Nms/rad]

Description: Sets the P gain of the speed/velocity controller before the adaptation speed range/velocity range (0 ... p1464). This value corresponds to the basic setting of the P gain of the speed/velocity controller without adaptation (p1461 = 100 %).

Dependency: For VECTOR (r0107) the following applies:
For p0528 = 1, the speed controller gain is represented without any dimensions.
Refer to: p1461, p1464, p1465

Note: SERVO:
When automatically calculating the speed controller, only the motor moment of inertia is taken into account (p0341). For higher load moments of inertia (p0342 > 1 or p1498 > 0) we recommend that the speed controller gain is checked.

p1460[0...n] Velocity controller, P gain adaptation velocity, lower / n_ctrl Kp n lower

SERVO (Lin)	**Can be changed:** U, T		**Access level:** 2
	Data type: Floating Point	**Data set:** DDS	**Function diagram:** 5040, 6040
	P-Group: Closed-loop control	**Units group:** GAIN_SPEED_CTRL_LIN	**Unit selection:** p0528
	Min	**Max**	**Factory setting**
	0.000 [Ns/m]	999999.000 [Ns/m]	10.000 [Ns/m]

Description: Sets the P gain of the speed/velocity controller before the adaptation speed range/velocity range (0 ... p1464). This value corresponds to the basic setting of the P gain of the speed/velocity controller without adaptation (p1461 = 100 %).

© Siemens AG, 2005. All rights reserved

Dependency: For VECTOR (r0107) the following applies:
For p0528 = 1, the speed controller gain is represented without any dimensions.
Refer to: p1461, p1464, p1465

Note: SERVO:
When automatically calculating the speed controller, only the motor moment of inertia is taken into account (p0341). For higher load moments of inertia (p0342 > 1 or p1498 > 0) we recommend that the speed controller gain is checked.

p1460[0...n] Speed controller P gain adaptation speed, lower / n_ctrl Kp n lower

VECTOR (n/M)

Can be changed: U, T		**Access level:** 2
Data type: Floating Point	**Data set:** DDS	**Function diagram:** 5040, 6040
P-Group: Closed-loop control	**Units group:** -	**Unit selection:** p0528
Min	**Max**	**Factory setting**
0.000	999999.000	0.300

Description: Sets the P gain of the speed/velocity controller before the adaptation speed range/velocity range (0 ... p1464). This value corresponds to the basic setting of the P gain of the speed/velocity controller without adaptation (p1461 = 100 %).

Dependency: For VECTOR (r0107) the following applies:
For p0528 = 1, the speed controller gain is represented without any dimensions.
Refer to: p1461, p1464, p1465

Note: SERVO:
When automatically calculating the speed controller, only the motor moment of inertia is taken into account (p0341). For higher load moments of inertia (p0342 > 1 or p1498 > 0) we recommend that the speed controller gain is checked.

p1461[0...n] Speed controller P gain adaptation speed, upper / n_ctrl Kp n upper

SERVO, VECTOR (n/M)

Can be changed: U, T		**Access level:** 3
Data type: Floating Point	**Data set:** DDS	**Function diagram:** 5050, 6050
P-Group: Closed-loop control	**Units group:** PERCENT	**Unit selection:** -
Min	**Max**	**Factory setting**
0.000 [%]	200000.000 [%]	100.000 [%]

Description: Sets the P gain of the speed/velocity controller for the upper adaptation speed range/velocity range (> p1465). The entry is made referred to the P gain for the lower adaptation speed range/velocity range of the speed/velocity controller (% referred to p1460).

Dependency: Refer to: p1460, p1464, p1465

Note: SERVO:
When automatically calculating the speed controller, only the motor moment of inertia is taken into account (p0341). For higher load moments of inertia (p0342 > 1 or p1498 > 0) we recommend that the speed controller gain is checked.

p1461[0...n] Velocity controller, P gain adaptation velocity, upper / n_ctrl Kp n upper

SERVO (Lin)

Can be changed: U, T		**Access level:** 3
Data type: Floating Point	**Data set:** DDS	**Function diagram:** 5050, 6050
P-Group: Closed-loop control	**Units group:** PERCENT	**Unit selection:** -
Min	**Max**	**Factory setting**
0.000 [%]	200000.000 [%]	100.000 [%]

Description: Sets the P gain of the speed/velocity controller for the upper adaptation speed range/velocity range (> p1465). The entry is made referred to the P gain for the lower adaptation speed range/velocity range of the speed/velocity controller (% referred to p1460).

Dependency: Refer to: p1460, p1464, p1465

© Siemens AG, 2005. All rights reserved

Note: SERVO:
When automatically calculating the speed controller, only the motor moment of inertia is taken into account (p0341). For higher load moments of inertia (p0342 > 1 or p1498 > 0) we recommend that the speed controller gain is checked.

p1462[0...n] Speed controller integral action time adaptation speed, lower / n_ctrl Tn n lower

SERVO, VECTOR (n/M)

Can be changed: U, T		**Access level:** 2
Data type: Floating Point	**Data set:** DDS	**Function diagram:** 5040, 5050, 6040, 6050
P-Group: Closed-loop control	**Units group:** TIME_M3	**Unit selection:** -
Min	**Max**	**Factory setting**
0.00 [ms]	100000.00 [ms]	20.00 [ms]

Description: Sets the integration action time of the speed/velocity controller before the adaptation speed range/velocity range (0 ... p1464). This value corresponds to the basic setting of the integral action time of the speed/velocity controller without adaptation (p1461 = 100 %).

Dependency: Refer to: p1463, p1464, p1465

p1462[0...n] Velocity contr., integral act. time adaptation velocity, lower / n_ctrl Tn n lower

SERVO (Lin)

Can be changed: U, T		**Access level:** 2
Data type: Floating Point	**Data set:** DDS	**Function diagram:** 5040, 5050, 6040, 6050
P-Group: Closed-loop control	**Units group:** TIME_M3	**Unit selection:** -
Min	**Max**	**Factory setting**
0.00 [ms]	100000.00 [ms]	20.00 [ms]

Description: Sets the integration action time of the speed/velocity controller before the adaptation speed range/velocity range (0 ... p1464). This value corresponds to the basic setting of the integral action time of the speed/velocity controller without adaptation (p1461 = 100 %).

Dependency: Refer to: p1463, p1464, p1465

p1463[0...n] Speed controller integral action time adaptation speed, upper / n_ctrl Tn n upper

SERVO, VECTOR (n/M)

Can be changed: U, T		**Access level:** 3
Data type: Floating Point	**Data set:** DDS	**Function diagram:** 5050, 6050
P-Group: Closed-loop control	**Units group:** PERCENT	**Unit selection:** -
Min	**Max**	**Factory setting**
0.0 [%]	200000.0 [%]	100.0 [%]

Description: Sets the integral action time of the speed/velocity controller after the adaptation speed range/velocity range (> p1465). The entry is made referred to the integral action time for the lower adaptation speed range/velocity range of the speed/velocity controller (% referred to p1462).

Dependency: Refer to: p1462, p1464, p1465

p1463[0...n] Velocity contr., integral act. time adaptation velocity, upper / n_ctrl Tn n upper

SERVO (Lin)

Can be changed: U, T		**Access level:** 3
Data type: Floating Point	**Data set:** DDS	**Function diagram:** 5050, 6050
P-Group: Closed-loop control	**Units group:** PERCENT	**Unit selection:** -
Min	**Max**	**Factory setting**
0.0 [%]	200000.0 [%]	100.0 [%]

Description: Sets the integral action time of the speed/velocity controller after the adaptation speed range/velocity range (> p1465). The entry is made referred to the integral action time for the lower adaptation speed range/velocity range of the speed/velocity controller (% referred to p1462).

Dependency: Refer to: p1462, p1464, p1465

© Siemens AG, 2005. All rights reserved

p1464[0...n] Speed controller adaptation speed, lower / n_ctrl n lower

SERVO, VECTOR (n/M)

Can be changed: U, T		**Access level:** 3
Data type: Floating Point	**Data set:** DDS	**Function diagram:** 5050, 6050
P-Group: Closed-loop control	**Units group:** SPEED_ROT	**Unit selection:** -
Min	**Max**	**Factory setting**
0.00 [1/min]	210000.00 [1/min]	0.00 [1/min]

Description: Sets the lower adaptation speed/velocity of the speed/velocity controller. No adaptation is effective below this speed/velocity.

Dependency: Refer to: p1460, p1461, p1462, p1463, p1465

p1464[0...n] Velocity controller adaptation velocity, lower / n_ctrl n lower

SERVO (Lin)

Can be changed: U, T		**Access level:** 3
Data type: Floating Point	**Data set:** DDS	**Function diagram:** 5050, 6050
P-Group: Closed-loop control	**Units group:** SPEED_LIN_METRIC_P3	**Unit selection:** -
Min	**Max**	**Factory setting**
0.00 [m/min]	1000.00 [m/min]	0.00 [m/min]

Description: Sets the lower adaptation speed/velocity of the speed/velocity controller. No adaptation is effective below this speed/velocity.

Dependency: Refer to: p1460, p1461, p1462, p1463, p1465

p1465[0...n] Speed controller adaptation speed, upper / n_ctrl n upper

SERVO, VECTOR (n/M)

Can be changed: U, T		**Access level:** 3
Data type: Floating Point	**Data set:** DDS	**Function diagram:** 5050, 6050
P-Group: Closed-loop control	**Units group:** SPEED_ROT	**Unit selection:** -
Min	**Max**	**Factory setting**
0.00 [1/min]	210000.00 [1/min]	210000.00 [1/min]

Description: Sets the upper adaptation speed/velocity of the speed/velocity controller. No adaptation is effective above this speed/velocity. For P gain, p1460 * p1461 is effective. For the integral action time, p1462 * p1463 is effective.

Dependency: Refer to: p1460, p1461, p1462, p1463, p1464

p1465[0...n] Velocity controller adaptation velocity, upper / n_ctrl n upper

SERVO (Lin)

Can be changed: U, T		**Access level:** 3
Data type: Floating Point	**Data set:** DDS	**Function diagram:** 5050, 6050
P-Group: Closed-loop control	**Units group:** SPEED_LIN_METRIC_P3	**Unit selection:** -
Min	**Max**	**Factory setting**
0.00 [m/min]	1000.00 [m/min]	1000.00 [m/min]

Description: Sets the upper adaptation speed/velocity of the speed/velocity controller. No adaptation is effective above this speed/velocity. For P gain, p1460 * p1461 is effective. For the integral action time, p1462 * p1463 is effective.

Dependency: Refer to: p1460, p1461, p1462, p1463, p1464

© Siemens AG, 2005. All rights reserved

p1466[0...n] CI: Speed controller P-gain scaling / n_ctrl Kp Scal

SERVO, VECTOR (n/M)

Can be changed: T		**Access level:** 3
Data type: Unsigned32	**Data set:** CDS	**Function diagram:** 5050, 6050
P-Group: Closed-loop control	**Units group:** -	**Unit selection:** -
Min	**Max**	**Factory setting**
-	-	1

Description: Sets the signal source for the scaling of the P gain of the speed/velocity controller. This also makes the effective P gain (including adaptations) scalable.

p1466[0...n] CI: Velocity controller P gain scaling / n_ctrl Kp Scal

SERVO (Lin)

Can be changed: T		**Access level:** 3
Data type: Unsigned32	**Data set:** CDS	**Function diagram:** 5050, 6050
P-Group: Closed-loop control	**Units group:** -	**Unit selection:** -
Min	**Max**	**Factory setting**
-	-	1

Description: Sets the signal source for the scaling of the P gain of the speed/velocity controller. This also makes the effective P gain (including adaptations) scalable.

r1468 Speed controller P-gain effective / n_ctrl Kp eff

SERVO

Can be changed: -		**Access level:** 3
Data type: Floating Point	**Data set:** -	**Function diagram:** 3080, 5040, 5210
P-Group: Closed-loop control	**Units group:** GAIN_SPEED_CTRL	**Unit selection:** p0528
Min	**Max**	**Factory setting**
- [Nms/rad]	- [Nms/rad]	- [Nms/rad]

Description: Displays the effective P gain of the speed/velocity controller.

r1468 Velocity controller, P gain effective / n_ctrl Kp eff

SERVO (Lin)

Can be changed: -		**Access level:** 3
Data type: Floating Point	**Data set:** -	**Function diagram:** 3080, 5040, 5210
P-Group: Closed-loop control	**Units group:** GAIN_SPEED_CTRL_LIN	**Unit selection:** p0528
Min	**Max**	**Factory setting**
- [Ns/m]	- [Ns/m]	- [Ns/m]

Description: Displays the effective P gain of the speed/velocity controller.

r1468 CO: Speed controller P-gain effective / n_ctrl Kp eff

VECTOR (n/M)

Can be changed: -		**Access level:** 3
Data type: Floating Point	**Data set:** -	**Function diagram:** 6040
P-Group: Closed-loop control	**Units group:** -	**Unit selection:** p0528
Min	**Max**	**Factory setting**
-	-	-

Description: Displays the effective P gain of the speed controller.

Dependency: For p0528 = 1, the speed controller gain is represented without any dimensions. In this case, connector output signal r1468 is increased by a factor of 100 in order to improve the resolution.

© Siemens AG, 2005. All rights reserved

r1469 Speed controller integral action time effective / n_ctrl Tn eff

SERVO, VECTOR (n/M)

Can be changed: -		**Access level:** 3
Data type: Floating Point	**Data set:** -	**Function diagram:** 5040, 6040
P-Group: Closed-loop control	**Units group:** TIME_M3	**Unit selection:** -
Min	**Max**	**Factory setting**
- [ms]	- [ms]	- [ms]

Description: Displays the effective integral action time of the speed/velocity controller.

r1469 Velocity controller integral action time effective / n_ctrl Tn eff

SERVO (Lin)

Can be changed: -		**Access level:** 3
Data type: Floating Point	**Data set:** -	**Function diagram:** 5040, 6040
P-Group: Closed-loop control	**Units group:** TIME_M3	**Unit selection:** -
Min	**Max**	**Factory setting**
- [ms]	- [ms]	- [ms]

Description: Displays the effective integral action time of the speed/velocity controller.

p1470[0...n] Speed controller sensorless operation P-gain / n_ctrl SLVC Kp

SERVO

Can be changed: U, T		**Access level:** 2
Data type: Floating Point	**Data set:** DDS	**Function diagram:** 5210, 6040,, 6050
P-Group: Closed-loop control	**Units group:** GAIN_SPEED_CTRL	**Unit selection:** p0528
Min	**Max**	**Factory setting**
0.000 [Nms/rad]	999999.000 [Nms/rad]	0.300 [Nms/rad]

Description: Sets the P gain for sensorless operation for the speed/velocity controller.

Dependency: For VECTOR (r0107) the following applies:
For p0528 = 1, the speed controller gain is represented without any dimensions.

Note: SERVO:
When automatically calculating the speed controller, only the motor moment of inertia is taken into account (p0341). For higher load moments of inertia (p0342 > 1 or p1498 > 0) we recommend that the speed controller gain is checked.
VECTOR:
The product p0341 * p0342 is taken into account when automatically calculating the speed controller (p0340 = 4).

p1470[0...n] Velocity controller sensorless operation P-gain / n_ctrl SLVC Kp

SERVO (Lin)

Can be changed: U, T		**Access level:** 2
Data type: Floating Point	**Data set:** DDS	**Function diagram:** 5210, 6040,, 6050
P-Group: Closed-loop control	**Units group:** GAIN_SPEED_CTRL_LIN	**Unit selection:** p0528
Min	**Max**	**Factory setting**
0.000 [Ns/m]	999999.000 [Ns/m]	10.000 [Ns/m]

Description: Sets the P gain for sensorless operation for the speed/velocity controller.

Dependency: For VECTOR (r0107) the following applies:
For p0528 = 1, the speed controller gain is represented without any dimensions.

© Siemens AG, 2005. All rights reserved

Note: SERVO:
When automatically calculating the speed controller, only the motor moment of inertia is taken into account (p0341). For higher load moments of inertia (p0342 > 1 or p1498 > 0) we recommend that the speed controller gain is checked.
VECTOR:
The product p0341 * p0342 is taken into account when automatically calculating the speed controller (p0340 = 4).

p1470[0...n] Speed controller sensorless operation P-gain / n_ctrl SLVC Kp

VECTOR (n/M)

Can be changed: U, T		**Access level:** 2
Data type: Floating Point	**Data set:** DDS	**Function diagram:** 5210, 6040,, 6050
P-Group: Closed-loop control	**Units group:** -	**Unit selection:** p0528
Min	**Max**	**Factory setting**
0.000	999999.000	0.300

Description: Sets the P gain for sensorless operation for the speed/velocity controller.

Dependency: For VECTOR (r0107) the following applies:
For p0528 = 1, the speed controller gain is represented without any dimensions.

Note: SERVO:
When automatically calculating the speed controller, only the motor moment of inertia is taken into account (p0341). For higher load moments of inertia (p0342 > 1 or p1498 > 0) we recommend that the speed controller gain is checked.
VECTOR:
The product p0341 * p0342 is taken into account when automatically calculating the speed controller (p0340 = 4).

p1472[0...n] Speed controller sensorless operation integral action time / n_ctrl SLVC Tn

SERVO, VECTOR (n/M)

Can be changed: U, T		**Access level:** 2
Data type: Floating Point	**Data set:** DDS	**Function diagram:** 5210, 6040, 6050
P-Group: Closed-loop control	**Units group:** TIME_M3	**Unit selection:** -
Min	**Max**	**Factory setting**
0.0 [ms]	100000.0 [ms]	20.0 [ms]

Description: Set the integral action time for sensorless operation for the speed/velocity controller.

p1472[0...n] Velocity controller sensorless operation integral action time / n_ctrl SLVC Tn

SERVO (Lin)

Can be changed: U, T		**Access level:** 2
Data type: Floating Point	**Data set:** DDS	**Function diagram:** 5210, 6040, 6050
P-Group: Closed-loop control	**Units group:** TIME_M3	**Unit selection:** -
Min	**Max**	**Factory setting**
0.0 [ms]	100000.0 [ms]	20.0 [ms]

Description: Set the integral action time for sensorless operation for the speed/velocity controller.

p1476[0...n] BI: Speed controller hold integrator / n_ctrl integ stop

SERVO, VECTOR (n/M)

Can be changed: T		**Access level:** 3
Data type: Unsigned32	**Data set:** CDS	**Function diagram:** 5040
P-Group: Closed-loop control	**Units group:** -	**Unit selection:** -
Min	**Max**	**Factory setting**
-	-	0

Description: Sets the signal source to hold the integrator for the speed/velocity controller.

© Siemens AG, 2005. All rights reserved

p1476[0...n] BI: Velocity controller, hold integrator / n_ctrl integ stop

SERVO (Lin)	**Can be changed:** T		**Access level:** 3
	Data type: Unsigned32	**Data set:** CDS	**Function diagram:** 5040
	P-Group: Closed-loop control	**Units group:** -	**Unit selection:** -
	Min	**Max**	**Factory setting**
	-	-	0

Description: Sets the signal source to hold the integrator for the speed/velocity controller.

p1477[0...n] BI: Speed controller set integrator value / n_ctrl integ set

SERVO, VECTOR (n/M)	**Can be changed:** T		**Access level:** 3
	Data type: Unsigned32	**Data set:** CDS	**Function diagram:** 5040, 5210
	P-Group: Closed-loop control	**Units group:** -	**Unit selection:** -
	Min	**Max**	**Factory setting**
	-	-	0

Description: Sets the signal source to set the integrator setting value (p1478).

Note: For the interface mode "SIMODRIVE 611 universal" (p2038 = 1), p1477 and p1478 are used for the signal STW2.6 (integrator inhibit, speed controller).

p1477[0...n] BI: Set velocity controller integrator value / n_ctrl integ set

SERVO (Lin)	**Can be changed:** T		**Access level:** 3
	Data type: Unsigned32	**Data set:** CDS	**Function diagram:** 5040, 5210
	P-Group: Closed-loop control	**Units group:** -	**Unit selection:** -
	Min	**Max**	**Factory setting**
	-	-	0

Description: Sets the signal source to set the integrator setting value (p1478).

Note: For the interface mode "SIMODRIVE 611 universal" (p2038 = 1), p1477 and p1478 are used for the signal STW2.6 (integrator inhibit, speed controller).

p1478[0...n] CI: Speed controller integrator setting value / n_ctr integ_setVal

SERVO, VECTOR (n/M)	**Can be changed:** T		**Access level:** 3
	Data type: Unsigned32	**Data set:** CDS	**Function diagram:** 5040, 5210
	P-Group: Closed-loop control	**Units group:** -	**Unit selection:** -
	Min	**Max**	**Factory setting**
	-	-	0

Description: Sets the signal source for the integrator setting value for the speed/velocity controller.
The signal to set this integrator setting value is interconnected via p1477.

Dependency: For VECTOR (r0107) the following applies:
The setting value of the speed controller integrator is weighted with the scaling factor of the signal source in p1479.

Note: For the interface mode "SIMODRIVE 611 universal" (p2038 = 1), p1477 and p1478 are used for the signal STW2.6 (integrator inhibit, speed controller).

© Siemens AG, 2005. All rights reserved

p1478[0...n] CI: Velocity controller, integrator value / n_ctr integ_setVal

SERVO (Lin)	**Can be changed:** T		**Access level:** 3
	Data type: Unsigned32	**Data set:** CDS	**Function diagram:** 5040, 5210
	P-Group: Closed-loop control	**Units group:** -	**Unit selection:** -
	Min	**Max**	**Factory setting**
	-	-	0

Description: Sets the signal source for the integrator setting value for the speed/velocity controller.
The signal to set this integrator setting value is interconnected via p1477.

Dependency: For VECTOR (r0107) the following applies:
The setting value of the speed controller integrator is weighted with the scaling factor of the signal source in p1479.

Note: For the interface mode "SIMODRIVE 611 universal" (p2038 = 1), p1477 and p1478 are used for the signal STW2.6 (integrator inhibit, speed controller).

p1479[0...n] CI: Speed controller integrator setting value scaling / n_ctrl I_val scal

VECTOR (n/M)	**Can be changed:** T		**Access level:** 3
	Data type: Unsigned32	**Data set:** CDS	**Function diagram:** -
	P-Group: Closed-loop control	**Units group:** -	**Unit selection:** -
	Min	**Max**	**Factory setting**
	-	-	1

Description: Sets the signal source for scaling the integrator setting value (p1478) of the speed controller.

Dependency: Refer to: p1478

r1480 CO: Speed controller PI torque output / n_ctrl PI-M_output

SERVO	**Can be changed:** -		**Access level:** 3
	Data type: Floating Point	**Data set:** -	**Function diagram:** 1590, 5040, 5060, 5210
	P-Group: Closed-loop control	**Units group:** TORQUE	**Unit selection:** -
	Min	**Max**	**Factory setting**
	- [Nm]	- [Nm]	- [Nm]

Description: Displays the torque/force setpoint at the output of the PI speed/velocity controller.

r1480 CO: Velocity controller PI force output / n_ctrl PI-M_output

SERVO (Lin)	**Can be changed:** -		**Access level:** 3
	Data type: Floating Point	**Data set:** -	**Function diagram:** 1590, 5040, 5060, 5210
	P-Group: Closed-loop control	**Units group:** FORCE	**Unit selection:** -
	Min	**Max**	**Factory setting**
	- [N]	- [N]	- [N]

Description: Displays the torque/force setpoint at the output of the PI speed/velocity controller.

r1481 CO: Speed controller P torque output / n_ctrl P-M_output

SERVO	**Can be changed:** -		**Access level:** 3
	Data type: Floating Point	**Data set:** -	**Function diagram:** 5040, 5210
	P-Group: Closed-loop control	**Units group:** TORQUE	**Unit selection:** -
	Min	**Max**	**Factory setting**
	- [Nm]	- [Nm]	- [Nm]

Description: Displays the torque/force setpoint at the output of the P speed/velocity controller.

© Siemens AG, 2005. All rights reserved

r1481 CO: Velocity controller P force output / n_ctrl P-M_output

SERVO (Lin)

Can be changed: -		**Access level:** 3
Data type: Floating Point	**Data set:** -	**Function diagram:** 5040, 5210
P-Group: Closed-loop control	**Units group:** FORCE	**Unit selection:** -
Min	**Max**	**Factory setting**
- [N]	- [N]	- [N]

Description: Displays the torque/force setpoint at the output of the P speed/velocity controller.

r1482 CO: Speed controller I torque output / n_ctrl I-M_output

SERVO, VECTOR (n/M)

Can be changed: -		**Access level:** 3
Data type: Floating Point	**Data set:** -	**Function diagram:** 5040, 5210, 6040
P-Group: Closed-loop control	**Units group:** TORQUE	**Unit selection:** -
Min	**Max**	**Factory setting**
- [Nm]	- [Nm]	- [Nm]

Description: Displays the torque/force setpoint at the output of the I speed/velocity control.

r1482 CO: Velocity controller I force output / n_ctrl I-M_output

SERVO (Lin)

Can be changed: -		**Access level:** 3
Data type: Floating Point	**Data set:** -	**Function diagram:** 5040, 5210, 6040
P-Group: Closed-loop control	**Units group:** FORCE	**Unit selection:** -
Min	**Max**	**Factory setting**
- [N]	- [N]	- [N]

Description: Displays the torque/force setpoint at the output of the I speed/velocity control.

p1488[0...n] Droop input source / Droop input,source

VECTOR (n/M)

Can be changed: U, T		**Access level:** 3
Data type: Integer16	**Data set:** DDS	**Function diagram:** 6030
P-Group: Closed-loop control	**Units group:** -	**Unit selection:** -
Min	**Max**	**Factory setting**
0	3	0

Description: Sets the source for droop feedback.

Values:
0: Droop feedback not connected
1: Droop from torque setpoint
2: Droop from speed controller output
3: Droop from integral output, speed controller

Dependency: Refer to: p1489, r1490, p1492

p1489[0...n] Droop feedback scaling / Droop scaling

VECTOR (n/M)

Can be changed: U, T		**Access level:** 3
Data type: Floating Point	**Data set:** DDS	**Function diagram:** 6030
P-Group: Closed-loop control	**Units group:** -	**Unit selection:** -
Min	**Max**	**Factory setting**
0.000	0.500	0.050

Description: Sets the scaling for the droop feedback

Dependency: Refer to: p1488, r1490, p1492

Note: Example:
A value of 0.05 means that for a torque equal to the rated motor torque, the rated motor speed is reduced by 5 %.

© Siemens AG, 2005. All rights reserved

r1490 CO: Droop feedback speed reduction / Droop n_reduction

VECTOR (n/M)	**Can be changed:** -		**Access level:** 3
	Data type: Floating Point	**Data set:** -	**Function diagram:** 6030
	P-Group: Closed-loop control	**Units group:** SPEED_ROT	**Unit selection:** -
	Min	**Max**	**Factory setting**
	- [1/min]	- [1/min]	- [1/min]

Description: Displays the output signal of the droop calculation. The droop feedback result is subtracted from the speed setpoint when activated (p1492).

Dependency: Refer to: p1488, p1489, p1492

p1492[0...n] BI: Droop feedback enable / Enables droop

VECTOR (n/M)	**Can be changed:** U, T		**Access level:** 3
	Data type: Unsigned32	**Data set:** CDS	**Function diagram:** -
	P-Group: Closed-loop control	**Units group:** -	**Unit selection:** -
	Min	**Max**	**Factory setting**
	-	-	0

Description: Enables the droop to be applied to the speed/velocity setpoint.

Dependency: Refer to: p1488, p1489, r1490

Note: Even when not enabled, the droop speed is calculated but not subtracted from the setpoint speed. This makes it possible to subtract the result of this calculation from the speed of another drive.

p1494[0...n] Speed controller integrator feedback time constant / n_ctr integ_fdbk T

SERVO	**Can be changed:** U, T		**Access level:** 2
	Data type: Floating Point	**Data set:** DDS	**Function diagram:** 5040, 5210
	P-Group: Closed-loop control	**Units group:** TIME_M3	**Unit selection:** -
	Min	**Max**	**Factory setting**
	0.00 [ms]	1000.00 [ms]	0.00 [ms]

Description: Sets the time constant of the PT1 filter for integrator feedback.

The integrator of the speed/velocity controller is re-parameterized to become a PT1 filter through a feedback element (1st Order low pass filter characteristics).

The following applies:

p1494 < 0.25 (2 * p0115[1]) --> the PT1 filter is not active - the pure integrator is effective.

p1494 >= 0.25 (2 * p0115[1]) --> the PT1 filter is active and has replaced the pure integrator.

Note: Applications:

Motion at zero setpoint and dominant stiction can be suppressed but this has a negative impact on the remaining setpoint-actual value difference. This can be used, for example, to avoid oscillation of a position-controlled axis at standstill (stick-slip effect) or overshoot when traversing (moving) in micrometer steps.

Also prevents tension/stressing for axes that are mechanically and rigidly coupled with one another (e.g. for synchronous spindles, master - slave axes).

© Siemens AG, 2005. All rights reserved

p1494[0...n] Velocity controller integrator feedback time constant / n_ctr integ_fdbk T

SERVO (Lin)	**Can be changed:** U, T		**Access level:** 2
	Data type: Floating Point	**Data set:** DDS	**Function diagram:** 5040, 5210
	P-Group: Closed-loop control	**Units group:** TIME_M3	**Unit selection:** -
	Min	**Max**	**Factory setting**
	0.00 [ms]	1000.00 [ms]	0.00 [ms]

Description: Sets the time constant of the PT1 filter for integrator feedback.

The integrator of the speed/velocity controller is re-parameterized to become a PT1 filter through a feedback element (1st Order low pass filter characteristics).

The following applies:

p1494 < 0.25 (2 * p0115[1]) --> the PT1 filter is not active - the pure integrator is effective.

p1494 >= 0.25 (2 * p0115[1]) --> the PT1 filter is active and has replaced the pure integrator.

Note: Applications:

Motion at zero setpoint and dominant stiction can be suppressed but this has a negative impact on the remaining setpoint-actual value difference. This can be used, for example, to avoid oscillation of a position-controlled axis at standstill (stick-slip effect) or overshoot when traversing (moving) in micrometer steps.

Also prevents tension/stressing for axes that are mechanically and rigidly coupled with one another (e.g. for synchronous spindles, master - slave axes).

p1495[0...n] CI: Acceleration pre-controlling, speed change each 1 s / a_prectrl dn/1s

VECTOR (n/M)	**Can be changed:** T		**Access level:** 3
	Data type: Unsigned32	**Data set:** CDS	**Function diagram:** 6031
	P-Group: Closed-loop control	**Units group:** -	**Unit selection:** -
	Min	**Max**	**Factory setting**
	-	-	0

Description: Sets the signal source for the speed change per second for the acceleration pre-control.

Dependency: The signal source for the acceleration is activated with p1400.2 = 1.

For p1400.2 = 0, the acceleration pre-control is calculated from the speed setpoint change from r0062.

For p1400.2 = 0 and activate reference model (p1400.3 = 1) the acceleration pre-control is switched-out.

Refer to: p1400, p1496

Note: If the acceleration is entered as external signal, then the accelerating torque is calculated as follows (r1518):

r1518 = acceleration (% of p2000) / 100 % * p2000 / p0311 * r0345 / 1 s * r0333

p1496[0...n] Acceleration pre-control scaling / a_before scaling

VECTOR (n/M)	**Can be changed:** U, T		**Access level:** 3
	Data type: Floating Point	**Data set:** DDS	**Function diagram:** 6031
	P-Group: Closed-loop control	**Units group:** PERCENT	**Unit selection:** -
	Min	**Max**	**Factory setting**
	0.0 [%]	10000.0 [%]	0.0 [%]

Description: Sets the scaling for the acceleration pre-control of the speed/velocity controller.

Dependency: When the reference model is activate (p1400.3 = 1) and for an internal acceleration pre-control (p1400.2 = 0), the acceleration pre-control is switched-out (disabled). The reference model (p1400.3 = 1) and external acceleration pre-control (p1400.2 = 1) can be operated together.

Refer to: p0341, p0342

Note: The acceleration pre-control may not be used if the speed setpoint manifests significant ripple (e.g. analog setpoint) and the rounding-off in the speed ramp-function generator is disabled.

We also recommend that the pre-control mode is not used if there is gearbox backlash.

© Siemens AG, 2005. All rights reserved

p1498[0...n] Load moment of inertia / Load mom of inert

SERVO	**Can be changed:** U, T		**Access level:** 3
	Data type: Floating Point	**Data set:** DDS	**Function diagram:** -
	P-Group: Closed-loop control	**Units group:** INERTIA	**Unit selection:** -
	Min	**Max**	**Factory setting**
	0.00000 [kgm²]	100000.00000 [kgm²]	0.00000 [kgm²]

Description: Sets the load moment of inertia / the mass.

Note: (p0341 * p0342) + p1498 influence the speed-torque pre-control in sensorless operation.

p1498[0...n] Load mass / Load mom of inert

SERVO (Lin)	**Can be changed:** U, T		**Access level:** 3
	Data type: Floating Point	**Data set:** DDS	**Function diagram:** -
	P-Group: Closed-loop control	**Units group:** MASS	**Unit selection:** -
	Min	**Max**	**Factory setting**
	0.00000 [kg]	10000.00000 [kg]	0.00000 [kg]

Description: Sets the load moment of inertia / the mass.

Note: (p0341 * p0342) + p1498 influence the speed-torque pre-control in sensorless operation.

p1499[0...n] Accelerating for torque control, scaling / a for M_ctrl scal

VECTOR (n/M)	**Can be changed:** U, T		**Access level:** 3
	Data type: Floating Point	**Data set:** DDS	**Function diagram:** -
	P-Group: Closed-loop control	**Units group:** PERCENT	**Unit selection:** -
	Min	**Max**	**Factory setting**
	0.0 [%]	400.0 [%]	100.0 [%]

Description: Sets the scaling for the acceleration integrator at low speeds (only for sensorless torque control).

Dependency: Refer to: p0341, p0342

p1500[0...n] Macro Connector Inputs (CI) for torque setpoints / Macro CI M_set

SERVO, VECTOR	**Can be changed:** C2(1), T		**Access level:** 1
	Data type: Unsigned32	**Data set:** CDS	**Function diagram:** -
	P-Group: Commands	**Units group:** -	**Unit selection:** -
	Min	**Max**	**Factory setting**
	0	999999	0

Description: Runs the appropriate ACX file on the CompactFlash card.

The Connector Inputs (CI) for the torque setpoints of the appropriate Command Data Set (CDS) are appropriately interconnected.

The selected ACX file must be located in the following directory:

... /PMACROS/<drive object>/P1500/PMxxxxxx.ACX

Example:

p1500 = 6 --> the file PM000006.ACX is run.

Dependency: The ACX file to be run must be created according to the definition for ACX macros and must be saved in the directory intended on the CompactFlash card.

Refer to: p0015, p0700, p1000, r8573

Notice: No errors were issued during fast commissioning (p3900 = 1) when writing to parameters of the QUICK_IBN group!

Note: The macros in the specified directory are displayed in r8573.

Macros available as standard are described in the technical documentation of the particular product.

CI: Connector Input

© Siemens AG, 2005. All rights reserved

p1500[0...n] Macro Connector Inputs (CI) for force setpoints / Macro CI M_set

SERVO (Lin)	**Can be changed:** C2(1), T		**Access level:** 1
	Data type: Unsigned32	**Data set:** CDS	**Function diagram:** -
	P-Group: Commands	**Units group:** -	**Unit selection:** -
	Min	**Max**	**Factory setting**
	0	999999	0

Description: Runs the appropriate ACX file on the CompactFlash card.
The Connector Inputs (CI) for the torque setpoints of the appropriate Command Data Set (CDS) are appropriately interconnected.
The selected ACX file must be located in the following directory:
... /PMACROS/<drive object>/P1500/PMxxxxxx.ACX
Example:
p1500 = 6 --> the file PM000006.ACX is run.

Dependency: The ACX file to be run must be created according to the definition for ACX macros and must be saved in the directory intended on the CompactFlash card.
Refer to: p0015, p0700, p1000, r8573

Notice: No errors were issued during fast commissioning (p3900 = 1) when writing to parameters of the QUICK_IBN group!

Note: The macros in the specified directory are displayed in r8573.
Macros available as standard are described in the technical documentation of the particular product.
CI: Connector Input

p1501[0...n] BI: Change over between closed-loop speed/torque control / Changeov n/M_ctrl

SERVO, VECTOR (n/M)	**Can be changed:** U, T		**Access level:** 3
	Data type: Unsigned32	**Data set:** CDS	**Function diagram:** 2520, 5060, 6060
	P-Group: Closed-loop control	**Units group:** -	**Unit selection:** -
	Min	**Max**	**Factory setting**
	-	-	0

Description: Sets the signal source for toggling between speed and torque control.

Dependency: The input connectors to enter the torque are provided using p1511, p1512 and p1513.
Refer to: p1300

Caution!: If the closed-loop torque control is not activated (p1300) and a change is made to closed-loop torque control (p1501), OFF1 (p0840) does not have its own braking response but pulse cancellation when standstill is detected (p1226, p1227).

Note: 0 signal: Speed control
1 signal: Torque Control

p1501[0...n] BI: Changeover velocity/force control / Changeov n/M_ctrl

SERVO (Lin)	**Can be changed:** U, T		**Access level:** 3
	Data type: Unsigned32	**Data set:** CDS	**Function diagram:** 2520, 5060, 6060
	P-Group: Closed-loop control	**Units group:** -	**Unit selection:** -
	Min	**Max**	**Factory setting**
	-	-	0

Description: Sets the signal source for toggling between speed and torque control.

Dependency: The input connectors to enter the torque are provided using p1511, p1512 and p1513.
Refer to: p1300

Caution!: If the closed-loop torque control is not activated (p1300) and a change is made to closed-loop torque control (p1501), OFF1 (p0840) does not have its own braking response but pulse cancellation when standstill is detected (p1226, p1227).

Note: 0 signal: Speed control
1 signal: Torque Control

© Siemens AG, 2005. All rights reserved

p1503[0...n] CI: Torque setpoint / M_set

VECTOR (n/M)	**Can be changed:** T		**Access level:** 3
	Data type: Unsigned32	**Data set:** CDS	**Function diagram:** -
	P-Group: Closed-loop control	**Units group:** -	**Unit selection:** -
	Min	**Max**	**Factory setting**
	-	-	0

Description: Sets the signal source for the torque setpoint for torque control.

Note: A change is made to closed-loop torque control if, in p1300, closed-loop torque control was selected or if the selection was made using the changeover source in p1501.

it is also possible to change over in operation using p1501.

r1508 CO: Torque setpoint before supplementary torque / M_set bef. M_suppl

VECTOR (n/M)	**Can be changed:** -		**Access level:** 2
	Data type: Floating Point	**Data set:** -	**Function diagram:** 6060, 6722
	P-Group: Closed-loop control	**Units group:** TORQUE	**Unit selection:** -
	Min	**Max**	**Factory setting**
	- [Nm]	- [Nm]	- [Nm]

Description: Displays the torque setpoint before entering the supplementary torque.

For closed-loop speed control, r1508 corresponds to the speed controller output; for closed-loop torque control, r1508 corresponds to the torque setpoint of the signal source assigned in p1503.

r1509 CO: Torque setpoint before torque limiting / M_set before M_lim

SERVO	**Can be changed:** -		**Access level:** 3
	Data type: Floating Point	**Data set:** -	**Function diagram:** 1590, 5060, 5610
	P-Group: Closed-loop control	**Units group:** TORQUE	**Unit selection:** -
	Min	**Max**	**Factory setting**
	- [Nm]	- [Nm]	- [Nm]

Description: Displays the complete torque/force setpoint before the torque/force limiting (sum from the controller output, supplementary torque/force and if required the pre-control torque/force, sensorless operation).

In the closed-loop speed/velocity controlled mode, p1509 = p1480 + r1515 + pre-controlled torque/force, sensorless operation.

p1509 and p1515 are identical for closed-loop torque/force control.

r1509 CO: Force setpoint before force limiting / M_set before M_lim

SERVO (Lin)	**Can be changed:** -		**Access level:** 3
	Data type: Floating Point	**Data set:** -	**Function diagram:** 1590, 5060, 5610
	P-Group: Closed-loop control	**Units group:** FORCE	**Unit selection:** -
	Min	**Max**	**Factory setting**
	- [N]	- [N]	- [N]

Description: Displays the complete torque/force setpoint before the torque/force limiting (sum from the controller output, supplementary torque/force and if required the pre-control torque/force, sensorless operation).

In the closed-loop speed/velocity controlled mode, p1509 = p1480 + r1515 + pre-controlled torque/force, sensorless operation.

p1509 and p1515 are identical for closed-loop torque/force control.

© Siemens AG, 2005. All rights reserved

p1511[0...n] CI: Supplementary torque 1 / M_suppl 1

SERVO, VECTOR (n/M)

Can be changed: T — **Access level:** 3
Data type: Unsigned32 — **Data set:** CDS — **Function diagram:** 5060, 6060
P-Group: Closed-loop control — **Units group:** - — **Unit selection:** -

Min	Max	Factory setting
-	-	0

Description: Sets the signal source for supplementary torque/force 1.

p1511[0...n] CI: Supplementary force 1 / M_suppl 1

SERVO (Lin)

Can be changed: T — **Access level:** 3
Data type: Unsigned32 — **Data set:** CDS — **Function diagram:** 5060, 6060
P-Group: Closed-loop control — **Units group:** - — **Unit selection:** -

Min	Max	Factory setting
-	-	0

Description: Sets the signal source for supplementary torque/force 1.

p1512[0...n] CI: Supplementary torque 1 scaling / M_suppl 1 scal

SERVO, VECTOR (n/M)

Can be changed: T — **Access level:** 3
Data type: Unsigned32 — **Data set:** CDS — **Function diagram:** 5060, 6060
P-Group: Closed-loop control — **Units group:** - — **Unit selection:** -

Min	Max	Factory setting
-	-	0

Description: Sets the signal source for scaling supplementary torque/force 1.

p1512[0...n] CI: Supplementary force 1 scaling / M_suppl 1 scal

SERVO (Lin)

Can be changed: T — **Access level:** 3
Data type: Unsigned32 — **Data set:** CDS — **Function diagram:** 5060, 6060
P-Group: Closed-loop control — **Units group:** - — **Unit selection:** -

Min	Max	Factory setting
-	-	0

Description: Sets the signal source for scaling supplementary torque/force 1.

p1513[0...n] CI: Supplementary torque 2 / M_suppl 2

SERVO, VECTOR (n/M)

Can be changed: T — **Access level:** 3
Data type: Unsigned32 — **Data set:** CDS — **Function diagram:** 5060, 6060
P-Group: Closed-loop control — **Units group:** - — **Unit selection:** -

Min	Max	Factory setting
-	-	0

Description: Sets the signal source for supplementary torque/force 2.

© Siemens AG, 2005. All rights reserved

p1513[0...n] CI: Supplementary force 2 / M_suppl 2

SERVO (Lin)	**Can be changed:** T		**Access level:** 3
	Data type: Unsigned32	**Data set:** CDS	**Function diagram:** 5060, 6060
	P-Group: Closed-loop control	**Units group:** -	**Unit selection:** -
	Min	**Max**	**Factory setting**
	-	-	0

Description: Sets the signal source for supplementary torque/force 2.

p1514[0...n] Supplementary torque 2 scaling / M_suppl 2 scal

VECTOR (n/M)	**Can be changed:** U, T		**Access level:** 3
	Data type: Floating Point	**Data set:** DDS	**Function diagram:** 6060
	P-Group: Closed-loop control	**Units group:** PERCENT	**Unit selection:** -
	Min	**Max**	**Factory setting**
	-2000.0 [%]	2000.0 [%]	100.0 [%]

Description: Sets the scaling for supplementary torque 2.

r1515 Supplementary torque total / M_suppl total

SERVO, VECTOR (n/M)	**Can be changed:** -		**Access level:** 2
	Data type: Floating Point	**Data set:** -	**Function diagram:** 5040, 5060
	P-Group: Closed-loop control	**Units group:** TORQUE	**Unit selection:** -
	Min	**Max**	**Factory setting**
	- [Nm]	- [Nm]	- [Nm]

Description: Displays the total supplementary torque/force.
The displayed value is the sum of supplementary torque values 1 and 2 (p1515 = p1511 * p1512 + p1513).

r1515 Supplementary force, total / M_suppl total

SERVO (Lin)	**Can be changed:** -		**Access level:** 2
	Data type: Floating Point	**Data set:** -	**Function diagram:** 5040, 5060
	P-Group: Closed-loop control	**Units group:** FORCE	**Unit selection:** -
	Min	**Max**	**Factory setting**
	- [N]	- [N]	- [N]

Description: Displays the total supplementary torque/force.
The displayed value is the sum of supplementary torque values 1 and 2 (p1515 = p1511 * p1512 + p1513).

p1517[0...n] Accelerating torque smoothing time constant / M_accel T_smooth

SERVO	**Can be changed:** U, T		**Access level:** 3
	Data type: Floating Point	**Data set:** DDS	**Function diagram:** 5210
	P-Group: Closed-loop control	**Units group:** TIME_M3	**Unit selection:** -
	Min	**Max**	**Factory setting**
	0.00 [ms]	100.00 [ms]	4.00 [ms]

Description: Sets the smoothing time constant of the accelerating torque/force for sensorless operation.

© Siemens AG, 2005. All rights reserved

p1517[0...n] Acceleration force smoothing time constant / M_accel T_smooth

SERVO (Lin)	**Can be changed:** U, T		**Access level:** 3
	Data type: Floating Point	**Data set:** DDS	**Function diagram:** 5210
	P-Group: Closed-loop control	**Units group:** TIME_M3	**Unit selection:** -
	Min	**Max**	**Factory setting**
	0.00 [ms]	100.00 [ms]	4.00 [ms]

Description: Sets the smoothing time constant of the accelerating torque/force for sensorless operation.

r1518 CO: Accelerating torque / Accel_torque

VECTOR (n/M)	**Can be changed:** -		**Access level:** 3
	Data type: Floating Point	**Data set:** -	**Function diagram:** 6060
	P-Group: Closed-loop control	**Units group:** TORQUE	**Unit selection:** -
	Min	**Max**	**Factory setting**
	- [Nm]	- [Nm]	- [Nm]

Description: Displays the accelerating torque for pre-control of the speed controller.
Dependency: Refer to: p0341, p0342, p1496

p1520[0...n] CO: Torque limit, upper/motoring / M_max upper/mot

SERVO, VECTOR (n/M)	**Can be changed:** U, T		**Access level:** 2
	Data type: Floating Point	**Data set:** DDS	**Function diagram:** 5620, 5630, 6630
	P-Group: Closed-loop control	**Units group:** TORQUE	**Unit selection:** -
	Min	**Max**	**Factory setting**
	-1000000.00 [Nm]	10000000.00 [Nm]	0.00 [Nm]

Description: Sets the fixed upper or torque/force limit when motoring.
Dependency: p1400 bit 4 = 0: top / bottom
p1400 bit 4 = 1: motoring / regenerating
The factory setting depends on p0500.
p0500 = 101 --> set to the maximum value
Otherwise --> set to the rated value
Refer to: p1521, p1522, p1523, p1532, r1538, r1539
Note: For VECTOR drives (refer to p0107):
The torque limit is limited to 400% of the rated motor torque. When automatically calculating the motor/closed-loop control parameters (refer to p0340), the torque limit is set so that it matches the current limit p0640.

p1520[0...n] CO: Force limit upper/motoring / M_max upper/mot

SERVO (Lin)	**Can be changed:** U, T		**Access level:** 2
	Data type: Floating Point	**Data set:** DDS	**Function diagram:** 5620, 5630, 6630
	P-Group: Closed-loop control	**Units group:** FORCE	**Unit selection:** -
	Min	**Max**	**Factory setting**
	-1000000.00 [N]	10000000.00 [N]	0.00 [N]

Description: Sets the fixed upper or torque/force limit when motoring.
Dependency: p1400 bit 4 = 0: top / bottom
p1400 bit 4 = 1: motoring / regenerating
The factory setting depends on p0500.
p0500 = 101 --> set to the maximum value
Otherwise --> set to the rated value
Refer to: p1521, p1522, p1523, p1532, r1538, r1539

© Siemens AG, 2005. All rights reserved

Note: For VECTOR drives (refer to p0107):
The torque limit is limited to 400% of the rated motor torque. When automatically calculating the motor/closed-loop control parameters (refer to p0340), the torque limit is set so that it matches the current limit p0640.

p1521[0...n] CO: Torque limit, lower/regenerative / M_max lower/regen

SERVO, VECTOR (n/M)

Can be changed: U, T		**Access level:** 2
Data type: Floating Point	**Data set:** DDS	**Function diagram:** 5620, 5630, 6630
P-Group: Closed-loop control	**Units group:** TORQUE	**Unit selection:** -
Min	**Max**	**Factory setting**
-1000000.00 [Nm]	10000000.00 [Nm]	0.00 [Nm]

Description: Sets the fixed lower or torque/force limit when regenerating.
Dependency: p1400 bit 4 = 0: top / bottom
p1400 bit 4 = 1: motoring / regenerating
The factory setting depends on p0500.
p0500 = 101 --> set to the maximum value
Otherwise --> set to the rated value
Refer to: p1520, p1522, p1523, p1532
Note: For VECTOR drives (refer to p0107):
The torque limit is limited to 400% of the rated motor torque. When automatically calculating the motor/closed-loop control parameters (refer to p0340), the torque limit is set so that it matches the current limit p0640.

p1521[0...n] CO: Force limit, lower/regenerative / M_max lower/regen

SERVO (Lin)

Can be changed: U, T		**Access level:** 2
Data type: Floating Point	**Data set:** DDS	**Function diagram:** 5620, 5630, 6630
P-Group: Closed-loop control	**Units group:** FORCE	**Unit selection:** -
Min	**Max**	**Factory setting**
-1000000.00 [N]	10000000.00 [N]	0.00 [N]

Description: Sets the fixed lower or torque/force limit when regenerating.
Dependency: p1400 bit 4 = 0: top / bottom
p1400 bit 4 = 1: motoring / regenerating
The factory setting depends on p0500.
p0500 = 101 --> set to the maximum value
Otherwise --> set to the rated value
Refer to: p1520, p1522, p1523, p1532
Note: For VECTOR drives (refer to p0107):
The torque limit is limited to 400% of the rated motor torque. When automatically calculating the motor/closed-loop control parameters (refer to p0340), the torque limit is set so that it matches the current limit p0640.

p1522[0...n] CI: Torque limit, upper/motoring / M_max upper/mot

SERVO, VECTOR (n/M)

Can be changed: T		**Access level:** 3
Data type: Unsigned32	**Data set:** CDS	**Function diagram:** 1610, 5620, 5630, 6630
P-Group: Closed-loop control	**Units group:** -	**Unit selection:** -
Min	**Max**	**Factory setting**
-	-	1520[0]

Description: Sets the signal source for the upper or torque/force limit when motoring.
Dependency: p1400 bit 4 = 0: top / bottom
p1400 bit 4 = 1: motoring / regenerating
Refer to: p1520, p1521, p1523, p1532

© Siemens AG, 2005. All rights reserved

p1523[0...n] CI: Torque limit, lower/regenerative / M_max lower/regen

SERVO, VECTOR (n/M)	**Can be changed:** T		**Access level:** 3
	Data type: Unsigned32	**Data set:** CDS	**Function diagram:** 1610, 5620, 5630, 6630
	P-Group: Closed-loop control	**Units group:** -	**Unit selection:** -
	Min	**Max**	**Factory setting**
	-	-	1521[0]

Description: Sets the signal source for the lower or torque/force limit when regenerating.

Dependency: p1400 bit 4 = 0: top / bottom
p1400 bit 4 = 1: motoring / regenerating
Refer to: p1520, p1521, p1522, p1532

p1524[0...n] CO: Torque limit, upper/motoring, scaling / M_max up/mot scal

VECTOR (n/M)	**Can be changed:** U, T		**Access level:** 3
	Data type: Floating Point	**Data set:** DDS	**Function diagram:** 5620, 5630, 6630
	P-Group: Closed-loop control	**Units group:** PERCENT	**Unit selection:** -
	Min	**Max**	**Factory setting**
	-2000.0 [%]	2000.0 [%]	100.0 [%]

Description: Sets the scaling for the upper torque limit or the motoring torque limit when motoring.

Dependency: p1400 bit 4 = 0: top / bottom
p1400 bit 4 = 1: motoring / regenerating

Note: This parameter can be freely interconnected.
The value has the above significance if it is interconnected from connector input p1528.

p1525[0...n] CO: Torque limit, lower/regenerating scaling / M_max low/gen scal

VECTOR (n/M)	**Can be changed:** U, T		**Access level:** 3
	Data type: Floating Point	**Data set:** DDS	**Function diagram:** 5620, 5630, 6630
	P-Group: Closed-loop control	**Units group:** PERCENT	**Unit selection:** -
	Min	**Max**	**Factory setting**
	-2000.0 [%]	2000.0 [%]	100.0 [%]

Description: Sets the scaling for the lower torque limit or the torque limit when regenerating.

Dependency: p1400 bit 4 = 0: top / bottom
p1400 bit 4 = 1: motoring / regenerating

Note: This parameter can be freely interconnected.
The value has the above significance if it is interconnected from connector input p1528.

r1526 Torque limit, upper/motoring without offset / M_max up. w/o offs

SERVO, VECTOR (n/M)	**Can be changed:** -		**Access level:** 3
	Data type: Floating Point	**Data set:** -	**Function diagram:** 5620, 5630, 6630, 6640
	P-Group: Closed-loop control	**Units group:** TORQUE	**Unit selection:** -
	Min	**Max**	**Factory setting**
	- [Nm]	- [Nm]	- [Nm]

Description: Displays the upper torque/force limit of all torque/force limits without offset.

Dependency: p1400 bit 4 = 0: top / bottom
p1400 bit 4 = 1: motoring / regenerating
Refer to: p1520, p1521, p1522, p1523, p1528, p1529

© Siemens AG, 2005. All rights reserved

r1526 Force limit, upper/motoring without offset / M_max up. w/o offs

SERVO (Lin)

Can be changed: -
Access level: 3
Data type: Floating Point
Data set: -
Function diagram: 5620, 5630, 6630, 6640
P-Group: Closed-loop control
Units group: FORCE
Unit selection: -

Min	Max	Factory setting
- [N]	- [N]	- [N]

Description: Displays the upper torque/force limit of all torque/force limits without offset.
Dependency: p1400 bit 4 = 0: top / bottom
p1400 bit 4 = 1: motoring / regenerating
Refer to: p1520, p1521, p1522, p1523, p1528, p1529

r1527 Torque limit, lower/regenerative without offset / M_max low w/o offs

SERVO, VECTOR (n/M)

Can be changed: -
Access level: 3
Data type: Floating Point
Data set: -
Function diagram: 5620, 5630, 6630, 6640
P-Group: Closed-loop control
Units group: TORQUE
Unit selection: -

Min	Max	Factory setting
- [Nm]	- [Nm]	- [Nm]

Description: Displays the lower torque/force limit of all torque/force limits without offset.
Dependency: p1400 bit 4 = 0: top / bottom
p1400 bit 4 = 1: motoring / regenerating
Refer to: p1520, p1521, p1522, p1523, p1528, p1529

r1527 Force limit, lower/regenerative without offset / M_max low w/o offs

SERVO (Lin)

Can be changed: -
Access level: 3
Data type: Floating Point
Data set: -
Function diagram: 5620, 5630, 6630, 6640
P-Group: Closed-loop control
Units group: FORCE
Unit selection: -

Min	Max	Factory setting
- [N]	- [N]	- [N]

Description: Displays the lower torque/force limit of all torque/force limits without offset.
Dependency: p1400 bit 4 = 0: top / bottom
p1400 bit 4 = 1: motoring / regenerating
Refer to: p1520, p1521, p1522, p1523, p1528, p1529

p1528[0...n] CI: Torque limit, upper/motoring, scaling / M_max up/mot scal

SERVO

Can be changed: T
Access level: 3
Data type: Unsigned32
Data set: CDS
Function diagram: 1610, 5620, 5630
P-Group: Closed-loop control
Units group: -
Unit selection: -

Min	Max	Factory setting
-	-	1

Description: Sets the signal source for the scaling of the upper or motoring torque/force limit in p1522.
Dependency: p1400 bit 4 = 0: top / bottom
p1400 bit 4 = 1: motoring / regenerating

© Siemens AG, 2005. All rights reserved

p1528[0...n] CI: Torque limit upper scaling / M_max upper scal

VECTOR (n/M)	**Can be changed:** T		**Access level:** 3
	Data type: Unsigned32	**Data set:** CDS	**Function diagram:** 6630
	P-Group: Closed-loop control	**Units group:** -	**Unit selection:** -
	Min	**Max**	**Factory setting**
	-	-	1524[0]

Description: Sets the signal source for the scaling of the upper torque limit in p1522.

p1529[0...n] CI: Torque limit, lower/regenerating scaling / M_max low/gen scal

SERVO	**Can be changed:** T		**Access level:** 3
	Data type: Unsigned32	**Data set:** CDS	**Function diagram:** 1610, 5620, 5630
	P-Group: Closed-loop control	**Units group:** -	**Unit selection:** -
	Min	**Max**	**Factory setting**
	-	-	1

Description: Sets the signal source for the scaling of the lower or torque/force limit in p1523 when regenerating.
Dependency: p1400 bit 4 = 0: top / bottom
p1400 bit 4 = 1: motoring / regenerating

p1529[0...n] CI: Torque limit lower scaling / M_max lower scal

VECTOR (n/M)	**Can be changed:** T		**Access level:** 3
	Data type: Unsigned32	**Data set:** CDS	**Function diagram:** 6630
	P-Group: Closed-loop control	**Units group:** -	**Unit selection:** -
	Min	**Max**	**Factory setting**
	-	-	1525[0]

Description: Sets the signal source for the scaling of the lower torque limit in p1523.

p1530[0...n] Power limit, motoring / P_max mot

SERVO, VECTOR (n/M)	**Can be changed:** U, T		**Access level:** 2
	Data type: Floating Point	**Data set:** DDS	**Function diagram:** 5640, 6640
	P-Group: Closed-loop control	**Units group:** POWER_P3	**Unit selection:** -
	Min	**Max**	**Factory setting**
	0.00 [kW]	100000.00 [kW]	0.00 [kW]

Description: Sets the power limit when motoring.
Dependency: The factory setting depends on p0500.
p0500 = 101 --> set to the maximum value
Otherwise --> set to the rated value
Refer to: p1531
Note: For VECTOR drives (refer to p0107):
The power limit is limited to 300% rated motor power.

© Siemens AG, 2005. All rights reserved

p1531[0...n] Power limit, regenerating / P_max gen

SERVO, VECTOR (n/M)	**Can be changed:** U, T		**Access level:** 2
	Data type: Floating Point	**Data set:** DDS	**Function diagram:** 5640, 6640
	P-Group: Closed-loop control	**Units group:** POWER_P3	**Unit selection:** -
	Min	**Max**	**Factory setting**
	-100000.00 [kW]	-0.01 [kW]	-0.01 [kW]

Description: Sets the regenerative power limit.

Dependency: The factory setting depends on p0500.
p0500 = 101 --> set to the maximum value
Otherwise --> set to the rated value
Refer to: p1530

Note: For VECTOR drives (refer to p0107):
The power limit is limited to 300% rated motor power.

p1532[0...n] CO: Torque limit, offset / M_max offset

SERVO	**Can be changed:** U, T		**Access level:** 3
	Data type: Floating Point	**Data set:** DDS	**Function diagram:** 5620, 5630, 8012
	P-Group: Closed-loop control	**Units group:** TORQUE	**Unit selection:** -
	Min	**Max**	**Factory setting**
	-100000.00 [Nm]	100000.00 [Nm]	0.00 [Nm]

Description: Sets the torque/force offset for the torque/force limit.

Dependency: Refer to: p1520, p1521, p1522, p1523, p1528, p1529

p1532[0...n] CO: Force offset, force limit / M_max offset

SERVO (Lin)	**Can be changed:** U, T		**Access level:** 3
	Data type: Floating Point	**Data set:** DDS	**Function diagram:** 5620, 5630, 8012
	P-Group: Closed-loop control	**Units group:** FORCE	**Unit selection:** -
	Min	**Max**	**Factory setting**
	-100000.00 [N]	100000.00 [N]	0.00 [N]

Description: Sets the torque/force offset for the torque/force limit.

Dependency: Refer to: p1520, p1521, p1522, p1523, p1528, p1529

r1533 Current limit, torque-generating, total / Iq_max total

SERVO, VECTOR (n/M)	**Can be changed:** -		**Access level:** 3
	Data type: Floating Point	**Data set:** -	**Function diagram:** 5640, 5722, 6640
	P-Group: Displays, signals	**Units group:** CURRENT_AC_EFF	**Unit selection:** -
	Min	**Max**	**Factory setting**
	- [Aeff]	- [Aeff]	- [Aeff]

Description: Displays the maximum torque/force generating current as a result if all current limits.

© Siemens AG, 2005. All rights reserved

r1534 **CO: Torque limit, upper total / M_max upper total**

SERVO	**Can be changed:** -		**Access level:** 3
	Data type: Floating Point	**Data set:** -	**Function diagram:** 1610, 5620, 5630, 5640
	P-Group: Closed-loop control	**Units group:** TORQUE	**Unit selection:** -
	Min	**Max**	**Factory setting**
	- [Nm]	- [Nm]	- [Nm]

Description: Displays the upper torque/force limit of all torque/force limits.
Dependency: Refer to: p1520, p1521, p1522, p1523, p1528, p1529, p1532

r1534 **CO: Force limit, upper, total / M_max upper total**

SERVO (Lin)	**Can be changed:** -		**Access level:** 3
	Data type: Floating Point	**Data set:** -	**Function diagram:** 1610, 5620, 5630, 5640
	P-Group: Closed-loop control	**Units group:** FORCE	**Unit selection:** -
	Min	**Max**	**Factory setting**
	- [N]	- [N]	- [N]

Description: Displays the upper torque/force limit of all torque/force limits.
Dependency: Refer to: p1520, p1521, p1522, p1523, p1528, p1529, p1532

r1535 **CO: Torque limit, lower total / M_max lower total**

SERVO	**Can be changed:** -		**Access level:** 3
	Data type: Floating Point	**Data set:** -	**Function diagram:** 1610, 5620, 5630, 5640
	P-Group: Closed-loop control	**Units group:** TORQUE	**Unit selection:** -
	Min	**Max**	**Factory setting**
	- [Nm]	- [Nm]	- [Nm]

Description: Displays the lower torque/force limit of all torque/force limits.
Dependency: Refer to: p1520, p1521, p1522, p1523, p1528, p1529, p1532

r1535 **CO: Force limit, lower, total / M_max lower total**

SERVO (Lin)	**Can be changed:** -		**Access level:** 3
	Data type: Floating Point	**Data set:** -	**Function diagram:** 1610, 5620, 5630, 5640
	P-Group: Closed-loop control	**Units group:** FORCE	**Unit selection:** -
	Min	**Max**	**Factory setting**
	- [N]	- [N]	- [N]

Description: Displays the lower torque/force limit of all torque/force limits.
Dependency: Refer to: p1520, p1521, p1522, p1523, p1528, p1529, p1532

r1536 **Torque limit, torque-generating, maximum / Isq_max**

VECTOR (n/M)	**Can be changed:** -		**Access level:** 4
	Data type: Floating Point	**Data set:** -	**Function diagram:** 6640, 6710
	P-Group: Closed-loop control	**Units group:** CURRENT_AC_EFF	**Unit selection:** -
	Min	**Max**	**Factory setting**
	- [Aeff]	- [Aeff]	- [Aeff]

Description: Displays the maximum limit for the torque-generating current component.

© Siemens AG, 2005. All rights reserved

r1537 Torque limit, torque-generating, minimum / Isq_min

VECTOR (n/M)

Can be changed: -
Access level: 4
Data type: Floating Point
Data set: -
Function diagram: 6640, 6710
P-Group: Closed-loop control
Units group: CURRENT_AC_EFF
Unit selection: -

Min	Max	Factory setting
- [Aeff]	- [Aeff]	- [Aeff]

Description: Displays the minimum limit for the torque-generating current component.

r1538 CO: Upper effective torque limit / M_max upper eff

SERVO, VECTOR (n/M)

Can be changed: -
Access level: 2
Data type: Floating Point
Data set: -
Function diagram: 1590, 1610, 1750, 5610, 5650, 5714, 6040, 6060, 6640, 8012
P-Group: Closed-loop control
Units group: TORQUE
Unit selection: -

Min	Max	Factory setting
- [Nm]	- [Nm]	- [Nm]

Description: Displays the actually effective upper torque/force limit.

Note: The effective upper torque limit is reduced with respect to the upper torque limit p1520, if the current limit p0640 is reduced or the rated magnetizing current of the induction motor p0320 is increased.
For VECTOR drives (refer to p0107), this is possibly the case for rotating measurements (refer to p1960).
The torque limit p1520 can be re-calculated using p0340 = 1, 3 or 5.

r1538 CO: Upper force limit effective / M_max upper eff

SERVO (Lin)

Can be changed: -
Access level: 2
Data type: Floating Point
Data set: -
Function diagram: 1590, 1610, 1750, 5610, 5650, 5714, 6040, 6060, 6640, 8012
P-Group: Closed-loop control
Units group: FORCE
Unit selection: -

Min	Max	Factory setting
- [N]	- [N]	- [N]

Description: Displays the actually effective upper torque/force limit.

Note: The effective upper torque limit is reduced with respect to the upper torque limit p1520, if the current limit p0640 is reduced or the rated magnetizing current of the induction motor p0320 is increased.
For VECTOR drives (refer to p0107), this is possibly the case for rotating measurements (refer to p1960).
The torque limit p1520 can be re-calculated using p0340 = 1, 3 or 5.

r1539 CO: Lower effective torque limit / M_max lower eff

SERVO, VECTOR (n/M)

Can be changed: -
Access level: 2
Data type: Floating Point
Data set: -
Function diagram: 1590, 1610, 1750, 5610, 5650, 5714, 6040, 6060, 6640, 8012
P-Group: Closed-loop control
Units group: TORQUE
Unit selection: -

Min	Max	Factory setting
- [Nm]	- [Nm]	- [Nm]

Description: Displays the actually effective lower torque/force limit.

Note: The effective lower torque limit is reduced with respect to the selected lower torque limit p1521 if the current limit p0640 is reduced or the rated magnetizing current of the induction motor p0320 is increased.
For VECTOR drives (refer to p0107), this is possibly the case for rotating measurements (refer to p1960).
The torque limit p1520 can be re-calculated using p0340 = 1, 3 or 5.

© Siemens AG, 2005. All rights reserved

r1539 CO: Lower force limit effective / M_max lower eff

SERVO (Lin)

Can be changed: -		**Access level:** 2
Data type: Floating Point	**Data set:** -	**Function diagram:** 1590, 1610, 1750, 5610, 5650, 5714, 6040, 6060, 6640, 8012
P-Group: Closed-loop control	**Units group:** FORCE	**Unit selection:** -
Min	**Max**	**Factory setting**
- [N]	- [N]	- [N]

Description: Displays the actually effective lower torque/force limit.

Note: The effective lower torque limit is reduced with respect to the selected lower torque limit p1521 if the current limit p0640 is reduced or the rated magnetizing current of the induction motor p0320 is increased.

For VECTOR drives (refer to p0107), this is possibly the case for rotating measurements (refer to p1960).

The torque limit p1520 can be re-calculated using p0340 = 1, 3 or 5.

p1540[0...n] CI: Torque limit upper scaling / M_max upper scal

VECTOR (n/M)

Can be changed: T		**Access level:** 3
Data type: Unsigned32	**Data set:** CDS	**Function diagram:** 6060
P-Group: Closed-loop control	**Units group:** -	**Unit selection:** -
Min	**Max**	**Factory setting**
-	-	1

Description: Sets the signal source for the scaling of the upper torque limiting to limit the speed controller output.

p1541[0...n] CI: Torque limit lower scaling / M_max lower scal

VECTOR (n/M)

Can be changed: T		**Access level:** 3
Data type: Unsigned32	**Data set:** CDS	**Function diagram:** 6060
P-Group: Closed-loop control	**Units group:** -	**Unit selection:** -
Min	**Max**	**Factory setting**
-	-	1

Description: Sets the signal source for the scaling of the lower torque limiting to limit the speed controller output.

p1542[0...n] CI: Travel to a fixed endstop, torque reduction / TfS M_red

SERVO

Can be changed: T		**Access level:** 3
Data type: Unsigned32	**Data set:** CDS	**Function diagram:** 5610
P-Group: Setpoints	**Units group:** -	**Unit selection:** -
Min	**Max**	**Factory setting**
-	-	0

Description: Sets the signal source for the torque/force reduction when traversing to a fixed endstop. This value is converted into a factor and is interconnected to the scaling of the torque/force limits.

Dependency: Refer to: p1528, p1529, r1543, p1544, p1545

r1543 CO: Travel to fixed endstop, torque scaling / TfS M scal

SERVO

Can be changed: -		**Access level:** 3
Data type: Floating Point	**Data set:** -	**Function diagram:** 5610
P-Group: Setpoints	**Units group:** PERCENT	**Unit selection:** -
Min	**Max**	**Factory setting**
- [%]	- [%]	- [%]

Description: Displays the internally converted factor to interconnect to the scaling of the torque/force limits.

Dependency: Refer to: p1528, p1529, p1542, p1544, p1545

© Siemens AG, 2005. All rights reserved

p1544 Travel to fixed endstop evaluation, torque reduction / TfS M_red eval

SERVO	**Can be changed:** U, T		**Access level:** 3
	Data type: Floating Point	**Data set:** -	**Function diagram:** 5610
	P-Group: Setpoints	**Units group:** PERCENT	**Unit selection:** -
	Min	**Max**	**Factory setting**
	0 [%]	65535 [%]	100 [%]

Description: Sets the evaluation for the torque/force reduction when traversing to a fixed endstop.
Dependency: Refer to: p1528, p1529, p1542, r1543, p1545
Note: 4000 hex (16384 dec) in the MOMRED control word corresponds to a reduction by the percentage specified in this parameter.

p1545[0...n] BI: Activates travel to a fixed endstop / TfS activation

SERVO	**Can be changed:** T		**Access level:** 3
	Data type: Unsigned32	**Data set:** CDS	**Function diagram:** 2444, 2520
	P-Group: Commands	**Units group:** -	**Unit selection:** -
	Min	**Max**	**Factory setting**
	-	-	0

Description: Sets the signal source to activate/de-activate the "travel to fixed endstop" function
1: Travel to fixed endstop is active
0: Travel to fixed endstop is inactive
Dependency: Refer to: p1542, r1543, p1544

p1546 Speed threshold, motoring/regenerating / n_thresh mot/regen

SERVO	**Can be changed:** U, T		**Access level:** 2
	Data type: Floating Point	**Data set:** -	**Function diagram:** -
	P-Group: Functions	**Units group:** SPEED_ROT	**Unit selection:** -
	Min	**Max**	**Factory setting**
	0.0 [1/min]	210000.0 [1/min]	20.0 [1/min]

Description: Sets the speed/velocity threshold for the motoring/regenerating limit.
For speeds/velocities where the absolute value is less than p1546, then the following applies:
- for p1400.13 = 0: Motoring limit (speed/velocity threshold is compared to the speed/velocity actual value).
- for p1400.13 = 1: Regenerative limiting (speed/velocity threshold is compared to the speed/velocity setpoint).

p1546 Velocity threshold motoring/regenerating / n_thresh mot/regen

SERVO (Lin)	**Can be changed:** U, T		**Access level:** 2
	Data type: Floating Point	**Data set:** -	**Function diagram:** -
	P-Group: Functions	**Units group:** SPEED_LIN_METRIC_P3	**Unit selection:** -
	Min	**Max**	**Factory setting**
	0.0 [m/min]	1000.0 [m/min]	0.2 [m/min]

Description: Sets the speed/velocity threshold for the motoring/regenerating limit.
For speeds/velocities where the absolute value is less than p1546, then the following applies:
- for p1400.13 = 0: Motoring limit (speed/velocity threshold is compared to the speed/velocity actual value).
- for p1400.13 = 1: Regenerative limiting (speed/velocity threshold is compared to the speed/velocity setpoint).

© Siemens AG, 2005. All rights reserved

r1547[0...1] Torque limit for speed controller output / M_max outp n_ctrl

VECTOR (n/M)

Can be changed: -		**Access level:** 3
Data type: Floating Point	**Data set:** -	**Function diagram:** -
P-Group: Closed-loop control	**Units group:** TORQUE	**Unit selection:** -
Min	**Max**	**Factory setting**
- [Nm]	- [Nm]	- [Nm]

Description: Displays the torque limit to limit the speed controller output.

Index: [0] = Upper limit
[1] = Lower limit

r1548[0...1] Stall current limit, torque-generating, maximum / Isq_max stall

VECTOR (n/M)

Can be changed: -		**Access level:** 4
Data type: Floating Point	**Data set:** -	**Function diagram:** -
P-Group: Closed-loop control	**Units group:** CURRENT_AC_EFF	**Unit selection:** -
Min	**Max**	**Factory setting**
- [Aeff]	- [Aeff]	- [Aeff]

Description: Displays the limit for the torque-generating current component using the stall calculation, the current limit of the Motor Module as well as the parameterization in p0640.

Index: [0] = Upper limit
[1] = Lower limit

p1550[0...n] BI: Accept the actual torque as torque offset / Accept act. torque

SERVO

Can be changed: T		**Access level:** 2
Data type: Unsigned32	**Data set:** CDS	**Function diagram:** -
P-Group: Commands	**Units group:** -	**Unit selection:** -
Min	**Max**	**Factory setting**
-	-	9718.23

Description: For a positive edge, the actual torque (r0079[0]) at this instant in time is used instead of the torque offset from p1532 as long as p1550 remains at 1.

p1569[0...n] CI: Friction characteristic, input control / Frict input ctrl

SERVO, VECTOR (n/M)

Can be changed: T		**Access level:** 2
Data type: Unsigned32	**Data set:** CDS	**Function diagram:** 7010
P-Group: Functions	**Units group:** -	**Unit selection:** -
Min	**Max**	**Factory setting**
-	-	3841[0]

Description: Sets the signal source to use the torque of the friction characteristic in the closed-loop control.

Dependency: Refer to: p3842

p1570[0...n] CO: Flux setpoint / Flux setpoint

VECTOR (n/M)

Can be changed: U, T		**Access level:** 2
Data type: Floating Point	**Data set:** DDS	**Function diagram:** 6722
P-Group: Closed-loop control	**Units group:** FLUX_RELATIVE	**Unit selection:** -
Min	**Max**	**Factory setting**
50.0 [%]	200.0 [%]	100.0 [%]

Description: Sets the flux setpoint referred to rated motor flux.

Note: For p1570 > 100 %, the flux setpoint increases as a function of the load from 100 % (no-load operation) to the setting in p1570 (above rated motor torque).

© Siemens AG, 2005. All rights reserved

p1574[0...n] Voltage reserve dynamic / U_reserve dyn

VECTOR (n/M)	**Can be changed:** U, T		**Access level:** 3
	Data type: Floating Point	**Data set:** DDS	**Function diagram:** 6723, 6724
	P-Group: Closed-loop control	**Units group:** VOLTAGE_AC_EFF	**Unit selection:** -
	Min	**Max**	**Factory setting**
	0 [Veff]	150 [Veff]	10 [Veff]

Description: Sets a dynamic voltage reserve.

Note: Increasing the reserve reduces the steady-state maximum output voltage (r0071).

p1580[0...n] Efficiency optimization / Efficiency opt.

VECTOR (n/M)	**Can be changed:** U, T		**Access level:** 2
	Data type: Floating Point	**Data set:** DDS	**Function diagram:** 6722
	P-Group: Closed-loop control	**Units group:** PERCENT	**Unit selection:** -
	Min	**Max**	**Factory setting**
	0 [%]	100 [%]	0 [%]

Description: Sets the efficiency optimization. When optimizing the efficiency, the flux setpoint of the closed-loop control is adapted as a function of the load.

For p1580 = 100 %, under no-load operating conditions, the flux setpoint is reduced to 50 % of the rated motor flux.

Note: It only makes sense to activate this function if the dynamic response requirements of the speed controller are low. In order to avoid oscillations, if required, the speed controller parameters should be adapted (increase Zn, reduce Kp).

Further, the smoothing time of the flux setpoint filter (p1582) should be increased.

p1582[0...n] Flux setpoint smoothing time / Flux setp T_smth

VECTOR (n/M)	**Can be changed:** U, T		**Access level:** 3
	Data type: Floating Point	**Data set:** DDS	**Function diagram:** 6722
	P-Group: Closed-loop control	**Units group:** TIME_M3	**Unit selection:** -
	Min	**Max**	**Factory setting**
	4 [ms]	5000 [ms]	15 [ms]

Description: Sets the smoothing time for the flux setpoint.

r1583 Flux setpoint smoothed / Flux setp smooth

VECTOR (n/M)	**Can be changed:** -		**Access level:** 4
	Data type: Floating Point	**Data set:** -	**Function diagram:** 6722, 6723
	P-Group: Closed-loop control	**Units group:** FLUX_RELATIVE	**Unit selection:** -
	Min	**Max**	**Factory setting**
	- [%]	- [%]	- [%]

Description: Displays the smoothed flux setpoint. The value is referred to the rated motor flux.

© Siemens AG, 2005. All rights reserved

p1584[0...n] Flux setpoint smoothing time for field-weakening operation / Flx setp T_smth Fs

VECTOR (n/M)	**Can be changed:** U, T		**Access level:** 3
	Data type: Floating Point	**Data set:** DDS	**Function diagram:** 6722
	P-Group: Closed-loop control	**Units group:** TIME_M3	**Unit selection:** -
	Min	**Max**	**Factory setting**
	0 [ms]	20000 [ms]	0 [ms]

Description: Sets the smoothing time for the flux setpoint in the field-weakening range

Recommendation: Smoothing should be especially used if there is no regenerative feedback into the line supply. This means that the DC link voltage can quickly increase in regenerative operation

Note: Only the flux setpoint rise is smoothed

r1589 Field-weakening current, pre-control value / FieldWkCurrPrectrl

VECTOR (n/M)	**Can be changed:** -		**Access level:** 4
	Data type: Floating Point	**Data set:** -	**Function diagram:** 6724
	P-Group: Closed-loop control	**Units group:** CURRENT_AC_EFF	**Unit selection:** -
	Min	**Max**	**Factory setting**
	- [Aeff]	- [Aeff]	- [Aeff]

Description: Displays the pre-control value for the field weakening current.

p1590[0...n] Flux controller P gain / Flux controller Kp

SERVO	**Can be changed:** U, T		**Access level:** 3
	Data type: Floating Point	**Data set:** DDS	**Function diagram:** 5722
	P-Group: Closed-loop control	**Units group:** GAIN_FLUX_CTRL	**Unit selection:** p0528
	Min	**Max**	**Factory setting**
	0.0 [A/Vs]	999999.0 [A/Vs]	10.0 [A/Vs]

Description: Sets the proportional gain of the flux controller.

Note: For synchronous motors, this parameters has no effect.
The value is automatically pre-assigned dependent on the motor when the drive system is first commissioned.
When calculating controller parameter (p0340 = 4), this value is re-calculated.

p1592[0...n] Flux controller integral.action time / Flux controller Tn

SERVO	**Can be changed:** U, T		**Access level:** 3
	Data type: Floating Point	**Data set:** DDS	**Function diagram:** 5722
	P-Group: Closed-loop control	**Units group:** TIME_M3	**Unit selection:** -
	Min	**Max**	**Factory setting**
	0 [ms]	10000 [ms]	30 [ms]

Description: Sets the integral action time of the flux controller.

Note: For synchronous motors, this parameters has no effect.
The value is automatically pre-assigned dependent on the motor when the drive system is first commissioned.
When calculating controller parameter (p0340 = 4), this value is re-calculated.

r1593 Field weakening controller output / Field_ctrl output

VECTOR (n/M)	**Can be changed:** -		**Access level:** 4
	Data type: Floating Point	**Data set:** -	**Function diagram:** 6724
	P-Group: Closed-loop control	**Units group:** CURRENT_AC_EFF	**Unit selection:** -
	Min	**Max**	**Factory setting**
	- [Aeff]	- [Aeff]	- [Aeff]

Description: Displays the output of the field weakening controller.

© Siemens AG, 2005. All rights reserved

p1596[0...n] Field weakening controller integral-action time / Field_ctrl Tn

VECTOR (n/M)	**Can be changed:** U, T		**Access level:** 3
	Data type: Floating Point	**Data set:** DDS	**Function diagram:** 6723, 6724
	P-Group: Closed-loop control	**Units group:** TIME_M3	**Unit selection:** -
	Min	**Max**	**Factory setting**
	10 [ms]	10000 [ms]	50 [ms]

Description: Sets the integral-action time of the field-weakening controller.

r1597 Field weakening controller output / Field_ctrl output

VECTOR (n/M)	**Can be changed:** -		**Access level:** 4
	Data type: Floating Point	**Data set:** -	**Function diagram:** 6723
	P-Group: Closed-loop control	**Units group:** FLUX_RELATIVE	**Unit selection:** -
	Min	**Max**	**Factory setting**
	- [%]	- [%]	- [%]

Description: Displays the output of the field weakening controller. The value is referred to the rated motor flux.

r1598 CO: Total flux setpoint / Flux setpt total

VECTOR (n/M)	**Can be changed:** -		**Access level:** 3
	Data type: Floating Point	**Data set:** -	**Function diagram:** 6714, 6723
	P-Group: Closed-loop control	**Units group:** FLUX_RELATIVE	**Unit selection:** -
	Min	**Max**	**Factory setting**
	- [%]	- [%]	- [%]

Description: Displays the effective flux setpoint. The value is referred to the rated motor flux.

p1610[0...n] Torque setpoint static (SLVC) / M_set static

VECTOR (n/M)	**Can be changed:** U, T		**Access level:** 2
	Data type: Floating Point	**Data set:** DDS	**Function diagram:** -
	P-Group: Closed-loop control	**Units group:** PERCENT	**Unit selection:** -
	Min	**Max**	**Factory setting**
	0.0 [%]	200.0 [%]	50.0 [%]

Description: Sets the static torque setpoint for sensorless VECTOR control (SLVC). This parameter is entered as a percentage referred to the rated motor torque (r0333).
For sensorless closed-loop VECTOR control, when the motor model is shut down, an absolute current is impressed. p1610 represents the maximum load that occurs at a constant setpoint speed.

Notice: p1610 should always be set to at least 10 % higher than the maximum steady-state load that can occur.

Note: For p1610 = 0%, a current setpoint is calculated that corresponds to the no-load case (rated magnetizing current).
For p1610 = 100 %, a current setpoint is calculated that corresponds to the rated motor torque.

p1611[0...n] Supplementary accelerating torque (SLVC) / M_suppl_accel

VECTOR (n/M)	**Can be changed:** U, T		**Access level:** 2
	Data type: Floating Point	**Data set:** DDS	**Function diagram:** 6722
	P-Group: Closed-loop control	**Units group:** PERCENT	**Unit selection:** -
	Min	**Max**	**Factory setting**
	0.0 [%]	200.0 [%]	0.0 [%]

Description: Enters the dynamic torque setpoint for the low-speed range for sensorless VECTOR control (SLVC). This parameter is entered as a percentage referred to the rated motor torque (r0333).

© Siemens AG, 2005. All rights reserved

Note: When accelerating and braking p1611 is added to p1610 and the resulting total torque is converted into an appropriate current setpoint and controlled.
For pure accelerating torques, it is always favorable to use the torque pre-control of the speed controller (p1496).

p1612[0...n] Current setpoint, open-loop control, sensorless / I_setCtrSensorless

SERVO

Can be changed: U, T		**Access level:** 2
Data type: Floating Point	**Data set:** DDS	**Function diagram:** -
P-Group: Closed-loop control	**Units group:** CURRENT_AC_EFF	**Unit selection:** -
Min	**Max**	**Factory setting**
0.00 [Aeff]	500.00 [Aeff]	0.00 [Aeff]

Description: Sets the current setpoint for controlled (open-loop) sensorless operation.

p1616[0...n] Current setpoint smoothing time / I_set T_smooth

VECTOR (n/M)

Can be changed: U, T		**Access level:** 3
Data type: Floating Point	**Data set:** DDS	**Function diagram:** 6722
P-Group: Closed-loop control	**Units group:** TIME_M3	**Unit selection:** -
Min	**Max**	**Factory setting**
4 [ms]	10000 [ms]	40 [ms]

Description: Sets the smoothing time for the current setpoint.
The current setpoint is generated from p1610 and p1611.

Note: This parameter is only effective in the range where current is impressed for sensorless VECTOR control.

r1623 Field-generating current setpoint (steady-state) / Id_set stationary

VECTOR (n/M)

Can be changed: -		**Access level:** 4
Data type: Floating Point	**Data set:** -	**Function diagram:** 6723
P-Group: Displays, signals	**Units group:** CURRENT_AC_EFF	**Unit selection:** -
Min	**Max**	**Factory setting**
- [Aeff]	- [Aeff]	- [Aeff]

Description: Displays the steady-state field generating current setpoint (Id_set).

r1624 Field-generating current setpoint, total / Id_set total

VECTOR (n/M)

Can be changed: -		**Access level:** 4
Data type: Floating Point	**Data set:** -	**Function diagram:** 6640, 6723, 6724
P-Group: Displays, signals	**Units group:** CURRENT_AC_EFF	**Unit selection:** -
Min	**Max**	**Factory setting**
- [Aeff]	- [Aeff]	- [Aeff]

Description: Displays the limited field-generating current setpoint (Id_set).
This value comprises the steady-state field-generating current setpoint r1623 and a dynamic component that is only set when changes are made to the flux setpoint.

r1650 Current setpoint torque-generating before filter / Iq_set before filt

SERVO, VECTOR (n/M)

Can be changed: -		**Access level:** 3
Data type: Floating Point	**Data set:** -	**Function diagram:** 5710
P-Group: Closed-loop control	**Units group:** CURRENT_AC_EFF	**Unit selection:** -
Min	**Max**	**Factory setting**
- [Aeff]	- [Aeff]	- [Aeff]

Description: Displays the torque/force generating current setpoint Iqset after the torque/force limits and the clock cycle interpolation is front of the current setpoint filters.

© Siemens AG, 2005. All rights reserved

r1650 Current setpoint force-generating before filter / Iq_set before filt

SERVO (Lin)

Can be changed: -		**Access level:** 3
Data type: Floating Point	**Data set:** -	**Function diagram:** 5710
P-Group: Closed-loop control	**Units group:** CURRENT_AC_EFF	**Unit selection:** -
Min	**Max**	**Factory setting**
- [Aeff]	- [Aeff]	- [Aeff]

Description: Displays the torque/force generating current setpoint Iqset after the torque/force limits and the clock cycle interpolation is front of the current setpoint filters.

r1651 CO: Torque setpoint, function generator / M_set FG

SERVO, VECTOR (n/M)

Can be changed: -		**Access level:** 3
Data type: Floating Point	**Data set:** -	**Function diagram:** -
P-Group: Displays, signals	**Units group:** TORQUE	**Unit selection:** -
Min	**Max**	**Factory setting**
- [Nm]	- [Nm]	- [Nm]

Description: Displays the torque/force setpoint of the function generator.

r1651 CO: Force setpoint, function generator / M_set FG

SERVO (Lin)

Can be changed: -		**Access level:** 3
Data type: Floating Point	**Data set:** -	**Function diagram:** -
P-Group: Displays, signals	**Units group:** FORCE	**Unit selection:** -
Min	**Max**	**Factory setting**
- [N]	- [N]	- [N]

Description: Displays the torque/force setpoint of the function generator.

p1654[0...n] Current setpoint torque-generating smoothing time / Isq_set T_smooth

VECTOR (n/M)

Can be changed: U, T		**Access level:** 4
Data type: Floating Point	**Data set:** DDS	**Function diagram:** 6710
P-Group: Closed-loop control	**Units group:** TIME_M3	**Unit selection:** -
Min	**Max**	**Factory setting**
0.1 [ms]	20.0 [ms]	4.8 [ms]

Description: Sets the smoothing time constant for the setpoint of the torque-generating current components.
Note: The smoothing time does not become effective until the field-weakening range is reached.

p1655[0...1] CI: Current setpoint filter natural frequency tuning / I_set_filt f_n

VECTOR (n/M)

Can be changed: U, T		**Access level:** 3
Data type: Unsigned32	**Data set:** -	**Function diagram:** 6710
P-Group: Closed-loop control	**Units group:** -	**Unit selection:** -
Min	**Max**	**Factory setting**
-	-	1

Description: Sets the signal source for tuning the natural frequency of the current setpoint filter.
Index: [0] = Filter 1
[1] = Filter 2

© Siemens AG, 2005. All rights reserved

p1656[0...n] Activates current setpoint filter / I_set_filt active

SERVO

Can be changed: U, T | **Access level:** 3

Data type: Unsigned16 | **Data set:** DDS | **Function diagram:** 5710

P-Group: Closed-loop control | **Units group:** - | **Unit selection:** -

Min	Max	Factory setting
0000 hex	000F hex	0001 hex

Description: Activates current setpoint filters 1 to 4.

Bit field:

Bit	Signal name	0 signal	1 signal	FP
00	Filter 1	not active	active	-
01	Filter 2	not active	active	-
02	Filter 3	not active	active	-
03	Filter 4	not active	active	-

Dependency: The current setpoint filters are parameterized with p1656 to p1676.

Note: If not all of the filters are required, then the filters should be used consecutively starting from filter 1.

p1656[0...n] Activates current setpoint filter / I_set_filt active

VECTOR (n/M)

Can be changed: U, T | **Access level:** 3

Data type: Unsigned16 | **Data set:** DDS | **Function diagram:** 6710

P-Group: Closed-loop control | **Units group:** - | **Unit selection:** -

Min	Max	Factory setting
0000 hex	0003 hex	0001 hex

Description: Activates current setpoint filters 1 to 2.

Bit field:

Bit	Signal name	0 signal	1 signal	FP
00	Filter 1	not active	active	-
01	Filter 2	not active	active	-

Dependency: The current setpoint filters are parameterized with p1656 to p1666.

Note: If not all of the filters are required, then the filters should be used consecutively starting from filter 1.

p1657[0...n] Current setpoint filter 1 type / I_set_filt 1 Typ

SERVO, VECTOR (n/M)

Can be changed: U, T | **Access level:** 3

Data type: Integer16 | **Data set:** DDS | **Function diagram:** 5710, 6710

P-Group: Closed-loop control | **Units group:** - | **Unit selection:** -

Min	Max	Factory setting
0001 hex	0002 hex	0001 hex

Description: Sets the current setpoint filter 1 as low pass (PT2) or as extended general 2nd-order filter.

Values:
1: Low pass: PT2
2: General 2nd-order filter

Dependency: The current setpoint filters are parameterized with p1656 to p1676.

Note: For an extended general 2nd order filter, by inserting the same natural frequency in both the numerator and in the denominator, i.e. bandstop frequency, a bandstop filter is implemented. If the numerator damping of zero is selected, the bandstop frequency is completely suppressed. The numerator damping can be determined from the equation for the 3 dB bandwidth: f_3dB bandwidth = 2 * D_numerator * f_bandstop frequency.

© Siemens AG, 2005. All rights reserved

p1658[0...n] Current setpoint filter 1 denominator natural frequency / I_set_filt 1 fn_n

SERVO, VECTOR (n/M)	**Can be changed:** U, T		**Access level:** 3
	Data type: Floating Point	**Data set:** DDS	**Function diagram:** 5710, 6710
	P-Group: Closed-loop control	**Units group:** FREQUENCY	**Unit selection:** -
	Min	**Max**	**Factory setting**
	0.5 [Hz]	16000.0 [Hz]	1999.0 [Hz]

Description: Sets the denominator natural frequency for current setpoint filter 1 (PT2, general filter).
Dependency: The current setpoint filters are parameterized with p1656 to p1676.

p1659[0...n] Current setpoint filter 1 denominator damping / I_set_filt 1 D_n

SERVO, VECTOR (n/M)	**Can be changed:** U, T		**Access level:** 3
	Data type: Floating Point	**Data set:** DDS	**Function diagram:** 5710, 6710
	P-Group: Closed-loop control	**Units group:** -	**Unit selection:** -
	Min	**Max**	**Factory setting**
	0.001	10.000	0.700

Description: Sets the denominator damping for current setpoint filter 1.
Dependency: The current setpoint filters are parameterized with p1656 to p1676.

p1660[0...n] Current setpoint filter 1 numerator natural frequency / I_set_filt 1 fn_z

SERVO, VECTOR (n/M)	**Can be changed:** U, T		**Access level:** 3
	Data type: Floating Point	**Data set:** DDS	**Function diagram:** 5710, 6710
	P-Group: Closed-loop control	**Units group:** FREQUENCY	**Unit selection:** -
	Min	**Max**	**Factory setting**
	0.5 [Hz]	16000.0 [Hz]	1999.0 [Hz]

Description: Sets the numerator natural frequency for current setpoint filter 1 (general filter).
Dependency: The current setpoint filters are parameterized with p1656 to p1676.

p1661[0...n] Current setpoint filter 1 numerator damping / I_set_filt 1 D_z

SERVO, VECTOR (n/M)	**Can be changed:** U, T		**Access level:** 3
	Data type: Floating Point	**Data set:** DDS	**Function diagram:** 5710, 6710
	P-Group: Closed-loop control	**Units group:** -	**Unit selection:** -
	Min	**Max**	**Factory setting**
	0.000	10.000	0.700

Description: Sets the numerator damping for current setpoint filter 1.
Dependency: The current setpoint filters are parameterized with p1656 to p1676.

p1662[0...n] Current setpoint filter 2 type / I_set_filt 2 Typ

SERVO, VECTOR (n/M)	**Can be changed:** U, T		**Access level:** 3
	Data type: Integer16	**Data set:** DDS	**Function diagram:** 5710, 6710
	P-Group: Closed-loop control	**Units group:** -	**Unit selection:** -
	Min	**Max**	**Factory setting**
	0001 hex	0002 hex	0001 hex

Description: Sets the current setpoint filter 2 as low pass (PT2) or as extended general 2nd-order filter.
Values:
1: Low pass: PT2
2: General 2nd-order filter

© Siemens AG, 2005. All rights reserved

Dependency: The current setpoint filters are parameterized with p1656 to p1676.

Note: For an extended general 2nd order filter, by inserting the same natural frequency in both the numerator and in the denominator, i.e. bandstop frequency, a bandstop filter is implemented. If the numerator damping of zero is selected, the bandstop frequency is completely suppressed. The numerator damping can be determined from the equation for the 3 dB bandwidth: f_3dB bandwidth = 2 * D_numerator * f_bandstop frequency.

p1663[0...n] Current setpoint filter 2 denominator natural frequency / I_set_filt 2 fn_n

SERVO, VECTOR (n/M)

Can be changed: U, T — **Access level:** 3

Data type: Floating Point — **Data set:** DDS — **Function diagram:** 5710, 6710

P-Group: Closed-loop control — **Units group:** FREQUENCY — **Unit selection:** -

Min	Max	Factory setting
0.5 [Hz]	16000.0 [Hz]	1999.0 [Hz]

Description: Sets the denominator natural frequency for current setpoint filter 2 (PT2, general filter).

Dependency: The current setpoint filters are parameterized with p1656 to p1676.

p1664[0...n] Current setpoint filter 2 denominator damping / I_set_filt 2 D_n

SERVO, VECTOR (n/M)

Can be changed: U, T — **Access level:** 3

Data type: Floating Point — **Data set:** DDS — **Function diagram:** 5710, 6710

P-Group: Closed-loop control — **Units group:** - — **Unit selection:** -

Min	Max	Factory setting
0.001	10.000	0.700

Description: Sets the denominator damping for current setpoint filter 2.

Dependency: The current setpoint filters are parameterized with p1656 to p1676.

p1665[0...n] Current setpoint filter 2 numerator natural frequency / I_set_filt 2 fn_z

SERVO, VECTOR (n/M)

Can be changed: U, T — **Access level:** 3

Data type: Floating Point — **Data set:** DDS — **Function diagram:** 5710, 6710

P-Group: Closed-loop control — **Units group:** FREQUENCY — **Unit selection:** -

Min	Max	Factory setting
0.5 [Hz]	16000.0 [Hz]	1999.0 [Hz]

Description: Sets the numerator natural frequency for current setpoint filter 2 (general filter).

Dependency: The current setpoint filters are parameterized with p1656 to p1676.

p1666[0...n] Current setpoint filter 2 numerator damping / I_set_filt 2 D_z

SERVO, VECTOR (n/M)

Can be changed: U, T — **Access level:** 3

Data type: Floating Point — **Data set:** DDS — **Function diagram:** 5710, 6710

P-Group: Closed-loop control — **Units group:** - — **Unit selection:** -

Min	Max	Factory setting
0.000	10.000	0.700

Description: Sets the numerator damping for current setpoint filter 2.

Dependency: The current setpoint filters are parameterized with p1656 to p1676.

© Siemens AG, 2005. All rights reserved

p1667[0...n] Current setpoint filter 3 type / I_set_filt 3 Typ

SERVO	**Can be changed:** U, T		**Access level:** 3
	Data type: Integer16	**Data set:** DDS	**Function diagram:** 5710
	P-Group: Closed-loop control	**Units group:** -	**Unit selection:** -
	Min	**Max**	**Factory setting**
	0001 hex	0002 hex	0001 hex

Description: Sets the current setpoint filter 3 as low pass (PT2) or as extended general 2nd-order filter.

Values:
1: Low pass: PT2
2: General 2nd-order filter

Dependency: The current setpoint filters are parameterized with p1656 to p1676.

p1668[0...n] Current setpoint filter 3 denominator natural frequency / I_set_filt 3 fn_n

SERVO	**Can be changed:** U, T		**Access level:** 3
	Data type: Floating Point	**Data set:** DDS	**Function diagram:** 5710
	P-Group: Closed-loop control	**Units group:** FREQUENCY	**Unit selection:** -
	Min	**Max**	**Factory setting**
	0.5 [Hz]	16000.0 [Hz]	1999.0 [Hz]

Description: Sets the denominator natural frequency for current setpoint filter 3 (PT2, general filter).

Dependency: The current setpoint filters are parameterized with p1656 to p1676.

p1669[0...n] Current setpoint filter 3 denominator damping / I_set_filt 3 D_n

SERVO	**Can be changed:** U, T		**Access level:** 3
	Data type: Floating Point	**Data set:** DDS	**Function diagram:** 5710
	P-Group: Closed-loop control	**Units group:** -	**Unit selection:** -
	Min	**Max**	**Factory setting**
	0.001	10.000	0.700

Description: Sets the denominator damping for current setpoint filter 3.

Dependency: The current setpoint filters are parameterized with p1656 to p1676.

p1670[0...n] Current setpoint filter 3 numerator natural frequency / I_set_filt 3 fn_z

SERVO	**Can be changed:** U, T		**Access level:** 3
	Data type: Floating Point	**Data set:** DDS	**Function diagram:** 5710
	P-Group: Closed-loop control	**Units group:** FREQUENCY	**Unit selection:** -
	Min	**Max**	**Factory setting**
	0.5 [Hz]	16000.0 [Hz]	1999.0 [Hz]

Description: Sets the numerator natural frequency for current setpoint filter 3 (general filter).

Dependency: The current setpoint filters are parameterized with p1656 to p1676.

p1671[0...n] Current setpoint filter 3 numerator damping / I_set_filt 3 D_z

SERVO	**Can be changed:** U, T		**Access level:** 3
	Data type: Floating Point	**Data set:** DDS	**Function diagram:** 5710
	P-Group: Closed-loop control	**Units group:** -	**Unit selection:** -
	Min	**Max**	**Factory setting**
	0.000	10.000	0.700

Description: Sets the numerator damping for current setpoint filter 3.

Dependency: The current setpoint filters are parameterized with p1656 to p1676.

© Siemens AG, 2005. All rights reserved

p1672[0...n] Current setpoint filter 4 type / I_set_filt 4 Typ

SERVO

Can be changed: U, T		**Access level:** 3
Data type: Integer16	**Data set:** DDS	**Function diagram:** 5710
P-Group: Closed-loop control	**Units group:** -	**Unit selection:** -
Min	**Max**	**Factory setting**
0001 hex	0002 hex	0001 hex

Description: Sets the current setpoint filter 4 as low pass (PT2) or as extended general 2nd-order filter.

Values:
1: Low pass: PT2
2: General 2nd-order filter

Dependency: The current setpoint filters are parameterized with p1656 to p1676.

p1673[0...n] Current setpoint filter 4 denominator natural frequency / I_set_filt 4 fn_n

SERVO

Can be changed: U, T		**Access level:** 3
Data type: Floating Point	**Data set:** DDS	**Function diagram:** 5710
P-Group: Closed-loop control	**Units group:** FREQUENCY	**Unit selection:** -
Min	**Max**	**Factory setting**
0.5 [Hz]	16000.0 [Hz]	1999.0 [Hz]

Description: Sets the denominator natural frequency for current setpoint filter 4 (PT2, general filter).

Dependency: The current setpoint filters are parameterized with p1656 to p1676.

p1674[0...n] Current setpoint filter 4 denominator damping / I_set_filt 4 D_n

SERVO

Can be changed: U, T		**Access level:** 3
Data type: Floating Point	**Data set:** DDS	**Function diagram:** 5710
P-Group: Closed-loop control	**Units group:** -	**Unit selection:** -
Min	**Max**	**Factory setting**
0.001	10.000	0.700

Description: Sets the denominator damping for current setpoint filter 4.

Dependency: The current setpoint filters are parameterized with p1656 to p1676.

p1675[0...n] Current setpoint filter 4 numerator natural frequency / I_set_filt 4 fn_n

SERVO

Can be changed: U, T		**Access level:** 3
Data type: Floating Point	**Data set:** DDS	**Function diagram:** 5710
P-Group: Closed-loop control	**Units group:** FREQUENCY	**Unit selection:** -
Min	**Max**	**Factory setting**
0.5 [Hz]	16000.0 [Hz]	1999.0 [Hz]

Description: Sets the numerator natural frequency for current setpoint filter 4 (general filter).

Dependency: The current setpoint filters are parameterized with p1656 to p1676.

p1676[0...n] Current setpoint filter 4 numerator damping / I_set_filt 4 D_z

SERVO

Can be changed: U, T		**Access level:** 3
Data type: Floating Point	**Data set:** DDS	**Function diagram:** 5710
P-Group: Closed-loop control	**Units group:** -	**Unit selection:** -
Min	**Max**	**Factory setting**
0.000	10.000	0.700

Description: Sets the numerator damping for current setpoint filter 4.

Dependency: The current setpoint filters are parameterized with p1656 to p1676.

© Siemens AG, 2005. All rights reserved

p1699 Filter data transfer / Filt data transfer

SERVO, VECTOR (n/M)	**Can be changed:** U, T		**Access level:** 3
	Data type: Integer16	**Data set:** -	**Function diagram:** -
	P-Group: Closed-loop control	**Units group:** -	**Unit selection:** -
	Min	**Max**	**Factory setting**
	0	1	0

Description: Activates data transfer for parameter changes for the filter.
p1699 = 0:
The new filter data are immediately transferred.
p1699 = 1:
The new filter data are only transferred when this parameter is reset.

Dependency: Refer to: p1414, p1415, p1416, p1417, p1418, p1419, p1420, p1421, p1422, p1423, p1424, p1425, p1426, p1656, p1657, p1658, p1659, p1660, p1661, p1662, p1663, p1664, p1665, p1666, p1667, p1668, p1669, p1670, p1671, p1672, p1673, p1674, p1675, p1676

p1701[0...n] Current controller reference model deadtime / I_ctrRefMod t_dead

SERVO	**Can be changed:** U, T		**Access level:** 3
	Data type: Floating Point	**Data set:** DDS	**Function diagram:** 5714
	P-Group: Closed-loop control	**Units group:** -	**Unit selection:** -
	Min	**Max**	**Factory setting**
	0.0	1.0	1.0

Description: Sets the fractional deadtime for the current controller reference model.
This parameter emulates the computation deadtime of the proportionally controlled current control loop.

Note: Deadtime = p1701 * p0115[0]

p1703[0...n] Isq current controller pre-control scaling / Isq_ctr_prectrScal

VECTOR (n/M)	**Can be changed:** U, T		**Access level:** 4
	Data type: Floating Point	**Data set:** DDS	**Function diagram:** -
	P-Group: Closed-loop control	**Units group:** PERCENT	**Unit selection:** -
	Min	**Max**	**Factory setting**
	0.0 [%]	200.0 [%]	70.0 [%]

Description: Sets the scaling of the dynamic current controller pre-control for the torque/force-generating current component Isq.

p1715[0...n] Current controller P gain / I_ctrl Kp

SERVO	**Can be changed:** U, T		**Access level:** 3
	Data type: Floating Point	**Data set:** DDS	**Function diagram:** 5714, 6714
	P-Group: Closed-loop control	**Units group:** GAIN_CURRENT_CTRL	**Unit selection:** p0528
	Min	**Max**	**Factory setting**
	0.000 [V/A]	100000.000 [V/A]	0.000 [V/A]

Description: Sets the proportional gain of the current controller for the lower adaptation current range. This value is automatically preset using p3900 or p0340 when commissioning has been completed.

Dependency: p0391, p0392 and p0393 are only available for SERVO.
Refer to: p0391, p0392, p0393

Note: For p0393 = 100 %, the current controller adaptation is disabled and p1715 is effective over the entire range.

© Siemens AG, 2005. All rights reserved

p1715[0...n] Current controller P gain / I_ctrl Kp

VECTOR (n/M)	**Can be changed:** U, T		**Access level:** 3
	Data type: Floating Point	**Data set:** DDS	**Function diagram:** 5714, 6714
	P-Group: Closed-loop control	**Units group:** -	**Unit selection:** p0528
	Min	**Max**	**Factory setting**
	0.000	100000.000	0.000

Description: Sets the proportional gain of the current controller for the lower adaptation current range. This value is automatically preset using p3900 or p0340 when commissioning has been completed.

Dependency: p0391, p0392 and p0393 are only available for SERVO.
Refer to: p0391, p0392, p0393

Note: For p0393 = 100 %, the current controller adaptation is disabled and p1715 is effective over the entire range.

p1717[0...n] Current controller integral-action time / I_ctrl Tn

SERVO, VECTOR (n/M)	**Can be changed:** U, T		**Access level:** 3
	Data type: Floating Point	**Data set:** DDS	**Function diagram:** 5714, 6714
	P-Group: Closed-loop control	**Units group:** TIME_M3	**Unit selection:** -
	Min	**Max**	**Factory setting**
	0.00 [ms]	1000.00 [ms]	2.00 [ms]

Description: Sets the integral-action time of the current controller.

Dependency: Refer to: p1715

r1718 CO: Isq controller output / Isq_ctrl outp

VECTOR (n/M)	**Can be changed:** -		**Access level:** 4
	Data type: Floating Point	**Data set:** -	**Function diagram:** 6714
	P-Group: Closed-loop control	**Units group:** VOLTAGE_AC_EFF	**Unit selection:** -
	Min	**Max**	**Factory setting**
	- [Veff]	- [Veff]	- [Veff]

Description: Displays the actual output of the Isq current controller (torque/force generating current, PI controller). The value contains the proportional and integral components of the PI controller.

r1719 Isq controller integral component / Isq_ctrl I_comp

VECTOR (n/M)	**Can be changed:** -		**Access level:** 4
	Data type: Floating Point	**Data set:** -	**Function diagram:** -
	P-Group: Closed-loop control	**Units group:** VOLTAGE_AC_EFF	**Unit selection:** -
	Min	**Max**	**Factory setting**
	- [Veff]	- [Veff]	- [Veff]

Description: Displays the integral component of the Isq current controller (torque/force-generating current, PI controller).

r1723 CO: Isd controller output / Isd_ctrl output

VECTOR (n/M)	**Can be changed:** -		**Access level:** 4
	Data type: Floating Point	**Data set:** -	**Function diagram:** 6714
	P-Group: Closed-loop control	**Units group:** VOLTAGE_AC_EFF	**Unit selection:** -
	Min	**Max**	**Factory setting**
	- [Veff]	- [Veff]	- [Veff]

Description: Displays the actual output of the Isd current controller (flux-generating current, PI controller). The value contains the proportional and integral components of the PI controller.

© Siemens AG, 2005. All rights reserved

r1724 **Isd controller integral component / Isd_ctrl I_comp**

VECTOR (n/M)	**Can be changed:** -		**Access level:** 4
	Data type: Floating Point	**Data set:** -	**Function diagram:** -
	P-Group: Closed-loop control	**Units group:** VOLTAGE_AC_EFF	**Unit selection:** -
	Min	**Max**	**Factory setting**
	- [Veff]	- [Veff]	- [Veff]

Description: Displays the integral component of the Isd current controller (flux-generating current, PI controller).

r1725 **Isd controller integral component limit / Isd_ctrl I_limit**

VECTOR (n/M)	**Can be changed:** -		**Access level:** 4
	Data type: Floating Point	**Data set:** -	**Function diagram:** -
	P-Group: Closed-loop control	**Units group:** VOLTAGE_AC_EFF	**Unit selection:** -
	Min	**Max**	**Factory setting**
	- [Veff]	- [Veff]	- [Veff]

Description: Displays the limit value for the integral component of the Isd current controller.

p1726[0...n] **Quadrature arm decoupling, scaling / Transv_decpl scal**

VECTOR (n/M)	**Can be changed:** U, T		**Access level:** 4
	Data type: Floating Point	**Data set:** DDS	**Function diagram:** -
	P-Group: Closed-loop control	**Units group:** PERCENT	**Unit selection:** -
	Min	**Max**	**Factory setting**
	0.0 [%]	200.0 [%]	75.0 [%]

Description: Sets the scaling of the quadrature arm decoupling
Note: This parameter is ineffective for sensorless VECTOR control. In this case, p1727 is always used.

p1727[0...n] **Quadrature arm decoupling at voltage limit, scaling / TrnsvDecplVmaxScal**

VECTOR (n/M)	**Can be changed:** U, T		**Access level:** 4
	Data type: Floating Point	**Data set:** DDS	**Function diagram:** -
	P-Group: Closed-loop control	**Units group:** PERCENT	**Unit selection:** -
	Min	**Max**	**Factory setting**
	0.0 [%]	200.0 [%]	50.0 [%]

Description: Sets the scaling of quadrature arm decoupling when the voltage limit is reached.

r1728 **De-coupling voltage, in-line axis / U_dir-axis_decoupl**

VECTOR (n/M)	**Can be changed:** -		**Access level:** 3
	Data type: Floating Point	**Data set:** -	**Function diagram:** -
	P-Group: Closed-loop control	**Units group:** VOLTAGE_AC_EFF	**Unit selection:** -
	Min	**Max**	**Factory setting**
	- [Veff]	- [Veff]	- [Veff]

Description: Displays the actual output of the quadrature channel de-coupling for the d axis.

r1729 **De-coupling voltage, quadrature axis / U_quad_decoupl**

VECTOR (n/M)	**Can be changed:** -		**Access level:** 3
	Data type: Floating Point	**Data set:** -	**Function diagram:** -
	P-Group: Closed-loop control	**Units group:** VOLTAGE_AC_EFF	**Unit selection:** -
	Min	**Max**	**Factory setting**
	- [Veff]	- [Veff]	- [Veff]

Description: Displays the actual output of the quadrature channel de-coupling for the q axis.

© Siemens AG, 2005. All rights reserved

r1732 Direct-axis voltage setpoint / U_direct-axis_set

SERVO, VECTOR (n/M)

Can be changed: -		**Access level:** 3
Data type: Floating Point	**Data set:** -	**Function diagram:** 1630, 5714, 6714, 5718
P-Group: Closed-loop control	**Units group:** VOLTAGE_AC_EFF	**Unit selection:** -
Min	**Max**	**Factory setting**
- [Veff]	- [Veff]	- [Veff]

Description: Displays the direct-axis voltage setpoint Ud.

r1733 Quadrature-axis voltage setpoint / U_quad_set

SERVO, VECTOR (n/M)

Can be changed: -		**Access level:** 3
Data type: Floating Point	**Data set:** -	**Function diagram:** 1630, 5714, 5718, 6714, 6719
P-Group: Closed-loop control	**Units group:** VOLTAGE_AC_EFF	**Unit selection:** -
Min	**Max**	**Factory setting**
- [Veff]	- [Veff]	- [Veff]

Description: Displays the quadrature-axis component of voltage setpoint Uq.

p1740[0...n] Gain resonance damping for sensorless closed loop control / Gain res_damp

VECTOR (n/M)

Can be changed: U, T		**Access level:** 3
Data type: Floating Point	**Data set:** DDS	**Function diagram:** -
P-Group: Closed-loop control	**Units group:** -	**Unit selection:** -
Min	**Max**	**Factory setting**
0.000	10.000	0.025

Description: Defines the gain of the controller for resonance damping for operation with sensorless VECTOR control in the range that current is impressed.

p1744[0...n] Motor model speed threshold stall detection / MotMod n_thr stall

VECTOR (n/M)

Can be changed: U, T		**Access level:** 3
Data type: Floating Point	**Data set:** DDS	**Function diagram:** -
P-Group: Closed-loop control	**Units group:** SPEED_ROT	**Unit selection:** -
Min	**Max**	**Factory setting**
0.00 [1/min]	210000.00 [1/min]	100.00 [1/min]

Description: Sets the speed threshold value to detect a stalled motor.
If the adaptation controller output exceeds the parameterized speed difference, then bit 11 in status word p1408 is set.

Dependency: If a stalled drive is detected (p1408.11 set), fault 7902 is output after the delay time in p2178.
Refer to: p2178

Note: Speed monitoring is only effective in operation with a speed encoder (refer to p1300).

© Siemens AG, 2005. All rights reserved

p1745[0...n] Motor model error threshold stall detection / MotMod ThreshStall

VECTOR (n/M)	**Can be changed:** U, T		**Access level:** 3
	Data type: Floating Point	**Data set:** DDS	**Function diagram:** -
	P-Group: Closed-loop control	**Units group:** PERCENT	**Unit selection:** -
	Min	**Max**	**Factory setting**
	0.0 [%]	1000.0 [%]	5.0 [%]

Description: Sets the fault threshold in order to detect a motor that has stalled.
If the error signal (r1746) exceeds the parameterized error threshold, then bit 12 in status word p1408 is set.

Dependency: If a stalled drive is detected (p1408.12 set), fault 7902 is output after the delay time set in p2178.
Refer to: p2178

Note: Monitoring is only effective in the low-speed range (below p1755 * p1756).

r1746 Motor model error signal stall detection / MotMod sig stall

VECTOR (n/M)	**Can be changed:** -		**Access level:** 3
	Data type: Floating Point	**Data set:** -	**Function diagram:** -
	P-Group: Closed-loop control	**Units group:** PERCENT	**Unit selection:** -
	Min	**Max**	**Factory setting**
	- [%]	- [%]	- [%]

Description: Signal to initiate stall detection

Note: The signal is not calculated while magnetizing and only in the low speed range (below p1755 * p1756).

p1750[0...n] Motor model configuration / MotMod config

VECTOR (n/M)	**Can be changed:** U, T		**Access level:** 3
	Data type: Unsigned8	**Data set:** DDS	**Function diagram:** -
	P-Group: Closed-loop control	**Units group:** -	**Unit selection:** -
	Min	**Max**	**Factory setting**
	0000 bin	0111 bin	0000 bin

Description: Sets the configuration of the motor model.

Bit field:

Bit	Signal name	0 signal	1 signal	FP
00	Controlled start	No	Yes	-
01	Controlled through 0 Hz	No	Yes	-
02	Set motor model	No	Yes	-

r1751 Motor model status / MotMod status

VECTOR (n/M)	**Can be changed:** -		**Access level:** 3
	Data type: Unsigned16	**Data set:** -	**Function diagram:** -
	P-Group: Closed-loop control	**Units group:** -	**Unit selection:** -
	Min	**Max**	**Factory setting**
	-	-	-

Description: Displays the status of the motor model.

Bit field:

Bit	Signal name	0 signal	1 signal	FP
00	Controlled operation	not active	active	-
01	Set ramp-function generator	not active	active	-
02	Stop RsLh adaptation	No	Yes	-
03	Feedback	not active	active	-
04	Encoder operation	not active	active	-
05	Holding angle	No	Yes	-
06	Acceleration criteria	not active	active	-
12	Rs adapt waits	No	Yes	-
13	Motor operation	No	Yes	-
14	Stator frequency sign	Negative	Positive	-
15	Torque sign	Regenerative mode	Motor mode	-

© Siemens AG, 2005. All rights reserved

p1752[0...n] Motor model changeover speed operation with encoder / MotMod n_chgov enc

SERVO, VECTOR	**Can be changed:** U, T		**Access level:** 3
	Data type: Floating Point	**Data set:** DDS	**Function diagram:** -
	P-Group: Closed-loop control	**Units group:** SPEED_ROT	**Unit selection:** -
	Min	**Max**	**Factory setting**
	0.0 [1/min]	210000.0 [1/min]	210000.0 [1/min]

Description: Sets the speed/velocity to change over the motor model for operation with encoder.
Dependency: Refer to: p1756

p1752[0...n] Motor model with encoder changeover velocity / MotMod n_chgov enc

SERVO (Lin)	**Can be changed:** U, T		**Access level:** 3
	Data type: Floating Point	**Data set:** DDS	**Function diagram:** -
	P-Group: Closed-loop control	**Units group:** SPEED_LIN_METRIC_P3	**Unit selection:** -
	Min	**Max**	**Factory setting**
	0.0 [m/min]	1000.0 [m/min]	1000.0 [m/min]

Description: Sets the speed/velocity to change over the motor model for operation with encoder.
Dependency: Refer to: p1756

p1755[0...n] Motor model changeover speed sensorless operation / MotMod n_chgSnsorl

SERVO, VECTOR	**Can be changed:** U, T		**Access level:** 3
	Data type: Floating Point	**Data set:** DDS	**Function diagram:** -
	P-Group: Closed-loop control	**Units group:** SPEED_ROT	**Unit selection:** -
	Min	**Max**	**Factory setting**
	0.0 [1/min]	210000.0 [1/min]	210000.0 [1/min]

Description: Sets the speed/velocity to change over the motor model to sensorless operation (without encoder).
Dependency: Refer to: p1756
Note: The changeover speed applies for the changeover between open-loop and closed-loop control mode.

p1755[0...n] Motor model changeover velocity sensorless operation / MotMod n_chgSnsorl

SERVO (Lin)	**Can be changed:** U, T		**Access level:** 3
	Data type: Floating Point	**Data set:** DDS	**Function diagram:** -
	P-Group: Closed-loop control	**Units group:** SPEED_LIN_METRIC_P3	**Unit selection:** -
	Min	**Max**	**Factory setting**
	0.0 [m/min]	1000.0 [m/min]	1000.0 [m/min]

Description: Sets the speed/velocity to change over the motor model to sensorless operation (without encoder).
Dependency: Refer to: p1756
Note: The changeover speed applies for the changeover between open-loop and closed-loop control mode.

p1756 Motor model changeover speed hysteresis / MotMod n_chgov.Hys

SERVO, VECTOR	**Can be changed:** U, T		**Access level:** 3
	Data type: Floating Point	**Data set:** -	**Function diagram:** -
	P-Group: Closed-loop control	**Units group:** PERCENT	**Unit selection:** -
	Min	**Max**	**Factory setting**
	0.0 [%]	90.0 [%]	5.0 [%]

Description: Sets the hysteresis for the changeover speed/velocity of the motor model.
Dependency: Refer to: p1752, p1755
Note: The value is entered relative to p1404, p1752 or p1755.

© Siemens AG, 2005. All rights reserved

p1758[0...n] Motor model changeover delay time, closed/open-loop control / MotMod t cl_op

VECTOR (n/M)	**Can be changed:** U, T		**Access level:** 3
	Data type: Floating Point	**Data set:** DDS	**Function diagram:** -
	P-Group: Closed-loop control	**Units group:** TIME_M3	**Unit selection:** -
	Min	**Max**	**Factory setting**
	100 [ms]	2000 [ms]	1000 [ms]

Description: Sets the minimum time for falling below the changeover speed/velocity when changing from closed-loop controlled operation to open-loop controlled operation.

Dependency: Refer to: p1755, p1756

p1759[0...n] Motor model changeover delay time open/closed loop control / MotMod t op_cl

VECTOR (n/M)	**Can be changed:** U, T		**Access level:** 3
	Data type: Floating Point	**Data set:** DDS	**Function diagram:** -
	P-Group: Closed-loop control	**Units group:** TIME_M3	**Unit selection:** -
	Min	**Max**	**Factory setting**
	0 [ms]	2000 [ms]	0 [ms]

Description: Sets the minimum time for exceeding the changeover speed/velocity when changing from open-loop controlled operation to closed-loop controlled operation.

Dependency: Refer to: p1755, p1756

p1760[0...n] Motor model with encoder speed adaptation Kp / MotMod wE n_ada Kp

VECTOR (n/M)	**Can be changed:** U, T		**Access level:** 3
	Data type: Floating Point	**Data set:** DDS	**Function diagram:** -
	P-Group: Closed-loop control	**Units group:** -	**Unit selection:** p0528
	Min	**Max**	**Factory setting**
	0.000	100000.000	1000.000

Description: Sets the proportional gain of the controller for speed adaptation with encoder

p1761[0...n] Motor model with encoder speed adaptation Tn / MotMod wE n_ada Tn

VECTOR (n/M)	**Can be changed:** U, T		**Access level:** 3
	Data type: Floating Point	**Data set:** DDS	**Function diagram:** -
	P-Group: Closed-loop control	**Units group:** TIME_M3	**Unit selection:** -
	Min	**Max**	**Factory setting**
	0 [ms]	1000 [ms]	4 [ms]

Description: Sets the integral-action time of the controller for speed adaptation with encoder

r1762 Motor model deviation, imaginary / MotMod dev imag

VECTOR (n/M)	**Can be changed:** -		**Access level:** 4
	Data type: Floating Point	**Data set:** -	**Function diagram:** -
	P-Group: Closed-loop control	**Units group:** -	**Unit selection:** -
	Min	**Max**	**Factory setting**
	-	-	-

Description: Displays the imaginary part of the complex projection of the differential current VECTOR (measured minus estimated) on the estimated flux VECTOR.

© Siemens AG, 2005. All rights reserved

r1763 **Motor model deviation real / MotMod dev real**

VECTOR (n/M)	**Can be changed:** -		**Access level:** 4
	Data type: Floating Point	**Data set:** -	**Function diagram:** -
	P-Group: Closed-loop control	**Units group:** -	**Unit selection:** -
	Min	**Max**	**Factory setting**
	-	-	-

Description: Displays the real part of the complex projection of the differential current pointer (measured minus estimated) on the estimated flow pointer.

p1764[0...n] **Motor model without encoder speed adaptation Kp / MotMod woE n_adaKp**

VECTOR (n/M)	**Can be changed:** U, T		**Access level:** 3
	Data type: Floating Point	**Data set:** DDS	**Function diagram:** 6730
	P-Group: Closed-loop control	**Units group:** -	**Unit selection:** p0528
	Min	**Max**	**Factory setting**
	0.000	100000.000	1000.000

Description: Sets the proportional gain of the controller for speed adaptation without encoder.

r1765 **Motor model, speed adaptation Kp effective / MotM n_ada Kp act**

VECTOR (n/M)	**Can be changed:** -		**Access level:** 4
	Data type: Floating Point	**Data set:** -	**Function diagram:** -
	P-Group: Closed-loop control	**Units group:** -	**Unit selection:** -
	Min	**Max**	**Factory setting**
	-	-	-

Description: Displays the effective proportional gain of the controller for the speed adaptation.

p1767[0...n] **Motor model without encoder speed adaptation Tn / MotMod woE n_adaTn**

VECTOR (n/M)	**Can be changed:** U, T		**Access level:** 3
	Data type: Floating Point	**Data set:** DDS	**Function diagram:** 6730
	P-Group: Closed-loop control	**Units group:** TIME_M3	**Unit selection:** -
	Min	**Max**	**Factory setting**
	1 [ms]	200 [ms]	4 [ms]

Description: Sets the integral action time of the controller for speed adaptation without encoder

r1768 **Motor model, speed adaptation Vi effective / MotM n_ada Vi act**

VECTOR (n/M)	**Can be changed:** -		**Access level:** 4
	Data type: Floating Point	**Data set:** -	**Function diagram:** -
	P-Group: Closed-loop control	**Units group:** -	**Unit selection:** -
	Min	**Max**	**Factory setting**
	-	-	-

Description: Displays the effective gain of the integral component of the controller for speed adaptation.

r1770 **Motor model speed adaptation proportional component / MotMod n_adapt Kp**

VECTOR (n/M)	**Can be changed:** -		**Access level:** 3
	Data type: Floating Point	**Data set:** -	**Function diagram:** 6730
	P-Group: Closed-loop control	**Units group:** SPEED_ROT	**Unit selection:** -
	Min	**Max**	**Factory setting**
	- [1/min]	- [1/min]	- [1/min]

Description: Displays the P component of the controller for speed adaptation.

© Siemens AG, 2005. All rights reserved

r1771 Motor model speed adaptation I comp. / MotMod n_adapt Tn

VECTOR (n/M)	**Can be changed:** -		**Access level:** 3
	Data type: Floating Point	**Data set:** -	**Function diagram:** 6730
	P-Group: Closed-loop control	**Units group:** SPEED_ROT	**Unit selection:** -
	Min	**Max**	**Factory setting**
	- [1/min]	- [1/min]	- [1/min]

Description: Displays the I component of the controller for speed adaptation.

p1774[0...n] Motor model, offset voltage compensation / MotMod woE n_adaTn

VECTOR (n/M)	**Can be changed:** U, T		**Access level:** 4
	Data type: Floating Point	**Data set:** DDS	**Function diagram:** -
	P-Group: Closed-loop control	**Units group:** VOLTAGE_AC_PP	**Unit selection:** -
	Min	**Max**	**Factory setting**
	-5.000 [V]	5.000 [V]	0.000 [V]

Description: Sets the offset voltage in the alpha direction; this compensates the offset voltages of the drive converter/inverter at low speeds. The value is valid for the rated (nominal) pulse frequency of the Motor Module.

Note: The value is pre-set during the rotating measurement.

p1775[0...n] Motor model, offset voltage compensation / MotMod woE n_adaTn

VECTOR (n/M)	**Can be changed:** U, T		**Access level:** 4
	Data type: Floating Point	**Data set:** DDS	**Function diagram:** -
	P-Group: Closed-loop control	**Units group:** VOLTAGE_AC_PP	**Unit selection:** -
	Min	**Max**	**Factory setting**
	-5.000 [V]	5.000 [V]	0.000 [V]

Description: Sets the offset voltage in the beta direction; this compensates the offset voltages of the drive converter/inverter at low speeds. The value is valid for the rated (nominal) pulse frequency of the Motor Module.

Note: The value is pre-set during the rotating measurement.

r1778 Motor model flux angle difference / MotMod ang. diff.

SERVO, VECTOR (n/M)	**Can be changed:** -		**Access level:** 4
	Data type: Floating Point	**Data set:** -	**Function diagram:** -
	P-Group: Closed-loop control	**Units group:** ANGLE	**Unit selection:** -
	Min	**Max**	**Factory setting**
	- [°]	- [°]	- [°]

Description: Displays the difference between the motor model flux angle and the transformation angle.

r1779 Motor model absolute flux / MotMod abs flux

VECTOR (n/M)	**Can be changed:** -		**Access level:** 3
	Data type: Floating Point	**Data set:** -	**Function diagram:** -
	P-Group: Closed-loop control	**Units group:** PERCENT	**Unit selection:** -
	Min	**Max**	**Factory setting**
	- [%]	- [%]	- [%]

Description: Displays the absolute value of the flux of the motor model.

© Siemens AG, 2005. All rights reserved

p1780[0...n] Motor model configuration adaptation / MotMod config adap

SERVO, VECTOR

Can be changed: U, T | **Access level:** 3
Data type: Unsigned8 | **Data set:** DDS | **Function diagram:** -
P-Group: Closed-loop control | **Units group:** - | **Unit selection:** -

Min	Max	Factory setting
0000 bin	0011 1110 bin	0011 1100 bin

Description: Sets the configuration for the adaptation circuit of the motor model:
Induction motor: Rs, Rr (only for operation with encoder), Lh and offset compensation.
Permanent-magnet synchronous motor: kT

Bit field:

Bit	Signal name	0 signal	1 signal	FP
01	Select motor model IM Rs adaptation	No	Yes	-
02	Select motor model IM Lh adaptation	No	Yes	-
03	Select motor model PESM KT adaptation	No	Yes	-
04	Select motor model, offset adaptation	No	Yes	-
05	Select IM Rr adaptation (only for operation with encoder)	No	Yes	-

p1781[0...n] Motor model IM Rs adaptation integral action time / MotMod Rs Tn

VECTOR (n/M)

Can be changed: U, T | **Access level:** 3
Data type: Floating Point | **Data set:** DDS | **Function diagram:** -
P-Group: Closed-loop control | **Units group:** TIME_M3 | **Unit selection:** p0528

Min	Max	Factory setting
10 [ms]	10000 [ms]	100 [ms]

Description: Sets the integral action time for the Rs adaptation of the motor model of the induction motor.

r1782 Motor model IM Rs adaptation correction value / MotMod Rs corr

VECTOR (n/M)

Can be changed: - | **Access level:** 3
Data type: Floating Point | **Data set:** - | **Function diagram:** -
P-Group: Closed-loop control | **Units group:** RESISTANCE | **Unit selection:** -

Min	Max	Factory setting
- [Ohm]	- [Ohm]	- [Ohm]

Description: Displays the correction value for the Rs adaptation of the motor model for the induction motor.

p1783[0...n] Motor model IM Rs adaptation Kp / MotMod Rs Kp

VECTOR (n/M)

Can be changed: U, T | **Access level:** 3
Data type: Floating Point | **Data set:** DDS | **Function diagram:** -
P-Group: Closed-loop control | **Units group:** - | **Unit selection:** -

Min	Max	Factory setting
0.000	1.000	0.100

Description: Sets the proportional gain for the Rs adaptation of the motor model of the induction motor.

p1785[0...n] Motor model IM Lh adaptation Kp / MotMod Lh Kp

VECTOR (n/M)

Can be changed: U, T | **Access level:** 3
Data type: Floating Point | **Data set:** DDS | **Function diagram:** -
P-Group: Closed-loop control | **Units group:** - | **Unit selection:** -

Min	Max	Factory setting
0.000	1.000	0.100

Description: Sets the proportional gain for the Lh adaptation of the motor model of the induction motor.

© Siemens AG, 2005. All rights reserved

p1786[0...n] Motor model IM Lh adaptation integral action time / MotMod Lh Tn

VECTOR (n/M)	**Can be changed:** U, T		**Access level:** 3
	Data type: Floating Point	**Data set:** DDS	**Function diagram:** -
	P-Group: Closed-loop control	**Units group:** TIME_M3	**Unit selection:** p0528
	Min	**Max**	**Factory setting**
	10 [ms]	10000 [ms]	100 [ms]

Description: Sets the integral action time for the Lh adaptation of the motor model of the induction motor.

r1787 Motor model IM Lh adaptation correction value / MotMod Lh corr

VECTOR (n/M)	**Can be changed:** -		**Access level:** 3
	Data type: Floating Point	**Data set:** -	**Function diagram:** -
	P-Group: Closed-loop control	**Units group:** INDUCTANCE_M3	**Unit selection:** -
	Min	**Max**	**Factory setting**
	- [mH]	- [mH]	- [mH]

Description: Displays the correction value for the Lh adaptation of the motor model for the induction motor.

r1789 Motor model IM Rs adaptation switch-on frequency / MotMod Rs f_on

VECTOR (n/M)	**Can be changed:** -		**Access level:** 4
	Data type: Floating Point	**Data set:** -	**Function diagram:** -
	P-Group: Closed-loop control	**Units group:** FREQUENCY	**Unit selection:** -
	Min	**Max**	**Factory setting**
	- [Hz]	- [Hz]	- [Hz]

Description: Displays the power-on stator frequency for the Rs adaptation of the induction motor.

r1790 Motor model IM Rs adaptation switch-on slip / MotMod Rs fslip

VECTOR (n/M)	**Can be changed:** -		**Access level:** 4
	Data type: Floating Point	**Data set:** -	**Function diagram:** -
	P-Group: Closed-loop control	**Units group:** FREQUENCY	**Unit selection:** -
	Min	**Max**	**Factory setting**
	- [Hz]	- [Hz]	- [Hz]

Description: Displays the power-on slip frequency for the Rs adaptation of the induction motor.

r1791 Motor model IM Lh adaptation switch-on frequency / MotMod Lh f_on

VECTOR (n/M)	**Can be changed:** -		**Access level:** 4
	Data type: Floating Point	**Data set:** -	**Function diagram:** -
	P-Group: Closed-loop control	**Units group:** FREQUENCY	**Unit selection:** -
	Min	**Max**	**Factory setting**
	- [Hz]	- [Hz]	- [Hz]

Description: Displays the power-on stator frequency / primary section frequency for the Lh adaptation of the induction motor.

r1792 Motor model IM Lh adaptation switch-on slip / MotMod Lh fslip

VECTOR (n/M)	**Can be changed:** -		**Access level:** 4
	Data type: Floating Point	**Data set:** -	**Function diagram:** -
	P-Group: Closed-loop control	**Units group:** FREQUENCY	**Unit selection:** -
	Min	**Max**	**Factory setting**
	- [Hz]	- [Hz]	- [Hz]

Description: Displays the power-on slip frequency for the Lh adaptation of the induction motor.

© Siemens AG, 2005. All rights reserved

p1795[0...n] Motor model PESM kT adaptation integral action time / MotMod kT Tn

VECTOR (n/M)	**Can be changed:** U, T		**Access level:** 3
	Data type: Floating Point	**Data set:** DDS	**Function diagram:** 6731
	P-Group: Closed-loop control	**Units group:** TIME_M3	**Unit selection:** p0528
	Min	**Max**	**Factory setting**
	10 [ms]	10000 [ms]	100 [ms]

Description: Sets the integral action time for the kT adaptation of the motor model for the synchronous motor.

r1797 Motor model PESM kT adaptation correction value / MotMod kT corr

VECTOR (n/M)	**Can be changed:** -		**Access level:** 3
	Data type: Floating Point	**Data set:** -	**Function diagram:** 6731
	P-Group: Closed-loop control	**Units group:** TORQUE_PER_CURR	**Unit selection:** -
	Min	**Max**	**Factory setting**
	- [Nm/A]	- [Nm/A]	- [Nm/A]

Description: Displays the correction value for the kT adaptation of the motor model for the synchronous motor.

p1800[0...n] Pulse frequency / Pulse frequency

SERVO, VECTOR	**Can be changed:** U, T		**Access level:** 2
	Data type: Floating Point	**Data set:** DDS	**Function diagram:** -
	P-Group: Modulation	**Units group:** FREQUENCY_P3	**Unit selection:** -
	Min	**Max**	**Factory setting**
	1.000 [kHz]	32.000 [kHz]	4.000 [kHz]

Description: Sets the drive converter switching frequency.

This parameter is preset to the rated converter value when the drive is first commissioned.

Dependency: The switching frequency can only be changed in an integer ratio to the current controller sampling rate (p0115[0]).

The minimum pulse frequency is half the value of the current controller sampling rate (current controller frequency).

If a sinusoidal filter is parameterized as output filter (p0230 = 3), then the pulse frequency cannot be changed below the minimum value required for the filter.

Refer to: p0110, p0111, p0112, p0115, p0230, p1817

Note: The maximum possible pulse frequency is also determined by the power module being used.

When the pulse frequency is increased, depending on the particular power module, the maximum output current can be reduced (de-rating, refer to r0067).

r1801 Actual pulse frequency / Pulse freq actual

VECTOR	**Can be changed:** -		**Access level:** 3
	Data type: Floating Point	**Data set:** -	**Function diagram:** -
	P-Group: Displays, signals	**Units group:** FREQUENCY_P3	**Unit selection:** -
	Min	**Max**	**Factory setting**
	- [kHz]	- [kHz]	- [kHz]

Description: Displays the actual converter switching frequency.

Note: The selected pulse frequency (p1800) may be reduced if the drive converter has overload condition (refer to p0290).

The following applies for VECTOR drives (refer to p0107):

The pulse frequency can also be reduced when changing-over the modulator to an optimized pulse pattern. This is used to avoid overdriving.

© Siemens AG, 2005. All rights reserved

p1802[0...n] Modulator mode / Modulator mode

VECTOR	**Can be changed:** T		**Access level:** 3
	Data type: Integer16	**Data set:** DDS	**Function diagram:** -
	P-Group: Modulation	**Units group:** -	**Unit selection:** -
	Min	**Max**	**Factory setting**
	0	9	0

Description: Sets the modulator mode.

Values:
0: Automatic changeover SVM/FLB
1: Flat top modulation (FLB)
2: Space VECTOR modulation (SVM)
3: SVM without overmodulation
4: SVM/FLB without overcontrol
5: SVM with pulse frequency reduction
6: SVM/FLB with pulse frequency reduction
7: Edge modulation from 100 Hz
8: Edge modulation from 60 Hz
9: Edge modulation from 28 Hz

Dependency: If a sinusoidal filter is parameterized as output filter (p0230 = 3, 4), then only space VECTOR modulation without overcontrol can be set as modulation type (p1802 = 3).
Refer to: p0230

Note: When modulation modes are enabled that could lead to overmodulation (p1802 = 0, 1, 2, 5, 6), the modulation depth must be limited using p1803. The higher the overmodulation, the greater the current ripple and torque ripple.
When changing p1802[x], the values for all of the other existing indices are also changed.

p1803[0...n] Maximum modulation depth / Modulat depth max

VECTOR	**Can be changed:** U, T		**Access level:** 3
	Data type: Floating Point	**Data set:** DDS	**Function diagram:** 6723
	P-Group: Modulation	**Units group:** PERCENT	**Unit selection:** -
	Min	**Max**	**Factory setting**
	20.0 [%]	150.0 [%]	100.0 [%]

Description: Defines the maximum modulation depth.

Note: p1803 = 100 % is the overcontrol limit for space VECTOR modulation (or an ideal drive converter without any switching delay).
If an optimized pulse pattern is enabled (edge modulation), then the modulation depth is limited to below the output frequency of 28 Hz as there is no optimized pulse pattern in this range.

p1804[0...n] Filter time constant smoothed modulation index / T_filt mod_idxSmth

VECTOR	**Can be changed:** U, T		**Access level:** 4
	Data type: Floating Point	**Data set:** DDS	**Function diagram:** -
	P-Group: Modulation	**Units group:** TIME_M3	**Unit selection:** -
	Min	**Max**	**Factory setting**
	0.0 [ms]	10000.0 [ms]	10.0 [ms]

Description: Filter time constant for the smoothed modulation index to change over the modulator mode.

p1806[0...n] Filter time constant Vdc correction / T_filt Vdc_corr

VECTOR	**Can be changed:** U, T		**Access level:** 4
	Data type: Floating Point	**Data set:** DDS	**Function diagram:** -
	P-Group: Closed-loop control	**Units group:** TIME_M3	**Unit selection:** -
	Min	**Max**	**Factory setting**
	0.0 [ms]	10000.0 [ms]	0.0 [ms]

Description: Sets the filter time constant of the DC link voltage used to calculate the modulation depth.

© Siemens AG, 2005. All rights reserved

r1807 Actual DC-link voltage to calculate the modulation depth / VdcActValMod_depth

VECTOR	**Can be changed:** -		**Access level:** 4
	Data type: Floating Point	**Data set:** -	**Function diagram:** -
	P-Group: Displays, signals	**Units group:** VOLTAGE_DC	**Unit selection:** -
	Min	**Max**	**Factory setting**
	- [V]	- [V]	- [V]

Description: DC link voltage that is used to convert the setpoint voltage into an equivalent modulation depth.

Note: p1737 can be used for filtering.

r1808 DC link voltage actual value for V_max calculation / Vdc act val U_max

VECTOR	**Can be changed:** -		**Access level:** 4
	Data type: Floating Point	**Data set:** -	**Function diagram:** -
	P-Group: Displays, signals	**Units group:** VOLTAGE_DC	**Unit selection:** -
	Min	**Max**	**Factory setting**
	- [V]	- [V]	- [V]

Description: DC link voltage used to determine the maximum possible output voltage.

r1809 Modulator mode actual / Modulator mode act

VECTOR	**Can be changed:** -		**Access level:** 4
	Data type: Integer16	**Data set:** -	**Function diagram:** -
	P-Group: Modulation	**Units group:** -	**Unit selection:** -
	Min	**Max**	**Factory setting**
	-	-	-

Description: Displays the effective modulator mode.

Values:
1: Flat top modulation (FLB)
2: Space VECTOR modulation (SVM)
3: Edge modulation from 28 Hz; 23:3
4: Edge modulation from 28 Hz; 19:1
5: Edge modulation from 60 Hz; 17:3
6: Edge modulation from 60 Hz; 17:1
7: Edge modulation from 100 Hz; 9:2
8: Edge modulation from 100 Hz; 9:1

p1817 Minimum ratio, pulse frequency to the output frequency / Min f_puls / f_max

VECTOR	**Can be changed:** C2(2)		**Access level:** 4
	Data type: Floating Point	**Data set:** -	**Function diagram:** -
	P-Group: Converter	**Units group:** -	**Unit selection:** -
	Min	**Max**	**Factory setting**
	8.3	15.0	12.0

Description: Sets the minimum ratio between the pulse frequency and the output frequency.

Notice: If the ratio between the pulse frequency and the output frequency is reduced, then oscillations can occur in the output current that can result in significant levels of current ripple with the appropriate negative effects.

Note: When the maximum speed is changed, the pulse frequency p1800 is automatically limited to this minimum ratio. It is not permissible to reduce the pulse frequency if this would result in this ratio being fallen below.

© Siemens AG, 2005. All rights reserved

p1825 Converter valve threshold voltage / Threshold voltage

VECTOR	**Can be changed:** U, T		**Access level:** 4
	Data type: Floating Point	**Data set:** -	**Function diagram:** -
	P-Group: Modulation	**Units group:** VOLTAGE_AC_EFF	**Unit selection:** -
	Min	**Max**	**Factory setting**
	0.0 [Veff]	100.0 [Veff]	1.0 [Veff]

Description: Sets the threshold voltage drop of the valves (power semiconductor devices) to be compensated.

Note: The value is automatically calculated in the motor data identification routine.

p1827 Infeed compensation valve lockout time operating mode / INFcomp t_lockMode

A_INF, S_INF	**Can be changed:** U, T		**Access level:** 4
	Data type: Integer16	**Data set:** -	**Function diagram:** -
	P-Group: Modulation	**Units group:** -	**Unit selection:** -
	Min	**Max**	**Factory setting**
	0	1	0

Description: Sets the operating mode for the compensation of the valve lockout time.

Values:
0: Compensation valve lockout time de-activated
1: Compensation valve lockout time activated

Note: The compensation is also active if, for power modules connected in parallel, the control to suppress circulating currents is activated (p7035).

p1828 Compensation valve lockout time phase U / Comp t_lock ph U

VECTOR	**Can be changed:** U, T		**Access level:** 4
	Data type: Floating Point	**Data set:** -	**Function diagram:** -
	P-Group: Modulation	**Units group:** TIME_M6	**Unit selection:** -
	Min	**Max**	**Factory setting**
	0.00 [µs]	1000000.00 [µs]	0.00 [µs]

Description: Sets the valve lockout time to compensate for phase U.

Note: The value is automatically calculated in the motor data identification routine.

p1829 Compensation valve lockout time phase V / Comp t_lock ph V

VECTOR	**Can be changed:** U, T		**Access level:** 4
	Data type: Floating Point	**Data set:** -	**Function diagram:** -
	P-Group: Modulation	**Units group:** TIME_M6	**Unit selection:** -
	Min	**Max**	**Factory setting**
	0.00 [µs]	1000000.00 [µs]	0.00 [µs]

Description: Sets the valve lockout time to compensate for phase V.

p1830 Compensation valve lockout time phase W / Comp t_lock ph W

VECTOR	**Can be changed:** U, T		**Access level:** 4
	Data type: Floating Point	**Data set:** -	**Function diagram:** -
	P-Group: Modulation	**Units group:** TIME_M6	**Unit selection:** -
	Min	**Max**	**Factory setting**
	0.00 [µs]	1000000.00 [µs]	0.00 [µs]

Description: Sets the valve lockout time to compensate for phase W.

© Siemens AG, 2005. All rights reserved

p1832 Deadtime compensation current level / t_dead_comp I_lev

VECTOR	**Can be changed:** U, T		**Access level:** 3
	Data type: Floating Point	**Data set:** -	**Function diagram:** -
	P-Group: Modulation	**Units group:** CURRENT_AC_EFF	**Unit selection:** -
	Min	**Max**	**Factory setting**
	0.0 [Aeff]	10000.0 [Aeff]	0.0 [Aeff]

Description: Above the current level, the deadtime - resulting from the converter switching delays - is compensated by a previously calculated, constant value . If the relevant phase current setpoint falls below the absolute value defined by p1832, the correction value for this phase is continuously reduced.

Dependency: The factor setting of p1832 is automatically set to 0.02 * rated drive converter current (r0207).
If the actual operating frequency exceeds the value of p1831, then p1832 is not applied!

r1837 Gating unit configuration / Gating unit config

VECTOR	**Can be changed:** -		**Access level:** 3
	Data type: Unsigned16	**Data set:** -	**Function diagram:** -
	P-Group: Modulation	**Units group:** -	**Unit selection:** -
	Min	**Max**	**Factory setting**
	-	-	-

Description: Display for the configuration of the gating unit driver.

Bit field:

Bit	Signal name	0 signal	1 signal	FP
05	Simulation mode	Not active	active	-

p1840[0...n] Actual value correction, configuration / ActVal_corr config

VECTOR	**Can be changed:** T		**Access level:** 4
	Data type: Unsigned16	**Data set:** DDS	**Function diagram:** -
	P-Group: Modulation	**Units group:** -	**Unit selection:** -
	Min	**Max**	**Factory setting**
	0000 bin	0011 bin	0000 bin

Description: Configuration of the actual value correction

Bit field:

Bit	Signal name	0 signal	1 signal	FP
00	Actual value correction de-activated	No	Yes	-
01	Compares the integrals from modulator and setpoint	No	Yes	-

Note: During operation (the pulses enabled) the configuration cannot be changed by changing-over drive data sets.

© Siemens AG, 2005. All rights reserved

r1841 Actual value correction, status word / ActVal_corr status

VECTOR

Can be changed: -
Access level: 4
Data type: Unsigned16
Data set: -
Function diagram: -
P-Group: Modulation
Units group: -
Unit selection: -

Min	Max	Factory setting
-	-	-

Description: Status of the actual value correction

Bit field:

Bit	Signal name	0 signal	1 signal	FP
00	Hardware for the actual value correction detected	No	Yes	-
01	VECTOR overflow	No	Yes	-
04				-
05				-
06				-
07				-
08				-
09				-
10				-
11				-
12				-
13				-
14				-
15	Actual value correction active	No	Yes	-

p1845[0...n] Actual value correction evaluation factor Lsig / ActV_corr FactLsig

VECTOR

Can be changed: U, T
Access level: 4
Data type: Floating Point
Data set: DDS
Function diagram: -
P-Group: Modulation
Units group: -
Unit selection: -

Min	Max	Factory setting
0.00	10.00	1.50

Description: Sets the weighting factor for the leakage inductance of the L-R element of the actual value correction.

p1846[0...n] Actual value correction damping factor / ActV_corr D_factor

VECTOR

Can be changed: U, T
Access level: 4
Data type: Floating Point
Data set: DDS
Function diagram: -
P-Group: Modulation
Units group: -
Unit selection: -

Min	Max	Factory setting
0.00	10.00	1.00

Description: Sets the damping factor for the actual value correction.
The factor multiplies the T0/Tsig ratio in the feedback branch of the LR element

© Siemens AG, 2005. All rights reserved

r1848[0...5] Actual value correction, phase currents / ActVal_corr I_corr

VECTOR	**Can be changed:** -		**Access level:** 4
	Data type: Floating Point	**Data set:** -	**Function diagram:** -
	P-Group: Modulation	**Units group:** -	**Unit selection:** -
	Min	**Max**	**Factory setting**
	-	-	-

Description: Displays phase correction currents as well as the drive converter phase currents

Index:
[0] = Harmonics, phase U
[1] = Harmonics, phase V
[2] = Harmonics, phase W
[3] = Meas. val. phase U
[4] = Meas. val. phase V
[5] = Meas. val. phase W

r1849[0...5] Actual value correction, phase voltages / ActVal_corr V_corr

VECTOR	**Can be changed:** -		**Access level:** 4
	Data type: Floating Point	**Data set:** -	**Function diagram:** -
	P-Group: Modulation	**Units group:** -	**Unit selection:** -
	Min	**Max**	**Factory setting**
	-	-	-

Description: Displays the phase correction voltages and and the drive converter phase voltages

Index:
[0] = Harmonics, phase U
[1] = Harmonics, phase V
[2] = Harmonics, phase W
[3] = Meas. val. phase U
[4] = Meas. val. phase V
[5] = Meas. val. phase W

© Siemens AG, 2005. All rights reserved

p1900 Motor data identification and rotating measurement / Mot ID rot meas

VECTOR	**Can be changed:** C2(1), T		**Access level:** 1
	Data type: Integer16	**Data set:** -	**Function diagram:** -
	P-Group: Motor identification	**Units group:** -	**Unit selection:** -
	Min	**Max**	**Factory setting**
	0	2	2

Description: Sets the motor data identification and speed/velocity controller optimization.

p1900 = 0:

Function inhibited.

p1900 = 1:

Induction motors --> set p1910 = 1 and p1960 = 0, 1, 2 depending on p1300

Permanent-magnet synchronous motors --> set p1910 = 1 and p1990 = 1 and p1960 = 0, 1, 2 depending on p1300

When the drive enable signals are present, a motor data identification routine is carried-out at standstill with the next power-on command. Current flows through the motor which means that it can align itself by up to a quarter of a revolution.

For synchronous motors, the encoder is adjusted with the next power-on command. The motor must be free to rotate and rotates through 1.5 revolutions of the motor encoder.

With the following power-on command, a rotating motor data identification routine is carried-out - and for VECTOR, in addition, a speed/velocity controller optimization by making measurements at different motor speeds/velocities.

p1900 = 2:

Induction motors --> set p1910 = 1 and p1960 = 0

Permanent-magnet synchronous motors --> set p1910 = 1, p1990 = 1 and p1960 = 0

When the drive enable signals are present, a motor data identification routine is carried-out at standstill with the next power-on command. Current flows through the motor which means that it can align itself by up to a quarter of a revolution.

For synchronous motors, the encoder is adjusted with the next power-on command. The motor must be free to rotate and rotates through 1.5 revolutions of the motor encoder.

Values:

0: Inhibited
1: Motor data identification for rotating motor
2: Motor data identification at standstill

Dependency: VECTOR:

In the simulation mode, the parameter cannot be written into.

Refer to: p1272, p1300, p1910, p1960, p1990

Refer to: A07980, A07981, F07982, F07983, F07984, F07985, F07986, A07987, F07988, F07990, A07991

Notice: In order to permanently accept the determined settings they must be saved in a non-volatile fashion (p0971, p0977).

Note: An appropriate alarm is output when the parameter is set.

The power-on command must remain set during a measurement and after the measurement has been completed, the drive automatically resets it.

The duration of the measurements can lie between 0.3 s and several minutes. This time is, for example, influenced by the motor size and the mechanical conditions.

p1900 is automatically set to 0 after the motor data identification routine has been completed.

© Siemens AG, 2005. All rights reserved

p1909[0...n] Motor data identification control word / MotID STW

VECTOR

Can be changed: T | **Access level:** 4

Data type: Unsigned16 | **Data set:** MDS | **Function diagram:** -

P-Group: Motor identification | **Units group:** - | **Unit selection:** -

Min	Max	Factory setting
0000 bin	0001 1111 1111 1111 bin	0000 bin

Description: Sets the configuration of the motor data identification.

Bit field:

Bit	Signal name	0 signal	1 signal	FP
00	Estimates the stator inductance, no measurement	No	Yes	-
01	Cl.-loop current control w/ dead-beat controller	No	Yes	-
02	Estimates the rotor time constant, no measurement	No	Yes	-
03	Estimates the leakage inductance, no measurement	No	Yes	-
04	Activates the identification dynamic leakage inductance	No	Yes	-
05	Determine Tr. Lsig evaluation in the time range	No	Yes	-
06	Activates vibration damping	No	Yes	-
07	De-activates the vibration detection	No	Yes	-
11	De-activate Lq/Ld ratio measurement	No	Yes	-
12	De-activate rotor resistance Rr measurement	No	Yes	-

p1910 Motor data identification selection / MotID selection

VECTOR

Can be changed: T | **Access level:** 2

Data type: Integer16 | **Data set:** - | **Function diagram:** -

P-Group: Motor identification | **Units group:** - | **Unit selection:** -

Min	Max	Factory setting
0	20	1

Description: Sets the motor data identification routine.

The motor data identification routine is carried-out after the next power-on command.

p1910 = 1:

All motor data and the drive converter characteristics are identified and then transferred to the following parameters:

p0350, p0354, p0356, p0357, p0358, p0360, p1825, p1828, p1829, p1830

Values:

0: Inhibited
1: Complete identification (ID) and acceptance of motor data
2: Complete identification (ID) of motor data without acceptance
3: ID of the saturation characteristic and acceptance
4: ID of the saturation characteristic without acceptance
5: ID of dynamic leakage inductance Lsig (r1920) without acceptance
6: ID of lockout time (r1926) without acceptance
7: ID of stator resistance Rs (r1912) without acceptance
8: ID of stator inductance Ls (r1915) without acceptance
9: ID of rotor time constant Tr (r1913) without acceptance
10: ID of static leakage inductance Lsig (r1914) without acceptance
20: Voltage VECTOR input

Dependency: "Quick commissioning" must be carried-out (p0010 = 1) before executing the motor data identification routine!

In the simulation mode, the parameter cannot be written into. When selecting the motor data identification routine, the drive data set changeover is suppressed.

Refer to: p1272, p1900

© Siemens AG, 2005. All rights reserved

Caution: After the motor data identification (p1910 > 0) has been selected, alarm A07991 is output and a motor data identification routine is carried-out as follows at the next power-on command:
- current flows through the motor and a voltage is present at the drive converter output terminals.
- during the identification routine, the motor shaft can rotate through a maximum of half a revolution.
- however, no torque torque is generated.

Notice: In order to permanently accept the determined settings they must be saved in a non-volatile fashion (p0971, p0977).

Note: When setting p1910, the following should be observed:
1. "With transfer" means:
The parameters specified in the description are overwritten with the identified values and therefore have an influence on the controller setting.
2. "Without transfer" means:
The identified parameters are only displayed in the range r1912 ... r1926. The controller settings remain unchanged.

p1911 Number of phases to be identified / Phases to be ident

VECTOR

Can be changed: T		**Access level:** 4
Data type: Integer16	**Data set:** -	**Function diagram:** -
P-Group: Motor identification	**Units group:** -	**Unit selection:** -
Min	**Max**	**Factory setting**
1	3	1

Description: Selects the number of phases to be identified.
The accuracy of the identification routine is higher if several phases are identified - however, the time required to make the measurements also increases.

Values:
1: 1 phase U
2: 2 phases U, V
3: 3 phases U, V, W

r1912[0...2] Identified stator resistance / R_stator ident

VECTOR

Can be changed: -		**Access level:** 3
Data type: Floating Point	**Data set:** -	**Function diagram:** -
P-Group: Motor identification	**Units group:** RESISTANCE	**Unit selection:** -
Min	**Max**	**Factory setting**
- [Ohm]	- [Ohm]	- [Ohm]

Description: Displays the identified stator resistance.

Index:
[0] = Phase U
[1] = Phase V
[2] = Phase W

r1913[0...2] Identified rotor time constant / T_rotor ident

VECTOR

Can be changed: -		**Access level:** 3
Data type: Floating Point	**Data set:** -	**Function diagram:** -
P-Group: Motor identification	**Units group:** TIME_M3	**Unit selection:** -
Min	**Max**	**Factory setting**
- [ms]	- [ms]	- [ms]

Description: Displays the identified rotor time constant.

Index:
[0] = Phase U
[1] = Phase V
[2] = Phase W

© Siemens AG, 2005. All rights reserved

r1914[0...2] Identified total leakage inductance / L_total_leak ident

VECTOR	**Can be changed:** -		**Access level:** 3
	Data type: Floating Point	**Data set:** -	**Function diagram:** -
	P-Group: Motor identification	**Units group:** INDUCTANCE_M3	**Unit selection:** -
	Min	**Max**	**Factory setting**
	- [mH]	- [mH]	- [mH]

Description: Displays the identified total leakage inductance.

Index: [0] = Phase U
[1] = Phase V
[2] = Phase W

r1915[0...2] Identified nominal stator inductance / L_stator ident

VECTOR	**Can be changed:** -		**Access level:** 3
	Data type: Floating Point	**Data set:** -	**Function diagram:** -
	P-Group: Motor identification	**Units group:** INDUCTANCE_M3	**Unit selection:** -
	Min	**Max**	**Factory setting**
	- [mH]	- [mH]	- [mH]

Description: Displays the nominal stator inductance identified.

Index: [0] = Phase U
[1] = Phase V
[2] = Phase W

r1916[0...2] Identified stator inductance 1 / L_stator 1 ident

VECTOR	**Can be changed:** -		**Access level:** 3
	Data type: Floating Point	**Data set:** -	**Function diagram:** -
	P-Group: Motor identification	**Units group:** INDUCTANCE_M3	**Unit selection:** -
	Min	**Max**	**Factory setting**
	- [mH]	- [mH]	- [mH]

Description: Displays the nominal stator inductance identified for the 1st point of the saturation characteristic.

Index: [0] = Phase U
[1] = Phase V
[2] = Phase W

r1917[0...2] Identified stator inductance 2 / L_stator 2 ident

VECTOR	**Can be changed:** -		**Access level:** 3
	Data type: Floating Point	**Data set:** -	**Function diagram:** -
	P-Group: Motor identification	**Units group:** INDUCTANCE_M3	**Unit selection:** -
	Min	**Max**	**Factory setting**
	- [mH]	- [mH]	- [mH]

Description: Displays the nominal stator inductance identified for the 2nd point of the saturation characteristic.

Index: [0] = Phase U
[1] = Phase V
[2] = Phase W

© Siemens AG, 2005. All rights reserved

r1918[0...2] Identified stator inductance 3 / L_stator 3 ident

VECTOR	**Can be changed:** -		**Access level:** 3
	Data type: Floating Point	**Data set:** -	**Function diagram:** -
	P-Group: Motor identification	**Units group:** INDUCTANCE_M3	**Unit selection:** -
	Min	**Max**	**Factory setting**
	- [mH]	- [mH]	- [mH]

Description: Displays the nominal stator inductance identified for the 3rd point of the saturation characteristic.

Index: [0] = Phase U
[1] = Phase V
[2] = Phase W

r1919[0...2] Identified stator inductance 4 / L_stator 4 ident

VECTOR	**Can be changed:** -		**Access level:** 3
	Data type: Floating Point	**Data set:** -	**Function diagram:** -
	P-Group: Motor identification	**Units group:** INDUCTANCE_M3	**Unit selection:** -
	Min	**Max**	**Factory setting**
	- [mH]	- [mH]	- [mH]

Description: Displays the nominal stator inductance identified for the 4th point of the saturation characteristic.

Index: [0] = Phase U
[1] = Phase V
[2] = Phase W

r1920[0...2] Identified dynamic leakage inductance / L_leak dyn ident

VECTOR	**Can be changed:** -		**Access level:** 3
	Data type: Floating Point	**Data set:** -	**Function diagram:** -
	P-Group: Motor identification	**Units group:** INDUCTANCE_M3	**Unit selection:** -
	Min	**Max**	**Factory setting**
	- [mH]	- [mH]	- [mH]

Description: Displays the identified dynamic total leakage inductance.

Index: [0] = Phase U
[1] = Phase V
[2] = Phase W

r1921[0...2] Identified dynamic leakage inductance 1 / L_leak 1 dyn id

VECTOR	**Can be changed:** -		**Access level:** 3
	Data type: Floating Point	**Data set:** -	**Function diagram:** -
	P-Group: Motor identification	**Units group:** INDUCTANCE_M3	**Unit selection:** -
	Min	**Max**	**Factory setting**
	- [mH]	- [mH]	- [mH]

Index: [0] = Phase U
[1] = Phase V
[2] = Phase W

© Siemens AG, 2005. All rights reserved

r1922[0...2] Identified dynamic leakage inductance 2 / L_leak 2 dyn id

VECTOR	**Can be changed:** -		**Access level:** 3
	Data type: Floating Point	**Data set:** -	**Function diagram:** -
	P-Group: Motor identification	**Units group:** INDUCTANCE_M3	**Unit selection:** -
	Min	**Max**	**Factory setting**
	- [mH]	- [mH]	- [mH]

Index: [0] = Phase U
[1] = Phase V
[2] = Phase W

r1923[0...2] Identified dynamic leakage inductance 3 / L_leak 3 dyn id

VECTOR	**Can be changed:** -		**Access level:** 3
	Data type: Floating Point	**Data set:** -	**Function diagram:** -
	P-Group: Motor identification	**Units group:** INDUCTANCE_M3	**Unit selection:** -
	Min	**Max**	**Factory setting**
	- [mH]	- [mH]	- [mH]

Index: [0] = Phase U
[1] = Phase V
[2] = Phase W

r1924[0...2] Identified dynamic leakage inductance 4 / L_leak 4 dyn id

VECTOR	**Can be changed:** -		**Access level:** 3
	Data type: Floating Point	**Data set:** -	**Function diagram:** -
	P-Group: Motor identification	**Units group:** INDUCTANCE_M3	**Unit selection:** -
	Min	**Max**	**Factory setting**
	- [mH]	- [mH]	- [mH]

Index: [0] = Phase U
[1] = Phase V
[2] = Phase W

r1925[0...2] Identified threshold voltage / U_threshold ident

VECTOR	**Can be changed:** -		**Access level:** 3
	Data type: Floating Point	**Data set:** -	**Function diagram:** -
	P-Group: Motor identification	**Units group:** VOLTAGE_AC_EFF	**Unit selection:** -
	Min	**Max**	**Factory setting**
	- [Veff]	- [Veff]	- [Veff]

Description: Displays the identified IGBT threshold voltage.
Index: [0] = Phase U
[1] = Phase V
[2] = Phase W

r1926[0...2] Identified active valve lockout time / t_lock_valve id

VECTOR	**Can be changed:** -		**Access level:** 4
	Data type: Floating Point	**Data set:** -	**Function diagram:** -
	P-Group: Motor identification	**Units group:** TIME_M6	**Unit selection:** -
	Min	**Max**	**Factory setting**
	- [µs]	- [µs]	- [µs]

Description: Displays the identified effective valve lockout time.
Index: [0] = Phase U
[1] = Phase V
[2] = Phase W

© Siemens AG, 2005. All rights reserved

r1927[0...2] Identified rotor resistance / R_rotor ident

VECTOR	**Can be changed:** -		**Access level:** 4
	Data type: Floating Point	**Data set:** -	**Function diagram:** -
	P-Group: Motor identification	**Units group:** RESISTANCE	**Unit selection:** -
	Min	**Max**	**Factory setting**
	- [Ohm]	- [Ohm]	- [Ohm]

Description: Displays the identified rotor resistance

Index: [0] = Phase U
[1] = Phase V
[2] = Phase W

r1929[0...2] Identified cable resistance / R_cable ident

VECTOR	**Can be changed:** -		**Access level:** 3
	Data type: Floating Point	**Data set:** -	**Function diagram:** -
	P-Group: Motor identification	**Units group:** RESISTANCE	**Unit selection:** -
	Min	**Max**	**Factory setting**
	- [Ohm]	- [Ohm]	- [Ohm]

Description: Displays the identified cable resistance.

Index: [0] = Phase U
[1] = Phase V
[2] = Phase W

p1959[0...n] Rotating measurement configuration / Rot meas config

VECTOR (n/M)	**Can be changed:** T		**Access level:** 2
	Data type: Unsigned16	**Data set:** DDS	**Function diagram:** -
	P-Group: Motor identification	**Units group:** -	**Unit selection:** -
	Min	**Max**	**Factory setting**
	0000 bin	0001 1111 bin	0001 1111 bin

Description: Sets the configuration of the rotating measurement.

Bit field:

Bit	Signal name	0 signal	1 signal	FP
00	Enc test active	No	Yes	-
01	Saturation characteristic identification	No	Yes	-
02	Moment of inertia identification	No	Yes	-
03	Recalculates the speed controller parameters	No	Yes	-
04	Speed controller optimization, (vibration test)	No	Yes	-

Dependency: Refer to: F07988

Note: The encoder is only tested if the rotating measurement with encoder is selected (p1960 = 2).
The following parameters are influenced for the individual optimization steps:
Bit 00: None
Bit 01: p0320, p0360, p0362 ... p0369
Bit 02: p0341, p0342
Bit 03: p1400.0, p1458, p1459, p1460, p1462, p1462, p1463, p1470, p1472, p1496
Bit 04: Dependent on p1960
p1960 = 1, 3: p1400.0, p1458, p1459, p1470, p1472, p1496
p1960 = 2, 4: p1458, p1459, p1460, p1461, p1462, p1463, p1496

© Siemens AG, 2005. All rights reserved

p1960 Rotating measurement selection / Rot meas sel

VECTOR	**Can be changed:** T		**Access level:** 2
	Data type: Integer16	**Data set:** -	**Function diagram:** -
	P-Group: Motor identification	**Units group:** -	**Unit selection:** -
	Min	**Max**	**Factory setting**
	0	4	0

Description: Sets the rotating measurement.

The rotating measurement is carried-out after the next power-on command.

The setting possibilities of the parameter depend on the open-loop/closed-loop control mode (p1300):

p1300 < 20 (V/f control): It is not possible to select the rotating measurement or the speed controller optimization routine.

p1300 = 20, 22 (sensorless operation): Only rotating measurement or the speed controller optimization routine can be selected in the sensorless mode.

p1300 = 21, 23 (operation with encoder): Both versions (sensorless and with encoder) of the rotating measurement or the speed controller optimization routine can be selected.

Values:
0: Inhibited
1: Rotating measurement in sensorless operation
2: Rotating measurement with encoder
3: Speed controller optimization for sensorless operation
4: Speed controller optimization with encoder

Dependency: In the simulation mode, a value of 1 cannot be written into the parameter. When selecting the rotating measurement, the drive data set changeover is suppressed.

Refer to: p1272, p1300, p1900, p1959

Refer to: A07987

Notice: In order to permanently accept the determined settings they must be saved in a non-volatile fashion (p0971, p0977).

Note: When the rotating measurement is activated, it is not possible to save the parameters (p0971, p0977).

Parameter changes are automatically made for the rotating measurement (e.g. p1120); this is the reason that up to the end of the measurement, and if no faults are present, no manual changes should be made.

p1961 Saturation characteristic speed to determine / Sat_char n determ

VECTOR (n/M)	**Can be changed:** U, T		**Access level:** 3
	Data type: Floating Point	**Data set:** -	**Function diagram:** -
	P-Group: Motor identification	**Units group:** PERCENT	**Unit selection:** -
	Min	**Max**	**Factory setting**
	26 [%]	75 [%]	30 [%]

Description: Sets the speed to determine the saturation characteristic and the encoder test.

The percentage value is referred to p0310 (rated motor frequency).

Dependency: Refer to: p0310, p1959

Refer to: F07983

Note: The saturation characteristics should be determined at an operating point with the lowest possible load.

r1962[0...4] Saturation characteristic, magnetizing current / Sat_char I_mag

VECTOR (n/M)	**Can be changed:** -		**Access level:** 4
	Data type: Floating Point	**Data set:** -	**Function diagram:** -
	P-Group: Motor identification	**Units group:** PERCENT	**Unit selection:** -
	Min	**Max**	**Factory setting**
	- [%]	- [%]	- [%]

Description: Displays the magnetizing currents of the identified saturation characteristic.

The values are referred to r0331.

After they have been determined, the values are transferred to p0366 ... p0369.

© Siemens AG, 2005. All rights reserved

Index: [0] = Value 1
[1] = Value 2
[2] = Value 3
[3] = Value 4
[4] = Value 5

Dependency: Refer to: r0331

r1963[0...4] Saturation characteristic, magnetizing inductance / Sat_char L_main

VECTOR (n/M)

Can be changed: -		**Access level:** 4
Data type: Floating Point	**Data set:** -	**Function diagram:** -
P-Group: Motor identification	**Units group:** PERCENT	**Unit selection:** -
Min	**Max**	**Factory setting**
- [%]	- [%]	- [%]

Description: Displays the magnetizing inductances of the identified saturation characteristic.
The values are referred to r0382.

Index: [0] = Value 1
[1] = Value 2
[2] = Value 3
[3] = Value 4
[4] = Value 5

Dependency: Refer to: r0382

r1964[0...4] Saturation characteristic, rotor flux / Sat_char rot flux

VECTOR (n/M)

Can be changed: -		**Access level:** 4
Data type: Floating Point	**Data set:** -	**Function diagram:** -
P-Group: Motor identification	**Units group:** PERCENT	**Unit selection:** -
Min	**Max**	**Factory setting**
- [%]	- [%]	- [%]

Description: Displays the rotor flux values of the identified saturation characteristic.
After they have been determined, the values are transferred to p0362 ... p0365.

Index: [0] = Value 1
[1] = Value 2
[2] = Value 3
[3] = Value 4
[4] = Value 5

p1965 Speed_ctrl_opt speed / n_opt speed

VECTOR (n/M)

Can be changed: U, T		**Access level:** 3
Data type: Floating Point	**Data set:** -	**Function diagram:** -
P-Group: Motor identification	**Units group:** PERCENT	**Unit selection:** -
Min	**Max**	**Factory setting**
10 [%]	75 [%]	50 [%]

Description: Sets the speed for the identification of the moment of inertia and the vibration test.
Induction motor:
The percentage value is referred to p0310 (rated motor frequency).
Synchronous motor:
The percentage value is referred to the minimum from p0310 (rated motor frequency) and p1082 (maximum speed).

Dependency: Refer to: p0310, p1959
Refer to: F07984, F07985

Note: In order to calculate the inertia, sudden speed changes are carried-out - the specified value corresponds to the lower speed setpoint. This value is increased by 10 % for the upper speed value.

© Siemens AG, 2005. All rights reserved

p1967 Speed_ctrl_opt dynamic factor / n_opt dyn_factor

VECTOR (n/M)	**Can be changed:** U, T		**Access level:** 3
	Data type: Floating Point	**Data set:** -	**Function diagram:** -
	P-Group: Motor identification	**Units group:** PERCENT	**Unit selection:** -
	Min	**Max**	**Factory setting**
	1 [%]	400 [%]	100 [%]

Description: Sets the dynamic response factor for speed controller optimization.
Dependency: Refer to: p1959
Refer to: F07985

r1968 Speed_ctrl_opt dynamic factor actual / n_opt dyn_fact act

VECTOR (n/M)	**Can be changed:** -		**Access level:** 3
	Data type: Floating Point	**Data set:** -	**Function diagram:** -
	P-Group: Motor identification	**Units group:** PERCENT	**Unit selection:** -
	Min	**Max**	**Factory setting**
	- [%]	- [%]	- [%]

Description: Displays the dynamic factor which is actually achieved for the vibration test
Dependency: Refer to: p1959, p1967
Refer to: F07985
Note: This dynamics factor only refers to the control mode of the speed controller set in p1960.

r1969 Speed_ctrl_opt moment of inertia determined / n_opt M_inert det

VECTOR (n/M)	**Can be changed:** -		**Access level:** 4
	Data type: Floating Point	**Data set:** -	**Function diagram:** -
	P-Group: Motor identification	**Units group:** INERTIA	**Unit selection:** -
	Min	**Max**	**Factory setting**
	- [kgm²]	- [kgm²]	- [kgm²]

Description: Displays the determined moment of inertia of the drive.
After it has been determined, the value is transferred to p0341, p0342.
Dependency: Refer to: p0341, p0342, p1959
Refer to: F07984

r1970[0...1] Speed_ctrl_opt vibration test vibration frequency determined / n_opt f_vibration

VECTOR (n/M)	**Can be changed:** -		**Access level:** 4
	Data type: Floating Point	**Data set:** -	**Function diagram:** -
	P-Group: Motor identification	**Units group:** FREQUENCY	**Unit selection:** -
	Min	**Max**	**Factory setting**
	- [Hz]	- [Hz]	- [Hz]

Description: Displays the vibration frequencies determined by the vibration test.
Index: [0] = Frequency low
[1] = Frequency high
Dependency: Refer to: p1959
Refer to: F07985

© Siemens AG, 2005. All rights reserved

r1971[0...1] Speed_ctrl_opt vibration test standard deviation determined / n_opt std. deviat.

VECTOR (n/M)

Can be changed: -		**Access level:** 4
Data type: Floating Point	**Data set:** -	**Function diagram:** -
P-Group: Motor identification	**Units group:** FREQUENCY	**Unit selection:** -
Min	**Max**	**Factory setting**
- [Hz]	- [Hz]	- [Hz]

Description: Displays the standard deviations of the vibration frequencies determined by the vibration test

Index: [0] = Standard deviation of low frequency
[1] = Standard deviation of high frequency

Dependency: Refer to: p1959
Refer to: F07985

r1972[0...1] Speed_ctrl_opt vibration test number of periods determined / n_opt period No.

VECTOR (n/M)

Can be changed: -		**Access level:** 4
Data type: Floating Point	**Data set:** -	**Function diagram:** -
P-Group: Motor identification	**Units group:** -	**Unit selection:** -
Min	**Max**	**Factory setting**
-	-	-

Description: Displays the number of periods determined by the vibration test.

Index: [0] = No. of periods of the low frequency
[1] = No. of periods of the high frequency

Dependency: Refer to: p1959
Refer to: F07985

r1973 Rotating measurement, encoder test pulse number determined / n_opt pulse No.

VECTOR (n/M)

Can be changed: -		**Access level:** 3
Data type: Integer32	**Data set:** -	**Function diagram:** -
P-Group: Motor identification	**Units group:** -	**Unit selection:** -
Min	**Max**	**Factory setting**
-	-	-

Description: Displays the number of pulses determined during the vibration test.

Note: A negative signal indicates an incorrect polarity of the encoder signal.

r1979 BO: Speed_ctrl_opt status / n_opt status

VECTOR (n/M)

Can be changed: -		**Access level:** 4
Data type: Unsigned16	**Data set:** -	**Function diagram:** -
P-Group: Motor identification	**Units group:** -	**Unit selection:** -
Min	**Max**	**Factory setting**
-	-	-

Description: Displays the status to check and monitor the states of speed controller optimization.

Bit field:

Bit	Signal name	0 signal	1 signal	FP
00	Speed controller optimization activated	No	Yes	-
01	Speed controller optimization completed	No	Yes	-
02	Speed controller optimization interrupted	No	Yes	-
04	Enc test active	No	Yes	-
05	Saturation char. identification active	No	Yes	-
06	Moment of inertia identification active	No	Yes	-
07	Recalc. speed controller parameters active	No	Yes	-
08	Speed controller vibration test active	No	Yes	-
09	Magnetizing induction adapt. active	No	Yes	-
10	Operation with encoder after sensorless operation	No	Yes	-

© Siemens AG, 2005. All rights reserved

p1980[0...n] Pole position identification technique / Pol-ID technique

SERVO

Can be changed: U, T — **Access level:** 3

Data type: Integer16 — **Data set:** MDS — **Function diagram:** -

P-Group: Motor identification — **Units group:** - — **Unit selection:** -

Min	Max	Factory setting
0	99	99

Description: Sets the pole position identification technique.

Values:
0: Saturation-based 1st+ 2nd harmonics
1: Saturation-based 1st harmonics
4: Saturation-based, 2-stage
10: Motion-based
99: No technique selected

Dependency: Refer to: p0325, p0329, p1981, p1982, p1983, r1984, r1985, r1987

Notice: If the incorrect technique is applied, this can cause the motor to accelerate in an uncontrolled fashion.

Note: When commissioning a list motor, the technique is automatically selected depending on the motor type being used.
The following applies for 1FN3 motors:
A technique with 2nd harmonic may not be used (do not use p1980 = 1, 4).
For 1FN7 motors, the following applies:
A two-stage technique may not be used (do not use p1980 = 4).
The automatically set value in p0329 may not be changed.

p1980[0...n] Pole position identification technique / Pol-ID technique

VECTOR

Can be changed: U, T — **Access level:** 3

Data type: Integer16 — **Data set:** MDS — **Function diagram:** -

P-Group: Motor identification — **Units group:** - — **Unit selection:** -

Min	Max	Factory setting
4	10	4

Description: Sets the pole position identification technique.

Values:
4: Voltage pulsing, 2-stage
10: DC current impression

Dependency: In the simulation mode, the parameter cannot be written into.
Refer to: p1272

p1981[0...n] Pole position identification maximum distance / Pol-ID max dist

SERVO

Can be changed: U, T — **Access level:** 3

Data type: Floating Point — **Data set:** MDS — **Function diagram:** -

P-Group: Motor identification — **Units group:** ANGLE — **Unit selection:** -

Min	Max	Factory setting
0 [°]	90 [°]	10 [°]

Description: Sets the maximum distance when carrying-out the pole position identification routine. If this distance (travel) is exceeded, an appropriate fault is output.

Dependency: Refer to: p0325, p0329, p1980, p1982, p1983, r1984, r1985, r1987, p1990
Refer to: F07995

© Siemens AG, 2005. All rights reserved

p1982[0...n] Pole position identification selection / Pol-ID selection

SERVO	**Can be changed:** T		**Access level:** 3
	Data type: Integer16	**Data set:** MDS	**Function diagram:** -
	P-Group: Motor identification	**Units group:** -	**Unit selection:** -
	Min	**Max**	**Factory setting**
	0	2	0

Description: Activates the pole position identification routine to determine the commutation angle and to carry-out a plausibility check.

Values:
0: Pole position identification off
1: Pole position identification for commutation
2: Pole position identification for plausibility check

Recommendation:
Re p1982 = 1:
This is used for synchronous motors with motor encoder without absolute data.
The information/data regarding the absolute commutation angle is supplied via a track C/D, Hall sensors, an absolute value encoder or from the pole position identification routine.
Re p1982 = 2:
This is used for synchronous motor with motor encoder with absolute data to check this data.

Dependency: Refer to: p0325, p0329, p1980, p1981, p1983, r1984, r1985, r1987, p1990

p1982[0...n] Pole position identification selection / Pol-ID selection

VECTOR	**Can be changed:** T		**Access level:** 3
	Data type: Integer16	**Data set:** MDS	**Function diagram:** -
	P-Group: Motor identification	**Units group:** -	**Unit selection:** -
	Min	**Max**	**Factory setting**
	0	2	0

Description: Activates the pole position identification routine to determine the commutation offset.

Values:
0: Pole position identification de-active
1: Pole position identification active
2: Pole position identification for plausibility check

p1983 Pole position identification, test / Pol-ID test

SERVO	**Can be changed:** U, T		**Access level:** 3
	Data type: Unsigned16	**Data set:** -	**Function diagram:** -
	P-Group: Motor identification	**Units group:** -	**Unit selection:** -
	Min	**Max**	**Factory setting**
	0	1	0

Description: Start the pole position identification routine for test purposes.
p1983 = 1: Start - is automatically set to zero after being carried-out.

Dependency: Refer to: p0325, p0329, p1980, p1981, p1982, r1984, r1985, r1987, p1990

Notice: For p1983 = 1 and if the pulses are not enabled, then the function is only executed the next time that the pulses are enabled.

Note: When this test is executed, it does not influence the commutation angle.

© Siemens AG, 2005. All rights reserved

r1984 Pole position identification, angular difference / Pol-ID ang diff

SERVO, VECTOR (n/M)

Can be changed: -		**Access level:** 3
Data type: Floating Point	**Data set:** -	**Function diagram:** -
P-Group: Motor identification	**Units group:** ANGLE	**Unit selection:** -
Min	**Max**	**Factory setting**
- [°]	- [°]	- [°]

Description: Displays the angular difference between the actual electrical commutation angle and the angle determined by the pole position identification.

Dependency: Refer to: p0325, p0329, p1980, p1981, p1982, p1983, r1985, r1987, p1990

Note: When the pole position identification routine is executed several times using p1983, then using this value, then the spread of the measured values can be determined using this value. At the same position, the spread should be less than 2 degrees electrical.

r1985 Pole position identification, saturation characteristic / Pol-ID sat_curve

SERVO, VECTOR (n/M)

Can be changed: -		**Access level:** 4
Data type: Floating Point	**Data set:** -	**Function diagram:** -
P-Group: Motor identification	**Units group:** CURRENT_AC_EFF	**Unit selection:** -
Min	**Max**	**Factory setting**
- [Aeff]	- [Aeff]	- [Aeff]

Description: Displays the saturation characteristic of the pole position identification routine.

The values for the characteristic of the last saturation-based pole position identification routine are output every 1 ms in order to record signals (e.g. trace).

Dependency: Refer to: p0325, p0329, p1980, p1981, p1982, p1983, r1984, r1987, p1990

r1987 Pole position identification trigger characteristic / Pol-ID trig_curv

SERVO, VECTOR (n/M)

Can be changed: -		**Access level:** 4
Data type: Floating Point	**Data set:** -	**Function diagram:** -
P-Group: Motor identification	**Units group:** PERCENT	**Unit selection:** -
Min	**Max**	**Factory setting**
- [%]	- [%]	- [%]

Description: Displays the trigger characteristic of the pole position identification routine.

The values for the characteristic of the last pole position identification routine are output every 1 ms in order to record signals (e.g. trace).

The values for the trigger characteristic and the saturation characteristic are always output in synchronism from a time perspective.

Dependency: Refer to: p0325, p0329, p1980, p1981, p1982, p1983, r1984, r1985

Note: The following information and data can be taken from the trigger characteristic.

- the value -100% marks the angle at the start of the measurement.
- the value +100 % marks the commutation angle determined from the pole position identification routine.

p1990 Angular commutation offset, commissioning support / Ang_com offs COMM

SERVO

Can be changed: U, T		**Access level:** 3
Data type: Unsigned16	**Data set:** -	**Function diagram:** -
P-Group: Motor identification	**Units group:** -	**Unit selection:** -
Min	**Max**	**Factory setting**
0	1	0

Description: Activates the commissioning help to determine the angular commutation offset for the active motor. This function can be started when commissioning a build-in motor for the first time or after the encoder has been replaced.

p1990 = 1: Activates the routine to determine the angular commutation offset

Alarm A07971 is output while the angular commutation offset is being determined.

p1990 is automatically set to 0 after the angular commutation offset has been determined.

© Siemens AG, 2005. All rights reserved

Dependency: Refer to: p0325, p0329, p1980, p1981, p1982, p1983, r1984, r1985, r1987
Refer to: A07971

Notice: For p1990 = 1 and with the pulses not enabled, the function is only executed the next time that the pulses are enabled.

Note: For motor encoders with zero mark, the following applies:
Before activation, the motor must be moved over the zero mark (either in sensorless operation or manually).
If fault F07414 is present, the following applies:
First set p1990 to 1, then acknowledge the fault and then issue the enable signals.
The following generally applies:
This function provides a result that is suitable to operate the motor. A better result can be achieved by operating under no-load conditions at a speed > p1752 (operation with encoder) or p1755 (sensorless operation) and transferring from r1778 into p0431. As an alternative, the average value can be determined from several results of the pole position identification run as test (p1983) for various electrical angles and then entered into p0431).

p1990 Encoder adjustment selection / Encod adjust sel

VECTOR

Can be changed: T		**Access level:** 2
Data type: Integer16	**Data set:** -	**Function diagram:** -
P-Group: Motor identification	**Units group:** -	**Unit selection:** -
Min	**Max**	**Factory setting**
0	2	0

Description: Setting to active the automatic encoder adjustment.
With p1990 = 1, the angular commutation offset is saved in p0431.
With p1990 = 2, the adjustment is checked, for deviations of greater than 6 degrees electrical, fault F07413 is issued.

Values:
0: Encoder adjustment de-activated
1: Enc adjust. active
2: Check encoder adjustment

Dependency: In the simulation mode, the parameter cannot be written into.
Refer to: p0431, p1272

Caution! When the encoder is being adjusted, the motor must be operated without a load - and if a motor holding brake is being used, this must be opened.

Note: p1990 is automatically set to 0 after the encoder has been adjusted.

p1991[0...n] Motor changeover, angular commutation correction / Ang_com corr

SERVO, VECTOR

Can be changed: T		**Access level:** 3
Data type: Floating Point	**Data set:** MDS	**Function diagram:** -
P-Group: -	**Units group:** ANGLE	**Unit selection:** -
Min	**Max**	**Factory setting**
-180 [°]	180 [°]	0 [°]

Description: Sets the angle that is added to the commutating angle.

Caution! If the angular correction is not correctly set, when changing over and with closed-loop torque control, the motor can accelerate to high speeds in spite of the fact that a setpoint of zero has been entered.

Note: When changing-over between star and delta operation, 0° (motor data set for star operation) or 30/-30 ° (motor data set for delta operation) is set.

© Siemens AG, 2005. All rights reserved

r1992 Pole position identification diagnostics / Pol-ID diagn

SERVO

Can be changed: -
Access level: 3
Data type: Unsigned16
Data set: -
Function diagram: -
P-Group: -
Units group: -
Unit selection: -

Min	Max	Factory setting
-	-	-

Description: Displays diagnostics information for the pole position identification routine.

Bit field:

Bit	Signal name	0 signal	1 signal	FP
00	Critical encoder fault occurred	No	Yes	-
02	Encoder parking active	No	Yes	-
07	Pole position identification for encoder carried-out	No	Yes	-
08	Fine synchronization carried-out	No	Yes	-
09	Coarse synchronization carried-out	No	Yes	-
10	Commutation information available	No	Yes	-
11	Speed information available	No	Yes	-
12	Position information available	No	Yes	-
15	Zero mark passed	No	Yes	-

p1993[0...n] Pole position identification current, motion-based / Pol-ID I motion

SERVO

Can be changed: U, T
Access level: 3
Data type: Floating Point
Data set: MDS
Function diagram: -
P-Group: Motor identification
Units group: CURRENT_AC_EFF
Unit selection: -

Min	Max	Factory setting
0.00 [Aeff]	20000.00 [Aeff]	0.00 [Aeff]

Description: Sets the current when executing the motion-based pole position identification.
Dependency: Refer to: p1980, p1982, p1994

p1994[0...n] Pole position identification rise time, motion-based / Pol-ID T motion

SERVO

Can be changed: U, T
Access level: 3
Data type: Floating Point
Data set: MDS
Function diagram: -
P-Group: Motor identification
Units group: TIME_M3
Unit selection: -

Min	Max	Factory setting
0 [ms]	2500 [ms]	100 [ms]

Description: Sets the rise time of the current when executing the motion-based pole position identification.
Dependency: Refer to: p1980, p1982, p1993

p1995[0...n] Pole position identification gain, motion-based / Pol-ID kp motion

SERVO

Can be changed: U, T
Access level: 3
Data type: Floating Point
Data set: MDS
Function diagram: -
P-Group: Motor identification
Units group: GAIN_SPEED_CTRL
Unit selection: -

Min	Max	Factory setting
0.000 [Nms/rad]	999999.000 [Nms/rad]	0.300 [Nms/rad]

Description: Sets the gain when executing the motion-based pole position identification.

© Siemens AG, 2005. All rights reserved

p1995[0...n] Pole position identification gain, motion-based / Pol-ID kp motion

SERVO (Lin)

Can be changed: U, T		**Access level:** 3
Data type: Floating Point	**Data set:** MDS	**Function diagram:** -
P-Group: Motor identification	**Units group:** GAIN_SPEED_CTRL_LIN	**Unit selection:** -
Min	**Max**	**Factory setting**
0.000 [Ns/m]	999999.000 [Ns/m]	10.000 [Ns/m]

Description: Sets the gain when executing the motion-based pole position identification.

p1996[0...n] Pole position identification, integral action time, motion-based / Pol-ID Tn motion

SERVO

Can be changed: U, T		**Access level:** 3
Data type: Floating Point	**Data set:** MDS	**Function diagram:** -
P-Group: Motor identification	**Units group:** TIME_M3	**Unit selection:** -
Min	**Max**	**Factory setting**
1.0 [ms]	500.0 [ms]	2.0 [ms]

Description: Sets the integral action time when executing the motion-based pole position identification.

p1997[0...n] Pole position identification, smoothing time, motion-based / Pol-ID Tg motion

SERVO

Can be changed: U, T		**Access level:** 3
Data type: Floating Point	**Data set:** MDS	**Function diagram:** -
P-Group: Motor identification	**Units group:** TIME_M3	**Unit selection:** -
Min	**Max**	**Factory setting**
0.0 [ms]	50.0 [ms]	0.0 [ms]

Description: Sets the smoothing time when executing the motion-based pole position identification.

p2000 Reference frequency / Ref freq

A_INF, B_INF, S_INF

Can be changed: T		**Access level:** 2
Data type: Floating Point	**Data set:** -	**Function diagram:** -
P-Group: Communications	**Units group:** FREQUENCY	**Unit selection:** -
Min	**Max**	**Factory setting**
0.10 [Hz]	1000.00 [Hz]	50.00 [Hz]

Description: Sets the reference quantity for the frequency.
All frequencies specified as relative value are referred to this reference quantity.
The reference quantity in this parameter corresponds to 100% or 4000 hex or 4000 0000 hex.
The following applies: Reference frequency (in Hz).

p2000 Reference speed reference frequency / Ref_n Ref_f

SERVO, TM41, VECTOR

Can be changed: T		**Access level:** 2
Data type: Floating Point	**Data set:** -	**Function diagram:** -
P-Group: Communications	**Units group:** SPEED_ROT	**Unit selection:** -
Min	**Max**	**Factory setting**
6.00 [1/min]	210000.00 [1/min]	3000.00 [1/min]

Description: Sets the reference quantity for speed/velocity and frequency.
All speeds/velocities or frequencies specified as relative value are referred to this reference quantity.
The reference quantity in this parameter corresponds to 100% or 4000 hex or 4000 0000 hex.
The following applies: Reference frequency (in Hz) = reference speed/velocity (in (RPM) / 60)

Dependency: Refer to: p2001, p2002, p2003, r2004

© Siemens AG, 2005. All rights reserved

Note: If a BICO interconnection is established between different physical quantities, then the particular reference quantities are used as internal conversion factor.

Example 1:

The signal of an analog input (e.g. r4055[0]) is connected to a speed setpoint (e.g. p1070[0]). The actual percentage input value is cyclically converted into the absolute speed setpoint using the reference speed (p2000).

Example 2:

The setpoint from PROFIBUS (r2050[1]) is connected to a speed setpoint (e.g. p1070[0]). The current input value is cyclically converted into a percentage value via the pre-specified normalization 4000H. This percentage value is converted to the absolute speed setpoint via reference speed (p2000).

p2000 Reference velocity, reference frequency / Ref_n Ref_f

SERVO (Lin)

Can be changed: T		**Access level:** 2
Data type: Floating Point	**Data set:** -	**Function diagram:** -
P-Group: Communications	**Units group:** SPEED_LIN_METRIC_P3	**Unit selection:** -
Min	**Max**	**Factory setting**
0.60 [m/min]	600.00 [m/min]	120.00 [m/min]

Description: Sets the reference quantity for speed/velocity and frequency.

All speeds/velocities or frequencies specified as relative value are referred to this reference quantity.

The reference quantity in this parameter corresponds to 100% or 4000 hex or 4000 0000 hex.

The following applies: Reference frequency (in Hz) = reference speed/velocity (in (RPM) / 60)

Dependency: Refer to: p2001, p2002, p2003, r2004

Note: If a BICO interconnection is established between different physical quantities, then the particular reference quantities are used as internal conversion factor.

Example 1:

The signal of an analog input (e.g. r4055[0]) is connected to a speed setpoint (e.g. p1070[0]). The actual percentage input value is cyclically converted into the absolute speed setpoint using the reference speed (p2000).

Example 2:

The setpoint from PROFIBUS (r2050[1]) is connected to a speed setpoint (e.g. p1070[0]). The current input value is cyclically converted into a percentage value via the pre-specified normalization 4000H. This percentage value is converted to the absolute speed setpoint via reference speed (p2000).

p2001 Reference voltage / Reference voltage

A_INF, B_INF, SERVO, S_INF, TM41, VECTOR

Can be changed: T		**Access level:** 3
Data type: Floating Point	**Data set:** -	**Function diagram:** -
P-Group: Communications	**Units group:** VOLTAGE_AC_EFF	**Unit selection:** -
Min	**Max**	**Factory setting**
10.0 [Veff]	10000.0 [Veff]	1000.0 [Veff]

Description: Sets the reference quantity for voltages.

All voltages specified as relative value are referred to this reference quantity.

The reference quantity in this parameter corresponds to 100% or 4000 hex or 4000 0000 hex.

Note: If a BICO interconnection is established between different physical quantities, then the particular reference quantities are used as internal conversion factor.

For infeed units, the parameterized device supply voltage (p0210) is pre-assigned as the reference quantity.

Example:

The actual value of the DC link voltage (r0070) is connected to a test socket (e.g. p0771[0]). The actual voltage value is cyclically converted into a percentage of the reference voltage (p2001) and output according to the parameterized scaling.

© Siemens AG, 2005. All rights reserved

p2002 Reference current / Reference current

A_INF, B_INF, SERVO, S_INF, TM41, VECTOR

Can be changed: T		**Access level:** 3
Data type: Floating Point	**Data set:** -	**Function diagram:** -
P-Group: Communications	**Units group:** CURRENT_AC_EFF	**Unit selection:** -
Min	**Max**	**Factory setting**
0.10 [Aeff]	10000.00 [Aeff]	100.00 [Aeff]

Description: Sets the reference quantity for currents.

All currents specified as relative value are referred to this reference quantity.

The reference quantity in this parameter corresponds to 100% or 4000 hex or 4000 0000 hex.

Note: If a BICO interconnection is established between different physical quantities, then the particular reference quantities are used as internal conversion factor.

For infeed units, the rated line current, that is obtained from the rated power and parameterized rated line supply voltage (p2002 = r0206 / p0210 / 1.73) is pre-assigned as the reference quantity.

Example:

The actual value of a phase current (r0069[0]) is connected to a test socket (e.g. p0771[0]). The actual current value is cyclically converted into a percentage of the reference current (p2002) and output according to the parameterized scaling.

p2003 Reference torque / Reference torque

SERVO, TM41, VECTOR

Can be changed: T		**Access level:** 3
Data type: Floating Point	**Data set:** -	**Function diagram:** -
P-Group: Communications	**Units group:** TORQUE	**Unit selection:** -
Min	**Max**	**Factory setting**
0.00 [Nm]	1000000.00 [Nm]	1.00 [Nm]

Description: Sets the reference quantity for torques/forces.

All torques/forces specified as relative value are referred to this reference quantity.

The reference quantity in this parameter corresponds to 100% or 4000 hex or 4000 0000 hex.

Note: If a BICO interconnection is established between different physical quantities, then the particular reference quantities are used as internal conversion factor.

Example:

The actual value of the total torque (r0079[0]) is connected to a test socket (e.g. p0771[0]). The actual torque is cyclically converted into a percentage of the reference torque (p2003) and output according to the parameterized scaling.

p2003 Reference force / Reference torque

SERVO (Lin)

Can be changed: T		**Access level:** 3
Data type: Floating Point	**Data set:** -	**Function diagram:** -
P-Group: Communications	**Units group:** FORCE	**Unit selection:** -
Min	**Max**	**Factory setting**
0.00 [N]	1000000.00 [N]	100.00 [N]

Description: Sets the reference quantity for torques/forces.

All torques/forces specified as relative value are referred to this reference quantity.

The reference quantity in this parameter corresponds to 100% or 4000 hex or 4000 0000 hex.

Note: If a BICO interconnection is established between different physical quantities, then the particular reference quantities are used as internal conversion factor.

Example:

The actual value of the total torque (r0079[0]) is connected to a test socket (e.g. p0771[0]). The actual torque is cyclically converted into a percentage of the reference torque (p2003) and output according to the parameterized scaling.

© Siemens AG, 2005. All rights reserved

r2004 Reference power / Reference power

A_INF, B_INF, SERVO, S_INF, TM41, VECTOR

Can be changed: -
Access level: 3
Data type: Floating Point
Data set: -
Function diagram: -
P-Group: Communications
Units group: POWER_P3
Unit selection: -

Min	Max	Factory setting
- [kW]	- [kW]	- [kW]

Description: Displays the reference quantity for power ratings.
All power ratings specified as relative value are referred to this reference quantity.
The reference quantity in this parameter corresponds to 100% or 4000 hex or 4000 0000 hex.

Dependency: This value is calculated as voltage x current for the infeed and as torque x speed for closed-loop controls.
Refer to: p2000, p2001, p2002, p2003

Note: If a BICO interconnection is established between different physical quantities, then the particular reference quantities are used as internal conversion factor.
The reference power is calculated as follows:
- 2 * Pi * reference speed / 60 * reference torque (motor)
- reference voltage * reference current * root(3) (infeed)

r2032 Master control, control word effective / PcCtrl STW eff

A_INF, B_INF, S_INF

Can be changed: -
Access level: 2
Data type: Unsigned16
Data set: -
Function diagram: -
P-Group: Displays, signals
Units group: -
Unit selection: -

Min	Max	Factory setting
-	-	-

Description: Displays the effective control word 1 (STW1) of the drive for the master control.

Bit field:

Bit	Signal name	0 signal	1 signal	FP
00	ON/OFF1	No	Yes	-
01	OC / OFF2	No	Yes	-
03	Enable operation	No	Yes	-
07	Acknowledge fault	No	Yes	-
10	Master ctrl by PLC	No	Yes	-

Note: The master control is used from the commissioning software (drive control panel) and from the Advanced Operator Panel (AOP, LOCAL mode).

r2032 Master control, control word effective / PcCtrl STW eff

SERVO, VECTOR

Can be changed: -
Access level: 2
Data type: Unsigned16
Data set: -
Function diagram: -
P-Group: Displays, signals
Units group: -
Unit selection: -

Min	Max	Factory setting
-	-	-

Description: Displays the effective control word 1 (STW1) of the drive for the master control.

Bit field:

Bit	Signal name	0 signal	1 signal	FP
00	ON/OFF1	No	Yes	-
01	OC / OFF2	No	Yes	-
02	OC / OFF3	No	Yes	-
03	Enable operation	No	Yes	-
04	Enables the ramp-function generator	No	Yes	-
05	Start ramp-function generator	No	Yes	-
06	Enable speed setpoint	No	Yes	-
07	Acknowledge fault	No	Yes	-
08	Jog bit 0	No	Yes	3030
09	Jog bit 1	No	Yes	3030
10	Master ctrl by PLC	No	Yes	-

© Siemens AG, 2005. All rights reserved

Note: The master control is used from the commissioning software (drive control panel) and from the Advanced Operator Panel (AOP, LOCAL mode).

p2037 PROFIBUS STW1.10 = 0 mode / PB STW1.10=0 mode

SERVO, TM41, VECTOR

Can be changed: T		**Access level:** 3
Data type: Integer16	**Data set:** -	**Function diagram:** -
P-Group: Communications	**Units group:** -	**Unit selection:** -
Min	**Max**	**Factory setting**
0	2	0

Description: Sets the processing mode for PROFIBUS STW1.10 "Control from PLC".

Generally, control world 1 is received with the first PROFIBUS receive word (PZD1) (this is in conformance to the PROFIdrive profile). The behavior of STW1.10 = 0 corresponds to that of the PROFIdrive profile. For other applications that deviate from this, the behavior can be adapted using this particular parameter.

Values:
0: Freeze setpoints and continue to process sign-of-life
1: Freeze setpoints and sign-of-life
2: Setpoints are not frozen

Note: If the STW1 is not transferred according to the PROFIdrive with PZD1 (with bit 10 "control by the PLC"), then p2037 should be set to 2.

p2038 PROFIBUS STW/ZSW interface mode / PB STW/ZSW interf

SERVO, VECTOR

Can be changed: T		**Access level:** 3
Data type: Integer16	**Data set:** -	**Function diagram:** -
P-Group: Communications	**Units group:** -	**Unit selection:** -
Min	**Max**	**Factory setting**
0	2	0

Description: Sets the interface mode of the PROFIBUS control and status words.

When selecting a telegram via p0922, this parameter influences the device-specific assignment of the bits in the control and status words.

Values:
0: SINAMICS
1: SIMODRIVE 611 universal
2: VIK-NAMUR

Dependency: Refer to: p0922

Note: For p0922 = 100 ... 199, p2038 is automatically set to 1 and p2038 can no longer be changed. This means that for these telegrams, the "SIMODRIVE 611 universal" interface mode is set and cannot be changed.

p2039 Select debug monitor interface / Sel. debug monitor

CU_S

Can be changed: U, T		**Access level:** 4
Data type: Unsigned16	**Data set:** -	**Function diagram:** -
P-Group: Communications	**Units group:** -	**Unit selection:** -
Min	**Max**	**Factory setting**
0	1	0

Description: The serial interface for the debug monitor is COM1 (X140) or COM2 (internal).

Value = 0: COM2 (internal)

Value = 1: COM1 (X140), PPI is de-activated

Note: A change only becomes effective after a POWER ON.

© Siemens AG, 2005. All rights reserved

p2041[0...4] PROFIBUS detail settings / PROFIBUS detail

CU_S	**Can be changed:** U, T		**Access level:** 4
	Data type: Unsigned16	**Data set:** -	**Function diagram:** -
	P-Group: Communications	**Units group:** -	**Unit selection:** -
	Min	**Max**	**Factory setting**
	0	65535	0

p2042 PROFIBUS Ident Number / PB Ident No.

CU_S	**Can be changed:** C1(1)		**Access level:** 3
	Data type: Integer16	**Data set:** -	**Function diagram:** -
	P-Group: Communications	**Units group:** -	**Unit selection:** -
	Min	**Max**	**Factory setting**
	0	1	0

Description: Sets the PROFIBUS Ident Number (PNO-ID).

SINAMICS can be operated with various identities on PROFIBUS. This allows the use of a PROFIBUS GSD that is independent of the device (e.g. PROFIdrive VIK-NAMUR with Ident Number 3AA0 hex).

Values:
0: SINAMICS S/G
1: VIK-NAMUR

Note: A new setting only becomes effective after POWER ON, reset or download.

r2043 BO: PROFIBUS PZD status / PB PZD state

CU_S	**Can be changed:** -		**Access level:** 3
	Data type: Unsigned8	**Data set:** -	**Function diagram:** 2410
	P-Group: Communications	**Units group:** -	**Unit selection:** -
	Min	**Max**	**Factory setting**
	-	-	-

Description: Displays the PROFIBUS PZD state.

Bit field:

Bit	Signal name	0 signal	1 signal	FP
00	Setpoint failure	No	Yes	-

Dependency: Refer to: p2044

Note: When using the "setpoint failure" signal, PROFIBUS can be monitored and an application-specific response triggered when the setpoint fails.

p2044 PROFIBUS fault delay / PB fault delay

A_INF, B_INF, SERVO, S_INF, TM41, VECTOR	**Can be changed:** U, T		**Access level:** 3
	Data type: Floating Point	**Data set:** -	**Function diagram:** 2410
	P-Group: Communications	**Units group:** TIME	**Unit selection:** -
	Min	**Max**	**Factory setting**
	0 [s]	100 [s]	0 [s]

Description: Sets the delay time to initiate fault F01910 after a PROFIBUS setpoint failure.

The time until the fault is initiated can be used by the application. This means that is is possible to respond to the failure while the drive is still operational (e.g. emergency retraction).

Dependency: Refer to: r2043
Refer to: F01910

© Siemens AG, 2005. All rights reserved

p2045 CI: Clock synchronous PROFIBUS signal source for master sign-of-life / PB S_src mast SoL

CU_S, SERVO, TM41

Can be changed: T		**Access level:** 3
Data type: Unsigned32	**Data set:** -	**Function diagram:** 2444
P-Group: Communications	**Units group:** -	**Unit selection:** -
Min	**Max**	**Factory setting**
-	-	0

Description: Connector input for the sign-of-life of the clock synchronous PROFIBUS master.
The sign-of-life is expected at bits 12 to 15. Bits 0 to 11 are not evaluated.
The sign-of-life signal is normally received in PZD4 (control word 2) from the PROFIBUS master.

Dependency: Refer to: p0925, r2065

r2050[0...4] CO: PROFIBUS PZD receive word / PB PZD recv word

A_INF, B_INF, CU_S, S_INF, TB30, TM15DI/DO, TM31

Can be changed: -		**Access level:** 3
Data type: Integer16	**Data set:** -	**Function diagram:** -
P-Group: Communications	**Units group:** -	**Unit selection:** -
Min	**Max**	**Factory setting**
-	-	-

Description: Connector output to interconnect PZD (setpoints) with word format received from the PROFIBUS master.

Index:
[0] = PZD 1
[1] = PZD 2
[2] = PZD 3
[3] = PZD 4
[4] = PZD 5

r2050[0...15] CO: PROFIBUS PZD receive word / PB PZD recv word

SERVO, TM41, VECTOR

Can be changed: -		**Access level:** 3
Data type: Integer16	**Data set:** -	**Function diagram:** 2440, 2460
P-Group: Communications	**Units group:** -	**Unit selection:** -
Min	**Max**	**Factory setting**
-	-	-

Description: Connector output to interconnect PZD (setpoints) with word format received from the PROFIBUS master.

Index:
[0] = PZD 1
[1] = PZD 2
[2] = PZD 3
[3] = PZD 4
[4] = PZD 5
[5] = PZD 6
[6] = PZD 7
[7] = PZD 8
[8] = PZD 9
[9] = PZD 10
[10] = PZD 11
[11] = PZD 12
[12] = PZD 13
[13] = PZD 14
[14] = PZD 15
[15] = PZD 16

Dependency: Refer to: r2060

© Siemens AG, 2005. All rights reserved

p2051[0...6] CI: PROFIBUS PZD send word / PB PZD send word

CU_S	**Can be changed:** U, T		**Access level:** 3
	Data type: Unsigned32	**Data set:** -	**Function diagram:** -
	P-Group: Communications	**Units group:** -	**Unit selection:** -
	Min	**Max**	**Factory setting**
	-	-	0

Description: Selects the PZD (actual values) with word format to be sent to the PROFIBUS master.

Index:
[0] = PZD 1
[1] = PZD 2
[2] = PZD 3
[3] = PZD 4
[4] = PZD 5
[5] = PZD 6
[6] = PZD 7

p2051[0...4] CI: PROFIBUS PZD send word / PB PZD send word

A_INF, B_INF, S_INF, TB30, TM15DI/DO, TM31	**Can be changed:** U, T		**Access level:** 3
	Data type: Unsigned32	**Data set:** -	**Function diagram:** -
	P-Group: Communications	**Units group:** -	**Unit selection:** -
	Min	**Max**	**Factory setting**
	-	-	0

Description: Selects the PZD (actual values) with word format to be sent to the PROFIBUS master.

Index:
[0] = PZD 1
[1] = PZD 2
[2] = PZD 3
[3] = PZD 4
[4] = PZD 5

p2051[0...18] CI: PROFIBUS PZD send word / PB PZD send word

SERVO, TM41, VECTOR	**Can be changed:** U, T		**Access level:** 3
	Data type: Unsigned32	**Data set:** -	**Function diagram:** 2470
	P-Group: Communications	**Units group:** -	**Unit selection:** -
	Min	**Max**	**Factory setting**
	-	-	0

Description: Selects the PZD (actual values) with word format to be sent to the PROFIBUS master.

Index:
[0] = PZD 1
[1] = PZD 2
[2] = PZD 3
[3] = PZD 4
[4] = PZD 5
[5] = PZD 6
[6] = PZD 7
[7] = PZD 8
[8] = PZD 9
[9] = PZD 10
[10] = PZD 11
[11] = PZD 12
[12] = PZD 13
[13] = PZD 14
[14] = PZD 15
[15] = PZD 16
[16] = PZD 17
[17] = PZD 18
[18] = PZD 19

Dependency: Refer to: p2061

© Siemens AG, 2005. All rights reserved

r2053[0...6] PROFIBUS diagnostics send PZD word / PB diag send word

CU_S	**Can be changed:** -		**Access level:** 3
	Data type: Unsigned16	**Data set:** -	**Function diagram:** -
	P-Group: Communications	**Units group:** -	**Unit selection:** -
	Min	**Max**	**Factory setting**
	-	-	-

Description: Displays the PZD (actual values) with word format sent to the PROFIBUS master.

Index:
[0] = PZD 1
[1] = PZD 2
[2] = PZD 3
[3] = PZD 4
[4] = PZD 5
[5] = PZD 6
[6] = PZD 7

Bit field:

Bit	Signal name	0 signal	1 signal	FP
00	Bit 0	Off	On	-
01	Bit 1	Off	On	-
02	Bit 2	Off	On	-
03	Bit 3	Off	On	-
04	Bit 4	Off	On	-
05	Bit 5	Off	On	-
06	Bit 6	Off	On	-
07	Bit 7	Off	On	-
08	Bit 8	Off	On	-
09	Bit 9	Off	On	-
10	Bit 10	Off	On	-
11	Bit 11	Off	On	-
12	Bit 12	Off	On	-
13	Bit 13	Off	On	-
14	Bit 14	Off	On	-
15	Bit 15	Off	On	-

© Siemens AG, 2005. All rights reserved

r2053[0...4] PROFIBUS diagnostics send PZD word / PB diag send word

A_INF, B_INF, S_INF, TB30, TM15DI/DO, TM31

Can be changed: -		**Access level:** 3
Data type: Unsigned16	**Data set:** -	**Function diagram:** -
P-Group: Communications	**Units group:** -	**Unit selection:** -
Min	**Max**	**Factory setting**
-	-	-

Description: Displays the PZD (actual values) with word format sent to the PROFIBUS master.

Index:
[0] = PZD 1
[1] = PZD 2
[2] = PZD 3
[3] = PZD 4
[4] = PZD 5

Bit field:

Bit	Signal name	0 signal	1 signal	FP
00	Bit 0	Off	On	-
01	Bit 1	Off	On	-
02	Bit 2	Off	On	-
03	Bit 3	Off	On	-
04	Bit 4	Off	On	-
05	Bit 5	Off	On	-
06	Bit 6	Off	On	-
07	Bit 7	Off	On	-
08	Bit 8	Off	On	-
09	Bit 9	Off	On	-
10	Bit 10	Off	On	-
11	Bit 11	Off	On	-
12	Bit 12	Off	On	-
13	Bit 13	Off	On	-
14	Bit 14	Off	On	-
15	Bit 15	Off	On	-

© Siemens AG, 2005. All rights reserved

r2053[0...18] PROFIBUS diagnostics send PZD word / PB diag send word

SERVO, TM41, VECTOR	**Can be changed:** -		**Access level:** 3
	Data type: Unsigned16	**Data set:** -	**Function diagram:** 2450, 2470
	P-Group: Communications	**Units group:** -	**Unit selection:** -
	Min	**Max**	**Factory setting**
	-	-	-

Description: Displays the PZD (actual values) with word format sent to the PROFIBUS master.

Index:
[0] = PZD 1
[1] = PZD 2
[2] = PZD 3
[3] = PZD 4
[4] = PZD 5
[5] = PZD 6
[6] = PZD 7
[7] = PZD 8
[8] = PZD 9
[9] = PZD 10
[10] = PZD 11
[11] = PZD 12
[12] = PZD 13
[13] = PZD 14
[14] = PZD 15
[15] = PZD 16
[16] = PZD 17
[17] = PZD 18
[18] = PZD 19

Bit field:

Bit	Signal name	0 signal	1 signal	FP
00	Bit 0	Off	On	-
01	Bit 1	Off	On	-
02	Bit 2	Off	On	-
03	Bit 3	Off	On	-
04	Bit 4	Off	On	-
05	Bit 5	Off	On	-
06	Bit 6	Off	On	-
07	Bit 7	Off	On	-
08	Bit 8	Off	On	-
09	Bit 9	Off	On	-
10	Bit 10	Off	On	-
11	Bit 11	Off	On	-
12	Bit 12	Off	On	-
13	Bit 13	Off	On	-
14	Bit 14	Off	On	-
15	Bit 15	Off	On	-

Dependency: Refer to: p2051, p2061

© Siemens AG, 2005. All rights reserved

r2054 PROFIBUS status / PB status

CU_S	**Can be changed:** -		**Access level:** 3
	Data type: Integer16	**Data set:** -	**Function diagram:** 2410
	P-Group: Communications	**Units group:** -	**Unit selection:** -
	Min	**Max**	**Factory setting**
	-	-	-

Description: Status display for the PROFIBUS interface.

Values:
0: Off
1: No connection (baud rate search)
2: Connection O. K. (baud rate found)
3: Cyclic connection with master (data exchange)
4: Cyclic data O. K.

Note:
Re r2054 = 3:
In state 3 (the LED flashes green), a cyclic connection has been established to the PROFIBUS master; however, one of the following prerequisites is missing for cyclic operation:
- No setpoints are being received as the PROFIBUS master is in the STOP condition.

Only for clock-cycle synchronous operation, the following applies:
- The drive is not in synchronism as the global control (GC) has an error.

Re r2054 = 4:
In the status 4 (LED green), the cyclic connection to the PROFIBUS master has been established and setpoints are being received. The clock cycle synchronization is OK, the global control (GC) is error-free.
This state does not provide any statement regarding the quality of the clock cycle synchronous sign-of-life characters on the drive objects.

r2055[0...2] PROFIBUS diagnostics standard / PB diag standard

CU_S	**Can be changed:** -		**Access level:** 3
	Data type: Unsigned16	**Data set:** -	**Function diagram:** 2410
	P-Group: Communications	**Units group:** -	**Unit selection:** -
	Min	**Max**	**Factory setting**
	-	-	-

Description: Diagnostics display for the PROFIBUS interface.

Index:
[0] = Master bus address
[1] = Master input total length bytes
[2] = Master output total length bytes

r2056[0...19] PROFIBUS diagnostics expert / PB diag experts

CU_S	**Can be changed:** -		**Access level:** 4
	Data type: Unsigned16	**Data set:** -	**Function diagram:** -
	P-Group: Communications	**Units group:** -	**Unit selection:** -
	Min	**Max**	**Factory setting**
	-	-	-

r2057 PROFIBUS diagnostics address switch / PB diag address

CU_S	**Can be changed:** -		**Access level:** 3
	Data type: Unsigned16	**Data set:** -	**Function diagram:** 2410
	P-Group: Communications	**Units group:** -	**Unit selection:** -
	Min	**Max**	**Factory setting**
	-	-	-

Description: Displays the setting of the PROFIBUS address switch "DP ADDRESS" on the Control Unit.

Dependency: Refer to: p0918

© Siemens AG, 2005. All rights reserved

r2060[0...14] CO: PROFIBUS PZD receive double word / PB PZD recv DW

SERVO, TM41, VECTOR

Can be changed: -		**Access level:** 3
Data type: Integer32	**Data set:** -	**Function diagram:** 2440, 2460
P-Group: Communications	**Units group:** -	**Unit selection:** -
Min	**Max**	**Factory setting**
-	-	-

Description: Connector output to interconnect PZD (setpoints) with double word format received from the PROFIBUS master.

Index:
[0] = PZD 1 + 2
[1] = PZD 2 + 3
[2] = PZD 3 + 4
[3] = PZD 4 + 5
[4] = PZD 5 + 6
[5] = PZD 6 + 7
[6] = PZD 7 + 8
[7] = PZD 8 + 9
[8] = PZD 9 +10
[9] = PZD 10 + 11
[10] = PZD 11 + 12
[11] = PZD 12 + 13
[12] = PZD 13 + 14
[13] = PZD 14 + 15
[14] = PZD 15 + 16

Dependency: Refer to: r2050

p2061[0...14] CI: PROFIBUS PZD send double word / PB PZD send DW

SERVO, TM41, VECTOR

Can be changed: U, T		**Access level:** 3
Data type: Unsigned32	**Data set:** -	**Function diagram:** 2470
P-Group: Communications	**Units group:** -	**Unit selection:** -
Min	**Max**	**Factory setting**
-	-	0

Description: Selects the PZD (actual values) with double word format to be sent to the PROFIBUS master.

Index:
[0] = PZD 1 + 2
[1] = PZD 2 + 3
[2] = PZD 3 + 4
[3] = PZD 4 + 5
[4] = PZD 5 + 6
[5] = PZD 6 + 7
[6] = PZD 7 + 8
[7] = PZD 8 + 9
[8] = PZD 9 +10
[9] = PZD 10 + 11
[10] = PZD 11 + 12
[11] = PZD 12 + 13
[12] = PZD 13 + 14
[13] = PZD 14 + 15
[14] = PZD 15 + 16

Dependency: Refer to: p2051

© Siemens AG, 2005. All rights reserved

r2063[0...14] PROFIBUS diagnostics PZD send double word / PB diag send DW

SERVO, TM41, VECTOR

Can be changed: -		**Access level:** 3
Data type: Unsigned32	**Data set:** -	**Function diagram:** 2450, 2470
P-Group: Communications	**Units group:** -	**Unit selection:** -
Min	**Max**	**Factory setting**
-	-	-

Description: Displays the PZD (actual values) with double word format sent to the PROFIBUS master.

Index:
[0] = PZD 1 + 2
[1] = PZD 2 + 3
[2] = PZD 3 + 4
[3] = PZD 4 + 5
[4] = PZD 5 + 6
[5] = PZD 6 + 7
[6] = PZD 7 + 8
[7] = PZD 8 + 9
[8] = PZD 9 +10
[9] = PZD 10 + 11
[10] = PZD 11 + 12
[11] = PZD 12 + 13
[12] = PZD 13 + 14
[13] = PZD 14 + 15
[14] = PZD 15 + 16

Bit field:

Bit	Signal name	0 signal	1 signal	FP
00	Bit 0	Off	On	-
01	Bit 1	Off	On	-
02	Bit 2	Off	On	-
03	Bit 3	Off	On	-
04	Bit 4	Off	On	-
05	Bit 5	Off	On	-
06	Bit 6	Off	On	-
07	Bit 7	Off	On	-
08	Bit 8	Off	On	-
09	Bit 9	Off	On	-
10	Bit 10	Off	On	-
11	Bit 11	Off	On	-
12	Bit 12	Off	On	-
13	Bit 13	Off	On	-
14	Bit 14	Off	On	-
15	Bit 15	Off	On	-
16	Bit 16	Off	On	-
17	Bit 17	Off	On	-
18	Bit 18	Off	On	-
19	Bit 19	Off	On	-
20	Bit 20	Off	On	-
21	Bit 21	Off	On	-
22	Bit 22	Off	On	-
23	Bit 23	Off	On	-
24	Bit 24	Off	On	-
25	Bit 25	Off	On	-
26	Bit 26	Off	On	-
27	Bit 27	Off	On	-
28	Bit 28	Off	On	-
29	Bit 29	Off	On	-
30	Bit 30	Off	On	-
31	Bit 31	Off	On	-

© Siemens AG, 2005. All rights reserved

r2064[0...7] PROFIBUS diagnostics clock synchronous mode / PB diag clock sync

CU_S

Can be changed: -
Access level: 3
Data type: Integer32
Data set: -
Function diagram: 2410
P-Group: Communications
Units group: -
Unit selection: -

Min	Max	Factory setting
-	-	-

Description: Displays the last parameter received from the PROFIBUS master for clock synchronism.
The parameters for clock synchronism are created when configuring the bus and are transferred at the start of cyclic operation from the PROFIBUS master to the slave.

Index:
[0] = Clock synchronous mode activated
[1] = Bus cycle time (Tdp) [µs]
[2] = Master cycle time (Tmapc) [µs]
[3] = Instant of actual value acquisition (Ti) [µs]
[4] = Instant of setpoint acquisition (To) [µs]
[5] = Data exchange interval (Tdx) [µs]
[6] = PLL window (Tpll-w) [1/12 µs]
[7] = PLL delay time (Tpll-d) [1/12 µs]

r2065 PROFIBUS diagnostics master sign-of-life / PB diag master SoL

CU_S, SERVO, TM41

Can be changed: -
Access level: 3
Data type: Unsigned16
Data set: -
Function diagram: 2410
P-Group: Communications
Units group: -
Unit selection: -

Min	Max	Factory setting
-	-	-

Description: Displays how often the sign-of-life from the clock synchronous PROFIBUS master failed. An appropriate fault is output when the tolerance, specified in p0925, is exceeded.

Dependency: Refer to: F01912

r2075[0...4] PROFIBUS diagnostics telegram offset PZD receive / PB diag offs recv

A_INF, B_INF, CU_S, S_INF, TB30, TM15DI/DO, TM31

Can be changed: -
Access level: 3
Data type: Unsigned16
Data set: -
Function diagram: -
P-Group: Communications
Units group: -
Unit selection: -

Min	Max	Factory setting
-	-	-

Description: PZD byte offset in the PROFIBUS receive telegram (master output).

Index:
[0] = PZD 1
[1] = PZD 2
[2] = PZD 3
[3] = PZD 4
[4] = PZD 5

Note: Value range:
0 - 242: Byte offset
255: Not occupied

© Siemens AG, 2005. All rights reserved

r2075[0...15] PROFIBUS diagnostics telegram offset PZD receive / PB diag offs recv

SERVO, TM41, VECTOR

Can be changed: -		**Access level:** 3
Data type: Unsigned16	**Data set:** -	**Function diagram:** -
P-Group: Communications	**Units group:** -	**Unit selection:** -
Min	**Max**	**Factory setting**
-	-	-

Description: PZD byte offset in the PROFIBUS receive telegram (master output).

Index:
[0] = PZD 1
[1] = PZD 2
[2] = PZD 3
[3] = PZD 4
[4] = PZD 5
[5] = PZD 6
[6] = PZD 7
[7] = PZD 8
[8] = PZD 9
[9] = PZD 10
[10] = PZD 11
[11] = PZD 12
[12] = PZD 13
[13] = PZD 14
[14] = PZD 15
[15] = PZD 16

Note: Value range:
0 - 242: Byte offset
255: Not occupied

r2076[0...6] PROFIBUS PZD diagnostics telegram offset send / PB diag offs send

CU_S

Can be changed: -		**Access level:** 3
Data type: Unsigned16	**Data set:** -	**Function diagram:** -
P-Group: Communications	**Units group:** -	**Unit selection:** -
Min	**Max**	**Factory setting**
-	-	-

Description: PZD byte offset in the PROFIBUS send telegram (master input).

Index:
[0] = PZD 1
[1] = PZD 2
[2] = PZD 3
[3] = PZD 4
[4] = PZD 5
[5] = PZD 6
[6] = PZD 7

Note: Value range:
0 - 242: Byte offset
255: Not occupied

© Siemens AG, 2005. All rights reserved

r2076[0...4] PROFIBUS PZD diagnostics telegram offset send / PB diag offs send

A_INF, B_INF, S_INF, TB30, TM15DI/DO, TM31

Can be changed: -		**Access level:** 3
Data type: Unsigned16	**Data set:** -	**Function diagram:** -
P-Group: Communications	**Units group:** -	**Unit selection:** -
Min	**Max**	**Factory setting**
-	-	-

Description: PZD byte offset in the PROFIBUS send telegram (master input).

Index:
[0] = PZD 1
[1] = PZD 2
[2] = PZD 3
[3] = PZD 4
[4] = PZD 5

Note: Value range:
0 - 242: Byte offset
255: Not occupied

r2076[0...18] PROFIBUS PZD diagnostics telegram offset send / PB diag offs send

SERVO, TM41, VECTOR

Can be changed: -		**Access level:** 3
Data type: Unsigned16	**Data set:** -	**Function diagram:** -
P-Group: Communications	**Units group:** -	**Unit selection:** -
Min	**Max**	**Factory setting**
-	-	-

Description: PZD byte offset in the PROFIBUS send telegram (master input).

Index:
[0] = PZD 1
[1] = PZD 2
[2] = PZD 3
[3] = PZD 4
[4] = PZD 5
[5] = PZD 6
[6] = PZD 7
[7] = PZD 8
[8] = PZD 9
[9] = PZD 10
[10] = PZD 11
[11] = PZD 12
[12] = PZD 13
[13] = PZD 14
[14] = PZD 15
[15] = PZD 16
[16] = PZD 17
[17] = PZD 18
[18] = PZD 19

Note: Value range:
0 - 242: Byte offset
255: Not occupied

© Siemens AG, 2005. All rights reserved

p2079 PROFIBUS PZD telegram selection extended / PB PZD tlg exten.

CU_S

Can be changed: C2(1), T		**Access level:** 3
Data type: Integer16	**Data set:** -	**Function diagram:** -
P-Group: Communications	**Units group:** -	**Unit selection:** -
Min	**Max**	**Factory setting**
390	999	999

Description: Sets the send and receive telegram for PROFIBUS. Contrary to p922, a telegram can be selected using p2079 and subsequently expanded.

If, with p922, a value not equal to 999 is set, then p2079 has the same value and is inhibited. All of the interconnections contained in the telegram are inhibited. Also expansions are inhibited.

If p922 is set to 999, then p2079 can be freely set. If p2079 is also set to 999, then all of the interconnections can be set.

If p922 = 999, and with p2079, a value is set that is not equal to 999, then the interconnections contained in the telegram are inhibited, but the telegram can be expanded.

Values:
390: SIEMENS telegram 390 for the Control Unit
391: SIEMENS telegram 391 for the Control Unit
999: Free telegram configuration with BICO

p2079 PROFIBUS PZD telegram selection extended / PB PZD tlg exten.

A_INF, B_INF, S_INF

Can be changed: C2(1), T		**Access level:** 3
Data type: Integer16	**Data set:** -	**Function diagram:** -
P-Group: Communications	**Units group:** -	**Unit selection:** -
Min	**Max**	**Factory setting**
370	999	999

Description: Sets the send and receive telegram for PROFIBUS. Contrary to p922, a telegram can be selected using p2079 and subsequently expanded.

For p0922 < 999 the following applies:

p2079 has the same value and is inhibited. All of the interconnections and extensions contained in the telegram are inhibited.

For p0922 = 999 the following applies:

p2079 can be freely set. If p2079 is also set to 999, then all of the interconnections can be set.

For p0922 = 999 and p2079 < 999 the following applies:

The interconnections contained in the telegram are inhibited. However, the telegram can be extended.

Values:
370: SIEMENS telegram 370 for the infeed
999: Free telegram configuration with BICO

Dependency: Refer to: p0922

p2079 PROFIBUS PZD telegram selection extended / PB PZD tlg exten.

SERVO

Can be changed: C2(1), T		**Access level:** 3
Data type: Integer16	**Data set:** -	**Function diagram:** -
P-Group: Communications	**Units group:** -	**Unit selection:** -
Min	**Max**	**Factory setting**
2	999	999

Description: Sets the send and receive telegram for PROFIBUS. Contrary to p922, a telegram can be selected using p2079 and subsequently expanded.

For p0922 < 999 the following applies:

p2079 has the same value and is inhibited. All of the interconnections and extensions contained in the telegram are inhibited.

For p0922 = 999 the following applies:

p2079 can be freely set. If p2079 is also set to 999, then all of the interconnections can be set.

For p0922 = 999 and p2079 < 999 the following applies:

The interconnections contained in the telegram are inhibited. However, the telegram can be extended.

© Siemens AG, 2005. All rights reserved

Values:
2: Standard telegram 2
3: Standard telegram 3
4: Standard telegram 4
5: Standard telegram 5
6: Standard telegram 6
102: SIEMENS telegram 102
103: SIEMENS telegram 103
105: SIEMENS telegram 105
106: SIEMENS telegram 106
116: SIEMENS telegram 116
999: Free telegram configuration with BICO

Dependency: Refer to: p0922

p2079 PROFIBUS PZD telegram selection extended / PB PZD tlg exten.

VECTOR

Can be changed: C2(1), T		**Access level:** 3
Data type: Integer16	**Data set:** -	**Function diagram:** -
P-Group: Communications	**Units group:** -	**Unit selection:** -
Min	**Max**	**Factory setting**
1	999	999

Description: Sets the send and receive telegram for PROFIBUS. Contrary to p922, a telegram can be selected using p2079 and subsequently expanded.

For p0922 < 999 the following applies:

p2079 has the same value and is inhibited. All of the interconnections and extensions contained in the telegram are inhibited.

For p0922 = 999 the following applies:

p2079 can be freely set. If p2079 is also set to 999, then all of the interconnections can be set.

For p0922 = 999 and p2079 < 999 the following applies:

The interconnections contained in the telegram are inhibited. However, the telegram can be extended.

Values:
1: Standard telegram 1
20: VIK-NAMUR telegram 20
352: PCS7 telegram 352
999: Free telegram configuration with BICO

Dependency: Refer to: p0922

p2079 PROFIBUS PZD telegram selection extended / PB PZD tlg exten.

TM41

Can be changed: C2(1), T		**Access level:** 3
Data type: Integer16	**Data set:** -	**Function diagram:** -
P-Group: Communications	**Units group:** -	**Unit selection:** -
Min	**Max**	**Factory setting**
3	999	999

Description: Sets the send and receive telegram for PROFIBUS. Contrary to p922, a telegram can be selected using p2079 and subsequently expanded.

For p0922 < 999 the following applies:

p2079 has the same value and is inhibited. All of the interconnections and extensions contained in the telegram are inhibited.

For p0922 = 999 the following applies:

p2079 can be freely set. If p2079 is also set to 999, then all of the interconnections can be set.

For p0922 = 999 and p2079 < 999 the following applies:

The interconnections contained in the telegram are inhibited. However, the telegram can be extended.

Values:
3: Standard telegram 3
999: Free telegram configuration with BICO

Dependency: Refer to: p0922

© Siemens AG, 2005. All rights reserved

p2080[0...15] BI: PROFIBUS send status word 1 / PB STW1 bit sel.

A_INF, B_INF, CU_S, SERVO, S_INF, TB30, TM15DI/DO, TM31, TM41, VECTOR

Can be changed: U, T | **Access level:** 3
Data type: Unsigned32 | **Data set:** - | **Function diagram:** 2472
P-Group: Communications | **Units group:** - | **Unit selection:** -

Min	Max	Factory setting
-	-	0

Description: Selects bits to be sent to the PROFIBUS master. The individual bits are combined to form status word 1.

Index:
[0] = Bit 0
[1] = Bit 1
[2] = Bit 2
[3] = Bit 3
[4] = Bit 4
[5] = Bit 5
[6] = Bit 6
[7] = Bit 7
[8] = Bit 8
[9] = Bit 9
[10] = Bit 10
[11] = Bit 11
[12] = Bit 12
[13] = Bit 13
[14] = Bit 14
[15] = Bit 15

Dependency: Refer to: p2088, r2089

p2081[0...15] BI: PROFIBUS send status word 2 / PB STW2 bit sel.

A_INF, B_INF, CU_S, SERVO, S_INF, TB30, TM15DI/DO, TM31, TM41, VECTOR

Can be changed: U, T | **Access level:** 3
Data type: Unsigned32 | **Data set:** - | **Function diagram:** 2472
P-Group: Communications | **Units group:** - | **Unit selection:** -

Min	Max	Factory setting
-	-	0

Description: Selects bits to be sent to the PROFIBUS master. The individual bits are combined to form status word 2.

Index:
[0] = Bit 0
[1] = Bit 1
[2] = Bit 2
[3] = Bit 3
[4] = Bit 4
[5] = Bit 5
[6] = Bit 6
[7] = Bit 7
[8] = Bit 8
[9] = Bit 9
[10] = Bit 10
[11] = Bit 11
[12] = Bit 12
[13] = Bit 13
[14] = Bit 14
[15] = Bit 15

Dependency: Refer to: p2088, r2089

Note: When using the clock synchronous (isosynchronous) PROFIBUS with sign-of-life in status word 2, bit 12 to 15 are reserved to transfer the sign-of-life and may not be freely interconnected.

© Siemens AG, 2005. All rights reserved

p2082[0...15] BI: PROFIBUS send free status word 3 / PB ZSW3 bit sel.

A_INF, B_INF, CU_S, SERVO, S_INF, TB30, TM15DI/DO, TM31, TM41, VECTOR

Can be changed: U, T | **Access level:** 3
Data type: Unsigned32 | **Data set:** - | **Function diagram:** 2472
P-Group: Communications | **Units group:** - | **Unit selection:** -

Min	Max	Factory setting
-	-	0

Description: Selects bits to be sent to the PROFIBUS master. The individual bits are combined to form free status word 3.

Index:
[0] = Bit 0
[1] = Bit 1
[2] = Bit 2
[3] = Bit 3
[4] = Bit 4
[5] = Bit 5
[6] = Bit 6
[7] = Bit 7
[8] = Bit 8
[9] = Bit 9
[10] = Bit 10
[11] = Bit 11
[12] = Bit 12
[13] = Bit 13
[14] = Bit 14
[15] = Bit 15

Dependency: Refer to: p2088, r2089

p2083[0...15] BI: PROFIBUS send free status word 4 / PB ZSW4 bit sel.

A_INF, B_INF, CU_S, SERVO, S_INF, TB30, TM15DI/DO, TM31, TM41, VECTOR

Can be changed: U, T | **Access level:** 3
Data type: Unsigned32 | **Data set:** - | **Function diagram:** 2472
P-Group: Communications | **Units group:** - | **Unit selection:** -

Min	Max	Factory setting
-	-	0

Description: Selects bits to be sent to the PROFIBUS master. The individual bits are combined to form free status word 4.

Index:
[0] = Bit 0
[1] = Bit 1
[2] = Bit 2
[3] = Bit 3
[4] = Bit 4
[5] = Bit 5
[6] = Bit 6
[7] = Bit 7
[8] = Bit 8
[9] = Bit 9
[10] = Bit 10
[11] = Bit 11
[12] = Bit 12
[13] = Bit 13
[14] = Bit 14
[15] = Bit 15

Dependency: Refer to: p2088, r2089

© Siemens AG, 2005. All rights reserved

p2088[0...3] PROFIBUS invert status word / Invert PB ZSW

A_INF, B_INF, CU_S, SERVO, S_INF, TB30, TM15DI/DO, TM31, TM41, VECTOR

Can be changed: U, T | **Access level:** 3
Data type: Unsigned16 | **Data set:** - | **Function diagram:** 2472
P-Group: Communications | **Units group:** - | **Unit selection:** -

Min	Max	Factory setting
0000 bin	1111 1111 1111 1111 bin	0000 bin

Description: Setting to invert the individual binector inputs of the binector connector converter.

Index:
[0] = Status word 1
[1] = Status word 2
[2] = Free status word 3
[3] = Free status word 4

Bit field:

Bit	Signal name	0 signal	1 signal	FP
00	Bit 0	Not inverted	Inverted	-
01	Bit 1	Not inverted	Inverted	-
02	Bit 2	Not inverted	Inverted	-
03	Bit 3	Not inverted	Inverted	-
04	Bit 4	Not inverted	Inverted	-
05	Bit 5	Not inverted	Inverted	-
06	Bit 6	Not inverted	Inverted	-
07	Bit 7	Not inverted	Inverted	-
08	Bit 8	Not inverted	Inverted	-
09	Bit 9	Not inverted	Inverted	-
10	Bit 10	Not inverted	Inverted	-
11	Bit 11	Not inverted	Inverted	-
12	Bit 12	Not inverted	Inverted	-
13	Bit 13	Not inverted	Inverted	-
14	Bit 14	Not inverted	Inverted	-
15	Bit 15	Not inverted	Inverted	-

Dependency: Refer to: p2080, p2081, p2082, p2083, r2089

r2089[0...3] CO: PROFIBUS send status word / Send PB ZSW

A_INF, B_INF, CU_S, SERVO, S_INF, TB30, TM15DI/DO, TM31, TM41, VECTOR

Can be changed: - | **Access level:** 3
Data type: Unsigned16 | **Data set:** - | **Function diagram:** 2472
P-Group: Communications | **Units group:** - | **Unit selection:** -

Min	Max	Factory setting
-	-	-

Description: Connector output to interconnect the status words to a PROFIBUS PZD send word.

Index:
[0] = Status word 1
[1] = Status word 2
[2] = Free status word 3
[3] = Free status word 4

Dependency: Refer to: p2051, p2080, p2081, p2082, p2083

Note: r2089 together with p2080 to p2083 forms four binector-connector converters.

© Siemens AG, 2005. All rights reserved

r2090 BO: PROFIBUS PZD1 receive bit-serial / PB PZD1 recv bitw

A_INF, B_INF, CU_S, SERVO, S_INF, TB30, TM15DI/DO, TM31, TM41, VECTOR

Can be changed: - **Access level:** 3
Data type: Unsigned16 **Data set:** - **Function diagram:** 2460
P-Group: Communications **Units group:** - **Unit selection:** -

Min	Max	Factory setting
-	-	-

Description: Binector output for bit-serial interconnection of PZD1 (normally control word 1) received from the PROFIBUS master.

Bit field:

Bit	Signal name	0 signal	1 signal	FP
00	Bit 0	Off	On	-
01	Bit 1	Off	On	-
02	Bit 2	Off	On	-
03	Bit 3	Off	On	-
04	Bit 4	Off	On	-
05	Bit 5	Off	On	-
06	Bit 6	Off	On	-
07	Bit 7	Off	On	-
08	Bit 8	Off	On	-
09	Bit 9	Off	On	-
10	Bit 10	Off	On	-
11	Bit 11	Off	On	-
12	Bit 12	Off	On	-
13	Bit 13	Off	On	-
14	Bit 14	Off	On	-
15	Bit 15	Off	On	-

r2091 BO: PROFIBUS PZD2 received bit-serial / PB PZD2 recv bitw

A_INF, B_INF, CU_S, SERVO, S_INF, TB30, TM15DI/DO, TM31, TM41, VECTOR

Can be changed: - **Access level:** 3
Data type: Unsigned16 **Data set:** - **Function diagram:** 2460
P-Group: Communications **Units group:** - **Unit selection:** -

Min	Max	Factory setting
-	-	-

Description: Binector output for bit-serial interconnection of PZD2 received from the PROFIBUS master.

Bit field:

Bit	Signal name	0 signal	1 signal	FP
00	Bit 0	Off	On	-
01	Bit 1	Off	On	-
02	Bit 2	Off	On	-
03	Bit 3	Off	On	-
04	Bit 4	Off	On	-
05	Bit 5	Off	On	-
06	Bit 6	Off	On	-
07	Bit 7	Off	On	-
08	Bit 8	Off	On	-
09	Bit 9	Off	On	-
10	Bit 10	Off	On	-
11	Bit 11	Off	On	-
12	Bit 12	Off	On	-
13	Bit 13	Off	On	-
14	Bit 14	Off	On	-
15	Bit 15	Off	On	-

© Siemens AG, 2005. All rights reserved

r2092 BO: PROFIBUS PZD3 received bit-serial / PB PZD3 recv bitw

SERVO, TM41, VECTOR

Can be changed: -
Access level: 3
Data type: Unsigned16
Data set: -
Function diagram: 2460
P-Group: Communications
Units group: -
Unit selection: -

Min	Max	Factory setting
-	-	-

Description: Binector output for bit-serial interconnection of PZD3 received from the PROFIBUS master.

Bit field:

Bit	Signal name	0 signal	1 signal	FP
00	Bit 0	Off	On	-
01	Bit 1	Off	On	-
02	Bit 2	Off	On	-
03	Bit 3	Off	On	-
04	Bit 4	Off	On	-
05	Bit 5	Off	On	-
06	Bit 6	Off	On	-
07	Bit 7	Off	On	-
08	Bit 8	Off	On	-
09	Bit 9	Off	On	-
10	Bit 10	Off	On	-
11	Bit 11	Off	On	-
12	Bit 12	Off	On	-
13	Bit 13	Off	On	-
14	Bit 14	Off	On	-
15	Bit 15	Off	On	-

r2093 BO: PROFIBUS PZD4 received bit-serial / PB PZD4 recv bitw

SERVO, TM41, VECTOR

Can be changed: -
Access level: 3
Data type: Unsigned16
Data set: -
Function diagram: 2460
P-Group: Communications
Units group: -
Unit selection: -

Min	Max	Factory setting
-	-	-

Description: Binector output for bit-serial interconnection of PZD4 (normally control word 2) received from the PROFIBUS master.

Bit field:

Bit	Signal name	0 signal	1 signal	FP
00	Bit 0	Off	On	-
01	Bit 1	Off	On	-
02	Bit 2	Off	On	-
03	Bit 3	Off	On	-
04	Bit 4	Off	On	-
05	Bit 5	Off	On	-
06	Bit 6	Off	On	-
07	Bit 7	Off	On	-
08	Bit 8	Off	On	-
09	Bit 9	Off	On	-
10	Bit 10	Off	On	-
11	Bit 11	Off	On	-
12	Bit 12	Off	On	-
13	Bit 13	Off	On	-
14	Bit 14	Off	On	-
15	Bit 15	Off	On	-

© Siemens AG, 2005. All rights reserved

r2094 BO: PROFIBUS PZD received bit-serial / PB PZD recv bitw

A_INF, B_INF, CU_S, SERVO, S_INF, TB30, TM15DI/DO, TM31, TM41, VECTOR

Can be changed: -
Access level: 3
Data type: Unsigned16
Data set: -
Function diagram: 2460
P-Group: Communications
Units group: -
Unit selection: -

Min	Max	Factory setting
-	-	-

Description: Binector output for bit-serial onward interconnection of a PZD word received from the PROFIBUS master . The PZD is selected via p2099[0].

Bit field:

Bit	Signal name	0 signal	1 signal	FP
00	Bit 0	Off	On	-
01	Bit 1	Off	On	-
02	Bit 2	Off	On	-
03	Bit 3	Off	On	-
04	Bit 4	Off	On	-
05	Bit 5	Off	On	-
06	Bit 6	Off	On	-
07	Bit 7	Off	On	-
08	Bit 8	Off	On	-
09	Bit 9	Off	On	-
10	Bit 10	Off	On	-
11	Bit 11	Off	On	-
12	Bit 12	Off	On	-
13	Bit 13	Off	On	-
14	Bit 14	Off	On	-
15	Bit 15	Off	On	-

Dependency: Refer to: p2099

r2095 BO: PROFIBUS PZD received bit-serial / PB PZD recv bitw

A_INF, B_INF, CU_S, SERVO, S_INF, TB30, TM15DI/DO, TM31, TM41, VECTOR

Can be changed: -
Access level: 3
Data type: Unsigned16
Data set: -
Function diagram: 2460
P-Group: Communications
Units group: -
Unit selection: -

Min	Max	Factory setting
-	-	-

Description: Binector output for bit-serial interconnection of a PZD word received from the PROFIBUS master. The PZD is selected via p2099[1].

Bit field:

Bit	Signal name	0 signal	1 signal	FP
00	Bit 0	Off	On	-
01	Bit 1	Off	On	-
02	Bit 2	Off	On	-
03	Bit 3	Off	On	-
04	Bit 4	Off	On	-
05	Bit 5	Off	On	-
06	Bit 6	Off	On	-
07	Bit 7	Off	On	-
08	Bit 8	Off	On	-
09	Bit 9	Off	On	-
10	Bit 10	Off	On	-
11	Bit 11	Off	On	-
12	Bit 12	Off	On	-
13	Bit 13	Off	On	-
14	Bit 14	Off	On	-
15	Bit 15	Off	On	-

Dependency: Refer to: p2099

© Siemens AG, 2005. All rights reserved

p2098[0...1] Invert connector-binector converter bit-serial / CI_BO conv inv

A_INF, B_INF, CU_S, SERVO, S_INF, TB30, TM15DI/DO, TM31, TM41, VECTOR

Can be changed: U, T | **Access level:** 3
Data type: Unsigned16 | **Data set:** - | **Function diagram:** 2460
P-Group: Communications | **Units group:** - | **Unit selection:** -

Min	Max	Factory setting
0000 bin	1111 1111 1111 1111 bin	0000 bin

Description: Setting to invert the individual binector outputs of the connector-binector converter.
Using p2098[0], the signals of CI: p2099[0] are influenced.
Using p2098[1], the signals of CI: p2099[1] are influenced.

Bit field:

Bit	Signal name	0 signal	1 signal	FP
00	Bit 0	Not inverted	Inverted	-
01	Bit 1	Not inverted	Inverted	-
02	Bit 2	Not inverted	Inverted	-
03	Bit 3	Not inverted	Inverted	-
04	Bit 4	Not inverted	Inverted	-
05	Bit 5	Not inverted	Inverted	-
06	Bit 6	Not inverted	Inverted	-
07	Bit 7	Not inverted	Inverted	-
08	Bit 8	Not inverted	Inverted	-
09	Bit 9	Not inverted	Inverted	-
10	Bit 10	Not inverted	Inverted	-
11	Bit 11	Not inverted	Inverted	-
12	Bit 12	Not inverted	Inverted	-
13	Bit 13	Not inverted	Inverted	-
14	Bit 14	Not inverted	Inverted	-
15	Bit 15	Not inverted	Inverted	-

Dependency: Refer to: r2094, r2095, p2099
Note: Bit x = 1: Inverts the appropriate binector output.
Bit x = 0: No inversion.

p2099[0...1] CI: PROFIBUS PZD selection receive bit-serial / Select CO_BO conv

A_INF, B_INF, CU_S, SERVO, S_INF, TB30, TM15DI/DO, TM31, TM41, VECTOR

Can be changed: U, T | **Access level:** 3
Data type: Unsigned32 | **Data set:** - | **Function diagram:** 2460
P-Group: Communications | **Units group:** - | **Unit selection:** -

Min	Max	Factory setting
-	-	0

Description: Selects a PROFIBUS PZD receive word for bit-serial interconnection.
Dependency: Refer to: r2094, r2095
Note: p2099 together with r2094 and r2095 forms two connector-binector converters:
Connector input p2099[0] to binector outputs in r2094
Connector input p2099[1] to binector outputs in r2095

© Siemens AG, 2005. All rights reserved

p2100[0...19] Setting the fault number for fault response / F_no F response

All objects	**Can be changed:** U, T		**Access level:** 3
	Data type: Unsigned16	**Data set:** -	**Function diagram:** 1750, 8075
	P-Group: Messages	**Units group:** -	**Unit selection:** -
	Min	**Max**	**Factory setting**
	0	65535	0

Description: Selects the faults for which the fault response should be changed

Dependency: The fault is selected and the required response is set under the same index.
Refer to: p2101

Notice: For the following cases, it is not possible to re-parameterize the fault response to a fault:
- if there is no existing fault number.
- the message type is not "fault" (F).
- when a fault is present.

p2101[0...19] Setting the fault response / Fault response

CU_S, TB30, TM15, TM15DI/DO, TM17, TM31	**Can be changed:** U, T		**Access level:** 3
	Data type: Integer16	**Data set:** -	**Function diagram:** 1750, 8075
	P-Group: Messages	**Units group:** -	**Unit selection:** -
	Min	**Max**	**Factory setting**
	0	0	0

Description: Sets the fault response for the selected fault.

Values:
0: NONE

Dependency: The fault is selected and the required response is set under the same index.

p2101[0...19] Setting the fault response / Fault response

A_INF, B_INF, S_INF	**Can be changed:** U, T		**Access level:** 3
	Data type: Integer16	**Data set:** -	**Function diagram:** 1750, 8075
	P-Group: Messages	**Units group:** -	**Unit selection:** -
	Min	**Max**	**Factory setting**
	0	2	0

Description: Sets the fault response for the selected fault.

Values:
0: NONE
1: OFF1
2: OFF2

Dependency: The fault is selected and the required response is set under the same index.

© Siemens AG, 2005. All rights reserved

p2101[0...19] Setting the fault response / Fault response

SERVO, TM41, VECTOR

Can be changed: U, T		**Access level:** 3
Data type: Integer16	**Data set:** -	**Function diagram:** 1750, 8075
P-Group: Messages	**Units group:** -	**Unit selection:** -
Min	**Max**	**Factory setting**
0	7	0

Description: Sets the fault response for the selected fault.

Values:
0: NONE
1: OFF1
2: OFF2
3: OFF3
4: STOP1 (being developed)
5: STOP2
6: DCBRAKE (being developed)
7: ENCODER (p0491)

Dependency: The fault is selected and the required response is set under the same index.
Refer to: p2100

Notice: It is not possible to re-parameterize the response to a specific fault for faults that are already present (queued).

Note: OFF1:
Braking along the ramp-function generator down ramp followed by a pulse inhibit.
OFF2:
Internal/external pulse inhibit.
OFF3:
Braking along the OFF3 down ramp followed by a pulse inhibit.
STOP2:
n_set = 0
The fault response can only be changed for faults with the appropriate identification.
Example:
F12345 and fault response = NONE (OFF1, OFF2) --> The NONE fault response can be changed to either OFF1 or OFF2.

p2103 BI: 1. Acknowledge faults / 1. Acknowledge

CU_S, TB30, TM15, TM15DI/DO, TM17, TM31

Can be changed: U, T		**Access level:** 3
Data type: Unsigned32	**Data set:** -	**Function diagram:** -
P-Group: Messages	**Units group:** -	**Unit selection:** -
Min	**Max**	**Factory setting**
-	-	0

Description: Sets the first signal source to acknowledge faults.

Note: A fault acknowledgment is triggered with a 0/1 signal.

p2103[0...n] BI: 1. Acknowledge faults / 1. Acknowledge

A_INF, B_INF, SERVO, S_INF, TM41, VECTOR

Can be changed: U, T		**Access level:** 3
Data type: Unsigned32	**Data set:** CDS	**Function diagram:** 2442, 2443, 2546, 8920
P-Group: Messages	**Units group:** -	**Unit selection:** -
Min	**Max**	**Factory setting**
-	-	0

Description: Sets the first signal source to acknowledge faults.

Note: A fault acknowledgment is triggered with a 0/1 signal.

© Siemens AG, 2005. All rights reserved

p2104 BI: 2. Acknowledge faults / 2. Acknowledge

CU_S, TB30, TM15, TM15DI/DO, TM17, TM31

Can be changed: U, T		**Access level:** 3
Data type: Unsigned32	**Data set:** -	**Function diagram:** -
P-Group: Messages	**Units group:** -	**Unit selection:** -
Min	**Max**	**Factory setting**
-	-	0

Description: Sets the second signal source to acknowledge faults.
Note: A fault acknowledgment is triggered with a 0/1 signal.

p2104[0...n] BI: 2. Acknowledge faults / 2. Acknowledge

A_INF, B_INF, SERVO, S_INF, TM41, VECTOR

Can be changed: U, T		**Access level:** 3
Data type: Unsigned32	**Data set:** CDS	**Function diagram:** 2546, 8920
P-Group: Messages	**Units group:** -	**Unit selection:** -
Min	**Max**	**Factory setting**
-	-	0

Description: Sets the second signal source to acknowledge faults.
Note: A fault acknowledgment is triggered with a 0/1 signal.

p2105 BI: 3. Acknowledge faults / 3. Acknowledge

CU_S, TB30, TM15, TM15DI/DO, TM17, TM31

Can be changed: U, T		**Access level:** 3
Data type: Unsigned32	**Data set:** -	**Function diagram:** -
P-Group: Messages	**Units group:** -	**Unit selection:** -
Min	**Max**	**Factory setting**
-	-	0

Description: Sets the third signal source to acknowledge faults.
Note: A fault acknowledgment is triggered with a 0/1 signal.

p2105[0...n] BI: 3. Acknowledge faults / 3. Acknowledge

A_INF, B_INF, SERVO, S_INF, TM41, VECTOR

Can be changed: U, T		**Access level:** 3
Data type: Unsigned32	**Data set:** CDS	**Function diagram:** 2546, 8920
P-Group: Messages	**Units group:** -	**Unit selection:** -
Min	**Max**	**Factory setting**
-	-	0

Description: Sets the third signal source to acknowledge faults.
Note: A fault acknowledgment is triggered with a 0/1 signal.

p2106 BI: External fault 1 / External fault 1

CU_S, TB30, TM15, TM15DI/DO, TM17, TM31

Can be changed: U, T		**Access level:** 3
Data type: Unsigned32	**Data set:** -	**Function diagram:** -
P-Group: Messages	**Units group:** -	**Unit selection:** -
Min	**Max**	**Factory setting**
-	-	1

Description: Sets the signal source for external fault 1.
Dependency: Refer to: F07860
Note: An external fault is triggered with a 1/0 signal.
If this fault is output at the Control Unit, then it is transferred to all existing drive objects.

© Siemens AG, 2005. All rights reserved

p2106[0...n] BI: External fault 1 / External fault 1

A_INF, B_INF, SERVO, S_INF, TM41, VECTOR

Can be changed: U, T		**Access level:** 3
Data type: Unsigned32	**Data set:** CDS	**Function diagram:** 2546
P-Group: Messages	**Units group:** -	**Unit selection:** -
Min	**Max**	**Factory setting**
-	-	1

Description: Sets the signal source for external fault 1.
Dependency: Refer to: F07860
Note: An external fault is triggered with a 1/0 signal.
If this fault is output at the Control Unit, then it is transferred to all existing drive objects.

p2107 BI: External fault 2 / External fault 2

CU_S, TB30, TM15, TM15DI/DO, TM17, TM31

Can be changed: U, T		**Access level:** 3
Data type: Unsigned32	**Data set:** -	**Function diagram:** -
P-Group: Messages	**Units group:** -	**Unit selection:** -
Min	**Max**	**Factory setting**
-	-	1

Description: Sets the signal source for external fault 2.
Dependency: Refer to: F07861
Note: An external fault is triggered with a 1/0 signal.
If this fault is output at the Control Unit, then it is transferred to all existing drive objects.

p2107[0...n] BI: External fault 2 / External fault 2

A_INF, B_INF, SERVO, S_INF, TM41, VECTOR

Can be changed: U, T		**Access level:** 3
Data type: Unsigned32	**Data set:** CDS	**Function diagram:** 2546
P-Group: Messages	**Units group:** -	**Unit selection:** -
Min	**Max**	**Factory setting**
-	-	1

Description: Sets the signal source for external fault 2.
Dependency: Refer to: F07861
Note: An external fault is triggered with a 1/0 signal.
If this fault is output at the Control Unit, then it is transferred to all existing drive objects.

p2108 BI: External fault 3 / External fault 3

CU_S, TB30, TM15, TM15DI/DO, TM17, TM31

Can be changed: U, T		**Access level:** 3
Data type: Unsigned32	**Data set:** -	**Function diagram:** -
P-Group: Messages	**Units group:** -	**Unit selection:** -
Min	**Max**	**Factory setting**
-	-	1

Description: Sets the signal source for external fault 3.
External fault 3 is initiated by the following AND logic operation:
- BI: p2108 negated
- BI: p3111
- BI: p3112 negated

Dependency: Refer to: p3110, p3111, p3112
Refer to: F07862
Note: An external fault is triggered with a 1/0 signal.
If this fault is output at the Control Unit, then it is transferred to all existing drive objects.

© Siemens AG, 2005. All rights reserved

p2108[0...n] BI: External fault 3 / External fault 3

A_INF, B_INF, SERVO, S_INF, TM41, VECTOR

Can be changed: U, T		**Access level:** 3
Data type: Unsigned32	**Data set:** CDS	**Function diagram:** 2546
P-Group: Messages	**Units group:** -	**Unit selection:** -
Min	**Max**	**Factory setting**
-	-	1

Description: Sets the signal source for external fault 3.
External fault 3 is initiated by the following AND logic operation:
- BI: p2108 negated
- BI: p3111
- BI: p3112 negated

Dependency: Refer to: p3110, p3111, p3112
Refer to: F07862

Note: An external fault is triggered with a 1/0 signal.
If this fault is output at the Control Unit, then it is transferred to all existing drive objects.

r2109[0...63] Fault time removed in milliseconds / t_flt resolved ms

All objects

Can be changed: -		**Access level:** 3
Data type: Unsigned32	**Data set:** -	**Function diagram:** 1750, 8060
P-Group: Messages	**Units group:** TIME_M3	**Unit selection:** -
Min	**Max**	**Factory setting**
- [ms]	- [ms]	- [ms]

Description: Displays the system runtime in milliseconds when the fault was removed.

Dependency: Refer to: r0945, r0947, r0948, r0949, r2114, r2130, r2133, r2136

Note: The buffer parameters are cyclically updated in the background (refer to status signal in r2139).

r2110[0...63] Alarm number / Alarm number

All objects

Can be changed: -		**Access level:** 2
Data type: Unsigned16	**Data set:** -	**Function diagram:** 8065
P-Group: Messages	**Units group:** -	**Unit selection:** -
Min	**Max**	**Factory setting**
-	-	-

Description: This parameter is identical to r2122.

p2111 Alarm counter / Alarm counter

All objects

Can be changed: U, T		**Access level:** 3
Data type: Unsigned16	**Data set:** -	**Function diagram:** 1750, 8065
P-Group: Messages	**Units group:** -	**Unit selection:** -
Min	**Max**	**Factory setting**
0	65535	0

Description: Number of alarms that have occurred after the last reset.

Dependency: When p2111 is set to 0, the following is initiated:
- all of the alarms of the alarm buffer that have gone [0...7] are transferred into the alarm history [8...63].
- the alarm buffer [0...7] is deleted.

Refer to: r2110, r2122, r2123, r2124, r2125

Note: The parameter is reset to 0 at POWER ON.

© Siemens AG, 2005. All rights reserved

p2112 BI: External alarm 1 / External alarm 1

CU_S, TB30, TM15, TM15DI/DO, TM17, TM31

Can be changed: U, T		**Access level:** 3
Data type: Unsigned32	**Data set:** -	**Function diagram:** -
P-Group: Messages	**Units group:** -	**Unit selection:** -
Min	**Max**	**Factory setting**
-	-	1

Description: Sets the signal source for external alarm 1.
Dependency: Refer to: A07850
Note: An external alarm is triggered with a 1/0 signal.

p2112[0...n] BI: External alarm 1 / External alarm 1

A_INF, B_INF, SERVO, S_INF, TM41, VECTOR

Can be changed: U, T		**Access level:** 3
Data type: Unsigned32	**Data set:** CDS	**Function diagram:** 2546
P-Group: Messages	**Units group:** -	**Unit selection:** -
Min	**Max**	**Factory setting**
-	-	1

Description: Sets the signal source for external alarm 1.
Dependency: Refer to: A07850
Note: An external alarm is triggered with a 1/0 signal.

r2114[0...1] System runtime total / t_System total

CU_S

Can be changed: -		**Access level:** 3
Data type: Unsigned32	**Data set:** -	**Function diagram:** -
P-Group: Messages	**Units group:** -	**Unit selection:** -
Min	**Max**	**Factory setting**
-	-	-

Description: Displays the total system runtime for the drive unit.
Index 0 indicates the system runtime in milliseconds after reaching 86.400.000 ms (24 hours), the value is reset.
Index 1 indicates the system runtime in days.
Dependency: Refer to: r0948, r2109, r2123, r2125, r2130, r2136, r2145, r2146
Note: The time in r2114 is used to display the fault and alarm times.
At power-off the counter value is saved.
After the drive unit is powered-up, the counter continues to run with the value that was saved the last time that the drive unit was powered-down.

p2116 BI: External alarm 2 / External alarm 2

CU_S, TB30, TM15, TM15DI/DO, TM17, TM31

Can be changed: U, T		**Access level:** 3
Data type: Unsigned32	**Data set:** -	**Function diagram:** -
P-Group: Messages	**Units group:** -	**Unit selection:** -
Min	**Max**	**Factory setting**
-	-	1

Description: Sets the signal source for external alarm 2.
Dependency: Refer to: A07851
Note: An external alarm is triggered with a 1/0 signal.

© Siemens AG, 2005. All rights reserved

p2116[0...n] BI: External alarm 2 / External alarm 2

A_INF, B_INF, SERVO, S_INF, TM41, VECTOR	**Can be changed:** U, T		**Access level:** 3
	Data type: Unsigned32	**Data set:** CDS	**Function diagram:** 2546
	P-Group: Messages	**Units group:** -	**Unit selection:** -
	Min	**Max**	**Factory setting**
	-	-	1

Description: Sets the signal source for external alarm 2.
Dependency: Refer to: A07851
Note: An external alarm is triggered with a 1/0 signal.

p2117 BI: External alarm 3 / External alarm 3

CU_S, TB30, TM15, TM15DI/DO, TM17, TM31	**Can be changed:** U, T		**Access level:** 3
	Data type: Unsigned32	**Data set:** -	**Function diagram:** -
	P-Group: Messages	**Units group:** -	**Unit selection:** -
	Min	**Max**	**Factory setting**
	-	-	1

Description: Sets the signal source for external alarm 3.
Dependency: Refer to: A07852
Note: An external alarm is triggered with a 1/0 signal.

p2117[0...n] BI: External alarm 3 / External alarm 3

A_INF, B_INF, SERVO, S_INF, TM41, VECTOR	**Can be changed:** U, T		**Access level:** 3
	Data type: Unsigned32	**Data set:** CDS	**Function diagram:** 2546
	P-Group: Messages	**Units group:** -	**Unit selection:** -
	Min	**Max**	**Factory setting**
	-	-	1

Description: Sets the signal source for external alarm 3.
Dependency: Refer to: A07852
Note: An external alarm is triggered with a 1/0 signal.

p2118[0...19] Sets the message number for message type. / Msg_no Msg_type

All objects	**Can be changed:** U, T		**Access level:** 3
	Data type: Unsigned16	**Data set:** -	**Function diagram:** 1750, 8075
	P-Group: Messages	**Units group:** -	**Unit selection:** -
	Min	**Max**	**Factory setting**
	0	65535	0

Description: Selects faults or alarms for which the message type should be changed.
Dependency: Selects the fault or alarm selection and sets the required type of message realized under the same index.
Refer to: p2119
Notice: It is not possible to re-parameterize the message type in the following cases:
- if there is no existing message number.
- if a message is present.

© Siemens AG, 2005. All rights reserved

p2119[0...19] Setting the message type / Message type

All objects	**Can be changed:** U, T		**Access level:** 3
	Data type: Integer16	**Data set:** -	**Function diagram:** 1750, 8075
	P-Group: Messages	**Units group:** -	**Unit selection:** -
	Min	**Max**	**Factory setting**
	1	3	1

Description: Sets the message type for the selected fault or alarm.

Values:
1: Fault (F)
2: Alarm (A)
3: No message (N)

Dependency: Selects the fault or alarm selection and sets the required type of message realized under the same index.
Refer to: p2118

Notice: It is not possible to re-parameterize the message type for the existing faults or alarms.

Note: The message type can only be changed for messages with the appropriate identification.
Example:
F12345(A) --> Fault F12345 can be changed to alarm A12345.
In this case, the message number that may be possibly entered in p2100[0...19] and p2126[0...19] is automatically removed.

r2120 Sum of fault and alarm buffer changes / Sum buffer changed

All objects	**Can be changed:** -		**Access level:** 4
	Data type: Unsigned16	**Data set:** -	**Function diagram:** 8065
	P-Group: Messages	**Units group:** -	**Unit selection:** -
	Min	**Max**	**Factory setting**
	-	-	-

Description: Displays the sum of all of the fault and alarm buffer changes in the drive unit.

Dependency: Refer to: r0944, r2121

r2121 Counter, alarm buffer changes / Alrm buff changed

All objects	**Can be changed:** -		**Access level:** 3
	Data type: Unsigned16	**Data set:** -	**Function diagram:** 8065
	P-Group: Messages	**Units group:** -	**Unit selection:** -
	Min	**Max**	**Factory setting**
	-	-	-

Description: This counter is incremented every time the alarm buffer changes.

Dependency: Refer to: r2110, r2122, r2123, r2124, r2125

© Siemens AG, 2005. All rights reserved

r2122[0...63] Alarm code / Alarm code

All objects	**Can be changed:** -		**Access level:** 2
	Data type: Unsigned16	**Data set:** -	**Function diagram:** 1750, 8065
	P-Group: Messages	**Units group:** -	**Unit selection:** -
	Min	**Max**	**Factory setting**
	-	-	-

Description: Displays the number of alarms that have occurred.
Dependency: Refer to: r2110, r2123, r2124, r2125, r2134, r2145, r2146
Note: The buffer parameters are cyclically updated in the background (refer to status signal in r2139).
Alarm buffer structure (general principle):
r2122[0], r2124[0], r2123[0], r2125[0] --> alarm 1 (the oldest)
...
r2122[7], r2124[7], r2123[7], r2125[7] --> Alarm 8 (the latest)
When the alarm buffer is full, the alarms that have gone are entered into the alarm history:
r2122[8], r2124[8], r2123[8], r2125[8] --> Alarm 1 (the latest)
...
r2122[63], r2124[63], r2123[63], r2125[63] --> alarm 56 (the oldest)

r2123[0...63] Alarm time received in milliseconds / t_alarm recv ms

All objects	**Can be changed:** -		**Access level:** 3
	Data type: Unsigned32	**Data set:** -	**Function diagram:** 1750, 8065
	P-Group: Messages	**Units group:** -	**Unit selection:** -
	Min	**Max**	**Factory setting**
	-	-	-

Description: Displays the system runtime in milliseconds when the alarm occurred.
Dependency: Refer to: r2110, r2114, r2122, r2124, r2125, r2134, r2145, r2146
Note: The buffer parameters are cyclically updated in the background (refer to status signal in r2139).

r2124[0...63] Alarm value / Alarm value

All objects	**Can be changed:** -		**Access level:** 3
	Data type: Integer32	**Data set:** -	**Function diagram:** 1750, 8065
	P-Group: Messages	**Units group:** -	**Unit selection:** -
	Min	**Max**	**Factory setting**
	-	-	-

Description: Displays additional information about the active alarm (as integer number).
Dependency: Refer to: r2110, r2122, r2123, r2125, r2134, r2145, r2146
Note: The buffer parameters are cyclically updated in the background (refer to status signal in r2139).

© Siemens AG, 2005. All rights reserved

r2125[0...63] Alarm time removed in milliseconds / t_alarm res ms

All objects	**Can be changed:** -		**Access level:** 3
	Data type: Unsigned32	**Data set:** -	**Function diagram:** 1750, 8065
	P-Group: Messages	**Units group:** -	**Unit selection:** -
	Min	**Max**	**Factory setting**
	-	-	-

Description: Displays the system runtime in milliseconds when the alarm was cleared.
Dependency: Refer to: r2110, r2114, r2122, r2123, r2124, r2134, r2145, r2146
Note: The buffer parameters are cyclically updated in the background (refer to status signal in r2139).

p2126[0...19] Setting fault number for acknowledge mode / Fault_no ackn_mode

All objects	**Can be changed:** U, T		**Access level:** 3
	Data type: Unsigned16	**Data set:** -	**Function diagram:** 1750, 8075
	P-Group: Messages	**Units group:** -	**Unit selection:** -
	Min	**Max**	**Factory setting**
	0	65535	0

Description: Selects the faults for which the acknowledge mode is to be changed
Dependency: Selects the faults and sets the required acknowledge mode realized under the same index
Refer to: p2127
Notice: It is not possible to re-parameterize the acknowledge mode of a fault in the following cases:
- if there is no existing fault number.
- the message type is not "fault" (F).
- when a fault is present.

p2127[0...19] Sets acknowledgment mode / Acknowledge mode

All objects	**Can be changed:** U, T		**Access level:** 3
	Data type: Integer16	**Data set:** -	**Function diagram:** 1750, 8075
	P-Group: Messages	**Units group:** -	**Unit selection:** -
	Min	**Max**	**Factory setting**
	1	2	1

Description: Sets the acknowledge mode for selected fault.
Values:
1: Acknowledgment is only possible using POWER ON
2: Fault can be IMMEDIATELY acknowledged after cause removed
Dependency: Selects the faults and sets the required acknowledge mode realized under the same index
Refer to: p2126
Notice: It is not possible to re-parameterize the acknowledge mode for existing faults.
Note: 1: POWER ON (POWER_ON)
2: IMMEDIATELY
The acknowledge mode can only be changed for faults with the appropriate identification.
Example:
F12345 and acknowledge mode = POWER ON (IMMEDIATELY) --> The acknowledge mode can be changed from POWER ON to IMMEDIATELY.

© Siemens AG, 2005. All rights reserved

p2128[0...15] Selecting fault/alarm code for trigger / Message trigger

All objects

Can be changed: U, T | **Access level:** 3

Data type: Unsigned16 | **Data set:** - | **Function diagram:** 1750, 8070

P-Group: Messages | **Units group:** - | **Unit selection:** -

Min	Max	Factory setting
0	65535	0

Description: Selects faults or alarms which can be used as trigger.

Dependency: Refer to: r2129

r2129 CO/BO: Trigger word for faults and alarms / Trigger word

All objects

Can be changed: - | **Access level:** 3

Data type: Unsigned16 | **Data set:** - | **Function diagram:** 1530, 8070

P-Group: Messages | **Units group:** - | **Unit selection:** -

Min	Max	Factory setting
-	-	-

Description: Trigger signal for the selected faults and alarms

Bit field:

Bit	Signal name	0 signal	1 signal	FP
00	Trigger signal p2128[0]	Off	On	-
01	Trigger signal p2128[1]	Off	On	-
02	Trigger signal p2128[2]	Off	On	-
03	Trigger signal p2128[3]	Off	On	-
04	Trigger signal p2128[4]	Off	On	-
05	Trigger signal p2128[5]	Off	On	-
06	Trigger signal p2128[6]	Off	On	-
07	Trigger signal p2128[7]	Off	On	-
08	Trigger signal p2128[8]	Off	On	-
09	Trigger signal p2128[9]	Off	On	-
10	Trigger signal p2128[10]	Off	On	-
11	Trigger signal p2128[11]	Off	On	-
12	Trigger signal p2128[12]	Off	On	-
13	Trigger signal p2128[13]	Off	On	-
14	Trigger signal p2128[14]	Off	On	-
15	Trigger signal p2128[15]	Off	On	-

Dependency: If one of the faults or alarms selected in p2128[n] occurs, then the particular bit of this binector output is set.
Refer to: p2128

Note: CO: r2129 = 0 --> None of the selected messages has occurred.
CO: r2129 > 0 --> At least one of the selected messages has occurred.

r2130[0...63] Fault time received in days / t_fault recv days

All objects

Can be changed: - | **Access level:** 3

Data type: Unsigned16 | **Data set:** - | **Function diagram:** 8060

P-Group: Messages | **Units group:** - | **Unit selection:** -

Min	Max	Factory setting
-	-	-

Description: Displays the system runtime in days when the fault occurred.

Dependency: Refer to: r0945, r0947, r0948, r0949, r2109, r2114, r2133, r2136

Note: The buffer parameters are cyclically updated in the background (refer to status signal in r2139).

© Siemens AG, 2005. All rights reserved

r2131 CO: Actual fault code / Actual fault code

All objects	**Can be changed:** -		**Access level:** 3
	Data type: Unsigned16	**Data set:** -	**Function diagram:** 8060
	P-Group: Messages	**Units group:** -	**Unit selection:** -
	Min	**Max**	**Factory setting**
	-	-	-

Description: Displays the code of the oldest active fault.
Note: 0: No fault present.

r2132 CO: Actual alarm code / Actual alarm code

All objects	**Can be changed:** -		**Access level:** 3
	Data type: Unsigned16	**Data set:** -	**Function diagram:** 8065
	P-Group: Messages	**Units group:** -	**Unit selection:** -
	Min	**Max**	**Factory setting**
	-	-	-

Description: Displays the code of the last alarm that occurred.
Note: 0: No alarm present.

r2133[0...63] Fault value for float values / Fault val float

All objects	**Can be changed:** -		**Access level:** 3
	Data type: Floating Point	**Data set:** -	**Function diagram:** 8060
	P-Group: Messages	**Units group:** -	**Unit selection:** -
	Min	**Max**	**Factory setting**
	-	-	-

Description: Displays additional information about the fault that occurred for float values.
Dependency: Refer to: r0945, r0947, r0948, r0949, r2109, r2130, r2136
Note: The buffer parameters are cyclically updated in the background (refer to status signal in r2139).

r2134[0...63] Alarm value for float values / Alarm value float

All objects	**Can be changed:** -		**Access level:** 3
	Data type: Floating Point	**Data set:** -	**Function diagram:** 8065
	P-Group: Messages	**Units group:** -	**Unit selection:** -
	Min	**Max**	**Factory setting**
	-	-	-

Description: Displays additional information about the active alarm for float values.
Dependency: Refer to: r2110, r2122, r2123, r2124, r2125, r2145, r2146
Note: The buffer parameters are cyclically updated in the background (refer to status signal in r2139).

© Siemens AG, 2005. All rights reserved

r2135 CO/BO: Status word faults/alarms 2 / ZSW fault/alarm 2

All objects

Can be changed: -
Access level: 2
Data type: Unsigned16
Data set: -
Function diagram: 1530, 2548
P-Group: Displays, signals
Units group: -
Unit selection: -

Min	Max	Factory setting
-	-	-

Description: Displays the second status word of faults and alarms.

Bit field:

Bit	Signal name	0 signal	1 signal	FP
00	Fault, encoder 1	No	Yes	-
01	Fault, encoder 2	No	Yes	-
02	Fault, encoder 3	No	Yes	-
12	Fault motor overtemperature	No	Yes	-
13	Fault thermal overload power module	No	Yes	-
14	Alarm, motor overtemperature	No	Yes	-
15	Alarm, power module thermal overload	No	Yes	-

r2136[0...63] Fault time removed in days / t_flt resolv. days

All objects

Can be changed: -
Access level: 3
Data type: Unsigned16
Data set: -
Function diagram: 8060
P-Group: Messages
Units group: -
Unit selection: -

Min	Max	Factory setting
-	-	-

Description: Displays the system runtime in days when the fault was removed.
Dependency: Refer to: r0945, r0947, r0948, r0949, r2109, r2114, r2130, r2133
Note: The buffer parameters are cyclically updated in the background (refer to status signal in r2139).

r2138 CO/BO: Control word faults/alarms / STW fault/alarm

All objects

Can be changed: -
Access level: 2
Data type: Unsigned16
Data set: -
Function diagram: 1530, 2546
P-Group: Displays, signals
Units group: -
Unit selection: -

Min	Max	Factory setting
-	-	-

Description: Displays the control word of the faults and alarms.

Bit field:

Bit	Signal name	0 signal	1 signal	FP
07	Acknowledge fault	No	Yes (0/1 edge)	-
10	External alarm 1 (A07850)	Yes (1/0 edge)	No	-
11	External alarm 2 (A07851)	Yes (1/0 edge)	No	-
12	External alarm 3 (A07852)	Yes (1/0 edge)	No	-
13	External fault 1 (F07860)	Yes (1/0 edge)	No	-
14	External fault 2 (F07861)	Yes (1/0 edge)	No	-
15	External fault 3 (F07862)	Yes (1/0 edge)	No	-

Dependency: Refer to: p2103, p2104, p2105, p2106, p2107, p2108, p2112, p2116, p2117, p3110, p3111, p3112

© Siemens AG, 2005. All rights reserved

r2139 CO/BO: Status word faults/alarms 1 / ZSW fault/alarm 1

All objects

Can be changed: -
Access level: 2
Data type: Unsigned16
Data set: -
Function diagram: 1530, 2548
P-Group: Displays, signals
Units group: -
Unit selection: -

Min	Max	Factory setting
-	-	-

Description: Displays the first status word of faults and alarms.

Bit field:

Bit	Signal name	0 signal	1 signal	FP
00	Ackn. running	No	Yes	-
03	Fault present	No	Yes	-
06	Internal message 1 present	No	Yes	-
07	Alarm present	No	Yes	-
08	Internal message 2 present	No	Yes	-

Note: Re bit 03, 07:
These bits are set if at least one fault/alarm occurs. Data is entered into the fault/alarm buffer with delay. This is the reason that the fault/alarm buffer should only be read if, after "fault present"/"alarm present" has occurred, a change in the buffer was also detected (r0944, r2121).

p2140[0...n] Hysteresis speed 2 / n_hysteresis 2

SERVO, VECTOR

Can be changed: U, T
Access level: 3
Data type: Floating Point
Data set: DDS
Function diagram: 8010
P-Group: Messages
Units group: SPEED_ROT
Unit selection: -

Min	Max	Factory setting
0.00 [1/min]	300.00 [1/min]	90.00 [1/min]

Description: Sets the hysteresis speed/velocity (bandwidth) for the following signals:
"|n_act| < = speed threshold value 2" (BO: r2197.1)
"|n_act| > speed threshold value 2" (BO: r2197.2)

Dependency: Refer to: p2155, r2197

p2140[0...n] Hysteresis velocity 2 / n_hysteresis 2

SERVO (Lin)

Can be changed: U, T
Access level: 3
Data type: Floating Point
Data set: DDS
Function diagram: 8010
P-Group: Messages
Units group: SPEED_LIN_METRIC_P3
Unit selection: -

Min	Max	Factory setting
0.00 [m/min]	10.00 [m/min]	0.90 [m/min]

Description: Sets the hysteresis speed/velocity (bandwidth) for the following signals:
"|n_act| < = speed threshold value 2" (BO: r2197.1)
"|n_act| > speed threshold value 2" (BO: r2197.2)

Dependency: Refer to: p2155, r2197

p2141[0...n] Speed threshold 1 / n_thresh val 1

SERVO, VECTOR

Can be changed: U, T
Access level: 3
Data type: Floating Point
Data set: DDS
Function diagram: 8010
P-Group: Messages
Units group: SPEED_ROT
Unit selection: -

Min	Max	Factory setting
0.00 [1/min]	210000.00 [1/min]	5.00 [1/min]

Description: Sets the speed/velocity threshold value for the signal "f or n comparison value reached or exceeded" (BO: r2199.1).

Dependency: Refer to: p2142, r2199

© Siemens AG, 2005. All rights reserved

p2141[0...n] Velocity threshold value 1 / n_thresh val 1

SERVO (Lin)	**Can be changed:** U, T		**Access level:** 3
	Data type: Floating Point	**Data set:** DDS	**Function diagram:** 8010
	P-Group: Messages	**Units group:** SPEED_LIN_METRIC_P3	**Unit selection:** -
	Min	**Max**	**Factory setting**
	0.00 [m/min]	1000.00 [m/min]	0.05 [m/min]

Description: Sets the speed/velocity threshold value for the signal "f or n comparison value reached or exceeded" (BO: r2199.1).
Dependency: Refer to: p2142, r2199

p2142[0...n] Hysteresis speed 1 / n_hysteresis 1

SERVO, VECTOR	**Can be changed:** U, T		**Access level:** 3
	Data type: Floating Point	**Data set:** DDS	**Function diagram:** 8010
	P-Group: Messages	**Units group:** SPEED_ROT	**Unit selection:** -
	Min	**Max**	**Factory setting**
	0.00 [1/min]	300.00 [1/min]	2.00 [1/min]

Description: Sets the hysteresis speed/velocity (bandwidth) for the signal "f or n / v comparison value reached or exceeded" (BO: r2199.1).
Dependency: Refer to: p2141, r2199

p2142[0...n] Hysteresis velocity 1 / n_hysteresis 1

SERVO (Lin)	**Can be changed:** U, T		**Access level:** 3
	Data type: Floating Point	**Data set:** DDS	**Function diagram:** 8010
	P-Group: Messages	**Units group:** SPEED_LIN_METRIC_P3	**Unit selection:** -
	Min	**Max**	**Factory setting**
	0.00 [m/min]	10.00 [m/min]	0.02 [m/min]

Description: Sets the hysteresis speed/velocity (bandwidth) for the signal "f or n / v comparison value reached or exceeded" (BO: r2199.1).
Dependency: Refer to: p2141, r2199

r2145[0...63] Alarm time received in days / t_alarm recv days

All objects	**Can be changed:** -		**Access level:** 3
	Data type: Unsigned16	**Data set:** -	**Function diagram:** 8065
	P-Group: Messages	**Units group:** -	**Unit selection:** -
	Min	**Max**	**Factory setting**
	-	-	-

Description: Displays the system runtime in days when the alarm occurred.
Dependency: Refer to: r2110, r2114, r2122, r2123, r2124, r2125, r2134, r2146
Note: The buffer parameters are cyclically updated in the background (refer to status signal in r2139).

r2146[0...63] Alarm time removed in days / t_alarm res days

All objects	**Can be changed:** -		**Access level:** 3
	Data type: Unsigned16	**Data set:** -	**Function diagram:** 8065
	P-Group: Messages	**Units group:** -	**Unit selection:** -
	Min	**Max**	**Factory setting**
	-	-	-

Description: Displays the system runtime in days when the alarm was cleared.
Dependency: Refer to: r2110, r2114, r2122, r2123, r2124, r2125, r2134, r2145
Note: The buffer parameters are cyclically updated in the background (refer to status signal in r2139).

© Siemens AG, 2005. All rights reserved

p2147 Delete fault buffer of all drive objects / Del fault buffer

CU_S

Can be changed: U, T		**Access level:** 4
Data type: Integer16	**Data set:** -	**Function diagram:** 8060
P-Group: Displays, signals	**Units group:** -	**Unit selection:** -
Min	**Max**	**Factory setting**
0	1	0

Description: Is used to delete (clear) the fault buffer of all of the existing drive objects.

Values:
0: not active
1: Start to delete the fault buffer of all drive objects

Dependency: Refer to: r0945, r0947, r0948, r0949, r2109, r2130, r2133, r2136

Note: p2147 is automatically set to 0 after execution.

p2148[0...n] BI: Ramp-function generator active / HLG active

SERVO, VECTOR

Can be changed: U, T		**Access level:** 3
Data type: Unsigned32	**Data set:** CDS	**Function diagram:** 8010
P-Group: Messages	**Units group:** -	**Unit selection:** -
Min	**Max**	**Factory setting**
-	-	0

Description: Sets the signal source for the signal "ramp-function generator active" for the following signals/messages:
"Speed setpoint - actual value deviation within tolerance t_on" (BO: r2199.4)
Ramp-up/ramp-down completed (BO: r2199.5)

Note: The binector input is automatically pre-assigned to r1199.2.
The following applies for SERVO:
The pre-assignment is only made when the function module "setpoint channel" is activated (r0108.8 = 1).

p2149[0...n] Monitoring, configuration / Monit config

SERVO, VECTOR

Can be changed: U, T		**Access level:** 3
Data type: Unsigned16	**Data set:** DDS	**Function diagram:** 8010
P-Group: Messages	**Units group:** -	**Unit selection:** -
Min	**Max**	**Factory setting**
0000 bin	0001 bin	0000 bin

Description: Configuration word for messages and monitoring functions.

Bit field:

Bit	Signal name	0 signal	1 signal	FP
00	Enable alarm A07903	No	Yes	8010

Dependency: Refer to: r2197
Refer to: A07903

Note: Re bit 00:
Alarm A07903 is output when the bit is set with p2197.7 = 0 (n_set <> n_act).

p2150[0...n] Hysteresis speed 3 / n_hysteresis 3

SERVO, VECTOR

Can be changed: U, T		**Access level:** 3
Data type: Floating Point	**Data set:** DDS	**Function diagram:** 8010
P-Group: Messages	**Units group:** SPEED_ROT	**Unit selection:** -
Min	**Max**	**Factory setting**
0.00 [1/min]	300.00 [1/min]	2.00 [1/min]

Description: Sets the hysteresis speed/velocity (bandwidth) for the following signals:
"|n_act| < speed threshold value 3" (BO: r2199.0)
"n_set >= 0" (BO: r2198.5)
"n_act >= 0" (BO: r2197.3)

Dependency: Refer to: p2161, r2197, r2199

© Siemens AG, 2005. All rights reserved

p2150[0...n] Hysteresis velocity 3 / n_hysteresis 3

SERVO (Lin)

Can be changed: U, T		**Access level:** 3
Data type: Floating Point	**Data set:** DDS	**Function diagram:** 8010
P-Group: Messages	**Units group:** SPEED_LIN_METRIC_P3	**Unit selection:** -
Min	**Max**	**Factory setting**
0.00 [m/min]	3.00 [m/min]	0.02 [m/min]

Description: Sets the hysteresis speed/velocity (bandwidth) for the following signals:
"|n_act| < speed threshold value 3" (BO: r2199.0)
"n_set >= 0" (BO: r2198.5)
"n_act >= 0" (BO: r2197.3)

Dependency: Refer to: p2161, r2197, r2199

p2151[0...n] CI: Speed setpoint for messages/signals / n_set for msg

SERVO, VECTOR

Can be changed: T		**Access level:** 3
Data type: Unsigned32	**Data set:** CDS	**Function diagram:** 8010
P-Group: Messages	**Units group:** -	**Unit selection:** -
Min	**Max**	**Factory setting**
-	-	1170[0]

Description: Sets the signal source for the speed setpoint for the following messages:
"Speed setpoint - actual value deviation within tolerance t_off" (BO: r2197.7)
Ramp-up/ramp-down completed (BO: r2199.5)
"|n_set| < p2161" (BO: r2198.4)
"n_set > 0" (BO: r2198.5)

Dependency: Refer to: r2197, r2198, r2199

p2153[0...n] Speed actual value filter time constant / n_act_filt T

SERVO, VECTOR

Can be changed: U, T		**Access level:** 3
Data type: Floating Point	**Data set:** DDS	**Function diagram:** 8010
P-Group: Messages	**Units group:** TIME_M3	**Unit selection:** -
Min	**Max**	**Factory setting**
0 [ms]	1000000 [ms]	0 [ms]

Description: Sets the time constant of the PT1 element to smooth the speed / velocity actual value. The smoothed actual speed/velocity is compared with the threshold values and is only used for messages and signals.

Dependency: Refer to: r2169

p2154[0...n] CI: Speed setpoint 2 / n_set 2

SERVO, VECTOR

Can be changed: T		**Access level:** 3
Data type: Unsigned32	**Data set:** CDS	**Function diagram:** 8010
P-Group: Messages	**Units group:** -	**Unit selection:** -
Min	**Max**	**Factory setting**
-	-	0

Description: Sets the signal source for speed setpoint 2.
The sum from CI: p2151 and CI: p2154 is used for the following messages:
"Speed setpoint - actual value deviation within tolerance t_off" (BO: r2197.7)
"Speed setpoint - actual value deviation within tolerance t_on" (BO: r2199.4)
Ramp-up/ramp-down completed (BO: r2199.5)

Dependency: Refer to: p2151, r2197, r2199

© Siemens AG, 2005. All rights reserved

p2155[0...n] Speed threshold 2 / n_thresh val 2

SERVO, VECTOR	**Can be changed:** U, T		**Access level:** 3
	Data type: Floating Point	**Data set:** DDS	**Function diagram:** 8010
	P-Group: Messages	**Units group:** SPEED_ROT	**Unit selection:** -
	Min	**Max**	**Factory setting**
	0.00 [1/min]	210000.00 [1/min]	900.00 [1/min]

Description: Sets the speed/velocity threshold value for the following messages:
"|n_act| < = speed threshold value 2" (BO: r2197.1)
"|n_act| > speed threshold value 2" (BO: r2197.2)

Dependency: Refer to: p2140, r2197

p2155[0...n] Velocity threshold value 2 / n_thresh val 2

SERVO (Lin)	**Can be changed:** U, T		**Access level:** 3
	Data type: Floating Point	**Data set:** DDS	**Function diagram:** 8010
	P-Group: Messages	**Units group:** SPEED_LIN_METRIC_P3	**Unit selection:** -
	Min	**Max**	**Factory setting**
	0.00 [m/min]	1000.00 [m/min]	9.00 [m/min]

Description: Sets the speed/velocity threshold value for the following messages:
"|n_act| < = speed threshold value 2" (BO: r2197.1)
"|n_act| > speed threshold value 2" (BO: r2197.2)

Dependency: Refer to: p2140, r2197

p2156[0...n] On delay, comparison value reached / t_on cmpr val rchd

SERVO, VECTOR	**Can be changed:** U, T		**Access level:** 2
	Data type: Floating Point	**Data set:** DDS	**Function diagram:** 8010
	P-Group: Messages	**Units group:** TIME_M3	**Unit selection:** -
	Min	**Max**	**Factory setting**
	0.0 [ms]	10000.0 [ms]	0.0 [ms]

Description: Sets the switch-in delay time for the signal "comparison value reached" (BO: r2199.1).

Dependency: Refer to: p2141, p2142, r2199

p2161[0...n] Speed threshold 3 / n_thresh val 3

SERVO, VECTOR	**Can be changed:** U, T		**Access level:** 3
	Data type: Floating Point	**Data set:** DDS	**Function diagram:** 8010
	P-Group: Messages	**Units group:** SPEED_ROT	**Unit selection:** -
	Min	**Max**	**Factory setting**
	0.00 [1/min]	210000.00 [1/min]	5.00 [1/min]

Description: Sets the speed/velocity threshold value for the signal "|n_act| < speed threshold value 3" (BO: r2199.0).

Dependency: Refer to: p2150, r2199

© Siemens AG, 2005. All rights reserved

p2161[0...n] Velocity threshold value 3 / n_thresh val 3

SERVO (Lin)	**Can be changed:** U, T		**Access level:** 3
	Data type: Floating Point	**Data set:** DDS	**Function diagram:** 8010
	P-Group: Messages	**Units group:** SPEED_LIN_METRIC_P3	**Unit selection:** -
	Min	**Max**	**Factory setting**
	0.00 [m/min]	1000.00 [m/min]	0.05 [m/min]

Description: Sets the speed/velocity threshold value for the signal "|n_act| < speed threshold value 3" (BO: r2199.0).
Dependency: Refer to: p2150, r2199

p2162[0...n] Hysteresis speed n_act > n_max / Hyst n_act>n_max

SERVO, VECTOR	**Can be changed:** U, T		**Access level:** 2
	Data type: Floating Point	**Data set:** DDS	**Function diagram:** 8010
	P-Group: Messages	**Units group:** SPEED_ROT	**Unit selection:** -
	Min	**Max**	**Factory setting**
	0.00 [1/min]	60000.00 [1/min]	600.00 [1/min]

Description: Sets the hysteresis speed/velocity (bandwidth) for the signal "n_act > n_max" (BO: r2197.6).
Dependency: Refer to: r1084, r1087, r2197
Note: For a negative speed limit (r1087) the hysteresis is effective below the limit value and for a positive speed limit (r1084) above the limit value.

p2162[0...n] Hysteresis velocity n_act > n_max / Hyst n_act>n_max

SERVO (Lin)	**Can be changed:** U, T		**Access level:** 2
	Data type: Floating Point	**Data set:** DDS	**Function diagram:** 8010
	P-Group: Messages	**Units group:** SPEED_LIN_METRIC_P3	**Unit selection:** -
	Min	**Max**	**Factory setting**
	0.00 [m/min]	1000.00 [m/min]	6.00 [m/min]

Description: Sets the hysteresis speed/velocity (bandwidth) for the signal "n_act > n_max" (BO: r2197.6).
Dependency: Refer to: r1084, r1087, r2197
Note: For a negative speed limit (r1087) the hysteresis is effective below the limit value and for a positive speed limit (r1084) above the limit value.

p2163[0...n] Speed threshold 4 / n_thresh val 4

SERVO, VECTOR	**Can be changed:** U, T		**Access level:** 2
	Data type: Floating Point	**Data set:** DDS	**Function diagram:** 8010
	P-Group: Messages	**Units group:** SPEED_ROT	**Unit selection:** -
	Min	**Max**	**Factory setting**
	0.00 [1/min]	210000.00 [1/min]	90.00 [1/min]

Description: Sets the speed/velocity threshold value for the "speed setpoint - actual value deviation in tolerance t_off" signal/message (BO: r2197.7).
Dependency: Refer to: p2164, p2166, r2197

© Siemens AG, 2005. All rights reserved

p2163[0...n] Velocity threshold value 4 / n_thresh val 4

SERVO (Lin)

Can be changed: U, T		**Access level:** 2
Data type: Floating Point	**Data set:** DDS	**Function diagram:** 8010
P-Group: Messages	**Units group:** SPEED_LIN_METRIC_P3	**Unit selection:** -
Min	**Max**	**Factory setting**
0.00 [m/min]	1000.00 [m/min]	0.90 [m/min]

Description: Sets the speed/velocity threshold value for the "speed setpoint - actual value deviation in tolerance t_off" signal/message (BO: r2197.7).

Dependency: Refer to: p2164, p2166, r2197

p2164[0...n] Hysteresis speed 4 / n_hysteresis 4

SERVO, VECTOR

Can be changed: U, T		**Access level:** 2
Data type: Floating Point	**Data set:** DDS	**Function diagram:** 8010
P-Group: Messages	**Units group:** SPEED_ROT	**Unit selection:** -
Min	**Max**	**Factory setting**
0.00 [1/min]	200.00 [1/min]	2.00 [1/min]

Description: Sets the hysteresis speed/velocity (bandwidth) for the "speed setpoint - actual value deviation in tolerance t_off" signal/message (BO: r2197.7).

Dependency: Refer to: p2163, p2166, r2197

p2164[0...n] Hysteresis velocity 4 / n_hysteresis 4

SERVO (Lin)

Can be changed: U, T		**Access level:** 2
Data type: Floating Point	**Data set:** DDS	**Function diagram:** 8010
P-Group: Messages	**Units group:** SPEED_LIN_METRIC_P3	**Unit selection:** -
Min	**Max**	**Factory setting**
0.00 [m/min]	10.00 [m/min]	0.02 [m/min]

Description: Sets the hysteresis speed/velocity (bandwidth) for the "speed setpoint - actual value deviation in tolerance t_off" signal/message (BO: r2197.7).

Dependency: Refer to: p2163, p2166, r2197

p2166[0...n] Off delay n_act = n_set / t_del_off n_i=n_so

SERVO, VECTOR

Can be changed: U, T		**Access level:** 2
Data type: Floating Point	**Data set:** DDS	**Function diagram:** 8010
P-Group: Messages	**Units group:** TIME_M3	**Unit selection:** -
Min	**Max**	**Factory setting**
0.0 [ms]	10000.0 [ms]	200.0 [ms]

Description: Sets the power-off delay time for the "speed setpoint - actual value deviation in tolerance t_off" signal/message (BO: r2197.7).

Dependency: Refer to: p2163, p2164, r2197

p2167[0...n] Switch-on delay n_act = n_set / t_on n_act=n_set

SERVO, VECTOR

Can be changed: U, T		**Access level:** 2
Data type: Floating Point	**Data set:** DDS	**Function diagram:** 8010
P-Group: Messages	**Units group:** TIME_M3	**Unit selection:** -
Min	**Max**	**Factory setting**
0.0 [ms]	10000.0 [ms]	200.0 [ms]

Description: Sets the switch-in delay for the "speed setpoint - actual value deviation in tolerance t_on" signal/message (BO: r2199.4).

© Siemens AG, 2005. All rights reserved

r2169 **CO: Speed actual value smoothed signals / n_act smth message**

SERVO, VECTOR	**Can be changed:** -		**Access level:** 2
	Data type: Floating Point	**Data set:** -	**Function diagram:** 1750, 8010, 8012, 8013
	P-Group: Messages	**Units group:** SPEED_ROT	**Unit selection:** -
	Min	**Max**	**Factory setting**
	- [1/min]	- [1/min]	- [1/min]

Description: Displays the smoothed actual speed/velocity for messages/signals.
Dependency: Refer to: p2153

r2169 **CO: Velocity actual value, smoothed signals / n_act smth message**

SERVO (Lin)	**Can be changed:** -		**Access level:** 2
	Data type: Floating Point	**Data set:** -	**Function diagram:** 1750, 8010, 8012, 8013
	P-Group: Messages	**Units group:** SPEED_LIN_METRIC_P3	**Unit selection:** -
	Min	**Max**	**Factory setting**
	- [m/min]	- [m/min]	- [m/min]

Description: Displays the smoothed actual speed/velocity for messages/signals.
Dependency: Refer to: p2153

p2174[0...n] **Torque threshold value 1 / M_thresh val 1**

SERVO, VECTOR	**Can be changed:** U, T		**Access level:** 2
	Data type: Floating Point	**Data set:** DDS	**Function diagram:** 8012
	P-Group: Messages	**Units group:** TORQUE	**Unit selection:** -
	Min	**Max**	**Factory setting**
	0.00 [Nm]	99999.00 [Nm]	5.13 [Nm]

Description: Sets the torque/force threshold value for the signal "Torque setpoint < torque threshold value 1" (BO: r2198.10).
Dependency: Refer to: p2195, r2198

p2174[0...n] **Force threshold value 1 / M_thresh val 1**

SERVO (Lin)	**Can be changed:** U, T		**Access level:** 2
	Data type: Floating Point	**Data set:** DDS	**Function diagram:** 8012
	P-Group: Messages	**Units group:** FORCE	**Unit selection:** -
	Min	**Max**	**Factory setting**
	0.00 [N]	99999.00 [N]	1000.00 [N]

Description: Sets the torque/force threshold value for the signal "Torque setpoint < torque threshold value 1" (BO: r2198.10).
Dependency: Refer to: p2195, r2198

p2175[0...n] **Motor locked speed threshold / Mot lock n_thresh**

SERVO, VECTOR	**Can be changed:** U, T		**Access level:** 3
	Data type: Floating Point	**Data set:** DDS	**Function diagram:** 8012
	P-Group: Messages	**Units group:** SPEED_ROT	**Unit selection:** -
	Min	**Max**	**Factory setting**
	0.00 [1/min]	210000.00 [1/min]	120.00 [1/min]

Description: Sets the speed/velocity threshold for the signal "Motor locked" (BO: r2198.6).
Dependency: Refer to: p2177, r2198

© Siemens AG, 2005. All rights reserved

p2175[0...n] Motor locked, velocity threshold / Mot lock n_thresh

SERVO (Lin)

Can be changed: U, T		**Access level:** 3
Data type: Floating Point	**Data set:** DDS	**Function diagram:** 8012
P-Group: Messages	**Units group:** SPEED_LIN_METRIC_P3	**Unit selection:** -
Min	**Max**	**Factory setting**
0.00 [m/min]	1000.00 [m/min]	1.20 [m/min]

Description: Sets the speed/velocity threshold for the signal "Motor locked" (BO: r2198.6).

Dependency: Refer to: p2177, r2198

p2177[0...n] Motor locked delay time / Mot lock t_del

SERVO, VECTOR

Can be changed: U, T		**Access level:** 2
Data type: Floating Point	**Data set:** DDS	**Function diagram:** 8012
P-Group: Messages	**Units group:** TIME	**Unit selection:** -
Min	**Max**	**Factory setting**
0.000 [s]	65.000 [s]	1.000 [s]

Description: Sets the delay time for the message "Motor locked" (BO: r2198.6).
If "Motor locked" is identified within this time, then ZSW2.6 is set and an appropriate fault is output.

Dependency: Refer to: p2175, r2198

p2178[0...n] Motor stalled delay time / Mot stall t_del

VECTOR

Can be changed: U, T		**Access level:** 3
Data type: Floating Point	**Data set:** DDS	**Function diagram:** 8012
P-Group: Messages	**Units group:** TIME	**Unit selection:** -
Min	**Max**	**Factory setting**
0.000 [s]	1.000 [s]	0.010 [s]

Description: Sets the delay time for the message "Motor stalled" (BO: r2198.7).
If "Motor stalled" is identified within this time, then ZSW2.7 is set and an appropriate fault is output.

Dependency: Refer to: r2198

p2181[0...n] Load monitoring, response / Load monit. resp.

SERVO (Extended msg), VECTOR (Extended msg)

Can be changed: U, T		**Access level:** 3
Data type: Integer16	**Data set:** DDS	**Function diagram:** 8013
P-Group: Messages	**Units group:** -	**Unit selection:** -
Min	**Max**	**Factory setting**
0	6	0

Description: Sets the response when evaluating the load monitoring.

Values:
0: Load monitoring disabled
1: A07920 for torque/speed too low
2: A07921 for torque/speed too high
3: A07922 for torque/speed out of tolerance
4: F07923 for torque/speed too low
5: F07924 for torque/speed too high
6: F07925 for torque/speed out of tolerance

Dependency: Refer to: p2182, p2183, p2184, p2185, p2186, p2187, p2188, p2189, p2190, r2198
Refer to: A07920, A07921, A07922, F07923, F07924, F07925

Note: The response to the faults F07923 ... F07925 can be set.

© Siemens AG, 2005. All rights reserved

p2182[0...n] Load monitoring, speed threshold value 1 / n_thresh 1

SERVO (Extended msg), VECTOR (Extended msg)

Can be changed: U, T		**Access level:** 3
Data type: Floating Point	**Data set:** DDS	**Function diagram:** 8013
P-Group: Messages	**Units group:** SPEED_ROT	**Unit selection:** -
Min	**Max**	**Factory setting**
0.00 [1/min]	210000.00 [1/min]	150.00 [1/min]

Description: Sets the speed/torque envelop curve for the load monitoring.
The envelope curve (upper and lower envelope curve) is defined as follows based on 3 speed thresholds:
p2182 (n_threshold 1) --> p2185 (M_threshold 1, upper), p2186 (M_threshold 1, lower)
p2183 (n_threshold 2) --> p2187 (M_threshold 2, upper), p2188 (M_threshold 2, lower)
p2184 (n_threshold 3) --> p2189 (M_threshold 3, upper), p2190 (M_threshold 3, lower)

Dependency: The following applies: p2182 < p2183 < p2184
Refer to: p2183, p2184, p2185, p2186
Refer to: A07926

p2182[0...n] Load monitoring, velocity threshold 1 / n_thresh 1

SERVO (Lin, Extended msg)

Can be changed: U, T		**Access level:** 3
Data type: Floating Point	**Data set:** DDS	**Function diagram:** 8013
P-Group: Messages	**Units group:** SPEED_LIN_METRIC_P3	**Unit selection:** -
Min	**Max**	**Factory setting**
0.00 [m/min]	1000.00 [m/min]	0.05 [m/min]

Description: Sets the speed/torque envelop curve for the load monitoring.
The envelope curve (upper and lower envelope curve) is defined as follows based on 3 speed thresholds:
p2182 (n_threshold 1) --> p2185 (M_threshold 1, upper), p2186 (M_threshold 1, lower)
p2183 (n_threshold 2) --> p2187 (M_threshold 2, upper), p2188 (M_threshold 2, lower)
p2184 (n_threshold 3) --> p2189 (M_threshold 3, upper), p2190 (M_threshold 3, lower)

Dependency: The following applies: p2182 < p2183 < p2184
Refer to: p2183, p2184, p2185, p2186
Refer to: A07926

p2183[0...n] Load monitoring, speed threshold value 2 / n_thresh 2

SERVO (Extended msg), VECTOR (Extended msg)

Can be changed: U, T		**Access level:** 3
Data type: Floating Point	**Data set:** DDS	**Function diagram:** 8013
P-Group: Messages	**Units group:** SPEED_ROT	**Unit selection:** -
Min	**Max**	**Factory setting**
0.00 [1/min]	210000.00 [1/min]	900.00 [1/min]

Description: Sets the speed/torque envelop curve for the load monitoring.
The envelope curve is defined as follows based on 3 speed thresholds:
p2182 (n_threshold 1) --> p2185 (M_threshold 1, upper), p2186 (M_threshold 1, lower)
p2183 (n_threshold 2) --> p2187 (M_threshold 2, upper), p2188 (M_threshold 2, lower)
p2184 (n_threshold 3) --> p2189 (M_threshold 3, upper), p2190 (M_threshold 3, lower)

Dependency: The following applies: p2182 < p2183 < p2184
Refer to: p2182, p2184, p2187, p2188
Refer to: A07926

© Siemens AG, 2005. All rights reserved

p2183[0...n] Load monitoring, velocity threshold 2 / n_thresh 2

SERVO (Lin, Extended msg)

Can be changed: U, T		**Access level:** 3
Data type: Floating Point	**Data set:** DDS	**Function diagram:** 8013
P-Group: Messages	**Units group:** SPEED_LIN_METRIC_P3	**Unit selection:** -
Min	**Max**	**Factory setting**
0.00 [m/min]	1000.00 [m/min]	0.05 [m/min]

Description: Sets the speed/torque envelop curve for the load monitoring.
The envelope curve is defined as follows based on 3 speed thresholds:
p2182 (n_threshold 1) --> p2185 (M_threshold 1, upper), p2186 (M_threshold 1, lower)
p2183 (n_threshold 2) --> p2187 (M_threshold 2, upper), p2188 (M_threshold 2, lower)
p2184 (n_threshold 3) --> p2189 (M_threshold 3, upper), p2190 (M_threshold 3, lower)

Dependency: The following applies: p2182 < p2183 < p2184
Refer to: p2182, p2184, p2187, p2188
Refer to: A07926

p2184[0...n] Load monitoring, speed threshold value 3 / n_thresh 3

SERVO (Extended msg), VECTOR (Extended msg)

Can be changed: U, T		**Access level:** 3
Data type: Floating Point	**Data set:** DDS	**Function diagram:** 8013
P-Group: Messages	**Units group:** SPEED_ROT	**Unit selection:** -
Min	**Max**	**Factory setting**
0.00 [1/min]	210000.00 [1/min]	1500.00 [1/min]

Description: Sets the speed/torque envelop curve for the load monitoring.
The envelope curve is defined as follows based on 3 speed thresholds:
p2182 (n_threshold 1) --> p2185 (M_threshold 1, upper), p2186 (M_threshold 1, lower)
p2183 (n_threshold 2) --> p2187 (M_threshold 2, upper), p2188 (M_threshold 2, lower)
p2184 (n_threshold 3) --> p2189 (M_threshold 3, upper), p2190 (M_threshold 3, lower)

Dependency: The following applies: p2182 < p2183 < p2184
Refer to: p2182, p2183, p2189, p2190
Refer to: A07926

p2184[0...n] Load monitoring, velocity threshold 3 / n_thresh 3

SERVO (Lin, Extended msg)

Can be changed: U, T		**Access level:** 3
Data type: Floating Point	**Data set:** DDS	**Function diagram:** 8013
P-Group: Messages	**Units group:** SPEED_LIN_METRIC_P3	**Unit selection:** -
Min	**Max**	**Factory setting**
0.00 [m/min]	1000.00 [m/min]	0.05 [m/min]

Description: Sets the speed/torque envelop curve for the load monitoring.
The envelope curve is defined as follows based on 3 speed thresholds:
p2182 (n_threshold 1) --> p2185 (M_threshold 1, upper), p2186 (M_threshold 1, lower)
p2183 (n_threshold 2) --> p2187 (M_threshold 2, upper), p2188 (M_threshold 2, lower)
p2184 (n_threshold 3) --> p2189 (M_threshold 3, upper), p2190 (M_threshold 3, lower)

Dependency: The following applies: p2182 < p2183 < p2184
Refer to: p2182, p2183, p2189, p2190
Refer to: A07926

© Siemens AG, 2005. All rights reserved

p2185[0...n] Load monitoring torque threshold 1, upper / M_thresh 1 upper

SERVO (Extended msg), VECTOR (Extended msg)

Can be changed: U, T		**Access level:** 3
Data type: Floating Point	**Data set:** DDS	**Function diagram:** 8013
P-Group: Messages	**Units group:** TORQUE	**Unit selection:** -
Min	**Max**	**Factory setting**
0.00 [Nm]	99999.00 [Nm]	99999.00 [Nm]

Description: Sets the speed/torque / velocity/force envelope curve for the load monitoring.

Dependency: The following applies: p2185 > p2186
Refer to: p2182, p2186
Refer to: A07926

p2185[0...n] Load monitoring force threshold 1, upper / M_thresh 1 upper

SERVO (Lin, Extended msg)

Can be changed: U, T		**Access level:** 3
Data type: Floating Point	**Data set:** DDS	**Function diagram:** 8013
P-Group: Messages	**Units group:** FORCE	**Unit selection:** -
Min	**Max**	**Factory setting**
0.00 [N]	100000.00 [N]	100000.00 [N]

Description: Sets the speed/torque / velocity/force envelope curve for the load monitoring.

Dependency: The following applies: p2185 > p2186
Refer to: p2182, p2186
Refer to: A07926

p2186[0...n] Load monitoring torque threshold 1, lower / M_thresh 1 lower

SERVO (Extended msg), VECTOR (Extended msg)

Can be changed: U, T		**Access level:** 3
Data type: Floating Point	**Data set:** DDS	**Function diagram:** 8013
P-Group: Messages	**Units group:** TORQUE	**Unit selection:** -
Min	**Max**	**Factory setting**
0.00 [Nm]	99999.00 [Nm]	0.00 [Nm]

Description: Sets the speed/torque / velocity/force envelope curve for the load monitoring.

Dependency: The following applies: p2186 < p2185
Refer to: p2182, p2185
Refer to: A07926

p2186[0...n] Load monitoring force threshold 1, lower / M_thresh 1 lower

SERVO (Lin, Extended msg)

Can be changed: U, T		**Access level:** 3
Data type: Floating Point	**Data set:** DDS	**Function diagram:** 8013
P-Group: Messages	**Units group:** FORCE	**Unit selection:** -
Min	**Max**	**Factory setting**
0.00 [N]	100000.00 [N]	0.00 [N]

Description: Sets the speed/torque / velocity/force envelope curve for the load monitoring.

Dependency: The following applies: p2186 < p2185
Refer to: p2182, p2185
Refer to: A07926

© Siemens AG, 2005. All rights reserved

p2187[0...n] Load monitoring torque threshold 2, upper / M_thresh 2 upper

SERVO (Extended msg), VECTOR (Extended msg)

Can be changed: U, T		**Access level:** 3
Data type: Floating Point	**Data set:** DDS	**Function diagram:** 8013
P-Group: Messages	**Units group:** TORQUE	**Unit selection:** -
Min	**Max**	**Factory setting**
0.00 [Nm]	99999.00 [Nm]	99999.00 [Nm]

Description: Sets the speed/torque / velocity/force envelope curve for the load monitoring.

Dependency: The following applies: p2187 > p2188
Refer to: p2183, p2188
Refer to: A07926

p2187[0...n] Load monitoring force threshold 2, upper / M_thresh 2 upper

SERVO (Lin, Extended msg)

Can be changed: U, T		**Access level:** 3
Data type: Floating Point	**Data set:** DDS	**Function diagram:** 8013
P-Group: Messages	**Units group:** FORCE	**Unit selection:** -
Min	**Max**	**Factory setting**
0.00 [N]	100000.00 [N]	100000.00 [N]

Description: Sets the speed/torque / velocity/force envelope curve for the load monitoring.

Dependency: The following applies: p2187 > p2188
Refer to: p2183, p2188
Refer to: A07926

p2188[0...n] Load monitoring torque threshold 2, lower / M_thresh 2 lower

SERVO (Extended msg), VECTOR (Extended msg)

Can be changed: U, T		**Access level:** 3
Data type: Floating Point	**Data set:** DDS	**Function diagram:** 8013
P-Group: Messages	**Units group:** TORQUE	**Unit selection:** -
Min	**Max**	**Factory setting**
0.00 [Nm]	99999.00 [Nm]	0.00 [Nm]

Description: Sets the speed/torque / velocity/force envelope curve for the load monitoring.

Dependency: The following applies: p2188 < p2187
Refer to: p2183, p2187
Refer to: A07926

p2188[0...n] Load monitoring force threshold 2, lower / M_thresh 2 lower

SERVO (Lin, Extended msg)

Can be changed: U, T		**Access level:** 3
Data type: Floating Point	**Data set:** DDS	**Function diagram:** 8013
P-Group: Messages	**Units group:** FORCE	**Unit selection:** -
Min	**Max**	**Factory setting**
0.00 [N]	100000.00 [N]	0.00 [N]

Description: Sets the speed/torque / velocity/force envelope curve for the load monitoring.

Dependency: The following applies: p2188 < p2187
Refer to: p2183, p2187
Refer to: A07926

© Siemens AG, 2005. All rights reserved

p2189[0...n] Load monitoring torque threshold 3, upper / M_thresh 3 upper

SERVO (Extended msg), VECTOR (Extended msg)

Can be changed: U, T		**Access level:** 3
Data type: Floating Point	**Data set:** DDS	**Function diagram:** 8013
P-Group: Messages	**Units group:** TORQUE	**Unit selection:** -
Min	**Max**	**Factory setting**
0.00 [Nm]	99999.00 [Nm]	99999.00 [Nm]

Description: Sets the speed/torque / velocity/force envelope curve for the load monitoring.

Dependency: The following applies: p2189 > p2190
Refer to: p2184, p2190
Refer to: A07926

p2189[0...n] Load monitoring force threshold 3, upper / M_thresh 3 upper

SERVO (Lin, Extended msg)

Can be changed: U, T		**Access level:** 3
Data type: Floating Point	**Data set:** DDS	**Function diagram:** 8013
P-Group: Messages	**Units group:** FORCE	**Unit selection:** -
Min	**Max**	**Factory setting**
0.00 [N]	100000.00 [N]	100000.00 [N]

Description: Sets the speed/torque / velocity/force envelope curve for the load monitoring.

Dependency: The following applies: p2189 > p2190
Refer to: p2184, p2190
Refer to: A07926

p2190[0...n] Load monitoring torque threshold 3, lower / M_thresh 3 lower

SERVO (Extended msg), VECTOR (Extended msg)

Can be changed: U, T		**Access level:** 3
Data type: Floating Point	**Data set:** DDS	**Function diagram:** 8013
P-Group: Messages	**Units group:** TORQUE	**Unit selection:** -
Min	**Max**	**Factory setting**
0.00 [Nm]	99999.00 [Nm]	0.00 [Nm]

Description: Sets the speed/torque / velocity/force envelope curve for the load monitoring.

Dependency: The following applies: p2190 < p2189
Refer to: p2184, p2189
Refer to: A07926

p2190[0...n] Load monitoring force threshold 3, lower / M_thresh 3 lower

SERVO (Lin, Extended msg)

Can be changed: U, T		**Access level:** 3
Data type: Floating Point	**Data set:** DDS	**Function diagram:** 8013
P-Group: Messages	**Units group:** FORCE	**Unit selection:** -
Min	**Max**	**Factory setting**
0.00 [N]	100000.00 [N]	0.00 [N]

Description: Sets the speed/torque / velocity/force envelope curve for the load monitoring.

Dependency: The following applies: p2190 < p2189
Refer to: p2184, p2189
Refer to: A07926

© Siemens AG, 2005. All rights reserved

p2192[0...n] Load monitoring, delay time / Load monit t_del

SERVO (Extended msg), VECTOR (Extended msg)

Can be changed: U, T | **Access level:** 3
Data type: Floating Point | **Data set:** DDS | **Function diagram:** 8013
P-Group: Messages | **Units group:** TIME | **Unit selection:** -

Min	Max	Factory setting
0.00 [s]	65.00 [s]	10.00 [s]

Description: Sets the delay time to evaluate the load monitoring.

p2194[0...n] Torque threshold value 2 / M_thresh val 2

SERVO, VECTOR

Can be changed: U, T | **Access level:** 2
Data type: Floating Point | **Data set:** DDS | **Function diagram:** 8012
P-Group: Messages | **Units group:** PERCENT | **Unit selection:** -

Min	Max	Factory setting
0.00 [%]	100.00 [%]	90.00 [%]

Description: Sets the torque/force threshold value for the signal "Torque utilization < torque threshold value 2" (BO: r2199.11).
Dependency: Refer to: r0033, p2195, r2199

p2195[0...n] Torque utilization switch-off delay / M_util t_off

SERVO

Can be changed: U, T | **Access level:** 2
Data type: Floating Point | **Data set:** DDS | **Function diagram:** 8012
P-Group: Messages | **Units group:** TIME_M3 | **Unit selection:** -

Min	Max	Factory setting
0.0 [ms]	1000.0 [ms]	800.0 [ms]

Description: Sets the power-down delay time for the negated signal "Ramp-up completed".
The evaluation of the message "Torque setpoint < p2174" (BO: r2198.10) and "Torque utilization < p2194" (BO: r2199.11) is only realized after ramp-up has been completed and the delay time has expired.
Dependency: Refer to: p2174, p2194

r2197 CO/BO: Status word monitoring 1 / ZSW monitor 1

SERVO, VECTOR

Can be changed: - | **Access level:** 2
Data type: Unsigned16 | **Data set:** - | **Function diagram:** 1530, 2534
P-Group: Messages | **Units group:** - | **Unit selection:** -

Min	Max	Factory setting
-	-	-

Description: Displays the first status word for monitoring functions.

Bit field:

Bit	Signal name	0 signal	1 signal	FP
01	|n_act| <= speed threshold value 2	No	Yes	8010
02	|n_act| > speed threshold value 2	No	Yes	8010
03	n_act >= 0	No	Yes	8010
06	n_act > n_max	No	Yes	8010
07	Speed setp - act val deviation in tolerance t_off	No	Yes	8010

Note: Re bit 01, 02:
The speed threshold value 2 is set in p2155.

© Siemens AG, 2005. All rights reserved

r2198 CO/BO: Status word monitoring 2 / ZSW monitor 2

SERVO, VECTOR

Can be changed: -
Access level: 2
Data type: Unsigned16
Data set: -
Function diagram: 1530, 2536
P-Group: Messages
Units group: -
Unit selection: -

Min	Max	Factory setting
-	-	-

Description: Displays the second status word for monitoring functions.

Bit field:

Bit	Signal name	0 signal	1 signal	FP
04	|n_set| < p2161	No	Yes	8010
05	n_set > 0	No	Yes	8010
06	Motor locked	No	Yes	8012
07	Motor stalled	No	Yes	8012
10	Torque setpoint < torque threshold value 1	No	Yes	8012
11	Load monitoring signals an alarm	No	Yes	8013
12	Load monitoring signals a fault condition	No	Yes	8013

Note: Re bit 10:
The torque threshold value 1 is set in p2174.
Re bit 07:
For servo drives, bit 07 is not used and is always inactive.

r2199 CO/BO: Status word monitoring 3 / ZSW monitor 3

SERVO, VECTOR

Can be changed: -
Access level: 2
Data type: Unsigned16
Data set: -
Function diagram: 1530, 2536
P-Group: Messages
Units group: -
Unit selection: -

Min	Max	Factory setting
-	-	-

Description: Displays the third status word for monitoring functions.

Bit field:

Bit	Signal name	0 signal	1 signal	FP
00	|n_act| < speed threshold value 3	No	Yes	8010
01	f or n comparison value reached or exceeded	No	Yes	8010
04	Speed setp - act val deviation in tolerance t_on	No	Yes	8010
05	Ramp-up/ramp-down completed	No	Yes	8010
11	Torque utilization < torque threshold value 2	No	Yes	8012

Note: Re bit 00:
The speed threshold value 3 is set in p2161.
Re bit 01:
The comparison value is set in p2141.
Re bit 11:
The torque threshold value 2 is set in p2194.

p2200[0...n] BI: Technology controller enable / Tec_ctr enable

SERVO (Tech_ctrl), VECTOR (Tech_ctrl)

Can be changed: U, T
Access level: 2
Data type: Unsigned32
Data set: CDS
Function diagram: 7958
P-Group: Technology
Units group: -
Unit selection: -

Min	Max	Factory setting
-	-	0

Description: Sets the signal source to switch-in/switch-out the technology controller.
The technology controller is switched-in with a 1 signal.

© Siemens AG, 2005. All rights reserved

p2201[0...n] CO: Technology controller, fixed value 1 / Tec_ctr fix val 1

SERVO (Tech_ctrl), VECTOR (Tech_ctrl)

Can be changed: U, T — **Access level:** 2
Data type: Floating Point — **Data set:** DDS — **Function diagram:** 7950
P-Group: Technology — **Units group:** PERCENT — **Unit selection:** -

Min	Max	Factory setting
-200.00 [%]	200.00 [%]	10.00 [%]

Description: Sets the value for fixed value 1 of the technology controller.
Dependency: Refer to: p2220, p2221, p2222, p2223, r2224, r2229

p2202[0...n] CO: Technology controller, fixed value 2 / Tec_ctr fix val 2

SERVO (Tech_ctrl), VECTOR (Tech_ctrl)

Can be changed: U, T — **Access level:** 2
Data type: Floating Point — **Data set:** DDS — **Function diagram:** 7950
P-Group: Technology — **Units group:** PERCENT — **Unit selection:** -

Min	Max	Factory setting
-200.00 [%]	200.00 [%]	20.00 [%]

Description: Sets the value for fixed value 2 of the technology controller.
Dependency: Refer to: p2220, p2221, p2222, p2223, r2224, r2229

p2203[0...n] CO: Technology controller, fixed value 3 / Tec_ctr fix val 3

SERVO (Tech_ctrl), VECTOR (Tech_ctrl)

Can be changed: U, T — **Access level:** 2
Data type: Floating Point — **Data set:** DDS — **Function diagram:** 7950
P-Group: Technology — **Units group:** PERCENT — **Unit selection:** -

Min	Max	Factory setting
-200.00 [%]	200.00 [%]	30.00 [%]

Description: Sets the value for fixed value 3 of the technology controller.
Dependency: Refer to: p2220, p2221, p2222, p2223, r2224, r2229

p2204[0...n] CO: Technology controller, fixed value 4 / Tec_ctr fix val 4

SERVO (Tech_ctrl), VECTOR (Tech_ctrl)

Can be changed: U, T — **Access level:** 2
Data type: Floating Point — **Data set:** DDS — **Function diagram:** 7950
P-Group: Technology — **Units group:** PERCENT — **Unit selection:** -

Min	Max	Factory setting
-200.00 [%]	200.00 [%]	40.00 [%]

Description: Sets the value for fixed value 4 of the technology controller.
Dependency: Refer to: p2220, p2221, p2222, p2223, r2224, r2229

p2205[0...n] CO: Technology controller, fixed value 5 / Tec_ctr fix val 5

SERVO (Tech_ctrl), VECTOR (Tech_ctrl)

Can be changed: U, T — **Access level:** 2
Data type: Floating Point — **Data set:** DDS — **Function diagram:** 7950
P-Group: Technology — **Units group:** PERCENT — **Unit selection:** -

Min	Max	Factory setting
-200.00 [%]	200.00 [%]	50.00 [%]

Description: Sets the value for fixed value 5 of the technology controller.
Dependency: Refer to: p2220, p2221, p2222, p2223, r2224, r2229

© Siemens AG, 2005. All rights reserved

p2206[0...n] CO: Technology controller, fixed value 6 / Tec_ctr fix val 6

SERVO (Tech_ctrl), VECTOR (Tech_ctrl)

Can be changed: U, T		**Access level:** 2
Data type: Floating Point	**Data set:** DDS	**Function diagram:** 7950
P-Group: Technology	**Units group:** PERCENT	**Unit selection:** -
Min	**Max**	**Factory setting**
-200.00 [%]	200.00 [%]	60.00 [%]

Description: Sets the value for fixed value 6 of the technology controller.
Dependency: Refer to: p2220, p2221, p2222, p2223, r2224, r2229

p2207[0...n] CO: Technology controller, fixed value 7 / Tec_ctr fix val 7

SERVO (Tech_ctrl), VECTOR (Tech_ctrl)

Can be changed: U, T		**Access level:** 2
Data type: Floating Point	**Data set:** DDS	**Function diagram:** 7950
P-Group: Technology	**Units group:** PERCENT	**Unit selection:** -
Min	**Max**	**Factory setting**
-200.00 [%]	200.00 [%]	70.00 [%]

Description: Sets the value for fixed value 7 of the technology controller.
Dependency: Refer to: p2220, p2221, p2222, p2223, r2224, r2229

p2208[0...n] CO: Technology controller, fixed value 8 / Tec_ctr fix val 8

SERVO (Tech_ctrl), VECTOR (Tech_ctrl)

Can be changed: U, T		**Access level:** 2
Data type: Floating Point	**Data set:** DDS	**Function diagram:** 7950
P-Group: Technology	**Units group:** PERCENT	**Unit selection:** -
Min	**Max**	**Factory setting**
-200.00 [%]	200.00 [%]	80.00 [%]

Description: Sets the value for fixed value 8 of the technology controller.
Dependency: Refer to: p2220, p2221, p2222, p2223, r2224, r2229

p2209[0...n] CO: Technology controller, fixed value 9 / Tec_ctr fix val 9

SERVO (Tech_ctrl), VECTOR (Tech_ctrl)

Can be changed: U, T		**Access level:** 2
Data type: Floating Point	**Data set:** DDS	**Function diagram:** 7950
P-Group: Technology	**Units group:** PERCENT	**Unit selection:** -
Min	**Max**	**Factory setting**
-200.00 [%]	200.00 [%]	90.00 [%]

Description: Sets the value for fixed value 9 of the technology controller.
Dependency: Refer to: p2220, p2221, p2222, p2223, r2224, r2229

p2210[0...n] CO: Technology controller, fixed value 10 / Tec_ctr fix val 10

SERVO (Tech_ctrl), VECTOR (Tech_ctrl)

Can be changed: U, T		**Access level:** 2
Data type: Floating Point	**Data set:** DDS	**Function diagram:** 7950
P-Group: Technology	**Units group:** PERCENT	**Unit selection:** -
Min	**Max**	**Factory setting**
-200.00 [%]	200.00 [%]	100.00 [%]

Description: Sets the value for fixed value 10 of the technology controller.
Dependency: Refer to: p2220, p2221, p2222, p2223, r2224, r2229

© Siemens AG, 2005. All rights reserved

p2211[0...n] CO: Technology controller, fixed value 11 / Tec_ctr fix val 11

SERVO (Tech_ctrl), VECTOR (Tech_ctrl)

Can be changed: U, T | **Access level:** 2
Data type: Floating Point | **Data set:** DDS | **Function diagram:** 7950
P-Group: Technology | **Units group:** PERCENT | **Unit selection:** -

Min	Max	Factory setting
-200.00 [%]	200.00 [%]	110.00 [%]

Description: Sets the value for fixed value 11 of the technology controller.
Dependency: Refer to: p2220, p2221, p2222, p2223, r2224, r2229

p2212[0...n] CO: Technology controller, fixed value 12 / Tec_ctr fix val 12

SERVO (Tech_ctrl), VECTOR (Tech_ctrl)

Can be changed: U, T | **Access level:** 2
Data type: Floating Point | **Data set:** DDS | **Function diagram:** 7950
P-Group: Technology | **Units group:** PERCENT | **Unit selection:** -

Min	Max	Factory setting
-200.00 [%]	200.00 [%]	120.00 [%]

Description: Sets the value for fixed value 12 of the technology controller.
Dependency: Refer to: p2220, p2221, p2222, p2223, r2224, r2229

p2213[0...n] CO: Technology controller, fixed value 13 / Tec_ctr fix val 13

SERVO (Tech_ctrl), VECTOR (Tech_ctrl)

Can be changed: U, T | **Access level:** 2
Data type: Floating Point | **Data set:** DDS | **Function diagram:** 7950
P-Group: Technology | **Units group:** PERCENT | **Unit selection:** -

Min	Max	Factory setting
-200.00 [%]	200.00 [%]	130.00 [%]

Description: Sets the value for fixed value 13 of the technology controller.
Dependency: Refer to: p2220, p2221, p2222, p2223, r2224, r2229

p2214[0...n] CO: Technology controller, fixed value 14 / Tec_ctr fix val 14

SERVO (Tech_ctrl), VECTOR (Tech_ctrl)

Can be changed: U, T | **Access level:** 2
Data type: Floating Point | **Data set:** DDS | **Function diagram:** 7950
P-Group: Technology | **Units group:** PERCENT | **Unit selection:** -

Min	Max	Factory setting
-200.00 [%]	200.00 [%]	140.00 [%]

Description: Sets the value for fixed value 14 of the technology controller.
Dependency: Refer to: p2220, p2221, p2222, p2223, r2224, r2229

p2215[0...n] CO: Technology controller, fixed value 15 / Tec_ctr fix val 15

SERVO (Tech_ctrl), VECTOR (Tech_ctrl)

Can be changed: U, T | **Access level:** 2
Data type: Floating Point | **Data set:** DDS | **Function diagram:** 7950
P-Group: Technology | **Units group:** PERCENT | **Unit selection:** -

Min	Max	Factory setting
-200.00 [%]	200.00 [%]	150.00 [%]

Description: Sets the value for fixed value 15 of the technology controller.
Dependency: Refer to: p2220, p2221, p2222, p2223, r2224, r2229

© Siemens AG, 2005. All rights reserved

p2220[0...n] BI: Technology controller fixed value selection bit 0 / Tec_ctr sel bit 0

SERVO (Tech_ctrl), VECTOR (Tech_ctrl)

Can be changed: T		**Access level:** 3
Data type: Unsigned32	**Data set:** CDS	**Function diagram:** 7950
P-Group: Commands	**Units group:** -	**Unit selection:** -
Min	**Max**	**Factory setting**
-	-	0

Description: Sets the signal source to select the fixed value of the technology controller.
Dependency: Refer to: p2221, p2222, p2223

p2221[0...n] BI: Technology controller fixed value selection bit 1 / Tec_ctr sel bit 1

SERVO (Tech_ctrl), VECTOR (Tech_ctrl)

Can be changed: T		**Access level:** 3
Data type: Unsigned32	**Data set:** CDS	**Function diagram:** 7950
P-Group: Commands	**Units group:** -	**Unit selection:** -
Min	**Max**	**Factory setting**
-	-	0

Description: Sets the signal source to select the fixed value of the technology controller.
Dependency: Refer to: p2220, p2222, p2223

p2222[0...n] BI: Technology controller fixed value selection bit 2 / Tec_ctr sel bit 2

SERVO (Tech_ctrl), VECTOR (Tech_ctrl)

Can be changed: T		**Access level:** 3
Data type: Unsigned32	**Data set:** CDS	**Function diagram:** 7950
P-Group: Commands	**Units group:** -	**Unit selection:** -
Min	**Max**	**Factory setting**
-	-	0

Description: Sets the signal source to select the fixed value of the technology controller.
Dependency: Refer to: p2220, p2221, p2223

p2223[0...n] BI: Technology controller fixed value selection bit 3 / Tec_ctr sel bit 3

SERVO (Tech_ctrl), VECTOR (Tech_ctrl)

Can be changed: T		**Access level:** 3
Data type: Unsigned32	**Data set:** CDS	**Function diagram:** 7950
P-Group: Commands	**Units group:** -	**Unit selection:** -
Min	**Max**	**Factory setting**
-	-	0

Description: Sets the signal source to select the fixed value of the technology controller.
Dependency: Refer to: p2220, p2221, p2222

r2224 CO: Technology controller, fixed value effective / Tec_ctr FixVal eff

SERVO (Tech_ctrl), VECTOR (Tech_ctrl)

Can be changed: -		**Access level:** 2
Data type: Floating Point	**Data set:** -	**Function diagram:** 7950
P-Group: Technology	**Units group:** PERCENT	**Unit selection:** -
Min	**Max**	**Factory setting**
- [%]	- [%]	- [%]

Description: Displays the selected and effective fixed value of the technology controller.
Dependency: Refer to: r2229

© Siemens AG, 2005. All rights reserved

r2229 Technology controller current number / Tec_ctrl No. act

SERVO (Tech_ctrl), VECTOR (Tech_ctrl)

Can be changed: -		**Access level:** 2
Data type: Unsigned32	**Data set:** -	**Function diagram:** 7950
P-Group: Technology	**Units group:** -	**Unit selection:** -
Min	**Max**	**Factory setting**
-	-	-

Description: Displays the number of the selected fixed setpoint of the technology controller.

Dependency: Refer to: r2224

p2230[0...n] Technology controller motorized potentiometer configuration / Tec_ctr mop config

SERVO (Tech_ctrl), VECTOR (Tech_ctrl)

Can be changed: U, T		**Access level:** 3
Data type: Unsigned32	**Data set:** DDS	**Function diagram:** 7954
P-Group: Technology	**Units group:** -	**Unit selection:** -
Min	**Max**	**Factory setting**
0000 bin	1111 bin	0110 bin

Description: Sets the configuration for the motorized potentiometer of the technology controller.

Bit field:

Bit	Signal name	0 signal	1 signal	FP
00	Data save active	No	Yes	-
02	Initial rounding-off active	No	Yes	-
03	Non-volatile data save active for p2230 = 1	No	Yes	-

Dependency: Refer to: r2231, p2240

Note: Re bit 00:

0: The setpoint for the motorized potentiometer is not saved and after ON is entered using p2240.

1: The setpoint for the motorized potentiometer is saved and after ON is entered using r2231. In order to save in a non-volatile fashion, bit 03 should be set to 1.

Re bit 02:

0: Without initial rounding-off

1: With initial rounding-off. The selected ramp-up/down time is correspondingly exceeded.

Re bit 03:

0: Non-volatile data save de-activated.

1: The setpoint for the motorized potentiometer is saved in a non-volatile fashion (for p2230.0 = 1).

The following prerequisites must be fulfilled in order to be able to save the setpoint in a non-volatile fashion:

- Firmware with V2.3 or higher.
- Control Unit 320 (CU320) with hardware version C or higher (module with NVRAM).

r2231 Technology controller motorized potentiometer setpoint memory / Tec_ctrl mop mem

SERVO (Tech_ctrl), VECTOR (Tech_ctrl)

Can be changed: -		**Access level:** 2
Data type: Floating Point	**Data set:** -	**Function diagram:** 7954
P-Group: Technology	**Units group:** PERCENT	**Unit selection:** -
Min	**Max**	**Factory setting**
- [%]	- [%]	- [%]

Description: Displays the setpoint memory for the motorized potentiometer of the technology controller.

For p2230.0 = 1, the last setpoint that was saved is entered after ON.

Dependency: Refer to: p2230

© Siemens AG, 2005. All rights reserved

p2235[0...n] BI: Technology controller motorized potentiometer, raise setpoint / Tec_ctr mop raise

SERVO (Tech_ctrl), VECTOR (Tech_ctrl)

Can be changed: T		**Access level:** 3
Data type: Unsigned32	**Data set:** CDS	**Function diagram:** 7954
P-Group: Commands	**Units group:** -	**Unit selection:** -
Min	**Max**	**Factory setting**
-	-	0

Description: Sets the signal source to increase the setpoint for the motorized potentiometer of the technology controller.
Dependency: Refer to: p2236

p2236[0...n] BI: Technology controller motorized potentiometer, lower setpoint / Tec_ctr mop lower

SERVO (Tech_ctrl), VECTOR (Tech_ctrl)

Can be changed: T		**Access level:** 3
Data type: Unsigned32	**Data set:** CDS	**Function diagram:** 7954
P-Group: Commands	**Units group:** -	**Unit selection:** -
Min	**Max**	**Factory setting**
-	-	0

Description: Sets the signal source to reduce the setpoint for the motorized potentiometer of the technology controller.
Dependency: Refer to: p2235

p2237[0...n] Technology controller motorized potentiometer maximum value / Tec_ctr mop max

SERVO (Tech_ctrl), VECTOR (Tech_ctrl)

Can be changed: U, T		**Access level:** 2
Data type: Floating Point	**Data set:** DDS	**Function diagram:** 7954
P-Group: Technology	**Units group:** PERCENT	**Unit selection:** -
Min	**Max**	**Factory setting**
-200.00 [%]	200.00 [%]	100.00 [%]

Description: Sets the maximum value for the motorized potentiometer of the technology controller.
Dependency: Refer to: p2238

p2238[0...n] Technology controller motorized potentiometer minimum value / Tec_ctr mop min

SERVO (Tech_ctrl), VECTOR (Tech_ctrl)

Can be changed: U, T		**Access level:** 2
Data type: Floating Point	**Data set:** DDS	**Function diagram:** 7954
P-Group: Technology	**Units group:** PERCENT	**Unit selection:** -
Min	**Max**	**Factory setting**
-200.00 [%]	200.00 [%]	-100.00 [%]

Description: Sets the minimum value for the motorized potentiometer of the technology controller.
Dependency: Refer to: p2237

p2240[0...n] Technology controller motorized potentiometer starting value / Tec_ctrl mop start

SERVO (Tech_ctrl), VECTOR (Tech_ctrl)

Can be changed: U, T		**Access level:** 2
Data type: Floating Point	**Data set:** DDS	**Function diagram:** 7954
P-Group: Technology	**Units group:** PERCENT	**Unit selection:** -
Min	**Max**	**Factory setting**
-200.00 [%]	200.00 [%]	0.00 [%]

Description: Sets the starting value for the motorized potentiometer of the technology controller.
For p2230.0 = 0, this setpoint is entered after ON.
Dependency: Refer to: p2230

© Siemens AG, 2005. All rights reserved

r2245 CO: Technology controller mot. potentiometer setpoint before RFG / Tec_ctr mop b. RFG

SERVO (Tech_ctrl), VECTOR (Tech_ctrl)

Can be changed: -		**Access level:** 2
Data type: Floating Point	**Data set:** -	**Function diagram:** 7954
P-Group: Technology	**Units group:** PERCENT	**Unit selection:** -
Min	**Max**	**Factory setting**
- [%]	- [%]	- [%]

Description: Sets the effective setpoint in front of the internal motorized potentiometer ramp-function generator of the technology controller.

Dependency: Refer to: r2250

p2247[0...n] Technology controller motorized potentiometer ramp-up time / Tec_ctr mop t_r-up

SERVO (Tech_ctrl), VECTOR (Tech_ctrl)

Can be changed: U, T		**Access level:** 2
Data type: Floating Point	**Data set:** DDS	**Function diagram:** 7954
P-Group: Technology	**Units group:** TIME	**Unit selection:** -
Min	**Max**	**Factory setting**
0.0 [s]	1000.0 [s]	10.0 [s]

Description: Sets the ramp-up time for the internal ramp-function generator for the motorized potentiometer of the technology controller.

Dependency: Refer to: p2248

Note: The time is referred to 100 %.

When the initial rounding-off is activated (p2230.2 = 1) the ramp-up is correspondingly extended.

p2248[0...n] Technology controller motorized potentiometer ramp-down time / Tec_ctrMop t_rdown

SERVO (Tech_ctrl), VECTOR (Tech_ctrl)

Can be changed: U, T		**Access level:** 2
Data type: Floating Point	**Data set:** DDS	**Function diagram:** 7954
P-Group: Technology	**Units group:** TIME	**Unit selection:** -
Min	**Max**	**Factory setting**
0.0 [s]	1000.0 [s]	10.0 [s]

Description: Sets the ramp-down time for the internal ramp-function generator for the motorized potentiometer of the technology controller.

Dependency: Refer to: p2247

Note: The time is referred to 100 %.

When the initial rounding-off is activated (p2230.2 = 1) the ramp-down is correspondingly extended.

r2250 CO: Technology controller motorized potentiometer setpoint after RFG / Tec_ctr mop a. RFG

SERVO (Tech_ctrl), VECTOR (Tech_ctrl)

Can be changed: -		**Access level:** 2
Data type: Floating Point	**Data set:** -	**Function diagram:** 7954
P-Group: Technology	**Units group:** PERCENT	**Unit selection:** -
Min	**Max**	**Factory setting**
- [%]	- [%]	- [%]

Description: Displays the effective setpoint after the internal ramp-function generator for the motorized potentiometer of the technology controller.

Dependency: Refer to: r2245

© Siemens AG, 2005. All rights reserved

p2253[0...n] CI: Technology controller setpoint 1 / Tec_ctr setpoint 1

SERVO (Tech_ctrl), VECTOR (Tech_ctrl)

Can be changed: U, T		**Access level:** 2
Data type: Unsigned32	**Data set:** CDS	**Function diagram:** 7958
P-Group: Technology	**Units group:** -	**Unit selection:** -
Min	**Max**	**Factory setting**
-	-	0

Description: Sets the signal source for the setpoint 1 of the technology controller.
Dependency: Refer to: p2254, p2255

p2254[0...n] CI: Technology controller setpoint 2 / Tec_ctr setpoint 2

SERVO (Tech_ctrl), VECTOR (Tech_ctrl)

Can be changed: U, T		**Access level:** 3
Data type: Unsigned32	**Data set:** CDS	**Function diagram:** 7958
P-Group: Technology	**Units group:** -	**Unit selection:** -
Min	**Max**	**Factory setting**
-	-	0

Description: Sets the signal source for the setpoint 2 of the technology controller.
Dependency: Refer to: p2253, p2256

p2255 Technology controller setpoint 1 scaling / Tec_ctr set1 scal.

SERVO (Tech_ctrl), VECTOR (Tech_ctrl)

Can be changed: U, T		**Access level:** 3
Data type: Floating Point	**Data set:** -	**Function diagram:** 7958
P-Group: Technology	**Units group:** PERCENT	**Unit selection:** -
Min	**Max**	**Factory setting**
0.00 [%]	100.00 [%]	100.00 [%]

Description: Sets the scaling for the setpoint 1 of the technology controller.
Dependency: Refer to: p2253

p2256 Technology controller setpoint 2 scaling / Tec_ctr set2 scal.

SERVO (Tech_ctrl), VECTOR (Tech_ctrl)

Can be changed: U, T		**Access level:** 3
Data type: Floating Point	**Data set:** -	**Function diagram:** 7958
P-Group: Technology	**Units group:** PERCENT	**Unit selection:** -
Min	**Max**	**Factory setting**
0.00 [%]	100.00 [%]	100.00 [%]

Description: Sets the scaling for the setpoint 2 of the technology controller.
Dependency: Refer to: p2254

p2257 Technology controller, ramp-up time / Tec_ctr t_ramp-up

SERVO (Tech_ctrl), VECTOR (Tech_ctrl)

Can be changed: U, T		**Access level:** 2
Data type: Floating Point	**Data set:** -	**Function diagram:** 7958
P-Group: Technology	**Units group:** TIME	**Unit selection:** -
Min	**Max**	**Factory setting**
0.00 [s]	650.00 [s]	1.00 [s]

Description: Sets the ramp-up time of the technology controller.
Dependency: Refer to: p2258
Note: The ramp-up time is referred to 100 %.

© Siemens AG, 2005. All rights reserved

p2258 Technology controller ramp-down time / Tec_ctr t_ramp-dn

SERVO (Tech_ctrl), VECTOR (Tech_ctrl)

Can be changed: U, T		**Access level:** 2
Data type: Floating Point	**Data set:** -	**Function diagram:** 7958
P-Group: Technology	**Units group:** TIME	**Unit selection:** -
Min	**Max**	**Factory setting**
0.00 [s]	650.00 [s]	1.00 [s]

Description: Sets the ramp-down time of the technology controller.
Dependency: Refer to: p2257
Note: The ramp-down time is referred to 100 %.

r2260 CO: Technology controller setpoint after ramp-function generator / Tec_ctr set a. RFG

SERVO (Tech_ctrl), VECTOR (Tech_ctrl)

Can be changed: -		**Access level:** 2
Data type: Floating Point	**Data set:** -	**Function diagram:** 7958
P-Group: Technology	**Units group:** PERCENT	**Unit selection:** -
Min	**Max**	**Factory setting**
- [%]	- [%]	- [%]

Description: Sets the setpoint after the ramp-function generator of the technology controller.

p2261 Technology controller setpoint filter time constant / Tec_ctr set T

SERVO (Tech_ctrl), VECTOR (Tech_ctrl)

Can be changed: U, T		**Access level:** 3
Data type: Floating Point	**Data set:** -	**Function diagram:** 7958
P-Group: Technology	**Units group:** TIME	**Unit selection:** -
Min	**Max**	**Factory setting**
0.00 [s]	60.00 [s]	0.00 [s]

Description: Sets the time constant for the setpoint filter (PT1) of the technology controller.

r2262 CO: Technology controller setpoint after filter / Tec_ctr set a. flt

SERVO (Tech_ctrl), VECTOR (Tech_ctrl)

Can be changed: -		**Access level:** 3
Data type: Floating Point	**Data set:** -	**Function diagram:** 7958
P-Group: Technology	**Units group:** PERCENT	**Unit selection:** -
Min	**Max**	**Factory setting**
- [%]	- [%]	- [%]

Description: Displays the smoothed setpoint after the setpoint filter (PT1) of the technology controller.

p2263 Technology controller type / Tec_ctr type

SERVO (Tech_ctrl), VECTOR (Tech_ctrl)

Can be changed: T		**Access level:** 3
Data type: Integer16	**Data set:** -	**Function diagram:** 7958
P-Group: Technology	**Units group:** -	**Unit selection:** -
Min	**Max**	**Factory setting**
0	1	0

Description: Sets the technology controller type.
Values:
0: D component in the actual value signal
1: D component in the fault signal

© Siemens AG, 2005. All rights reserved

p2264[0...n] CI: Technology controller actual value / Tec_ctr act val

SERVO (Tech_ctrl), VECTOR (Tech_ctrl)

Can be changed: U, T		**Access level:** 2
Data type: Unsigned32	**Data set:** CDS	**Function diagram:** 7958
P-Group: Technology	**Units group:** -	**Unit selection:** -
Min	**Max**	**Factory setting**
-	-	0

Description: Sets the signal source for the actual value of the technology controller.

p2265 Technology controller actual value filter time constant / Tec_ctr act T

SERVO (Tech_ctrl), VECTOR (Tech_ctrl)

Can be changed: U, T		**Access level:** 2
Data type: Floating Point	**Data set:** -	**Function diagram:** 7958
P-Group: Technology	**Units group:** TIME	**Unit selection:** -
Min	**Max**	**Factory setting**
0.00 [s]	60.00 [s]	0.00 [s]

Description: Sets the time constant for the actual value filter (PT1) of the technology controller.

r2266 CO: Technology controller actual value after filter / Tec_ctr act a. flt

SERVO (Tech_ctrl), VECTOR (Tech_ctrl)

Can be changed: -		**Access level:** 2
Data type: Floating Point	**Data set:** -	**Function diagram:** 7958
P-Group: Technology	**Units group:** PERCENT	**Unit selection:** -
Min	**Max**	**Factory setting**
- [%]	- [%]	- [%]

Description: Displays the smoothed actual value after the filter (PT1) of the technology controller

r2273 CO: Technology controller error / Tec_ctr error

SERVO (Tech_ctrl), VECTOR (Tech_ctrl)

Can be changed: -		**Access level:** 2
Data type: Floating Point	**Data set:** -	**Function diagram:** 7958
P-Group: Technology	**Units group:** PERCENT	**Unit selection:** -
Min	**Max**	**Factory setting**
- [%]	- [%]	- [%]

Description: Displays the error (system deviation) between the setpoint and actual value of the technology controller.
Dependency: Refer to: p2263

p2274 Technology controller differentiation, time constant / Tec_ctr T diff

SERVO (Tech_ctrl), VECTOR (Tech_ctrl)

Can be changed: U, T		**Access level:** 2
Data type: Floating Point	**Data set:** -	**Function diagram:** 7958
P-Group: Technology	**Units group:** TIME	**Unit selection:** -
Min	**Max**	**Factory setting**
0.000 [s]	60.000 [s]	0.000 [s]

Description: Sets the time constant for the differentiation (D component) of the technology controller.
Note: p2274 = 0: Differentiation is disabled.

© Siemens AG, 2005. All rights reserved

p2280 Technology controller proportional gain / Tec_ctr Kp

SERVO (Tech_ctrl), VECTOR (Tech_ctrl)

Can be changed: U, T		**Access level:** 2
Data type: Floating Point	**Data set:** -	**Function diagram:** 7958
P-Group: Technology	**Units group:** -	**Unit selection:** -
Min	**Max**	**Factory setting**
0.000	1000.000	1.000

Description: Sets the proportional gain (P component) of the technology controller.

Note: p2280 = 0: The proportional gain is disabled.

p2285 Technology controller integral action time / Tec_ctr Tn

SERVO (Tech_ctrl), VECTOR (Tech_ctrl)

Can be changed: U, T		**Access level:** 2
Data type: Floating Point	**Data set:** -	**Function diagram:** 7958
P-Group: Technology	**Units group:** TIME	**Unit selection:** -
Min	**Max**	**Factory setting**
0.000 [s]	60.000 [s]	0.000 [s]

Description: Sets the integral actual time (I component, integrating time constant) of the technology controller.

Note: p2285 = 0: The integral action time is disabled.

p2289[0...n] CI: Technology controller pre-control signal / Tec_ctr prectrl

SERVO (Tech_ctrl), VECTOR (Tech_ctrl)

Can be changed: U, T		**Access level:** 2
Data type: Unsigned32	**Data set:** CDS	**Function diagram:** 7958
P-Group: Technology	**Units group:** -	**Unit selection:** -
Min	**Max**	**Factory setting**
-	-	0

Description: Sets the signal source for the pre-control signal of the technology controller.

p2291 CO: Technology controller maximum limiting / Tec_ctr max_limit

SERVO (Tech_ctrl), VECTOR (Tech_ctrl)

Can be changed: U, T		**Access level:** 2
Data type: Floating Point	**Data set:** -	**Function diagram:** 7958
P-Group: Technology	**Units group:** PERCENT	**Unit selection:** -
Min	**Max**	**Factory setting**
-200.00 [%]	200.00 [%]	100.00 [%]

Description: Sets the maximum limit of the technology controller.

Dependency: Refer to: p2292

Caution! The maximum limit must always be greater than the minimum limit (p2291 > p2292).

p2292 CO: Technology controller minimum limiting / Tec_ctr min_lim

SERVO (Tech_ctrl), VECTOR (Tech_ctrl)

Can be changed: U, T		**Access level:** 2
Data type: Floating Point	**Data set:** -	**Function diagram:** 7958
P-Group: Technology	**Units group:** PERCENT	**Unit selection:** -
Min	**Max**	**Factory setting**
-200.00 [%]	200.00 [%]	0.00 [%]

Description: Sets the minimum limit of the technology controller.

Dependency: Refer to: p2291

Caution! The maximum limit must always be greater than the minimum limit (p2291 > p2292).

© Siemens AG, 2005. All rights reserved

p2293 Technology controller ramp-up/ramp-down time / Tec_ctr ramp up/dn

SERVO (Tech_ctrl), VECTOR (Tech_ctrl)

Can be changed: U, T		**Access level:** 3
Data type: Floating Point	**Data set:** -	**Function diagram:** 7958
P-Group: Technology	**Units group:** TIME	**Unit selection:** -
Min	**Max**	**Factory setting**
0.00 [s]	100.00 [s]	1.00 [s]

Description: Sets the ramp-up and ramp-down time for the maximum and minimum limiting (p2291 and p2292) of the technology controller.

Dependency: Refer to: p2291, p2292

Note: The ramp-up/ramp-down times are referred to 100 %.

r2294 CO: Technology controller output signal / Tec_ctr outp_sig

SERVO (Tech_ctrl), VECTOR (Tech_ctrl)

Can be changed: -		**Access level:** 2
Data type: Floating Point	**Data set:** -	**Function diagram:** 7958
P-Group: Technology	**Units group:** PERCENT	**Unit selection:** -
Min	**Max**	**Factory setting**
- [%]	- [%]	- [%]

Description: Displays the output signal of the technology controller.

Dependency: Refer to: p2295

p2295 CO: Technology controller output scaling / Tec_ctr outp scal

SERVO (Tech_ctrl), VECTOR (Tech_ctrl)

Can be changed: U, T		**Access level:** 3
Data type: Floating Point	**Data set:** -	**Function diagram:** 7958
P-Group: Technology	**Units group:** PERCENT	**Unit selection:** -
Min	**Max**	**Factory setting**
-100.00 [%]	100.00 [%]	100.00 [%]

Description: Sets the scaling for the output signal of the technology controller.

p2296[0...n] CI: Technology controller output scaling / Tec_ctr outp scal

SERVO (Tech_ctrl), VECTOR (Tech_ctrl)

Can be changed: U, T		**Access level:** 2
Data type: Unsigned32	**Data set:** CDS	**Function diagram:** 7958
P-Group: Technology	**Units group:** -	**Unit selection:** -
Min	**Max**	**Factory setting**
-	-	2295[0]

Description: Sets the signal source for the scaling value of the technology controller.

Dependency: Refer to: p2295

p2297[0...n] CI: Technology controller maximum limiting / Tec_ctr max_limit

SERVO (Tech_ctrl), VECTOR (Tech_ctrl)

Can be changed: U, T		**Access level:** 2
Data type: Unsigned32	**Data set:** CDS	**Function diagram:** 7958
P-Group: Technology	**Units group:** -	**Unit selection:** -
Min	**Max**	**Factory setting**
-	-	2291[0]

Description: Sets the signal source for the maximum limiting of the technology controller.

Dependency: Refer to: p2291

© Siemens AG, 2005. All rights reserved

p2298[0...n] CI: Technology controller minimum limiting / Tec_ctr min_lim

SERVO (Tech_ctrl), VECTOR (Tech_ctrl)

Can be changed: U, T		**Access level:** 2
Data type: Unsigned32	**Data set:** CDS	**Function diagram:** 7958
P-Group: Technology	**Units group:** -	**Unit selection:** -
Min	**Max**	**Factory setting**
-	-	2292[0]

Description: Sets the signal source for the minimum limiting of the technology controller.

Dependency: Refer to: p2292

r2349 CO/BO: Technology controller status word / Tec_ctr stat word

SERVO (Tech_ctrl), VECTOR (Tech_ctrl)

Can be changed: -		**Access level:** 3
Data type: Unsigned32	**Data set:** -	**Function diagram:** 7958
P-Group: Technology	**Units group:** -	**Unit selection:** -
Min	**Max**	**Factory setting**
-	-	-

Description: Displays the status word of the technology controller.

Bit field:

Bit	Signal name	0 signal	1 signal	FP
00	Technology controller de-activated	No	Yes	-
01	Technology controller limited	No	Yes	-
02	Technology controller, motorized potentiometer limited max.	No	Yes	-
03	Technology controller, motorized potentiometer limited min.	No	Yes	-

p2900[0...n] CO: Fixed value 1 [%] / Fixed value 1 [%]

SERVO, VECTOR

Can be changed: U, T		**Access level:** 3
Data type: Floating Point	**Data set:** DDS	**Function diagram:** 1021
P-Group: Free function blocks	**Units group:** PERCENT	**Unit selection:** -
Min	**Max**	**Factory setting**
-10000.00 [%]	10000.00 [%]	0.00 [%]

Description: Sets a fixed percentage.

Dependency: Refer to: p2901, p2930

Note: The value can be used to interconnect a scaling function (e.g. scaling of the main setpoint)

p2901[0...n] CO: Fixed value 2 [%] / Fixed value 2 [%]

SERVO, VECTOR

Can be changed: U, T		**Access level:** 3
Data type: Floating Point	**Data set:** DDS	**Function diagram:** 1021
P-Group: Free function blocks	**Units group:** PERCENT	**Unit selection:** -
Min	**Max**	**Factory setting**
-10000.00 [%]	10000.00 [%]	0.00 [%]

Description: Sets a fixed percentage.

Dependency: Refer to: p2900, p2930

Note: The value can be used to interconnect a scaling function (e.g. scaling of the supplementary setpoint)

© Siemens AG, 2005. All rights reserved

p2930[0...n] **CO: Fixed value M [Nm] / Fixed value M [Nm]**

SERVO, VECTOR	**Can be changed:** U, T		**Access level:** 3
	Data type: Floating Point	**Data set:** DDS	**Function diagram:** 1021
	P-Group: Free function blocks	**Units group:** TORQUE	**Unit selection:** -
	Min	**Max**	**Factory setting**
	-100000.00 [Nm]	100000.00 [Nm]	0.00 [Nm]

Description: Sets a fixed value for torque / force.
Dependency: Refer to: p2900, p2901
Note: The value can, for example, be used to interconnect a supplementary torque.

p2930[0...n] **CO: Fixed value F [N] / Fixed value M [Nm]**

SERVO (Lin)	**Can be changed:** U, T		**Access level:** 3
	Data type: Floating Point	**Data set:** DDS	**Function diagram:** 1021
	P-Group: Free function blocks	**Units group:** FORCE	**Unit selection:** -
	Min	**Max**	**Factory setting**
	-100000.00 [N]	100000.00 [N]	0.00 [N]

Description: Sets a fixed value for torque / force.
Dependency: Refer to: p2900, p2901
Note: The value can, for example, be used to interconnect a supplementary torque.

p3110 **External fault 3, power-up delay / Ext fault 3 t_on**

All objects	**Can be changed:** U, T		**Access level:** 3
	Data type: Unsigned16	**Data set:** -	**Function diagram:** 2546
	P-Group: Messages	**Units group:** TIME_M3	**Unit selection:** -
	Min	**Max**	**Factory setting**
	0 [ms]	1000 [ms]	0 [ms]

Description: Sets the delay time for external fault 3.
Dependency: Refer to: p2108, p3111, p3112
Refer to: F07862

p3111 **BI: External fault 3, enable / Ext fault 3 enab**

CU_S, TB30, TM15, TM15DI/DO, TM17, TM31	**Can be changed:** U, T		**Access level:** 3
	Data type: Unsigned32	**Data set:** -	**Function diagram:** 2546
	P-Group: Messages	**Units group:** -	**Unit selection:** -
	Min	**Max**	**Factory setting**
	-	-	1

Description: Sets the signal source for the enable signal of external fault 3.
External fault 3 is initiated by the following AND logic operation:
- BI: p2108 negated
- BI: p3111
- BI: p3112 negated

Dependency: Refer to: p2108, p3110, p3112
Refer to: F07862

© Siemens AG, 2005. All rights reserved

p3111[0...n] BI: External fault 3, enable / Ext fault 3 enab

A_INF, B_INF, SERVO, S_INF, TM41, VECTOR

Can be changed: U, T		**Access level:** 3
Data type: Unsigned32	**Data set:** CDS	**Function diagram:** -
P-Group: Messages	**Units group:** -	**Unit selection:** -
Min	**Max**	**Factory setting**
-	-	1

Description: Sets the signal source for the enable signal of external fault 3.
External fault 3 is initiated by the following AND logic operation:
- BI: p2108 negated
- BI: p3111
- BI: p3112 negated

Dependency: Refer to: p2108, p3110, p3112
Refer to: F07862

p3112 BI: External fault 3 enable negated / Ext flt 3 enab neg

CU_S, TB30, TM15, TM15DI/DO, TM17, TM31

Can be changed: U, T		**Access level:** 3
Data type: Unsigned32	**Data set:** -	**Function diagram:** 2546
P-Group: Messages	**Units group:** -	**Unit selection:** -
Min	**Max**	**Factory setting**
-	-	0

Description: Sets the signal source for the negated enable signal of external fault 3.
External fault 3 is initiated by the following AND logic operation:
- BI: p2108 negated
- BI: p3111
- BI: p3112 negated

Dependency: Refer to: p2108, p3110, p3111
Refer to: F07862

p3112[0...n] BI: External fault 3 enable negated / Ext flt 3 enab neg

A_INF, B_INF, SERVO, S_INF, TM41, VECTOR

Can be changed: U, T		**Access level:** 3
Data type: Unsigned32	**Data set:** CDS	**Function diagram:** -
P-Group: Messages	**Units group:** -	**Unit selection:** -
Min	**Max**	**Factory setting**
-	-	0

Description: Sets the signal source for the negated enable signal of external fault 3.
External fault 3 is initiated by the following AND logic operation:
- BI: p2108 negated
- BI: p3111
- BI: p3112 negated

Dependency: Refer to: p2108, p3110, p3111
Refer to: F07862

© Siemens AG, 2005. All rights reserved

r3113 CO/BO: NAMUR message bit bar / NAMUR bit bar

All objects

Can be changed: -
Access level: 3
Data type: Unsigned16
Data set: -
Function diagram: -
P-Group: Messages
Units group: -
Unit selection: -

Min	Max	Factory setting
-	-	-

Description: Displays the status of NAMUR signal bit bar.
The faults or alarms are assigned to the appropriate signaling/message classes and influence a specific message bit.

Bit field:

Bit	Signal name	0 signal	1 signal	FP
00	Fault, drive converter data electronics / software error	No	Yes	-
01	Line supply fault	No	Yes	-
02	DC link overvoltage	No	Yes	-
03	Drive converter electronics fault	No	Yes	-
04	Drive converter overtemperature	No	Yes	-
05	Ground fault	No	Yes	-
06	Motor overload	No	Yes	-
07	Bus error	No	Yes	-
08	External safety-relevant shutdown	No	Yes	-
09	Mot encoder fault	No	Yes	-
10	Error, internal communications	No	Yes	-
11	Infeed fault	No	Yes	-
15	Other faults	No	Yes	-

p3400 Infeed configuration word / INF config word

A_INF, S_INF

Can be changed: C2(1), T
Access level: 2
Data type: Unsigned16
Data set: -
Function diagram: 8940
P-Group: Closed-loop control
Units group: -
Unit selection: -

Min	Max	Factory setting
0000 bin	1111 1111 1111 1111 bin	1010 bin

Description: Sets the configuration word of the infeed.

Bit field:

Bit	Signal name	0 signal	1 signal	FP
00	ALM 0 / SLM 1	Off	On	-
01	Flat-top mode	Off	On	-
03	Vdc controller on	Off	On	-
05	Line supply voltage sensing with VSM	Off	On	-

Dependency: Refer to: p0210

© Siemens AG, 2005. All rights reserved

Note: Re bit 00:

In the smart mode, the DC link voltage is not controlled - however, infeed can still regenerate. The magnitude of the DC link voltage depends on the actual line supply voltage and the DC link load.

For drive units belonging to the 400 V voltage class, for a drive unit supply voltage (p0210) greater than 415 V, the infeed is always operated in the smart mode. This means that the 660 V limit can be maintained for the steady-state DC link voltage (p0280) up to a line supply voltage of 480 V.

Re bit 01:

If the flat top mode is deactivated, switching losses are higher. This means that the full power is no longer continuously available.

For p3400.0 = 1, this bit is not effective.

Re bit 03:

If the Vdc controller is switched-out, overvoltage or undervoltage conditions occur in the DC link if no other voltage-regulating component is located in the DC link.

For p3400.0 = 1, this bit is not effective.

Re bit 05:

VSM: Voltage Sensing Module

If a VSM is detected when commissioning the system, this bit is automatically set.

When the bit is set, the line supply voltage input of the VSM must be connected (connected at the line side of the commutating reactor).

r3402 Infeed internal status / INF status int

A_INF, S_INF

Can be changed: -		**Access level:** 2
Data type: Integer16	**Data set:** -	**Function diagram:** 8832, 8932
P-Group: Closed-loop control	**Units group:** -	**Unit selection:** -
Min	**Max**	**Factory setting**
-	-	-

Description: Displays the internal status of the infeed module.

Values:

0: Initialization
1: Fault
2: No ON command
3: Offset measurement running
4: ON delay active
5: Precharg. running
6: No pulse enable
7: Synchronization running
8: Ramp-up running
9: oper.
10: Shutdown running
11: Identification running

r3402 Infeed status internal BIC / INF status int

B_INF

Can be changed: -		**Access level:** 2
Data type: Integer16	**Data set:** -	**Function diagram:** 8932
P-Group: Closed-loop control	**Units group:** -	**Unit selection:** -
Min	**Max**	**Factory setting**
-	-	-

Description: Displays the internal status of the infeed module.

0: Initialization
1: Fault
2: No ON command
4: ON delay active
5: Precharg. running
6: oper.

© Siemens AG, 2005. All rights reserved

r3405 CO/BO: Status word infeed / INF ZSW

A_INF, S_INF

Can be changed: -
Access level: 2
Data type: Unsigned16
Data set: -
Function diagram: 8928
P-Group: Closed-loop control
Units group: -
Unit selection: -

Min	Max	Factory setting
-	-	-

Description: Status word of the infeed.

Bit field:

Bit	Signal name	0 signal	1 signal	FP
00	Smart mode active	No	Yes	-
01	Vdc-ctrl active	No	Yes	-
02	Phase failure detected	No	Yes	-
03	Current limit reached	No	Yes	-
04	Infeed operates regenerating/motoring	Motor mode	Regenerative mode	-
05	Motor operation inhibited	No	Yes	-
06	Regenerative operation inhibited	No	Yes	-

Note: Re bit 02:

The bit indicates the alarm A6205 that is present.

The bit is set when a phase failure has been detected. The signal is reset, if

- the infeed has reached the normal operating state again (p3402 = 9) after a phase failure has been bypassed/buffered

- the pulse enable is withdrawn due to a fault or powering-down with OFF1/OFF2.

p3410 Infeed identification method / INF Ident_type

A_INF, S_INF

Can be changed: C2(1), T
Access level: 2
Data type: Integer16
Data set: -
Function diagram: -
P-Group: Closed-loop control
Units group: -
Unit selection: -

Min	Max	Factory setting
0	5	5

Description: Sets the line and DC link parameter identification routine for the infeed module.

Values:

0: Identification (Id) off
1: Activate identification (Id)
2: Set controller settings
3: Save identification and controller settings
4: Save identification and controller settings with L adaptation
5: Reset, save Id and controller setting with L adaptation

Dependency: Refer to: r3411, r3412, p3415, p3416, p3417, p3421, p3422

Refer to: A06400

Notice: For p3410 = 1, 3, 4, 5, alarm A06400 is output and designates that the selected identification will take place the next time that the pulses are enabled.

© Siemens AG, 2005. All rights reserved

Note: When p3410 = 1 an identification run for the total inductance and DC link capacitance is initiated when the pulses are next enabled. The results are displayed in r3411, r3412. The infeed then goes into the power-on state.

For p3410 = 2, the data (r3411 and r3412) determined during the identification run (p3410 = 1) is transferred into p3421 and p3422. Calculations for the controller are then repeated. The user must save the new parameters in a non-volatile fashion in order to permanently select the new controller setting.

When p3410 = 3 an identification run for the total inductance and DC link capacitance is initiated when the pulses are next enabled. The data determined during identification (r3411 and r3412) are transferred into p3421 and p3422 and the controller parameters recalculated. All of the parameters for the infeed module are then automatically stored in a non-volatile memory. The infeed continues to operate without any interruption with the new controller parameters.

When p3410 = 4 an identification run for the total inductance and DC link capacitance is initiated when the pulses are next enabled. The data determined during identification (r3411 and r3412) are transferred into p3421 and p3422 and the controller parameters recalculated. The identification is then repeated at an increased current level (p3415[1]). If the inductance measured the second time is lower, the parameters are written to the current controller adaptation (p3620, p3622).. All of the parameters for the infeed module are then automatically stored in a non-volatile memory. The infeed continues to operate without any interruption with the new controller parameters.

For p3410 = 5, the same measurements and write operations are always carried-out as for p3410 = 4. However, for the first identification run, initially the controller setting is reset by setting p3421 to p0223 and p3422 to p0227. Further, before the measurements are carried-out, a brief identification run is executed to coarsely set the controller.

p3410 is automatically set to 0 after an identification run has been successfully completed.

r3411[0...1] Infeed identified inductance / INF L ident

A_INF, S_INF

Can be changed: -		**Access level:** 2
Data type: Floating Point	**Data set:** -	**Function diagram:** -
P-Group: Closed-loop control	**Units group:** INDUCTANCE_M3	**Unit selection:** -
Min	**Max**	**Factory setting**
- [mH]	- [mH]	- [mH]

Description: Displays the identified total inductance. The value corresponds to the total inductance between the rigid line supply and the infeed input terminals.

Index: [0] = Result run 1
[1] = Result run 2

Dependency: Refer to: p3410

Note: The value measured in the first identification run is displayed in r3411[0] (if p3410 = 1, 3, 4, 5). This value is transferred to p3421.

The value measured in the second identification run (if p3410 = 4, 5) is displayed in r3411[1] - this value is used to set the current controller adaptation (p3622).

r3412[0...1] Infeed DC-link capacitance identified / INF C_DClink ident

A_INF, S_INF

Can be changed: -		**Access level:** 2
Data type: Floating Point	**Data set:** -	**Function diagram:** -
P-Group: Closed-loop control	**Units group:** CAPACITY_M3	**Unit selection:** -
Min	**Max**	**Factory setting**
- [mF]	- [mF]	- [mF]

Description: Displays the identified total DC link capacitance.

Index: [0] = Result run 1
[1] = Result run 2

Dependency: Refer to: p3410

Note: The value measured in the first identification run (if p3410 = 1, 3, 4, 5) is displayed in r3412[0]. For p3410 = 1, 3, this value is transferred to p3422.

The DC link capacitance is not measured at the second identification run.

© Siemens AG, 2005. All rights reserved

p3415[0...1] Infeed excitation current L identification / INF I_energiz L_ID

A_INF, S_INF	**Can be changed:** T		**Access level:** 4
	Data type: Floating Point	**Data set:** -	**Function diagram:** -
	P-Group: Closed-loop control	**Units group:** PERCENT	**Unit selection:** -
	Min	**Max**	**Factory setting**
	0.00 [%]	100.00 [%]	[0] 30.00 [%] [1] 48.00 [%]

Description: Sets the magnitude of the excitation frequency for the L identification.
The setting is made as a percentage of the maximum power module current (r0209).

Index: [0] = Result run 1
[1] = Result run 2

Dependency: Refer to: p3410, r3411, p3421, p3620, p3622

Notice: In order to correctly identify the current level (p3410 = 4, 5) depending on the reactor inductance, the following must apply:
p3415[0] < p3415[1]

Note: The reactive current for identification run 1 is set in p3415[0] (basic controller setting).
The reactive current for identification run 2 is set in p3415[1] (adaptation of the current controller when reducing the reactor inductance with increasing current magnitude).

p3416 Infeed excitation amplitude C identification / INF energ_amp C_Id

A_INF, S_INF	**Can be changed:** T		**Access level:** 4
	Data type: Floating Point	**Data set:** -	**Function diagram:** -
	P-Group: Closed-loop control	**Units group:** PERCENT	**Unit selection:** -
	Min	**Max**	**Factory setting**
	0.10 [%]	20.00 [%]	2.00 [%]

Description: Sets the level of the excitation frequency for identification of the total DC link capacitance. The amplitude is indicated as a percentage of the DC voltage setpoint (Vdc = p0210 * p3510).

Dependency: Refer to: p3410, r3412, p3422

p3417 Infeed excitation frequency C identification / INF f_energiz C_ID

A_INF, S_INF	**Can be changed:** T		**Access level:** 4
	Data type: Floating Point	**Data set:** -	**Function diagram:** -
	P-Group: Closed-loop control	**Units group:** FREQUENCY	**Unit selection:** -
	Min	**Max**	**Factory setting**
	10.00 [Hz]	200.00 [Hz]	50.00 [Hz]

Description: Sets the level of the excitation frequency for identification of the total DC link capacitance.

Dependency: Refer to: p3410, r3412, p3422

p3421 Infeed inductance / INF Inductance

A_INF, S_INF	**Can be changed:** T		**Access level:** 3
	Data type: Floating Point	**Data set:** -	**Function diagram:** -
	P-Group: Closed-loop control	**Units group:** INDUCTANCE_M3	**Unit selection:** -
	Min	**Max**	**Factory setting**
	0.00 [mH]	1000.00 [mH]	2.00 [mH]

Description: Sets the total line supply inductance. This value is preset to the sum of the values in p0223 and p0225.

Dependency: Refer to: p0223, p0225, p3410, p3622

Note: The controller setting is derived from this value.
The value can be automatically determined using the identification run (p3410).
For a parallel circuit, the value corresponds to the inductance of a power module.

© Siemens AG, 2005. All rights reserved

p3422 Infeed DC link capacitance / INF C_DCL

A_INF, S_INF

Can be changed: T | **Access level:** 3
Data type: Floating Point | **Data set:** - | **Function diagram:** -
P-Group: Closed-loop control | **Units group:** CAPACITY_M3 | **Unit selection:** -

Min	Max	Factory setting
0.00 [mF]	1000.00 [mF]	2.00 [mF]

Description: Sets the DC link capacitance. This value is preset to p0227.
Dependency: Refer to: p0227, p3410
Note: The controller setting is derived from this value.
The value can be automatically determined using the identification run (p3410).

p3440 Smart mode configuration / SLM configuration

A_INF, S_INF

Can be changed: T | **Access level:** 4
Data type: Unsigned16 | **Data set:** - | **Function diagram:** -
P-Group: Closed-loop control | **Units group:** - | **Unit selection:** -

Min	Max	Factory setting
0000 bin	1111 1111 1111 1111 bin	0001 bin

Description: Sets the configuration of the smart mode.

Bit field:

Bit	Signal name	0 signal	1 signal	FP
00	Soft pulse mode	Off	On	-

Note: Re bit 00:
When the pulsed mode for the smart mode is de-activated, when regenerating, higher phase current gradients occur.

r3452 Infeed PLL status / INF PLL status

A_INF, S_INF

Can be changed: - | **Access level:** 4
Data type: Integer16 | **Data set:** - | **Function diagram:** -
P-Group: Closed-loop control | **Units group:** - | **Unit selection:** -

Min	Max	Factory setting
-	-	-

Description: Displays the status of the line supply PLL.
Values:
0: Initialization running
1: Error when synchronizing
2: Anal. line supply
3: Calculation line data
4: No pulse enable
5: PLL calculation
6: Final status controlled / smart mode
7: Reserved

p3458 Infeed PLL smoothing time / INF PLL t_smooth

A_INF, S_INF

Can be changed: U, T | **Access level:** 4
Data type: Floating Point | **Data set:** - | **Function diagram:** -
P-Group: Closed-loop control | **Units group:** TIME_M3 | **Unit selection:** -

Min	Max	Factory setting
2.0 [ms]	1000.0 [ms]	50.0 [ms]

Description: Sets the smoothing time for the line supply PLL.
Note: It may be necessary to reduce the smoothing time for weak line supplies with high frequency fluctuations. There is otherwise a risk of brief orientation errors and the infeed could fail.

© Siemens AG, 2005. All rights reserved

r3460 **Infeed PLL system deviation / INF PLL ctrl_dev**

A_INF, S_INF	**Can be changed:** -		**Access level:** 4
	Data type: Floating Point	**Data set:** -	**Function diagram:** -
	P-Group: Closed-loop control	**Units group:** ANGLE	**Unit selection:** -
	Min	**Max**	**Factory setting**
	- [°]	- [°]	- [°]

Description: Displays the PLL system deviation.

r3461 **Infeed PLL system deviation after filtering / INF PLL ctrl_devSm**

A_INF, S_INF	**Can be changed:** -		**Access level:** 4
	Data type: Floating Point	**Data set:** -	**Function diagram:** -
	P-Group: Closed-loop control	**Units group:** ANGLE	**Unit selection:** -
	Min	**Max**	**Factory setting**
	- [°]	- [°]	- [°]

Description: Displays the PLL system deviation after filtering.
Dependency: Refer to: p3458

p3463 **Infeed, line angle change, phase failure detection / INF Phi phase fail**

A_INF, S_INF	**Can be changed:** T		**Access level:** 4
	Data type: Floating Point	**Data set:** -	**Function diagram:** -
	P-Group: Closed-loop control	**Units group:** ANGLE	**Unit selection:** -
	Min	**Max**	**Factory setting**
	-180.0 [°]	180.0 [°]	15.0 [°]

Description: If the line supply angle (angle between the line supply phases) suddenly changes by this value, then a phase failure is assumed. The pulses are then inhibited for 10 ms.
Dependency: Refer to: A06205

p3469[0...n] **Latch delay time correction, zero crossover detection / t_latch corr PLL**

A_INF, S_INF	**Can be changed:** T		**Access level:** 4
	Data type: Floating Point	**Data set:** PDS	**Function diagram:** -
	P-Group: Closed-loop control	**Units group:** TIME_M6	**Unit selection:** -
	Min	**Max**	**Factory setting**
	-10000.0 [µs]	10000.0 [µs]	0.0 [µs]

Description: Calibration value for the RC filter of the zero crossover detection of the line supply voltage in the power module.
For p3469 = 0, a new calibration is carried-out at the next identification run with p3410 = 4 or p3410 = 5.
Note: The calibration value is saved in the EEPROM of the power module (not on the CompactFlash card), as it involves a characteristic/feature of the power module.

r3470 **Infeed active current filter / INF I_act filter**

A_INF	**Can be changed:** -		**Access level:** 3
	Data type: Floating Point	**Data set:** -	**Function diagram:** -
	P-Group: Closed-loop control	**Units group:** CURRENT_AC_EFF	**Unit selection:** -
	Min	**Max**	**Factory setting**
	- [Aeff]	- [Aeff]	- [Aeff]

Description: Displays the active current requirement due to the line filter.
Dependency: Refer to: r0038, p0221, p0222

© Siemens AG, 2005. All rights reserved

Note: With respect to the line supply, the sum of the active currents of the power module (p0078) and line filter (p3470) are effective.
The active current demand of the line filter is taken into account when calculating the power factor (r0038).
The magnitude of the line filter active current depends on the capacitance (p0221) and the resistance (p0222) of the line filter.

r3471 Infeed reactive current filter / INF I_reactiveFilt

A_INF

Can be changed: -		**Access level:** 3
Data type: Floating Point	**Data set:** -	**Function diagram:** -
P-Group: Closed-loop control	**Units group:** CURRENT_AC_EFF	**Unit selection:** -
Min	**Max**	**Factory setting**
- [Aeff]	- [Aeff]	- [Aeff]

Description: Displays the reactive current requirement as a result of the line filter.
Dependency: Refer to: r0038, p0221, p0222
Note: With respect to the line supply, the sum of the reactive currents of the power module (p0076) and line filter (p3471) are effective.
The reactive current requirement of the line filter is taken into account when calculating the power factor (r0038).
The magnitude of the line filter reactive current depends on the capacitance (p0221) and the resistance (p0222) of the line filter.

p3480 Infeed modulation depth limit / INF mod_depth lim

A_INF

Can be changed: U, T		**Access level:** 3
Data type: Floating Point	**Data set:** -	**Function diagram:** 8940
P-Group: Closed-loop control	**Units group:** PERCENT	**Unit selection:** -
Min	**Max**	**Factory setting**
50.0 [%]	110.0 [%]	97.0 [%]

Description: Sets the maximum steady-state modulation depth. When this limit is reached, the DC link voltage is boosted to maintain the control margin. This means that the control reserve is maintained.
Dependency: Refer to: p3481, r3485

p3481 Infeed standby controller dynamic response / INF res_ctrl dyn

A_INF

Can be changed: U, T		**Access level:** 4
Data type: Floating Point	**Data set:** -	**Function diagram:** 8940
P-Group: Closed-loop control	**Units group:** TIME_M3	**Unit selection:** -
Min	**Max**	**Factory setting**
0.0 [ms]	1000.0 [ms]	7.5 [ms]

Description: Sets the dynamic response of the reserve controller for the modulation depth. As the smoothing time increases, the response of the DC link voltage tracking becomes slower.
Dependency: Refer to: p3480, r3485

r3485 Infeed standby controller output / INF res_ctrl outpt

A_INF

Can be changed: -		**Access level:** 3
Data type: Floating Point	**Data set:** -	**Function diagram:** 8940
P-Group: Closed-loop control	**Units group:** VOLTAGE_DC	**Unit selection:** -
Min	**Max**	**Factory setting**
- [V]	- [V]	- [V]

Description: Displays the reserve controller output for the modulation depth.
The DC link voltage is increased by this voltage value - the summed setpoint for the DC link voltage is output in r0088.
The summed setpoint is limited to the maximum steady-stage DC link voltage (p0280).
Dependency: Refer to: p3480, p3481

© Siemens AG, 2005. All rights reserved

p3490 Infeed OFF command delay time / INF t_del OFF

A_INF, B_INF, S_INF

Can be changed: T		**Access level:** 2
Data type: Floating Point	**Data set:** -	**Function diagram:** 8932
P-Group: Closed-loop control	**Units group:** TIME_M3	**Unit selection:** -
Min	**Max**	**Factory setting**
0.0 [ms]	1000000.0 [ms]	0.0 [ms]

Description: Sets the delay time for the ON/OFF1 command of the infeed. After ON/OFF1 = 0 the infeed remains in operation for the specified time

Dependency: Refer to: p0840

Notice: The ON/OFF1 command of the infeed can be interrupted.

Note: This parameter is only relevant if a Motor Module and the infeed are controlled by the same OFF command. In this case, the delay time and the stop ramp time of the motor can be coordinated with one another.

p3491 Infeed I-offset measurement monitoring time / INF I_offs t_monit

A_INF, S_INF

Can be changed: T		**Access level:** 4
Data type: Floating Point	**Data set:** -	**Function diagram:** 8932
P-Group: Commands	**Units group:** TIME_M3	**Unit selection:** -
Min	**Max**	**Factory setting**
0 [ms]	65000 [ms]	2000 [ms]

Description: Sets the monitoring time for the current-offset measurement of the power module.

The time is started with the normal end of the measurement. If the measurement is invalid and if no valid measurement can be taken within the monitoring period (phase currents too high), an appropriate message is generated.

Note: Set this parameter to 0 to allow variations in the delay when running-up.

p3492 Infeed, line supply undervoltage delay time / INF V_line t_del

A_INF, S_INF

Can be changed: T		**Access level:** 3
Data type: Floating Point	**Data set:** -	**Function diagram:** -
P-Group: Commands	**Units group:** TIME	**Unit selection:** -
Min	**Max**	**Factory setting**
0 [s]	300 [s]	0 [s]

Description: Sets the delay time for shutdown due to a line supply undervoltage condition (A06100).

After the fault occurs, the power module is only tripped (shut down) after this delay has expired. If the fault is removed during this design time, then the power module is not tripped (shut down).

Dependency: Refer to: p0283

Refer to: F06100

Note: The degree of ruggedness of the infeed with respect to fluctuations in the line supply voltage can be increased by parameterizing this delay value.

However, the following should be noted:

- the infeed power decreases proportionally (linearly) with the line supply voltage.

- when other components are connected, for low line supply voltage, operating faults or damage can occur. In this case, the specifications of the connected electrical components should always be carefully observed.

p3510 Infeed DC link voltage setpoint / INF Vdc setp

A_INF

Can be changed: U, T		**Access level:** 2
Data type: Floating Point	**Data set:** -	**Function diagram:** 1774, 8940
P-Group: Closed-loop control	**Units group:** VOLTAGE_DC	**Unit selection:** -
Min	**Max**	**Factory setting**
300.00 [V]	1600.00 [V]	600.00 [V]

Description: Sets the setpoint for the DC link voltage.

Dependency: Refer to: p3511

© Siemens AG, 2005. All rights reserved

Warning! Before increasing the voltage limit for pulsed operation of a controlled booksize infeed with line supply voltages p0210 > 415 V it should be checked whether the motors, connected to the DC link, are specified for the higher motor voltages.
The warning information associated with p0210 must be carefully observed.

Note: The permissible range of the DC link voltage depends on the parameterized unit supply voltage (p0210).
For booksize drive units, the following applies: 1.42 * p0210 < p3510 < 1.6 * p0210.
For chassis drive units, the following applies: 1.42 * p0210 < p3510 < 2.0 * p0210.

p3511 CI: Infeed DC link voltage supplementary setpoint / INF Vdc Z_set

A_INF	**Can be changed:** T		**Access level:** 3
	Data type: Unsigned32	**Data set:** -	**Function diagram:** 8940
	P-Group: Closed-loop control	**Units group:** -	**Unit selection:** -
	Min	**Max**	**Factory setting**
	-	-	0

Description: Sets the signal source for the supplementary setpoint for the DC link voltage.
Dependency: Refer to: p3510

p3513 BI: Inhibit voltage-controlled operation / Inhib U_ctrl mode

A_INF	**Can be changed:** T		**Access level:** 3
	Data type: Unsigned32	**Data set:** -	**Function diagram:** -
	P-Group: -	**Units group:** -	**Unit selection:** -
	Min	**Max**	**Factory setting**
	-	-	0

Description: Sets the signal source for inhibiting the voltage-controlled mode of the infeed.
Dependency: Refer to: p3400, r3405
Notice: The DC link voltage must be controlled by a different component at the DC link; otherwise this results in an overvoltage or undervoltage condition.
Note: The current controller remains active and can be controlled by means of its setpoint inputs (p3515, p3610).

p3514 Infeed supplementary active current steady-state / INF I_sup_eff stat

A_INF	**Can be changed:** U, T		**Access level:** 3
	Data type: Floating Point	**Data set:** -	**Function diagram:** 8940
	P-Group: Closed-loop control	**Units group:** CURRENT_AC_EFF	**Unit selection:** -
	Min	**Max**	**Factory setting**
	-1000.00 [Aeff]	1000.00 [Aeff]	0.00 [Aeff]

Description: Sets a steady-state supplementary setpoint for the active line supply current.
Dependency: Refer to: p3515

p3515 CI: Infeed supplementary active current / INF I_suppl eff

A_INF	**Can be changed:** T		**Access level:** 3
	Data type: Unsigned32	**Data set:** -	**Function diagram:** 8940
	P-Group: Closed-loop control	**Units group:** -	**Unit selection:** -
	Min	**Max**	**Factory setting**
	-	-	0

Description: Sets the signal source for the supplementary setpoint of the active current.
Dependency: Refer to: p3514
Note: For a master-slave infeed, the master can enter the current setpoint via this connector input.

© Siemens AG, 2005. All rights reserved

p3516 Infeed current distribution factor (parallel connection) / INF I_distr_factor

A_INF	**Can be changed:** T		**Access level:** 4
	Data type: Floating Point	**Data set:** -	**Function diagram:** 8940
	P-Group: Closed-loop control	**Units group:** PERCENT	**Unit selection:** -
	Min	**Max**	**Factory setting**
	0.00 [%]	100.00 [%]	100.00 [%]

Description: Sets the factor to be multiplied by the active current setpoint for the current controller.
For a master slave infeed configuration, the value reduced in this way can be distributed to the slave axes. The overall gain from the perspective of the voltage controller remains the same.

r3517 Infeed active current controller unlimited setpoint / INF I_act ctrl set

A_INF	**Can be changed:** -		**Access level:** 4
	Data type: Floating Point	**Data set:** -	**Function diagram:** 8940
	P-Group: Closed-loop control	**Units group:** CURRENT_AC_EFF	**Unit selection:** -
	Min	**Max**	**Factory setting**
	- [Aeff]	- [Aeff]	- [Aeff]

Description: Displays the unlimited setpoint of the active current controller.
For a master-slave infeed configuration, the master retrieves this setpoint and distributes it to all of the slaves. The slaves operate in the current-controlled mode.

p3520[0...3] CI: Infeed power pre-control / INF pre-control P

A_INF	**Can be changed:** U, T		**Access level:** 2
	Data type: Unsigned32	**Data set:** -	**Function diagram:** -
	P-Group: Closed-loop control	**Units group:** -	**Unit selection:** -
	Min	**Max**	**Factory setting**
	-	-	0

Description: Sets the signal source for power pre-control.
Dependency: Refer to: p3521
Note: Closed-loop control of the DC link voltage is improved by pre-controlling the power required for the other modules.
A non-normalized quantity is expected so that the various power reference values (r2004) of the drive objects do not have to be taken into account.
The scaling factors p3521 are used to adapt the scaling.

p3521[0...3] Infeed pre-control power scaling / INF pre-ctr P scal

A_INF	**Can be changed:** U, T		**Access level:** 2
	Data type: Floating Point	**Data set:** -	**Function diagram:** -
	P-Group: Closed-loop control	**Units group:** PERCENT	**Unit selection:** -
	Min	**Max**	**Factory setting**
	-100000.00000 [%]	100000.00000 [%]	100.00000 [%]

Description: Sets the scaling factor for the power pre-control.
Dependency: Refer to: p3520

p3530 Infeed current limit, motoring / INF I_limit mot

A_INF	**Can be changed:** U, T		**Access level:** 3
	Data type: Floating Point	**Data set:** -	**Function diagram:** 8940
	P-Group: Closed-loop control	**Units group:** CURRENT_AC_EFF	**Unit selection:** -
	Min	**Max**	**Factory setting**
	1.00 [Aeff]	100000.00 [Aeff]	10000.00 [Aeff]

Description: Sets the motoring limit for the active line current.
The currently effective current limit is displayed in r0067[0].

© Siemens AG, 2005. All rights reserved

Dependency: Refer to: r0067, p3532

Cautiont: If this limit is selected lower than the maximum current permissible for the power module (r0067), the infeed can no longer provide its full controlled power.

Operating faults of the infeed can occur due to the resulting DC link undervoltage.

Notice: For self-commutated infeeds, the DC link voltage decreases if more power is drawn from the DC link by the connected load than can be supplied by the line because of the power module maximum current or a limit in p3530.

If the DC link voltage decreases down to the rectified value, then the complete current - necessary to cover the required active power - flows, uncontrolled into the rectifier circuit via the diodes.

This is the reason that, for physical reasons, the value in p3530 cannot act as current limit that is always maintained.

The value forms a current threshold from which point onwards the DC link energy is used as buffer for brief power fluctuations.

p3531 Infeed current limit, regenerating / INF I_limit regen

A_INF

Can be changed: U, T		**Access level:** 3
Data type: Floating Point	**Data set:** -	**Function diagram:** 8940
P-Group: Closed-loop control	**Units group:** CURRENT_AC_EFF	**Unit selection:** -
Min	**Max**	**Factory setting**
-100000.00 [Aeff]	-1.00 [Aeff]	-10000.00 [Aeff]

Description: Sets the limit for the active line supply current when regenerating.

The currently effective current limit is displayed in r0067[1].

Dependency: Refer to: r0067, p3533

Cautiont: If this limit is selected lower than the maximum current permissible for the power module (r0067), the infeed can no longer provide its full controlled power.

This can result in an overvoltage condition in the DC link.

Notice: For self-commutated infeeds, the DC link voltage increases if more power is input to the DC link through the connected source than can be fed to the line because of the maximum power module current or a limit in p3531

If the DC link voltage exceeds the permissible threshold (p0297), defined by the hardware, then the unit is tripped due to overvoltage.

The value in p3531 represents a current limit that is always maintained - however, this can result in overvoltage conditions in the DC link.

The value in p3531 represents a current limit from which point onwards the capacitance of the DC link can be used as buffer for brief power fluctuations.

p3532 BI: Infeed, inhibit motoring / INF mot op inhibit

A_INF

Can be changed: T		**Access level:** 3
Data type: Unsigned32	**Data set:** -	**Function diagram:** 8920
P-Group: -	**Units group:** -	**Unit selection:** -
Min	**Max**	**Factory setting**
-	-	0

Description: Sets the signal source for inhibiting the motoring mode of the infeed.

Dependency: Refer to: r3405, p3530

Notice: If the motor mode is inhibited although power is withdrawn from the DC link, then the DC link voltage drops to the rectified value.

In this state, the DC link is post-charged through the diodes and motoring power is fed to the power module in spite of the motoring inhibit.

Note: The inhibit only becomes active after operation has been enabled and the Vdc has been ramped-up (r0863.0 = 1).

© Siemens AG, 2005. All rights reserved

p3533 BI: Infeed, inhibit regenerative operation / INF regen op inhib

A_INF, S_INF	**Can be changed:** T		**Access level:** 3
	Data type: Unsigned32	**Data set:** -	**Function diagram:** 8920
	P-Group: -	**Units group:** -	**Unit selection:** -
	Min	**Max**	**Factory setting**
	-	-	0

Description: Sets the signal source to inhibit the regenerating mode of the infeed.
Dependency: Refer to: r3405, p3531
Notice: The DC link voltage will increase if regenerative operation is inhibited even though power is being regenerated into the DC link.
Note: The inhibit only becomes active after operation has been enabled and the Vdc has been ramped-up (r0863.0 = 1).

r3554 Infeed Vdc controller integral component / INF Vdc_ctr I_comp

A_INF	**Can be changed:** -		**Access level:** 2
	Data type: Floating Point	**Data set:** -	**Function diagram:** 8940
	P-Group: Closed-loop control	**Units group:** CURRENT_AC_EFF	**Unit selection:** -
	Min	**Max**	**Factory setting**
	- [Aeff]	- [Aeff]	- [Aeff]

Description: Displays the integral action component of the DC link voltage controller (Vdc controller).

p3560 Infeed Vdc controller proportional gain / INF Vdc_ctrl Kp

A_INF	**Can be changed:** U, T		**Access level:** 2
	Data type: Floating Point	**Data set:** -	**Function diagram:** 8940
	P-Group: Closed-loop control	**Units group:** PERCENT	**Unit selection:** -
	Min	**Max**	**Factory setting**
	0.01 [%]	1000.00 [%]	100.00 [%]

Description: Sets the normalized proportional gain for the DC link voltage controller (Vdc controller).
Note: A value of 100 % corresponds to the basic setting derived from loop control parameters (p3421, p3422).

p3562 Infeed,Vdc controller integral action time / INF Vdc_ctrl Tn

A_INF	**Can be changed:** U, T		**Access level:** 2
	Data type: Floating Point	**Data set:** -	**Function diagram:** 8940
	P-Group: Closed-loop control	**Units group:** PERCENT	**Unit selection:** -
	Min	**Max**	**Factory setting**
	0.10 [%]	100000.00 [%]	100.00 [%]

Description: Sets the normalized integral action time for the DC-link voltage controller (Vdc).
Note: A value of 100 % corresponds to the basic setting derived from loop control parameters (p3421, p3422).

p3564 Infeed Vdc monitor, time constant / INF Vdc_observe T

A_INF	**Can be changed:** T		**Access level:** 4
	Data type: Floating Point	**Data set:** -	**Function diagram:** -
	P-Group: Closed-loop control	**Units group:** TIME_M3	**Unit selection:** -
	Min	**Max**	**Factory setting**
	0.0 [ms]	100.0 [ms]	0.2 [ms]

Description: Sets the filter time constant for the DC link voltage monitor (Vdc).

© Siemens AG, 2005. All rights reserved

p3566 Infeed Vdc ramp duration / INF Vdc t_ramp

A_INF

Can be changed: T		**Access level:** 2
Data type: Floating Point	**Data set:** -	**Function diagram:** 8932
P-Group: Commands	**Units group:** TIME_M3	**Unit selection:** -
Min	**Max**	**Factory setting**
40 [ms]	1000 [ms]	100 [ms]

Description: Sets the ramp time for the DC link voltage (Vdc) when powering-up and powering-down.

Powering-up (pulses enabled, r0898.3 = 1):

During this time, the DC link voltage is increased from the rectifier value after pre-charging to the voltage setpoint (p3510, p3511). The voltage setpoint is increased, when necessary, so that the modulation depth reserve (p3481) is maintained. The reactive current is set to the value 0 while ramping.

Powering-down (inhibit pulses, r0898.3 = 0):

During this time, the DC link voltage is reduced to the rectified value (sqrt(2) * line supply voltage). The reactive current value is set to the value 0 when the ramp starts.

r3602 Infeed control status / INF ctrl state

A_INF

Can be changed: -		**Access level:** 4
Data type: Integer16	**Data set:** -	**Function diagram:** -
P-Group: Closed-loop control	**Units group:** -	**Unit selection:** -
Min	**Max**	**Factory setting**
-	-	-

Description: Displays the status of the closed-loop infeed control.

Values:

0: Initialization running
1: No pulse enable
2: Ramp-up, DC-link voltage
3: Ramp-up reactive current
4: Shutdown running
5: Reset identification
6: oper.
7: Identification running
8: Smart mode running

p3603 Infeed current pre-control factor D-action / INF I_ctrl Dfactor

A_INF

Can be changed: U, T		**Access level:** 4
Data type: Floating Point	**Data set:** -	**Function diagram:** 8946
P-Group: Closed-loop control	**Units group:** PERCENT	**Unit selection:** -
Min	**Max**	**Factory setting**
0.00 [%]	500.00 [%]	100.00 [%]

Description: The D component of the current pre-control is determined from the device data of the filter. p3603 can be used to weigh the pre-calculated D component. If no dynamic precontrol is to be used, set the factor to zero.

r3606 Infeed active current controller system deviation / INF I_act ctrl dev

A_INF

Can be changed: -		**Access level:** 2
Data type: Floating Point	**Data set:** -	**Function diagram:** 8946
P-Group: Closed-loop control	**Units group:** CURRENT_AC_EFF	**Unit selection:** -
Min	**Max**	**Factory setting**
- [Aeff]	- [Aeff]	- [Aeff]

Description: Displays the system deviation of the active current controller.

© Siemens AG, 2005. All rights reserved

r3608 Infeed reactive current controller system deviation / INF I_reactvCtrDev

A_INF	**Can be changed:** -		**Access level:** 2
	Data type: Floating Point	**Data set:** -	**Function diagram:** 8946
	P-Group: Closed-loop control	**Units group:** CURRENT_AC_EFF	**Unit selection:** -
	Min	**Max**	**Factory setting**
	- [Aeff]	- [Aeff]	- [Aeff]

Description: Displays the system deviation of the reactive current controller.

p3610 Infeed reactive current fixed setpoint / INF I_reactv F_set

A_INF	**Can be changed:** U, T		**Access level:** 2
	Data type: Floating Point	**Data set:** -	**Function diagram:** 1774, 8946
	P-Group: Closed-loop control	**Units group:** CURRENT_AC_EFF	**Unit selection:** -
	Min	**Max**	**Factory setting**
	-10000.0 [Aeff]	10000.0 [Aeff]	0.0 [Aeff]

Description: Sets the fixed setpoint for the reactive current.

p3611 CI: Infeed reactive current supplementary setpoint / INF I_reactv Z_set

A_INF	**Can be changed:** U, T		**Access level:** 2
	Data type: Unsigned32	**Data set:** -	**Function diagram:** 8946
	P-Group: Closed-loop control	**Units group:** -	**Unit selection:** -
	Min	**Max**	**Factory setting**
	-	-	0

Description: Sets the signal source for the supplementary setpoint of the reactive current.

p3615 Infeed current controller P gain / INF I_ctrl Kp

A_INF	**Can be changed:** U, T		**Access level:** 2
	Data type: Floating Point	**Data set:** -	**Function diagram:** 8946
	P-Group: Closed-loop control	**Units group:** PERCENT	**Unit selection:** -
	Min	**Max**	**Factory setting**
	0.00 [%]	1000.00 [%]	100.00 [%]

Description: Sets the normalized P gain for closed-loop current control of the infeed.
Note: A value of 100 % corresponds to the basic setting derived from loop control parameters (p3421, p3422).

p3617 Infeed current controller integral action time / INF I_ctrl Tn

A_INF	**Can be changed:** U, T		**Access level:** 2
	Data type: Floating Point	**Data set:** -	**Function diagram:** 8946
	P-Group: Closed-loop control	**Units group:** PERCENT	**Unit selection:** -
	Min	**Max**	**Factory setting**
	0.10 [%]	100000.00 [%]	100.00 [%]

Description: Sets the normalized integral action time for the infeed current controller.
Note: A value of 100 % corresponds to the basic setting derived from loop control parameters (p3421, p3422).

© Siemens AG, 2005. All rights reserved

r3618 Infeed active current controller, integral component / INF I_act_ctrl Tn

A_INF	**Can be changed:** -		**Access level:** 2
	Data type: Floating Point	**Data set:** -	**Function diagram:** 8946
	P-Group: Closed-loop control	**Units group:** VOLTAGE_AC_EFF	**Unit selection:** -
	Min	**Max**	**Factory setting**
	- [Veff]	- [Veff]	- [Veff]

Description: Displays the integral component of the active current controller.

r3619 Infeed reactive current controller integral component / INF I_reactv_ctrTn

A_INF	**Can be changed:** -		**Access level:** 2
	Data type: Floating Point	**Data set:** -	**Function diagram:** 8946
	P-Group: Closed-loop control	**Units group:** VOLTAGE_AC_EFF	**Unit selection:** -
	Min	**Max**	**Factory setting**
	- [Veff]	- [Veff]	- [Veff]

Description: Displays the integral action component of the reactive current controller.

p3620 Infeed current controller adaptation lower application threshold / INF I_adptLowThrsh

A_INF	**Can be changed:** U, T		**Access level:** 3
	Data type: Floating Point	**Data set:** -	**Function diagram:** -
	P-Group: Motor	**Units group:** PERCENT	**Unit selection:** -
	Min	**Max**	**Factory setting**
	0.00 [%]	100.00 [%]	0.00 [%]

Description: Sets the switch-in threshold for the current controller adaptation.

The value refers to the maximum power modular current (r0209). From the starting threshold onwards, the inductance value (p3421) used for current control is reduced linearly as a function of the current value. The inductance value for the maximum power module current is therefore p3421 * p3622.

Dependency: Refer to: p3410, p3415, p3622

Note: For the identification with p3410 = 4, 5, the parameter is automatically set to 80% of the current magnitude for run 1 (p3415[0]).

p3622 Infeed current controller adaptation reduction factor / INF I_adapt factor

A_INF	**Can be changed:** U, T		**Access level:** 3
	Data type: Floating Point	**Data set:** -	**Function diagram:** -
	P-Group: Motor	**Units group:** PERCENT	**Unit selection:** -
	Min	**Max**	**Factory setting**
	0.01 [%]	100.00 [%]	100.00 [%]

Description: Sets the inductance of the commutating reactor at the maximum power module current (r0209) as a percentage of the inductance (p3421) at the application threshold (p3620).

Dependency: Refer to: p3410, p3415, p3620

Note: This parameter can be set automatically using the identification function (p3410 = 4, 5).

© Siemens AG, 2005. All rights reserved

p3624[0...1] Infeed harmonics controller order / INF harm_ctr order

A_INF	**Can be changed:** T		**Access level:** 2
	Data type: Unsigned16	**Data set:** -	**Function diagram:** -
	P-Group: Closed-loop control	**Units group:** -	**Unit selection:** -
	Min	**Max**	**Factory setting**
	5	13	[0] 5 [1] 7

Description: Sets the Order of the line harmonics for the current harmonics controller.
p3624[0]: Order of the line harmonics for the first harmonics controller.
p3624[1]: Order of the line harmonics for the second harmonics controller.

Dependency: Refer to: p3625, r3626

Note: Harmonics in the line supply voltage can cause harmonics in the converter current. These types of current harmonics can be reduced by activating additional controller modules.
Example:
For a 50 Hz line supply harmonics at 250 Hz in the phase currents can be reduced by activating a harmonic controller with Order 5 (p3624[0] = 5).

p3625[0...1] Infeed harmonics controller scaling / INF harm_ctrl scal

A_INF	**Can be changed:** U, T		**Access level:** 2
	Data type: Floating Point	**Data set:** -	**Function diagram:** -
	P-Group: Closed-loop control	**Units group:** PERCENT	**Unit selection:** -
	Min	**Max**	**Factory setting**
	0.0 [%]	300.0 [%]	100.0 [%]

Description: Sets the gain of the harmonics controller.
p3625[0]: Gain of the first harmonics controller
p3625[1]: Gain of the second harmonics controller
0 %: Controller is de-activated
100 %: Controller is activated with default gain setting

Dependency: Refer to: p3624, r3626

Note: The harmonics controller corrects the power module voltages so that the line-side current harmonics are reduced.
The order of a current harmonic, that is to be dampened using a harmonics controller, is defined using p3624.

r3626[0...1] Infeed harmonics control output / INF harm_ctrl outp

A_INF	**Can be changed:** -		**Access level:** 2
	Data type: Floating Point	**Data set:** -	**Function diagram:** -
	P-Group: Closed-loop control	**Units group:** VOLTAGE_AC_EFF	**Unit selection:** -
	Min	**Max**	**Factory setting**
	- [Veff]	- [Veff]	- [Veff]

Description: Displays the output voltages of the harmonics controller.
r3626[0]: RMS value of the 5th harmonic of the controller output voltage
r3626[1]: RMS value of the 7th harmonic of the controller output voltage
The harmonics controller corrects the power module voltages so that the line-side current harmonics are reduced.

Dependency: Refer to: p3624, p3625

© Siemens AG, 2005. All rights reserved

r3632 Infeed input voltage Vsd (active component) / INF U_input Usd

A_INF	**Can be changed:** -		**Access level:** 3
	Data type: Floating Point	**Data set:** -	**Function diagram:** 1774, 8946, 8950
	P-Group: Closed-loop control	**Units group:** VOLTAGE_AC_EFF	**Unit selection:** -
	Min	**Max**	**Factory setting**
	- [Veff]	- [Veff]	- [Veff]

Description: Displays the voltage Vsd (active component) at the 3-phase line supply input of the power module.

r3633 Infeed input voltage Vsq (reactive component) / INF U_input Usq

A_INF	**Can be changed:** -		**Access level:** 3
	Data type: Floating Point	**Data set:** -	**Function diagram:** 1774, 8946, 8950
	P-Group: Closed-loop control	**Units group:** VOLTAGE_AC_EFF	**Unit selection:** -
	Min	**Max**	**Factory setting**
	- [Veff]	- [Veff]	- [Veff]

Description: Displays the voltage Vsq (reactive component) at the 3-phase line supply input of the power module.

r3635 Infeed output voltage angle / INF U_output angle

A_INF	**Can be changed:** -		**Access level:** 2
	Data type: Floating Point	**Data set:** -	**Function diagram:** 8950
	P-Group: Closed-loop control	**Units group:** ANGLE	**Unit selection:** -
	Min	**Max**	**Factory setting**
	- [°]	- [°]	- [°]

Description: Displays the output voltage angle (relative to the line angle).

p3660 VSM input line supply voltage, voltage scaler / VSM input U_scaler

A_INF, S_INF	**Can be changed:** T		**Access level:** 3
	Data type: Floating Point	**Data set:** -	**Function diagram:** -
	P-Group: Closed-loop control	**Units group:** PERCENT	**Unit selection:** -
	Min	**Max**	**Factory setting**
	0.00 [%]	100000.00 [%]	0.00 [%]

Description: Sets the voltage scaler for the Voltage Sensing Module (VSM).

Note: When the 690 V input is used (X522) without voltage scaler,, 0 % should be entered.

When the 100 V input (X521) is used with voltage scaler to measure medium voltages, the dividing (scaling) factor multiplied by 100% should be entered.

Example:

1000 V line supply voltage, voltage scaling, 10:1

--> voltage at the VSM input is 100 V

--> p3660 = 10 * 100 % = 1000 %

r3661 CO: VSM input line supply voltage u1 - u2 / VSM input u1-u2

A_INF, S_INF	**Can be changed:** -		**Access level:** 3
	Data type: Floating Point	**Data set:** -	**Function diagram:** 8850, 8950, 9880
	P-Group: Closed-loop control	**Units group:** VOLTAGE_AC_PP	**Unit selection:** -
	Min	**Max**	**Factory setting**
	- [V]	- [V]	- [V]

Description: Displays the voltage between L1 and L2.

Dependency: Refer to: p3660

© Siemens AG, 2005. All rights reserved

Note: X521.1 or X522.1: Connection of L1
X521.2 or X522.2: Connection of L2

r3662 CO: VSM input line supply voltage u2 - u3 / VSM input u2-u3

A_INF, S_INF	**Can be changed:** -		**Access level:** 3
	Data type: Floating Point	**Data set:** -	**Function diagram:** 8850, 8950, 9880
	P-Group: Closed-loop control	**Units group:** VOLTAGE_AC_PP	**Unit selection:** -
	Min	**Max**	**Factory setting**
	- [V]	- [V]	- [V]

Description: Displays the voltage between L2 and L3.
Dependency: Refer to: p3660
Note: X521.2 or X522.2: Connection of L2
X521.3 or X522.3: Connection of L3

r3664 BO: VSM temperature evaluation, status / VSM temp status

A_INF, S_INF	**Can be changed:** -		**Access level:** 3
	Data type: Unsigned16	**Data set:** -	**Function diagram:** -
	P-Group: Terminals	**Units group:** -	**Unit selection:** -
	Min	**Max**	**Factory setting**
	-	-	-

Description: Displays the status of the temperature evaluation of the Voltage Sensing Module (VSM).
This displays as to whether the temperature actual value has exceeded the fault/alarm threshold.

Bit field:

Bit	Signal name	0 signal	1 signal	FP
00	Temperature alarm threshold exceeded	No	Yes	-
01	Temperature fault threshold exceeded	No	Yes	-

Dependency: Refer to: p3665, r3666, p3667, p3668

p3665[0...n] VSM temperature evaluation, sensor type / VSM TempSensorType

A_INF, S_INF	**Can be changed:** T		**Access level:** 3
	Data type: Integer16	**Data set:** -	**Function diagram:** -
	P-Group: Closed-loop control	**Units group:** -	**Unit selection:** -
	Min	**Max**	**Factory setting**
	0	2	0

Description: Setting of the temperature sensor for the Voltage Sensing Module (VSM).
The temperature sensor is connected to terminals X520.5 and X520.6 of the VSM.
Values:
0: No sensor
1: PTC
2: KTY84

r3666 CO: VSM temperature KTY / VSM temp KTY

A_INF, S_INF	**Can be changed:** -		**Access level:** 3
	Data type: Floating Point	**Data set:** -	**Function diagram:** -
	P-Group: Closed-loop control	**Units group:** TEMPERATURE	**Unit selection:** -
	Min	**Max**	**Factory setting**
	- [°C]	- [°C]	- [°C]

Description: Displays the temperature actual value of a KTY84 temperature sensor connected to the Voltage Sensing Module (VSM).
Prerequisite:
A KTY84 sensor is connected and p3665 is set to 2.
Dependency: Refer to: p3665

© Siemens AG, 2005. All rights reserved

p3667 VSM line filter overtemperature alarm threshold / VSMfilt_T A_thresh

A_INF, S_INF

Can be changed: T | **Access level:** 4
Data type: Unsigned16 | **Data set:** - | **Function diagram:** -
P-Group: - | **Units group:** TEMPERATURE | **Unit selection:** -

Min	Max	Factory setting
0 [°C]	301 [°C]	150 [°C]

Description: Sets the alarm threshold for the KTY temperature sensor of the Voltage Sensing Module (VSM) to monitor the line filter temperature.
Prerequisite:
A KTY84 sensor is connected and p3665 is set to 2.

Dependency: Refer to: p3665
Refer to: F34207

p3668 VSM line filter overtemperature shutdown threshold / VSM filt_T F_thres

A_INF, S_INF

Can be changed: T | **Access level:** 4
Data type: Unsigned16 | **Data set:** - | **Function diagram:** -
P-Group: - | **Units group:** TEMPERATURE | **Unit selection:** -

Min	Max	Factory setting
0 [°C]	301 [°C]	180 [°C]

Description: Sets the shutdown threshold for the KTY temperature sensor of the VSM to monitor the line filter temperature.

Dependency: Refer to: p3667
Refer to: A34211

p3669 VSM line filter overtemperature hysteresis / VSM filt_T hyst

A_INF, S_INF

Can be changed: T | **Access level:** 4
Data type: Unsigned16 | **Data set:** - | **Function diagram:** -
P-Group: - | **Units group:** TEMPERATURE_K | **Unit selection:** -

Min	Max	Factory setting
1 [K]	50 [K]	3 [K]

Description: Sets the hysteresis for the alarm threshold of the VSM to monitor the line filter temperature.

Dependency: Refer to: p3667

p3670 VSM 10 V input CT gain / VSM CT_gain

A_INF, S_INF

Can be changed: T | **Access level:** 3
Data type: Floating Point | **Data set:** - | **Function diagram:** -
P-Group: Closed-loop control | **Units group:** CURRENT_AC_PP | **Unit selection:** -

Min	Max	Factory setting
0.000 [A]	1000.000 [A]	1.000 [A]

Description: Sets CT gain of the CT connected at the 10 V input of the Voltage Sensing Module (VSM).
The parameter specifies the current magnitude in [A] referred to the input voltage at the VSM in [V].
Example:
CT with 1 V per 200 A.
--> p3670 = 200

Dependency: Refer to: r3671, r3672

Note: The CT for phase 1 is connected at terminals X520.1 and X520.2 of the VSM.
The CT for phase 2 is connected at terminals X520.3 and X520.4 of the VSM.

© Siemens AG, 2005. All rights reserved

r3671 CO: VSM 10 V input CT 1 actual value / VSM CT 1 I_act

A_INF, S_INF	**Can be changed:** -		**Access level:** 3
	Data type: Floating Point	**Data set:** -	**Function diagram:** -
	P-Group: Closed-loop control	**Units group:** CURRENT_AC_PP	**Unit selection:** -
	Min	**Max**	**Factory setting**
	- [A]	- [A]	- [A]

Description: Displays the current actual value from current transducer (CT) 1 at the 10 V input of the Voltage Sensing Module (VSM).
Dependency: Refer to: p3670
Note: The CT for phase 1 is connected at terminals X520.1 and X520.2 of the VSM.

r3672 CO: VSM 10 V input CT 2 actual value / VSM CT 2 I_act

A_INF, S_INF	**Can be changed:** -		**Access level:** 3
	Data type: Floating Point	**Data set:** -	**Function diagram:** -
	P-Group: Closed-loop control	**Units group:** CURRENT_AC_PP	**Unit selection:** -
	Min	**Max**	**Factory setting**
	- [A]	- [A]	- [A]

Description: Displays the current actual value from current transducer (CT) 2 at the 10 V input of the Voltage Sensing Module (VSM).
Dependency: Refer to: p3670
Note: The CT for phase 2 is connected at terminals X520.3 and X520.4 of the VSM.

r3673 CO: VSM 10 V input 1 actual value / VSM input 1 U_act

A_INF, S_INF	**Can be changed:** -		**Access level:** 3
	Data type: Floating Point	**Data set:** -	**Function diagram:** -
	P-Group: Closed-loop control	**Units group:** VOLTAGE_AC_PP	**Unit selection:** -
	Min	**Max**	**Factory setting**
	- [V]	- [V]	- [V]

Description: Displays the actual value of the voltage measured at the 10 V input 1 of the Voltage Sensing Modules (VSM).
Dependency: Refer to: p3670
Note: 10 V input 1: Terminals X520.1 and X520.2

r3674 CO: VSM 10 V input 2 actual value / VSM input 2 U_act

A_INF, S_INF	**Can be changed:** -		**Access level:** 3
	Data type: Floating Point	**Data set:** -	**Function diagram:** -
	P-Group: Closed-loop control	**Units group:** VOLTAGE_AC_PP	**Unit selection:** -
	Min	**Max**	**Factory setting**
	- [V]	- [V]	- [V]

Description: Displays the actual value of the voltage measured at the 10 V input 2 of the Voltage Sensing Modules (VSM).
Dependency: Refer to: p3670
Note: 10 V input 2: Terminals X520.3 and X520.4

© Siemens AG, 2005. All rights reserved

p3676 VSM line filter capacitance alarm threshold / VSMfilt C A_thresh

A_INF, S_INF

Can be changed: T		**Access level:** 4
Data type: Floating Point	**Data set:** -	**Function diagram:** -
P-Group: -	**Units group:** PERCENT	**Unit selection:** -
Min	**Max**	**Factory setting**
0.00 [%]	100.00 [%]	0.00 [%]

Description: Sets the alarm threshold for the change of the capacitance of the line filter.
The filter capacitance monitoring function is de-activated with p3676 = 0.00 %.

Dependency: Refer to: p3670
Refer to: A06250

Note: Prerequisite for monitoring the filter capacitance:
The phase currents must be measured at two capacitors of the line filter. To do this, CTs should be connected at the 10 V inputs of the VSM.

r3677[0...2] VSM line filter capacitance / VSM filt C

A_INF, S_INF

Can be changed: -		**Access level:** 4
Data type: Floating Point	**Data set:** -	**Function diagram:** -
P-Group: Closed-loop control	**Units group:** CAPACITY_M6	**Unit selection:** -
Min	**Max**	**Factory setting**
- [µF]	- [µF]	- [µF]

Description: Displays the capacitance of the line filter (for a star circuit configuration).

Index: [0] = Phase U
[1] = Phase V
[2] = Phase W

Dependency: Refer to: p3676

Note: Prerequisites:
The filter capacitance monitoring is activated.

p3820[0...n] Friction characteristic, value n0 / Friction n0

SERVO, VECTOR (n/M)

Can be changed: T		**Access level:** 2
Data type: Floating Point	**Data set:** DDS	**Function diagram:** 7010
P-Group: Functions	**Units group:** SPEED_ROT	**Unit selection:** -
Min	**Max**	**Factory setting**
0.00 [1/min]	210000.00 [1/min]	15.00 [1/min]

Description: The friction characteristic is defined by 10 value pairs.
This parameter specifies the n coordinate of the 1st value pair of the friction characteristic.

Dependency: Refer to: p3830, p3845

p3820[0...n] Friction characteristic, value n0 / Friction n0

SERVO (Lin)

Can be changed: T		**Access level:** 2
Data type: Floating Point	**Data set:** DDS	**Function diagram:** 7010
P-Group: Functions	**Units group:** SPEED_LIN_METRIC_P3	**Unit selection:** -
Min	**Max**	**Factory setting**
0.00 [m/min]	21000.00 [m/min]	1.50 [m/min]

Description: The friction characteristic is defined by 10 value pairs.
This parameter specifies the n coordinate of the 1st value pair of the friction characteristic.

Dependency: Refer to: p3830, p3845

© Siemens AG, 2005. All rights reserved

p3821[0...n] Friction characteristic, value n1 / Friction n1

SERVO, VECTOR (n/M)

Can be changed: T		**Access level:** 2
Data type: Floating Point	**Data set:** DDS	**Function diagram:** 7010
P-Group: Functions	**Units group:** SPEED_ROT	**Unit selection:** -
Min	**Max**	**Factory setting**
0.00 [1/min]	210000.00 [1/min]	30.00 [1/min]

Description: The friction characteristic is defined by 10 value pairs.
This parameter specifies the n coordinate of the 2nd value pair of the friction characteristic.

Dependency: Refer to: p3831, p3845

p3821[0...n] Friction characteristic, value n1 / Friction n1

SERVO (Lin)

Can be changed: T		**Access level:** 2
Data type: Floating Point	**Data set:** DDS	**Function diagram:** 7010
P-Group: Functions	**Units group:** SPEED_LIN_METRIC_P3	**Unit selection:** -
Min	**Max**	**Factory setting**
0.00 [m/min]	21000.00 [m/min]	3.00 [m/min]

Description: The friction characteristic is defined by 10 value pairs.
This parameter specifies the n coordinate of the 2nd value pair of the friction characteristic.

Dependency: Refer to: p3831, p3845

p3822[0...n] Friction characteristic, value n2 / Friction n2

SERVO, VECTOR (n/M)

Can be changed: T		**Access level:** 2
Data type: Floating Point	**Data set:** DDS	**Function diagram:** 7010
P-Group: Functions	**Units group:** SPEED_ROT	**Unit selection:** -
Min	**Max**	**Factory setting**
0.00 [1/min]	210000.00 [1/min]	60.00 [1/min]

Description: The friction characteristic is defined by 10 value pairs.
This parameter specifies the n coordinate of the 3rd value pair of the friction characteristic.

Dependency: Refer to: p3832, p3845

p3822[0...n] Friction characteristic, value n2 / Friction n2

SERVO (Lin)

Can be changed: T		**Access level:** 2
Data type: Floating Point	**Data set:** DDS	**Function diagram:** 7010
P-Group: Functions	**Units group:** SPEED_LIN_METRIC_P3	**Unit selection:** -
Min	**Max**	**Factory setting**
0.00 [m/min]	21000.00 [m/min]	6.00 [m/min]

Description: The friction characteristic is defined by 10 value pairs.
This parameter specifies the n coordinate of the 3rd value pair of the friction characteristic.

Dependency: Refer to: p3832, p3845

© Siemens AG, 2005. All rights reserved

p3823[0...n] Friction characteristic, value n3 / Friction n3

SERVO, VECTOR (n/M)

Can be changed: T		**Access level:** 2
Data type: Floating Point	**Data set:** DDS	**Function diagram:** 7010
P-Group: Functions	**Units group:** SPEED_ROT	**Unit selection:** -
Min	**Max**	**Factory setting**
0.00 [1/min]	210000.00 [1/min]	120.00 [1/min]

Description: The friction characteristic is defined by 10 value pairs.
This parameter specifies the n coordinate of the 4th value pair of the friction characteristic.

Dependency: Refer to: p3833, p3845

p3823[0...n] Friction characteristic, value n3 / Friction n3

SERVO (Lin)

Can be changed: T		**Access level:** 2
Data type: Floating Point	**Data set:** DDS	**Function diagram:** 7010
P-Group: Functions	**Units group:** SPEED_LIN_METRIC_P3	**Unit selection:** -
Min	**Max**	**Factory setting**
0.00 [m/min]	21000.00 [m/min]	12.00 [m/min]

Description: The friction characteristic is defined by 10 value pairs.
This parameter specifies the n coordinate of the 4th value pair of the friction characteristic.

Dependency: Refer to: p3833, p3845

p3824[0...n] Friction characteristic, value n4 / Friction n4

SERVO, VECTOR (n/M)

Can be changed: T		**Access level:** 2
Data type: Floating Point	**Data set:** DDS	**Function diagram:** 7010
P-Group: Functions	**Units group:** SPEED_ROT	**Unit selection:** -
Min	**Max**	**Factory setting**
0.00 [1/min]	210000.00 [1/min]	150.00 [1/min]

Description: The friction characteristic is defined by 10 value pairs.
This parameter specifies the n coordinate of the 5th value pair of the friction characteristic.

Dependency: Refer to: p3834, p3845

p3824[0...n] Friction characteristic, value n4 / Friction n4

SERVO (Lin)

Can be changed: T		**Access level:** 2
Data type: Floating Point	**Data set:** DDS	**Function diagram:** 7010
P-Group: Functions	**Units group:** SPEED_LIN_METRIC_P3	**Unit selection:** -
Min	**Max**	**Factory setting**
0.00 [m/min]	21000.00 [m/min]	15.00 [m/min]

Description: The friction characteristic is defined by 10 value pairs.
This parameter specifies the n coordinate of the 5th value pair of the friction characteristic.

Dependency: Refer to: p3834, p3845

© Siemens AG, 2005. All rights reserved

p3825[0...n] Friction characteristic, value n5 / Friction n5

SERVO, VECTOR (n/M)

Can be changed: T		**Access level:** 2
Data type: Floating Point	**Data set:** DDS	**Function diagram:** 7010
P-Group: Functions	**Units group:** SPEED_ROT	**Unit selection:** -
Min	**Max**	**Factory setting**
0.00 [1/min]	210000.00 [1/min]	300.00 [1/min]

Description: The friction characteristic is defined by 10 value pairs.
This parameter specifies the n coordinate of the 6th value pair of the friction characteristic.

Dependency: Refer to: p3835, p3845

p3825[0...n] Friction characteristic, value n5 / Friction n5

SERVO (Lin)

Can be changed: T		**Access level:** 2
Data type: Floating Point	**Data set:** DDS	**Function diagram:** 7010
P-Group: Functions	**Units group:** SPEED_LIN_METRIC_P3	**Unit selection:** -
Min	**Max**	**Factory setting**
0.00 [m/min]	21000.00 [m/min]	30.00 [m/min]

Description: The friction characteristic is defined by 10 value pairs.
This parameter specifies the n coordinate of the 6th value pair of the friction characteristic.

Dependency: Refer to: p3835, p3845

p3826[0...n] Friction characteristic, value n6 / Friction n6

SERVO, VECTOR (n/M)

Can be changed: T		**Access level:** 2
Data type: Floating Point	**Data set:** DDS	**Function diagram:** 7010
P-Group: Functions	**Units group:** SPEED_ROT	**Unit selection:** -
Min	**Max**	**Factory setting**
0.00 [1/min]	210000.00 [1/min]	600.00 [1/min]

Description: The friction characteristic is defined by 10 value pairs.
This parameter specifies the n coordinate of the 7th value pair of the friction characteristic.

Dependency: Refer to: p3836, p3845

p3826[0...n] Friction characteristic, value n6 / Friction n6

SERVO (Lin)

Can be changed: T		**Access level:** 2
Data type: Floating Point	**Data set:** DDS	**Function diagram:** 7010
P-Group: Functions	**Units group:** SPEED_LIN_METRIC_P3	**Unit selection:** -
Min	**Max**	**Factory setting**
0.00 [m/min]	21000.00 [m/min]	60.00 [m/min]

Description: The friction characteristic is defined by 10 value pairs.
This parameter specifies the n coordinate of the 7th value pair of the friction characteristic.

Dependency: Refer to: p3836, p3845

© Siemens AG, 2005. All rights reserved

p3827[0...n] Friction characteristic, value n7 / Friction n7

SERVO, VECTOR (n/M)

Can be changed: T		**Access level:** 2
Data type: Floating Point	**Data set:** DDS	**Function diagram:** 7010
P-Group: Functions	**Units group:** SPEED_ROT	**Unit selection:** -
Min	**Max**	**Factory setting**
0.00 [1/min]	210000.00 [1/min]	1200.00 [1/min]

Description: The friction characteristic is defined by 10 value pairs.
This parameter specifies the n coordinate of the 8th value pair of the friction characteristic.

Dependency: Refer to: p3837, p3845

p3827[0...n] Friction characteristic, value n7 / Friction n7

SERVO (Lin)

Can be changed: T		**Access level:** 2
Data type: Floating Point	**Data set:** DDS	**Function diagram:** 7010
P-Group: Functions	**Units group:** SPEED_LIN_METRIC_P3	**Unit selection:** -
Min	**Max**	**Factory setting**
0.00 [m/min]	21000.00 [m/min]	120.00 [m/min]

Description: The friction characteristic is defined by 10 value pairs.
This parameter specifies the n coordinate of the 8th value pair of the friction characteristic.

Dependency: Refer to: p3837, p3845

p3828[0...n] Friction characteristic, value n8 / Friction n8

SERVO, VECTOR (n/M)

Can be changed: T		**Access level:** 2
Data type: Floating Point	**Data set:** DDS	**Function diagram:** 7010
P-Group: Functions	**Units group:** SPEED_ROT	**Unit selection:** -
Min	**Max**	**Factory setting**
0.00 [1/min]	210000.00 [1/min]	1500.00 [1/min]

Description: The friction characteristic is defined by 10 value pairs.
This parameter specifies the n coordinate of the 9th value pair of the friction characteristic.

Dependency: Refer to: p3838, p3845

p3828[0...n] Friction characteristic, value n8 / Friction n8

SERVO (Lin)

Can be changed: T		**Access level:** 2
Data type: Floating Point	**Data set:** DDS	**Function diagram:** 7010
P-Group: Functions	**Units group:** SPEED_LIN_METRIC_P3	**Unit selection:** -
Min	**Max**	**Factory setting**
0.00 [m/min]	21000.00 [m/min]	150.00 [m/min]

Description: The friction characteristic is defined by 10 value pairs.
This parameter specifies the n coordinate of the 9th value pair of the friction characteristic.

Dependency: Refer to: p3838, p3845

© Siemens AG, 2005. All rights reserved

p3829[0...n] Friction characteristic, value n9 / Friction n9

SERVO, VECTOR (n/M)

Can be changed: T		**Access level:** 2
Data type: Floating Point	**Data set:** DDS	**Function diagram:** 7010
P-Group: Functions	**Units group:** SPEED_ROT	**Unit selection:** -
Min	**Max**	**Factory setting**
0.00 [1/min]	210000.00 [1/min]	3000.00 [1/min]

Description: The friction characteristic is defined by 10 value pairs.
This parameter specifies the n coordinate of the 10th value pair of the friction characteristic.

Dependency: Refer to: p3839, p3845

p3829[0...n] Friction characteristic, value n9 / Friction n9

SERVO (Lin)

Can be changed: T		**Access level:** 2
Data type: Floating Point	**Data set:** DDS	**Function diagram:** 7010
P-Group: Functions	**Units group:** SPEED_LIN_METRIC_P3	**Unit selection:** -
Min	**Max**	**Factory setting**
0.00 [m/min]	21000.00 [m/min]	300.00 [m/min]

Description: The friction characteristic is defined by 10 value pairs.
This parameter specifies the n coordinate of the 10th value pair of the friction characteristic.

Dependency: Refer to: p3839, p3845

p3830[0...n] Friction characteristic, value M0 / Friction M0

SERVO, VECTOR (n/M)

Can be changed: T		**Access level:** 2
Data type: Floating Point	**Data set:** DDS	**Function diagram:** 7010
P-Group: Functions	**Units group:** TORQUE	**Unit selection:** -
Min	**Max**	**Factory setting**
-1000000.00 [Nm]	1000000.00 [Nm]	0.00 [Nm]

Description: The friction characteristic is defined by 10 value pairs.
This parameter specifies the M coordinate of the 1st value pair of the friction characteristic.

Dependency: Refer to: p3820, p3845

p3830[0...n] Friction characteristic, value M0 / Friction M0

SERVO (Lin)

Can be changed: T		**Access level:** 2
Data type: Floating Point	**Data set:** DDS	**Function diagram:** 7010
P-Group: Functions	**Units group:** FORCE	**Unit selection:** -
Min	**Max**	**Factory setting**
-1000000.00 [N]	1000000.00 [N]	0.00 [N]

Description: The friction characteristic is defined by 10 value pairs.
This parameter specifies the M coordinate of the 1st value pair of the friction characteristic.

Dependency: Refer to: p3820, p3845

© Siemens AG, 2005. All rights reserved

p3831[0...n] Friction characteristic, value M1 / Friction M9

SERVO, VECTOR (n/M)

Can be changed: T		**Access level:** 2
Data type: Floating Point	**Data set:** DDS	**Function diagram:** 7010
P-Group: Functions	**Units group:** TORQUE	**Unit selection:** -
Min	**Max**	**Factory setting**
-1000000.00 [Nm]	1000000.00 [Nm]	0.00 [Nm]

Description: The friction characteristic is defined by 10 value pairs.
This parameter specifies the M coordinate of the 2nd value pair of the friction characteristic.

Dependency: Refer to: p3821, p3845

p3831[0...n] Friction characteristic, value M1 / Friction M9

SERVO (Lin)

Can be changed: T		**Access level:** 2
Data type: Floating Point	**Data set:** DDS	**Function diagram:** 7010
P-Group: Functions	**Units group:** FORCE	**Unit selection:** -
Min	**Max**	**Factory setting**
-1000000.00 [N]	1000000.00 [N]	0.00 [N]

Description: The friction characteristic is defined by 10 value pairs.
This parameter specifies the M coordinate of the 2nd value pair of the friction characteristic.

Dependency: Refer to: p3821, p3845

p3832[0...n] Friction characteristic, value M2 / Friction M2

SERVO, VECTOR (n/M)

Can be changed: T		**Access level:** 2
Data type: Floating Point	**Data set:** DDS	**Function diagram:** 7010
P-Group: Functions	**Units group:** TORQUE	**Unit selection:** -
Min	**Max**	**Factory setting**
-1000000.00 [Nm]	1000000.00 [Nm]	0.00 [Nm]

Description: The friction characteristic is defined by 10 value pairs.
This parameter specifies the M coordinate of the 3rd value pair of the friction characteristic.

Dependency: Refer to: p3822, p3845

p3832[0...n] Friction characteristic, value M2 / Friction M2

SERVO (Lin)

Can be changed: T		**Access level:** 2
Data type: Floating Point	**Data set:** DDS	**Function diagram:** 7010
P-Group: Functions	**Units group:** FORCE	**Unit selection:** -
Min	**Max**	**Factory setting**
-1000000.00 [N]	1000000.00 [N]	0.00 [N]

Description: The friction characteristic is defined by 10 value pairs.
This parameter specifies the M coordinate of the 3rd value pair of the friction characteristic.

Dependency: Refer to: p3822, p3845

p3833[0...n] Friction characteristic, value M3 / Friction M3

SERVO, VECTOR (n/M)

Can be changed: T		**Access level:** 2
Data type: Floating Point	**Data set:** DDS	**Function diagram:** 7010
P-Group: Functions	**Units group:** TORQUE	**Unit selection:** -
Min	**Max**	**Factory setting**
-1000000.00 [Nm]	1000000.00 [Nm]	0.00 [Nm]

Description: The friction characteristic is defined by 10 value pairs.
This parameter specifies the M coordinate of the 4th value pair of the friction characteristic.

Dependency: Refer to: p3823, p3845

© Siemens AG, 2005. All rights reserved

p3833[0...n] Friction characteristic, value M3 / Friction M3

SERVO (Lin)

Can be changed: T		**Access level:** 2
Data type: Floating Point	**Data set:** DDS	**Function diagram:** 7010
P-Group: Functions	**Units group:** FORCE	**Unit selection:** -
Min	**Max**	**Factory setting**
-1000000.00 [N]	1000000.00 [N]	0.00 [N]

Description: The friction characteristic is defined by 10 value pairs.
This parameter specifies the M coordinate of the 4th value pair of the friction characteristic.

Dependency: Refer to: p3823, p3845

p3834[0...n] Friction characteristic, value M4 / Friction M4

SERVO, VECTOR (n/M)

Can be changed: T		**Access level:** 2
Data type: Floating Point	**Data set:** DDS	**Function diagram:** 7010
P-Group: Functions	**Units group:** TORQUE	**Unit selection:** -
Min	**Max**	**Factory setting**
-1000000.00 [Nm]	1000000.00 [Nm]	0.00 [Nm]

Description: The friction characteristic is defined by 10 value pairs.
This parameter specifies the M coordinate of the 5th value pair of the friction characteristic.

Dependency: Refer to: p3824, p3845

p3834[0...n] Friction characteristic, value M4 / Friction M4

SERVO (Lin)

Can be changed: T		**Access level:** 2
Data type: Floating Point	**Data set:** DDS	**Function diagram:** 7010
P-Group: Functions	**Units group:** FORCE	**Unit selection:** -
Min	**Max**	**Factory setting**
-1000000.00 [N]	1000000.00 [N]	0.00 [N]

Description: The friction characteristic is defined by 10 value pairs.
This parameter specifies the M coordinate of the 5th value pair of the friction characteristic.

Dependency: Refer to: p3824, p3845

p3835[0...n] Friction characteristic, value M5 / Friction M5

SERVO, VECTOR (n/M)

Can be changed: T		**Access level:** 2
Data type: Floating Point	**Data set:** DDS	**Function diagram:** 7010
P-Group: Functions	**Units group:** TORQUE	**Unit selection:** -
Min	**Max**	**Factory setting**
-1000000.00 [Nm]	1000000.00 [Nm]	0.00 [Nm]

Description: The friction characteristic is defined by 10 value pairs.
This parameter specifies the M coordinate of the 6th value pair of the friction characteristic.

Dependency: Refer to: p3825, p3845

p3835[0...n] Friction characteristic, value M5 / Friction M5

SERVO (Lin)

Can be changed: T		**Access level:** 2
Data type: Floating Point	**Data set:** DDS	**Function diagram:** 7010
P-Group: Functions	**Units group:** FORCE	**Unit selection:** -
Min	**Max**	**Factory setting**
-1000000.00 [N]	1000000.00 [N]	0.00 [N]

Description: The friction characteristic is defined by 10 value pairs.
This parameter specifies the M coordinate of the 6th value pair of the friction characteristic.

Dependency: Refer to: p3825, p3845

© Siemens AG, 2005. All rights reserved

p3836[0...n] Friction characteristic, value M6 / Friction M6

SERVO, VECTOR (n/M)

Can be changed: T | **Access level:** 2
Data type: Floating Point | **Data set:** DDS | **Function diagram:** 7010
P-Group: Functions | **Units group:** TORQUE | **Unit selection:** -

Min	Max	Factory setting
-1000000.00 [Nm]	1000000.00 [Nm]	0.00 [Nm]

Description: The friction characteristic is defined by 10 value pairs.
This parameter specifies the M coordinate of the 7th value pair of the friction characteristic.

Dependency: Refer to: p3826, p3845

p3836[0...n] Friction characteristic, value M6 / Friction M6

SERVO (Lin)

Can be changed: T | **Access level:** 2
Data type: Floating Point | **Data set:** DDS | **Function diagram:** 7010
P-Group: Functions | **Units group:** FORCE | **Unit selection:** -

Min	Max	Factory setting
-1000000.00 [N]	1000000.00 [N]	0.00 [N]

Description: The friction characteristic is defined by 10 value pairs.
This parameter specifies the M coordinate of the 7th value pair of the friction characteristic.

Dependency: Refer to: p3826, p3845

p3837[0...n] Friction characteristic, value M7 / Friction M7

SERVO, VECTOR (n/M)

Can be changed: T | **Access level:** 2
Data type: Floating Point | **Data set:** DDS | **Function diagram:** 7010
P-Group: Functions | **Units group:** TORQUE | **Unit selection:** -

Min	Max	Factory setting
-1000000.00 [Nm]	1000000.00 [Nm]	0.00 [Nm]

Description: The friction characteristic is defined by 10 value pairs.
This parameter specifies the M coordinate of the 8th value pair of the friction characteristic.

Dependency: Refer to: p3827, p3845

p3837[0...n] Friction characteristic, value M7 / Friction M7

SERVO (Lin)

Can be changed: T | **Access level:** 2
Data type: Floating Point | **Data set:** DDS | **Function diagram:** 7010
P-Group: Functions | **Units group:** FORCE | **Unit selection:** -

Min	Max	Factory setting
-1000000.00 [N]	1000000.00 [N]	0.00 [N]

Description: The friction characteristic is defined by 10 value pairs.
This parameter specifies the M coordinate of the 8th value pair of the friction characteristic.

Dependency: Refer to: p3827, p3845

p3838[0...n] Friction characteristic, value M8 / Friction M8

SERVO, VECTOR (n/M)

Can be changed: T | **Access level:** 2
Data type: Floating Point | **Data set:** DDS | **Function diagram:** 7010
P-Group: Functions | **Units group:** TORQUE | **Unit selection:** -

Min	Max	Factory setting
-1000000.00 [Nm]	1000000.00 [Nm]	0.00 [Nm]

Description: The friction characteristic is defined by 10 value pairs.
This parameter specifies the M coordinate of the 9th value pair of the friction characteristic.

Dependency: Refer to: p3828, p3845

© Siemens AG, 2005. All rights reserved

p3838[0...n] Friction characteristic, value M8 / Friction M8

SERVO (Lin)

Can be changed: T		**Access level:** 2
Data type: Floating Point	**Data set:** DDS	**Function diagram:** 7010
P-Group: Functions	**Units group:** FORCE	**Unit selection:** -
Min	**Max**	**Factory setting**
-1000000.00 [N]	1000000.00 [N]	0.00 [N]

Description: The friction characteristic is defined by 10 value pairs.
This parameter specifies the M coordinate of the 9th value pair of the friction characteristic.

Dependency: Refer to: p3828, p3845

p3839[0...n] Friction characteristic, value M9 / Friction M9

SERVO, VECTOR (n/M)

Can be changed: T		**Access level:** 2
Data type: Floating Point	**Data set:** DDS	**Function diagram:** 7010
P-Group: Functions	**Units group:** TORQUE	**Unit selection:** -
Min	**Max**	**Factory setting**
-1000000.00 [Nm]	1000000.00 [Nm]	0.00 [Nm]

Description: The friction characteristic is defined by 10 value pairs.
This parameter specifies the M coordinate of the 10th value pair of the friction characteristic.

Dependency: Refer to: p3829, p3845

p3839[0...n] Friction characteristic, value M9 / Friction M9

SERVO (Lin)

Can be changed: T		**Access level:** 2
Data type: Floating Point	**Data set:** DDS	**Function diagram:** 7010
P-Group: Functions	**Units group:** FORCE	**Unit selection:** -
Min	**Max**	**Factory setting**
-1000000.00 [N]	1000000.00 [N]	0.00 [N]

Description: The friction characteristic is defined by 10 value pairs.
This parameter specifies the M coordinate of the 10th value pair of the friction characteristic.

Dependency: Refer to: p3829, p3845

r3840 CO/BO: Friction characteristic, status word / Friction state

SERVO, VECTOR (n/M)

Can be changed: -		**Access level:** 2
Data type: Unsigned32	**Data set:** -	**Function diagram:** 7010
P-Group: Functions	**Units group:** -	**Unit selection:** -
Min	**Max**	**Factory setting**
-	-	-

Description: Displays the state of the friction characteristic.

Bit field:

Bit	Signal name	0 signal	1 signal	FP
00	Friction characteristic OK	No	Yes	-
01	Friction characteristic plot activated	No	Yes	-
02	Friction characteristic plot completed	No	Yes	-
03	Friction characteristic plot aborted	No	Yes	-
08	Fiction characteristic direction of rotation, positive	No	Yes	-

© Siemens AG, 2005. All rights reserved

r3841 CO: Friction characteristic output / Friction output

SERVO, VECTOR (n/M)

Can be changed: -		**Access level:** 2
Data type: Floating Point	**Data set:** -	**Function diagram:** 7010
P-Group: Functions	**Units group:** TORQUE	**Unit selection:** -
Min	**Max**	**Factory setting**
- [Nm]	- [Nm]	- [Nm]

Description: Displays the torque / the force of the friction characteristic dependent on the speed / velocity.

Dependency: Refer to: p1569, p3842

r3841 CO: Friction characteristic output / Friction output

SERVO (Lin)

Can be changed: -		**Access level:** 2
Data type: Floating Point	**Data set:** -	**Function diagram:** 7010
P-Group: Functions	**Units group:** FORCE	**Unit selection:** -
Min	**Max**	**Factory setting**
- [N]	- [N]	- [N]

Description: Displays the torque / the force of the friction characteristic dependent on the speed / velocity.

Dependency: Refer to: p1569, p3842

p3842 Friction characteristic activation / Activate friction

SERVO, VECTOR (n/M)

Can be changed: T		**Access level:** 2
Data type: Integer16	**Data set:** -	**Function diagram:** 7010
P-Group: Functions	**Units group:** -	**Unit selection:** -
Min	**Max**	**Factory setting**
0	1	0

Description: Setting to activate and de-activate the friction characteristic.

Values:
0: Friction characteristic de-activated
1: Friction characteristic activated

Dependency: Refer to: p1569, r3841, p3845

p3845 Friction characteristic plot activation / Friction plot act

SERVO, VECTOR

Can be changed: T		**Access level:** 2
Data type: Integer16	**Data set:** -	**Function diagram:** 7010
P-Group: Functions	**Units group:** -	**Unit selection:** -
Min	**Max**	**Factory setting**
0	3	0

Description: Setting for the friction characteristic plot.

After the next power-on command, the friction characteristic is automatically plotted.

Values:
0: Friction characteristic plot de-activated
1: Friction char. plot activated for all directions of rotation
2: Friction char. plot activated for a pos. direction of rotation
3: Friction char. plot activated for a neg. direction of rotation

Notice: In order to permanently accept the determined settings they must be saved in a non-volatile fashion (p0971, p0977).

Note: When the friction characteristic plot is active, it is not possible to save the parameters (p0971, p0977). The drive data set changeover is suppressed.

When the friction characteristic plot is active (p3845 > 0), it is not possible to change p3820 ... p3829, p3830 ... p3839, p3842, p3846 and p3847.

When plotting the friction characteristic, in addition to the friction, the motor losses are also determined (e.g. iron losses, eddy current losses and re-magnetization losses). A differentiation is not made between these individual loss components. We recommend that a motor temperature sensor is used because torque deviations can also be emulated/mapped on the characteristic due to the thermal influence.

© Siemens AG, 2005. All rights reserved

p3846[0...n] Friction characteristic plot ramp-up/ramp-down time / Frict plot t_up/dn

SERVO, VECTOR (n/M)	**Can be changed:** T		**Access level:** 2
	Data type: Floating Point	**Data set:** DDS	**Function diagram:** 7010
	P-Group: Functions	**Units group:** TIME	**Unit selection:** -
	Min	**Max**	**Factory setting**
	0.000 [s]	999999.000 [s]	10.000 [s]

Description: Sets the ramp-up/ramp-down time of the ramp-up/ramp-down function generator to automatically plot the friction characteristic. The drive is accelerated from standstill (setpoint = 0) up to the maximum speed/velocity (p1082) in this time.

Dependency: Refer to: p3845

p3847[0...n] Friction characteristic plot warm-up time / Frict plot t_warm

SERVO, VECTOR (n/M)	**Can be changed:** T		**Access level:** 2
	Data type: Floating Point	**Data set:** DDS	**Function diagram:** 7010
	P-Group: Functions	**Units group:** TIME	**Unit selection:** -
	Min	**Max**	**Factory setting**
	0.000 [s]	3600.000 [s]	0.000 [s]

Description: Sets the warm-up time.

For an automatic trace (plot) to start, the highest selected speed (p3829) is approached and this time is held. After this, the measurement is started with the highest speed.

Dependency: Refer to: p3829, p3845

p3870 Long stator configuration / Long stator config

SERVO	**Can be changed:** U, T		**Access level:** 3
	Data type: Unsigned16	**Data set:** -	**Function diagram:** -
	P-Group: -	**Units group:** -	**Unit selection:** -
	Min	**Max**	**Factory setting**
	0000 bin	0011 bin	0000 bin

Description: Sets the configuration when operating a long stator motor.

Bit field:

Bit	Signal name	0 signal	1 signal	FP
00	Activate long stator help functions	not active	active	-
01	Suppress Gx_ZSW.14	not active	active	-

Dependency: Refer to: p3871, p3872, p3873, p3874, r3875, p3876, p3878, p3879

Notice: The following restrictions apply to this function:

- it is not permissible to change over the drive data set.
- the encoder/drive may not be parked using a PROFIBUS telegram.
- a maximum of 4 drives may be connected to the Control Unit.
- it is not permissible to commutate with the zero mark (p0404).

Note: Re bit 0:

All of the help functions for long stator motors can be enabled/disabled using this bit.

Re bit 1:

Bit 14 (parking encoder active) is always set to 0 in the encoder status word GX_ZSW independent of whether the encoder is parked or not.

© Siemens AG, 2005. All rights reserved

p3871 BI: Set long stator signal source commutation angle (p3872) / Set s_src com_ang

SERVO

Can be changed: T		**Access level:** 3
Data type: Unsigned32	**Data set:** -	**Function diagram:** -
P-Group: -	**Units group:** -	**Unit selection:** -
Min	**Max**	**Factory setting**
-	-	0

Description: Sets the signal source to set the commutation angle from CI: p3872.

Dependency: Refer to: p3870, p3872, p3873, p3874, r3875, p3876, p3878, p3879

Danger! If an incorrect commutation angle is set, this can result in instability in the closed-loop control and in turn injure personnel or cause damage to the machine !

Note: Setting takes place for a 0/1 signal edge.

p3872 CI: Long stator signal source commutation angle / S_src com_angle

SERVO

Can be changed: T		**Access level:** 3
Data type: Unsigned32	**Data set:** -	**Function diagram:** -
P-Group: -	**Units group:** -	**Unit selection:** -
Min	**Max**	**Factory setting**
-	-	3878[0]

Description: Sets the signal source for the commutation angle.
This angle is set for a 0/1 signal edge via BI: p3871.

Dependency: Refer to: p3870, p3871, p3873, r3875, p3876, p3878, p3879

Danger! If an incorrect commutation angle is set, this can result in instability in the closed-loop control and in turn injure personnel or cause damage to the machine !

p3873 BI: Long stator sig. source to change over to cl.-loop ctrl w/ enc. / S_src ctrl w/ enc

SERVO

Can be changed: T		**Access level:** 3
Data type: Unsigned32	**Data set:** -	**Function diagram:** -
P-Group: Functions	**Units group:** -	**Unit selection:** -
Min	**Max**	**Factory setting**
-	-	0

Description: Sets the signal source to change over to closed-loop control with encoder.

Dependency: Refer to: p3870, p3871, p3872, p3874, r3875, p3876, p3878, p3879

Danger! If an incorrect commutation angle is set, this can result in instability in the closed-loop control and in turn injure personnel or cause damage to the machine !

Note: = 1 --> closed-loop control with encoder
= 0 --> sensorless closed-loop control
For a 0/1 edge, the commutation angle is set from CI: p3874.

p3874 CI: Long stator signal source commutation angle oper. with encoder / S_src com_ang enc

SERVO

Can be changed: T		**Access level:** 3
Data type: Unsigned32	**Data set:** -	**Function diagram:** -
P-Group: -	**Units group:** -	**Unit selection:** -
Min	**Max**	**Factory setting**
-	-	3879[0]

Description: Sets the signal source for the commutation angle for operation with encoder.

Dependency: Refer to: p3870, p3871, p3872, p3873, r3875, p3876, p3878, p3879

Note: This angle is set for a 0/1 signal edge via BI: p3873.

© Siemens AG, 2005. All rights reserved

r3875 CO/BO: Long stator status word / ZSW

SERVO	**Can be changed:** -		**Access level:** 3
	Data type: Unsigned32	**Data set:** -	**Function diagram:** -
	P-Group: -	**Units group:** -	**Unit selection:** -
	Min	**Max**	**Factory setting**
	-	-	-

Description: Displays the status word for long stator motors.

Bit field:

Bit	Signal name	0 signal	1 signal	FP
00	Encoder module is unparked	No	Yes	-
01	Closed-loop speed control with encoder requested	not active	active	-

Dependency: Refer to: p3870, p3871, p3872, p3873, p3874, p3876, p3878, p3879

Note: Re bit 0:

=1: The encoder is parked. Contrary to r481.14, parking is also displayed here if the suppression of the parking bit is active in r481.14 (p3870.1=1).

Re bit 1:

=1: The long-stator functions requested closed-loop speed control with encoder. Read r1407.2 to identify whether an encoder is actually being used for closed-loop control.

The display is updated in a 1ms clock cycle.

p3876 BI: Unpark long stator signal source 1 encoder / S_src enc_unpark 1

SERVO	**Can be changed:** T		**Access level:** 3
	Data type: Unsigned32	**Data set:** -	**Function diagram:** -
	P-Group: -	**Units group:** -	**Unit selection:** -
	Min	**Max**	**Factory setting**
	-	-	0

Description: Sets the signal source 1 to unpark the encoder.

Dependency: Refer to: p3870, p3871, p3872, p3873, p3874, r3875, p3878, p3879

Note: = 1 --> Encoder is unparked

= 0 --> Encoder is parked

p3878 CO: Long stator commutation angle 1 / Commut_ang 1

SERVO	**Can be changed:** U, T		**Access level:** 3
	Data type: Floating Point	**Data set:** -	**Function diagram:** -
	P-Group: -	**Units group:** ANGLE	**Unit selection:** -
	Min	**Max**	**Factory setting**
	-180 [°]	180 [°]	0 [°]

Description: Enters the commutation angle 1 for long stator motors.

Dependency: Refer to: p3870, p3871, p3872, p3873, p3874, r3875, p3876, p3879

p3879 CO: Long stator commutation angle 2 / Commut_ang 2

SERVO	**Can be changed:** U, T		**Access level:** 3
	Data type: Floating Point	**Data set:** -	**Function diagram:** -
	P-Group: -	**Units group:** ANGLE	**Unit selection:** -
	Min	**Max**	**Factory setting**
	-180 [°]	180 [°]	0 [°]

Description: Enters the commutation angle 2 for long stator motors.

Dependency: Refer to: p3870, p3871, p3872, p3873, p3874, r3875, p3876, p3878

© Siemens AG, 2005. All rights reserved

p3900 Completion of quick commissioning / End quick_comm

A_INF, B_INF, S_INF

Can be changed: C2(1)		**Access level:** 1
Data type: Integer16	**Data set:** -	**Function diagram:** -
P-Group: -	**Units group:** -	**Unit selection:** -
Min	**Max**	**Factory setting**
0	3	0

Description: Used to calculate all of the dependent parameters when exiting the quick commissioning (p0010 = 1).

Values:
0: No quick parameterization
1: Quick parameterization after parameter reset
2: Quick param. (only) for controller parameters and reset for BIC
3: Completion of quick commissioning

Note: p3900 = 1 initially resets the parameters (factory setting) for all parameters of the drive object without overwriting the entries made during the quick commissioning.

When the calculations have been completed, p3900 and p0010 are automatically reset to a value of 0.

For active infeeds (Active Line Module and Smart Line Module) the following applies:

For p3900 = 1 or 2, p0340 = 1 is always called and the appropriate parameters calculated (refer to p0340).

p3900 Completion of quick commissioning / End quick_comm

SERVO, VECTOR

Can be changed: C2(1)		**Access level:** 1
Data type: Integer16	**Data set:** -	**Function diagram:** -
P-Group: Displays, signals	**Units group:** -	**Unit selection:** -
Min	**Max**	**Factory setting**
0	3	0

Description: Exits the quick commissioning (p0010 = 1) with automatic calculation of all of the parameters that depend on the entries made during the quick commissioning.

p3900 = 1 initially includes a parameter reset (factory setting, the same as p0970 = 1) for all parameters of the drive object; however, without overwriting the entries made during the quick commissioning.

The interconnections of PROFIBUS PZD telegram selection (p0922) and the interconnections via p0700, p1000 and p1500 are re-established and all of the dependent motor, open-loop and control-loop control parameters are calculated (corresponding to p0340 = 1).

p3900 = 2 includes the restoration of the interconnections of PROFIBUS PZD telegram selection (p0922) and the interconnections via p0700, p1000 and p1500 and the calculations corresponding to p0340 = 1.

p3900 = 3 only includes the calculations associated with the motor, open-loop and closed-loop control parameters corresponding to p0340 = 1.

Values:
0: No quick parameterization
1: Quick parameterization after parameter reset
2: Quick parameterization (only) for BICO and motor parameters
3: Quick parameterization for motor parameters (only)

Note: When the calculations have been completed, p3900 and p0010 are automatically reset to a value of 0.

When calculating motor, open-loop and closed-loop control parameters (such as for p0340 = 1) parameters associated with a selected Siemens list motor are not overwritten.

p3902[0...n] Power module EEPROM Vdc calibration / PM EEPROM Vdc_cal

A_INF, B_INF, SERVO, S_INF, VECTOR

Can be changed: C1, C2(1), T		**Access level:** 3
Data type: Unsigned32	**Data set:** PDS	**Function diagram:** -
P-Group: -	**Units group:** -	**Unit selection:** -
Min	**Max**	**Factory setting**
0	4294967295	0

Description: Calibration factor for the DC link voltage measurement.

Caution! Incorrect use of the calibration can have a negative impact on the closed-loop control.

Note: The parameter only has an effect for chassis-type power modules.

Calculation algorithm: p3902_new = p3902_alt * r0026 / Vdc_measured value

© Siemens AG, 2005. All rights reserved

p3950 Service parameter / Service parameter

CU_S	**Can be changed:** C1, U, T		**Access level:** 4
	Data type: Unsigned16	**Data set:** -	**Function diagram:** -
	P-Group: -	**Units group:** -	**Unit selection:** -
	Min	**Max**	**Factory setting**
	0	65535	0

Description: For service personnel only.

p3981 Faults, acknowledge drive object / Faults ackn DO

All objects	**Can be changed:** U, T		**Access level:** 2
	Data type: Unsigned8	**Data set:** -	**Function diagram:** 2501
	P-Group: Messages	**Units group:** -	**Unit selection:** -
	Min	**Max**	**Factory setting**
	0	1	0

Description: Acknowledges all active faults of a drive object.

Note: Parameter should be set from 0 to 1 to acknowledge.
After acknowledgement, the parameter is automatically reset to 0.

p3985 Master control mode selection / PcCtrl mode select

A_INF, B_INF, SERVO, S_INF, VECTOR	**Can be changed:** U, T		**Access level:** 3
	Data type: Integer16	**Data set:** -	**Function diagram:** -
	P-Group: Setpoints	**Units group:** -	**Unit selection:** -
	Min	**Max**	**Factory setting**
	0	1	0

Description: Sets the mode to change over the master control / LOCAL mode.

Values:
0: Change master control for STW1.0 = 0
1: Change master control in operation

Danger! When changing the master control in operation, the drive can manifest undesirable behavior - e.g. it can accelerate up to another setpoint.

r3986 No. of parameters / No. of parameters

All objects	**Can be changed:** -		**Access level:** 3
	Data type: Unsigned16	**Data set:** -	**Function diagram:** -
	P-Group: -	**Units group:** -	**Unit selection:** -
	Min	**Max**	**Factory setting**
	-	-	-

Description: Displays the number of parameters for this drive unit.
The number comprises the device-specific and the drive-specific parameters.

Dependency: Refer to: r0980, r0981, r0989

r3988 Ramp-up state / Ramp-up state

CU_S	**Can be changed:** -		**Access level:** 4
	Data type: Integer16	**Data set:** -	**Function diagram:** -
	P-Group: -	**Units group:** -	**Unit selection:** -
	Min	**Max**	**Factory setting**
	-	-	-

Description: Displays the ramp-up state.

© Siemens AG, 2005. All rights reserved

Values:

0: Not active
1: Fatal fault
10: Fault
20: Reset all parameters
30: Drive object modified
40: Download using commissioning software
90: Reset Control Unit and delete drive objects
100: Start initialization
110: Instantiate Control Unit basis
150: Wait until actual topology determined
160: Evaluate topology
170: Instantiate Control Unit rest
180: Initialization YDB configuration information
200: First commissioning
210: Create drive packages
250: Wait for topology acknowledge
325: Wait for input of drive type
350: Determine drive type
360: Write into topology-dependent parameters
370: Wait until p0009 = 0 is set
380: Check topology
550: Call conversion functions for parameter
625: Wait non-cyclic starting DRIVE CLiQ
650: Start cyclic operation
660: Evaluate drive commissioning status
680: Wait for CU link slaves
700: Save parameters
725: Wait until DRIVE-CLiQ cyclic
740: Check the ability to operate
750: Interrupt enable
800: Initialization finished

r3996 State, inhibit parameter write / State, inhib par

All objects

Can be changed: -
Access level: 1
Data type: Unsigned8
Data set: -
Function diagram: -
P-Group: -
Units group: -
Unit selection: -

Min	Max	Factory setting
-	-	-

Description: Indicates whether writing to parameters is inhibited. And percentage of the progress of the process that set the inhibit.

Value 0 not inhibited, values 1 - 100 inhibited.

r4021 TB30 digital inputs terminal actual value / TB30 DI act value

TB30

Can be changed: -
Access level: 2
Data type: Unsigned32
Data set: -
Function diagram: 9100
P-Group: Commands
Units group: -
Unit selection: -

Min	Max	Factory setting
-	-	-

Description: Displays the actual value at the digital inputs.

This means that the actual input signal can be checked at terminal DI x prior to switching from the simulation mode (p4095.x = 1) to the terminal mode (p4095.x = 0). The input signal of terminal DI x is displayed in bit x of r4021.

Bit field:

Bit	Signal name	0 signal	1 signal	FP
00	DI 0 (X481.1)	Low	High	-
01	DI 1 (X481.2)	Low	High	-
02	DI 2 (X481.3)	Low	High	-
03	DI 3 (X481.4)	Low	High	-

Note: DI: Digital Input

© Siemens AG, 2005. All rights reserved

r4021 TM31 digital inputs terminal actual value / TM31 DI act value

TM31

Can be changed: -
Access level: 2
Data type: Unsigned32
Data set: -
Function diagram: 1840, 9550, 9552, 9560, 9562
P-Group: Commands
Units group: -
Unit selection: -

Min	Max	Factory setting
-	-	-

Description: Displays the actual value at the digital inputs.

This means that the actual input signal can be checked at terminal DI x or DI/DO x prior to switching from the simulation mode (p4095.x = 1) to terminal mode (p4095.x = 0). The input signal at terminal DI x or DI/DO x is displayed in bit x of r4021.

Bit field:

Bit	Signal name	0 signal	1 signal	FP
00	DI 0 (X520.1)	Low	High	-
01	DI 1 (X520.2)	Low	High	-
02	DI 2 (X520.3)	Low	High	-
03	DI 3 (X520.4)	Low	High	-
04	DI 4 (X530.1)	Low	High	-
05	DI 5 (X530.2)	Low	High	-
06	DI 6 (X530.3)	Low	High	-
07	DI 7 (X530.4)	Low	High	-
08	DI/DO 8 (X541.2)	Low	High	-
09	DI/DO 9 (X541.3)	Low	High	-
10	DI/DO 10 (X541.4)	Low	High	-
11	DI/DO 11 (X541.5)	Low	High	-

Note: If a DI/DO is parameterized as output (p4028.x = 1), then r4021.x = 0 is displayed.

DI: Digital Input

DI/DO: Bidirectional Digital Input/Output

r4021 TM41 digital inputs terminal actual value / TM41 DI act val

TM41

Can be changed: -
Access level: 2
Data type: Unsigned32
Data set: -
Function diagram: -
P-Group: Commands
Units group: -
Unit selection: -

Min	Max	Factory setting
-	-	-

Description: Displays the actual value at the digital inputs.

This means that the actual input signal can be checked at terminal DI x or DI/DO x prior to switching from the simulation mode (p4095.x = 1) to terminal mode (p4095.x = 0). The input signal at terminal DI x or DI/DO x is displayed in bit x of r4021.

Bit field:

Bit	Signal name	0 signal	1 signal	FP
00	DI 0 (X522.1)	Low	High	-
01	DI 1 (X522.2)	Low	High	-
02	DI 2 (X522.3)	Low	High	-
03	DI 3 (X522.4)	Low	High	-
08	DI/DO 0 (X241.1)	Low	High	-
09	DI/DO 1 (X521.2)	Low	High	-
10	DI/DO 2 (X521.3)	Low	High	-
11	DI/DO 3 (X521.4)	Low	High	-

Note: If a DI/DO is parameterized as output (p4028.x = 1), then r4021.x = 0 is displayed.

DI: Digital Input

DI/DO: Bidirectional Digital Input/Output

© Siemens AG, 2005. All rights reserved

r4021 TM15DI/DO digital inputs, terminal actual value / TM15D DI act val

TM15DI/DO

Can be changed: -
Access level: 2
Data type: Unsigned32
Data set: -
Function diagram: 9400, 9401, 9402
P-Group: Commands
Units group: -
Unit selection: -

Min	Max	Factory setting
-	-	-

Description: Displays the actual value at the digital inputs.

This means that the actual input signal can be checked at terminal DI x or DI/DO x prior to switching from the simulation mode (p4095.x = 1) to terminal mode (p4095.x = 0). The input signal at terminal DI x or DI/DO x is displayed in bit x of r4021.

Bit field:

Bit	Signal name	0 signal	1 signal	FP
00	DI/DO 0 (X520.2)	Low	High	-
01	DI/DO 1 (X520.3)	Low	High	-
02	DI/DO 2 (X520.4)	Low	High	-
03	DI/DO 3 (X520.5)	Low	High	-
04	DI/DO 4 (X520.6)	Low	High	-
05	DI/DO 5 (X520.7)	Low	High	-
06	DI/DO 6 (X520.8)	Low	High	-
07	DI/DO 7 (X520.9)	Low	High	-
08	DI/DO 8 (X521.2)	Low	High	-
09	DI/DO 9 (X521.3)	Low	High	-
10	DI/DO 10 (X521.4)	Low	High	-
11	DI/DO 11 (X521.5)	Low	High	-
12	DI/DO 12 (X521.6)	Low	High	-
13	DI/DO 13 (X521.7)	Low	High	-
14	DI/DO 14 (X521.8)	Low	High	-
15	DI/DO 15 (X521.9)	Low	High	-
16	DI/DO 16 (X522.2)	Low	High	-
17	DI/DO 17 (X522.3)	Low	High	-
18	DI/DO 18 (X522.4)	Low	High	-
19	DI/DO 19 (X522.5)	Low	High	-
20	DI/DO 20 (X522.6)	Low	High	-
21	DI/DO 21 (X522.7)	Low	High	-
22	DI/DO 22 (X522.8)	Low	High	-
23	DI/DO 23 (X522.9)	Low	High	-

Note: If a DI/DO is parameterized as output (p4028.x = 1), then r4021.x = 0 is displayed.

DI/DO: Bidirectional Digital Input/Output

r4022 CO/BO: TB30 digital inputs, status / TB30 DI status

TB30

Can be changed: -
Access level: 1
Data type: Unsigned32
Data set: -
Function diagram: 1790, 9100
P-Group: Commands
Units group: -
Unit selection: -

Min	Max	Factory setting
-	-	-

Description: Displays the status of the digital inputs of the Terminal Board 30 (TB30).

Bit field:

Bit	Signal name	0 signal	1 signal	FP
00	DI 0 (X481.1)	Low	High	-
01	DI 1 (X481.2)	Low	High	-
02	DI 2 (X481.3)	Low	High	-
03	DI 3 (X481.4)	Low	High	-

Dependency: Refer to: r4023

Note: DI: Digital Input

© Siemens AG, 2005. All rights reserved

r4022 CO/BO: TM31 digital inputs, status / TM31 DI status

TM31

Can be changed: -
Access level: 1
Data type: Unsigned32
Data set: -
Function diagram: 1840, 9550, 9552, 9560, 9562
P-Group: Commands
Units group: -
Unit selection: -

Min	Max	Factory setting
-	-	-

Description: Displays the status of the digital inputs of terminal module 31 (TM31).

Bit field:

Bit	Signal name	0 signal	1 signal	FP
00	DI 0 (X520.1)	Low	High	-
01	DI 1 (X520.2)	Low	High	-
02	DI 2 (X520.3)	Low	High	-
03	DI 3 (X520.4)	Low	High	-
04	DI 4 (X530.1)	Low	High	-
05	DI 5 (X530.2)	Low	High	-
06	DI 6 (X530.3)	Low	High	-
07	DI 7 (X530.4)	Low	High	-
08	DI/DO 8 (X541.2)	Low	High	-
09	DI/DO 9 (X541.3)	Low	High	-
10	DI/DO 10 (X541.4)	Low	High	-
11	DI/DO 11 (X541.5)	Low	High	-

Dependency: Refer to: r4023

Note: DI: Digital Input
DI/DO: Bidirectional Digital Input/Output

r4022 CO/BO: TM41 digital inputs, status / TM41 DI status

TM41

Can be changed: -
Access level: 1
Data type: Unsigned32
Data set: -
Function diagram: 1840, 9550, 9552, 9560, 9562
P-Group: Commands
Units group: -
Unit selection: -

Min	Max	Factory setting
-	-	-

Description: Displays the status of the digital inputs of terminal module 41 (TM41).

Bit field:

Bit	Signal name	0 signal	1 signal	FP
00	DI 0 (X522.1)	Low	High	-
01	DI 1 (X522.2)	Low	High	-
02	DI 2 (X522.3)	Low	High	-
03	DI 3 (X522.4)	Low	High	-
08	DI/DO 0 (X241.1)	Low	High	-
09	DI/DO 1 (X521.2)	Low	High	-
10	DI/DO 2 (X521.3)	Low	High	-
11	DI/DO 3 (X521.4)	Low	High	-

Dependency: Refer to: r4023

Note: DI: Digital Input
DI/DO: Bidirectional Digital Input/Output

© Siemens AG, 2005. All rights reserved

r4022 CO/BO: TM15DI/DO digital inputs, status / TM15D DI status

TM15DI/DO

Can be changed: -
Access level: 1
Data type: Unsigned32
Data set: -
Function diagram: -
P-Group: Commands
Units group: -
Unit selection: -

Min	Max	Factory setting
-	-	-

Description: Displays the status of the digital inputs of terminal module 15 (TM15).

Bit field:

Bit	Signal name	0 signal	1 signal	FP
00	DI/DO 0 (X520.2)	Low	High	-
01	DI/DO 1 (X520.3)	Low	High	-
02	DI/DO 2 (X520.4)	Low	High	-
03	DI/DO 3 (X520.5)	Low	High	-
04	DI/DO 4 (X520.6)	Low	High	-
05	DI/DO 5 (X520.7)	Low	High	-
06	DI/DO 6 (X520.8)	Low	High	-
07	DI/DO 7 (X520.9)	Low	High	-
08	DI/DO 8 (X521.2)	Low	High	-
09	DI/DO 9 (X521.3)	Low	High	-
10	DI/DO 10 (X521.4)	Low	High	-
11	DI/DO 11 (X521.5)	Low	High	-
12	DI/DO 12 (X521.6)	Low	High	-
13	DI/DO 13 (X521.7)	Low	High	-
14	DI/DO 14 (X521.8)	Low	High	-
15	DI/DO 15 (X521.9)	Low	High	-
16	DI/DO 16 (X522.2)	Low	High	-
17	DI/DO 17 (X522.3)	Low	High	-
18	DI/DO 18 (X522.4)	Low	High	-
19	DI/DO 19 (X522.5)	Low	High	-
20	DI/DO 20 (X522.6)	Low	High	-
21	DI/DO 21 (X522.7)	Low	High	-
22	DI/DO 22 (X522.8)	Low	High	-
23	DI/DO 23 (X522.9)	Low	High	-

Dependency: Refer to: r4023
Note: DI/DO: Bidirectional Digital Input/Output

r4023 BO: TB30 digital inputs, status inverted / TB30 DI status inv

TB30

Can be changed: -
Access level: 1
Data type: Unsigned32
Data set: -
Function diagram: 1790, 9100
P-Group: Commands
Units group: -
Unit selection: -

Min	Max	Factory setting
-	-	-

Description: Displays the inverted status of the digital inputs of the Terminal Board 30 (TB30).

Bit field:

Bit	Signal name	0 signal	1 signal	FP
00	DI 0 (X481.1)	Low	High	-
01	DI 1 (X481.2)	Low	High	-
02	DI 2 (X481.3)	Low	High	-
03	DI 3 (X481.4)	Low	High	-

Dependency: Refer to: r4022
Note: DI: Digital Input

© Siemens AG, 2005. All rights reserved

r4023 CO/BO: TM31 digital inputs, status inverted / TM31 DI status inv

TM31

Can be changed: -
Access level: 1
Data type: Unsigned32
Data set: -
Function diagram: 1840, 9550, 9552, 9560, 9562
P-Group: Commands
Units group: -
Unit selection: -

Min	Max	Factory setting
-	-	-

Description: Displays the inverted status of the digital inputs of terminal module 31 (TM31).

Bit field:

Bit	Signal name	0 signal	1 signal	FP
00	DI 0 (X520.1)	Low	High	-
01	DI 1 (X520.2)	Low	High	-
02	DI 2 (X520.3)	Low	High	-
03	DI 3 (X520.4)	Low	High	-
04	DI 4 (X530.1)	Low	High	-
05	DI 5 (X530.2)	Low	High	-
06	DI 6 (X530.3)	Low	High	-
07	DI 7 (X530.4)	Low	High	-
08	DI/DO 8 (X541.2)	Low	High	-
09	DI/DO 9 (X541.3)	Low	High	-
10	DI/DO 10 (X541.4)	Low	High	-
11	DI/DO 11 (X541.5)	Low	High	-

Dependency: Refer to: r4022

Note: DI: Digital Input
DI/DO: Bidirectional Digital Input/Output

r4023 BO: TM41 digital inputs, status inverted / TM41 DI status inv

TM41

Can be changed: -
Access level: 1
Data type: Unsigned32
Data set: -
Function diagram: 1840, 9550, 9552, 9560, 9562
P-Group: Commands
Units group: -
Unit selection: -

Min	Max	Factory setting
-	-	-

Description: Displays the inverted status of the digital inputs of terminal module 41 (TM41).

Bit field:

Bit	Signal name	0 signal	1 signal	FP
00	DI 0 (X522.1)	Not inverted	Inverted	-
01	DI 1 (X522.2)	Not inverted	Inverted	-
02	DI 2 (X522.3)	Not inverted	Inverted	-
03	DI 3 (X522.4)	Not inverted	Inverted	-
08	DI/DO 0 (X521.1)	Not inverted	Inverted	-
09	DI/DO 1 (X521.2)	Not inverted	Inverted	-
10	DI/DO 2 (X521.3)	Not inverted	Inverted	-
11	DI/DO 3 (X521.4)	Not inverted	Inverted	-

Dependency: Refer to: r4022

Note: DI: Digital Input
DI/DO: Bidirectional Digital Input/Output

© Siemens AG, 2005. All rights reserved

r4023 CO/BO: TM15DI/DO digital inputs, status inverted / TM15D DI stat inv

TM15DI/DO

Can be changed: -
Access level: 1
Data type: Unsigned32
Data set: -
Function diagram: 9400, 9401, 9402
P-Group: Commands
Units group: -
Unit selection: -

Min	Max	Factory setting
-	-	-

Description: Displays the inverted status of the digital inputs of terminal module 15 (TM15).

Bit field:

Bit	Signal name	0 signal	1 signal	FP
00	DI/DO 0 (X520.2)	Low	High	-
01	DI/DO 1 (X520.3)	Low	High	-
02	DI/DO 2 (X520.4)	Low	High	-
03	DI/DO 3 (X520.5)	Low	High	-
04	DI/DO 4 (X520.6)	Low	High	-
05	DI/DO 5 (X520.7)	Low	High	-
06	DI/DO 6 (X520.8)	Low	High	-
07	DI/DO 7 (X520.9)	Low	High	-
08	DI/DO 8 (X521.2)	Low	High	-
09	DI/DO 9 (X521.3)	Low	High	-
10	DI/DO 10 (X521.4)	Low	High	-
11	DI/DO 11 (X521.5)	Low	High	-
12	DI/DO 12 (X521.6)	Low	High	-
13	DI/DO 13 (X521.7)	Low	High	-
14	DI/DO 14 (X521.8)	Low	High	-
15	DI/DO 15 (X521.9)	Low	High	-
16	DI/DO 16 (X522.2)	Low	High	-
17	DI/DO 17 (X522.3)	Low	High	-
18	DI/DO 18 (X522.4)	Low	High	-
19	DI/DO 19 (X522.5)	Low	High	-
20	DI/DO 20 (X522.6)	Low	High	-
21	DI/DO 21 (X522.7)	Low	High	-
22	DI/DO 22 (X522.8)	Low	High	-
23	DI/DO 23 (X522.9)	Low	High	-

Dependency: Refer to: r4022
Note: DI/DO: Bidirectional Digital Input/Output

p4028 TM31 set input or output / TM31 DI or DO

TM31

Can be changed: T
Access level: 1
Data type: Unsigned32
Data set: -
Function diagram: 1840, 9560, 9562
P-Group: Commands
Units group: -
Unit selection: -

Min	Max	Factory setting
0000 bin	1111 1111 1111 1111 bin	0000 bin

Description: Sets the bidirectional digital inputs/outputs as input or output on the terminal module 31 (TM31).

Bit field:

Bit	Signal name	0 signal	1 signal	FP
08	DI/DO 8 (X541.2)	Input	Output	-
09	DI/DO 9 (X541.3)	Input	Output	-
10	DI/DO 10 (X541.4)	Input	Output	-
11	DI/DO 11 (X541.5)	Input	Output	-

© Siemens AG, 2005. All rights reserved

p4028 TM41 set input or output / TM41 DI or DO

TM41

Can be changed: T | **Access level:** 1

Data type: Unsigned32 | **Data set:** - | **Function diagram:** 1840, 9560, 9562

P-Group: Commands | **Units group:** - | **Unit selection:** -

Min	Max	Factory setting
0000 bin	1111 1111 1111 1111 bin	0000 bin

Description: Sets the bidirectional digital inputs/outputs on the terminal module 41 (TM41) as input or output.

Bit field:

Bit	Signal name	0 signal	1 signal	FP
08	DI/DO 0 (X521.1)	Input	Output	-
09	DI/DO 1 (X521.2)	Input	Output	-
10	DI/DO 2 (X521.3)	Input	Output	-
11	DI/DO 3 (X521.4)	Input	Output	-

p4028 TM17 set input or output / TM17 DI or DO

TM17

Can be changed: T | **Access level:** 2

Data type: Unsigned32 | **Data set:** - | **Function diagram:** -

P-Group: Commands | **Units group:** - | **Unit selection:** -

Min	Max	Factory setting
0000 bin	1111 1111 1111 1111 bin	0000 bin

Description: Sets the bidirectional digital inputs/outputs on the terminal module 17 (TM17) as input or output.

Bit field:

Bit	Signal name	0 signal	1 signal	FP
00	DI/DO 0 (X520.2)	Input	Output	-
01	DI/DO 1 (X520.3)	Input	Output	-
02	DI/DO 2 (X520.5)	Input	Output	-
03	DI/DO 3 (X520.6)	Input	Output	-
04	DI/DO 4 (X520.8)	Input	Output	-
05	DI/DO 5 (X520.9)	Input	Output	-
06	DI/DO 6 (X521.2)	Input	Output	-
07	DI/DO 7 (X521.3)	Input	Output	-
08	DI/DO 8 (X521.8)	Input	Output	-
09	DI/DO 9 (X521.9)	Input	Output	-
10	DI/DO 10 (X522.2)	Input	Output	-
11	DI/DO 11 (X522.3)	Input	Output	-
12	DI/DO 12 (X522.5)	Input	Output	-
13	DI/DO 13 (X522.6)	Input	Output	-
14	DI/DO 14 (X522.8)	Input	Output	-
15	DI/DO 15 (X522.9)	Input	Output	-

Note: DI/DO: Bidirectional Digital Input/Output

© Siemens AG, 2005. All rights reserved

p4028 TM15 set input or output / TM15 DI or DO

TM15

Can be changed: T | **Access level:** 2

Data type: Unsigned32 | **Data set:** - | **Function diagram:** -

P-Group: Commands | **Units group:** - | **Unit selection:** -

Min	Max	Factory setting
0000 bin	0000 0000 1111 1111 1111 1111 1111 1111 bin	0000 bin

Description: Sets the bidirectional digital inputs/outputs on the terminal module 15 (TM15) as input or output.

Bit field:

Bit	Signal name	0 signal	1 signal	FP
00	DI/DO 0 (X520.2)	Input	Output	-
01	DI/DO 1 (X520.3)	Input	Output	-
02	DI/DO 2 (X520.4)	Input	Output	-
03	DI/DO 3 (X520.5)	Input	Output	-
04	DI/DO 4 (X520.6)	Input	Output	-
05	DI/DO 5 (X520.7)	Input	Output	-
06	DI/DO 6 (X520.8)	Input	Output	-
07	DI/DO 7 (X520.9)	Input	Output	-
08	DI/DO 8 (X521.2)	Input	Output	-
09	DI/DO 9 (X521.3)	Input	Output	-
10	DI/DO 10 (X521.4)	Input	Output	-
11	DI/DO 11 (X521.5)	Input	Output	-
12	DI/DO 12 (X521.6)	Input	Output	-
13	DI/DO 13 (X521.7)	Input	Output	-
14	DI/DO 14 (X521.8)	Input	Output	-
15	DI/DO 15 (X521.9)	Input	Output	-
16	DI/DO 16 (X522.2)	Input	Output	-
17	DI/DO 17 (X522.3)	Input	Output	-
18	DI/DO 18 (X522.4)	Input	Output	-
19	DI/DO 19 (X522.5)	Input	Output	-
20	DI/DO 20 (X522.6)	Input	Output	-
21	DI/DO 21 (X522.7)	Input	Output	-
22	DI/DO 22 (X522.8)	Input	Output	-
23	DI/DO 23 (X522.9)	Input	Output	-

Note: DI/DO: Bidirectional Digital Input/Output

© Siemens AG, 2005. All rights reserved

p4028 TM15DI/DO set input or output / TM15D DI or DO

TM15DI/DO

Can be changed: T | **Access level:** 1

Data type: Unsigned32 | **Data set:** - | **Function diagram:** 9400, 9401, 9402

P-Group: Commands | **Units group:** - | **Unit selection:** -

Min	Max	Factory setting
0000 bin	0000 0000 1111 1111 1111 1111 1111 1111 bin	0000 bin

Description: Sets the bidirectional digital inputs/outputs on the terminal module 15 (TM15) as input or output.

Bit field:

Bit	Signal name	0 signal	1 signal	FP
00	DI/DO 0 (X520.2)	Input	Output	-
01	DI/DO 1 (X520.3)	Input	Output	-
02	DI/DO 2 (X520.4)	Input	Output	-
03	DI/DO 3 (X520.5)	Input	Output	-
04	DI/DO 4 (X520.6)	Input	Output	-
05	DI/DO 5 (X520.7)	Input	Output	-
06	DI/DO 6 (X520.8)	Input	Output	-
07	DI/DO 7 (X520.9)	Input	Output	-
08	DI/DO 8 (X521.2)	Input	Output	-
09	DI/DO 9 (X521.3)	Input	Output	-
10	DI/DO 10 (X521.4)	Input	Output	-
11	DI/DO 11 (X521.5)	Input	Output	-
12	DI/DO 12 (X521.6)	Input	Output	-
13	DI/DO 13 (X521.7)	Input	Output	-
14	DI/DO 14 (X521.8)	Input	Output	-
15	DI/DO 15 (X521.9)	Input	Output	-
16	DI/DO 16 (X522.2)	Input	Output	-
17	DI/DO 17 (X522.3)	Input	Output	-
18	DI/DO 18 (X522.4)	Input	Output	-
19	DI/DO 19 (X522.5)	Input	Output	-
20	DI/DO 20 (X522.6)	Input	Output	-
21	DI/DO 21 (X522.7)	Input	Output	-
22	DI/DO 22 (X522.8)	Input	Output	-
23	DI/DO 23 (X522.9)	Input	Output	-

Note: DI/DO: Bidirectional Digital Input/Output

p4030 BI: TB30 signal source for terminal DO 0 / TB30 S_src DO 0

TB30

Can be changed: U, T | **Access level:** 1

Data type: Unsigned32 | **Data set:** - | **Function diagram:** 1790, 9102

P-Group: Commands | **Units group:** - | **Unit selection:** -

Min	Max	Factory setting
-	-	0

Description: Sets the signal source for digital output DO 0 (X481.5) of the Terminal Board 30 (TB30).

Note: DO: Digital output

© Siemens AG, 2005. All rights reserved

p4030 BI: TM31 signal source for terminal DO 0 / TM31 S_src DO 0

TM31	**Can be changed:** U, T		**Access level:** 1
	Data type: Unsigned32	**Data set:** -	**Function diagram:** 1840, 9556
	P-Group: Commands	**Units group:** -	**Unit selection:** -
	Min	**Max**	**Factory setting**
	-	-	0

Description: Sets the signal source for the digital output DO 0 (X542.1, X542.2, X542.3) of terminal module 31 (TM31).
Digital output 0 of TM31 is a relay output.
If the signal at the binector input p4030 is low, then terminal COM 0 (X542.2) is connected to NC 0 (X542.1). This connection also matches the mechanical quiescent setting of the relay.
If the signal at the binector input p4030 is high, then terminal COM 0 (X542.2) is connected to NO 0 (X542.3).

Note: DO: Digital output
NC: Normally closed contact
NO: Normally open contact

p4030 BI: TM15DI/DO signal source for terminal DI/DO 0 / TM15D S_srcDI/DO 0

TM15DI/DO	**Can be changed:** U, T		**Access level:** 1
	Data type: Unsigned32	**Data set:** -	**Function diagram:** 9400
	P-Group: Commands	**Units group:** -	**Unit selection:** -
	Min	**Max**	**Factory setting**
	-	-	0

Description: Sets the signal source for terminal DI/DO 0 (X520.2) of terminal module 15 (TM15).

Note: Prerequisite: The DI/DO must be set as an output (p4028.0 = 1).
DI/DO: Bidirectional Digital Input/Output

p4031 BI: TB30 signal source for terminal DO 1 / TB30 S_src DO 1

TB30	**Can be changed:** U, T		**Access level:** 1
	Data type: Unsigned32	**Data set:** -	**Function diagram:** 9102
	P-Group: Commands	**Units group:** -	**Unit selection:** -
	Min	**Max**	**Factory setting**
	-	-	0

Description: Sets the signal source for terminal DO 1 (X481.6) of the Terminal Board 30 (TB30).

Note: DO: Digital output

p4031 BI: TM31 signal source for terminal DO 1 / TM31 S_src DO 1

TM31	**Can be changed:** U, T		**Access level:** 1
	Data type: Unsigned32	**Data set:** -	**Function diagram:** 1840, 9556
	P-Group: Commands	**Units group:** -	**Unit selection:** -
	Min	**Max**	**Factory setting**
	-	-	0

Description: Sets the signal source for the digital output DO 1 (X542.4, X542.5, X542.6) of terminal module 31 (TM31).
Digital output 1 of TM31 is a relay output.
If the signal at the binector input p4031 is low, then terminal COM 1 (X542.5) is connected to NC 1 (X542.4). This connection also matches the mechanical quiescent setting of the relay.
If the signal at the binector input p4031 is high, then terminal COM 1 (X542.5) is connected to NO 1 (X542.6).

Note: DO: Digital output
NC: Normally closed contact
NO: Normally open contact

© Siemens AG, 2005. All rights reserved

p4031 **BI: TM15DI/DO signal source for terminal DI/DO 1 / TM15D S_srcDI/DO 1**

TM15DI/DO	**Can be changed:** U, T		**Access level:** 1
	Data type: Unsigned32	**Data set:** -	**Function diagram:** 9400
	P-Group: Commands	**Units group:** -	**Unit selection:** -
	Min	**Max**	**Factory setting**
	-	-	0

Description: Sets the signal source for terminal DI/DO 1 (X520.3) of terminal module 15 (TM15).
Note: Prerequisite: The DI/DO must be set as an output (p4028.1 = 1).
DI/DO: Bidirectional Digital Input/Output

p4032 **BI: TB30 signal source for terminal DO 2 / TB30 S_src DO 2**

TB30	**Can be changed:** U, T		**Access level:** 1
	Data type: Unsigned32	**Data set:** -	**Function diagram:** 9102
	P-Group: Commands	**Units group:** -	**Unit selection:** -
	Min	**Max**	**Factory setting**
	-	-	0

Description: Sets the signal source for terminal DO 2 (X481.7) of the Terminal Board 30 (TB30).
Note: DO: Digital output

p4032 **BI: TM15DI/DO signal source for terminal DI/DO 2 / TM15D S_srcDI/DO 2**

TM15DI/DO	**Can be changed:** U, T		**Access level:** 1
	Data type: Unsigned32	**Data set:** -	**Function diagram:** 9400
	P-Group: Commands	**Units group:** -	**Unit selection:** -
	Min	**Max**	**Factory setting**
	-	-	0

Description: Sets the signal source for terminal DI/DO 2 (X520.4) of terminal module 15 (TM15).
Note: Prerequisite: The DI/DO must be set as an output (p4028.2 = 1).
DI/DO: Bidirectional Digital Input/Output

p4033 **BI: TB30 signal source for terminal DO 3 / TB30 S_src DO 3**

TB30	**Can be changed:** U, T		**Access level:** 1
	Data type: Unsigned32	**Data set:** -	**Function diagram:** 1790, 9102
	P-Group: Commands	**Units group:** -	**Unit selection:** -
	Min	**Max**	**Factory setting**
	-	-	0

Description: Sets the signal source for terminal DO 3 (X481.8) of the Terminal Board 30 (TB30).
Note: DO: Digital output

p4033 **BI: TM15DI/DO signal source for terminal DI/DO 3 / TM15D S_srcDI/DO 3**

TM15DI/DO	**Can be changed:** U, T		**Access level:** 1
	Data type: Unsigned32	**Data set:** -	**Function diagram:** 9400
	P-Group: Commands	**Units group:** -	**Unit selection:** -
	Min	**Max**	**Factory setting**
	-	-	0

Description: Sets the signal source for terminal DI/DO 3 (X520.5) of terminal module 15 (TM15).
Note: Prerequisite: The DI/DO must be set as an output (p4028.3 = 1).
DI/DO: Bidirectional Digital Input/Output

© Siemens AG, 2005. All rights reserved

p4034 BI: TM15DI/DO signal source for terminal DI/DO 4 / TM15D S_srcDI/DO 4

TM15DI/DO	**Can be changed:** U, T		**Access level:** 1
	Data type: Unsigned32	**Data set:** -	**Function diagram:** 9400
	P-Group: Commands	**Units group:** -	**Unit selection:** -
	Min	**Max**	**Factory setting**
	-	-	0

Description: Sets the signal source for terminal DI/DO 4 (X520.6) of terminal module 15 (TM15).
Note: Prerequisite: The DI/DO must be set as an output (p4028.4 = 1).
DI/DO: Bidirectional Digital Input/Output

p4035 BI: TM15DI/DO signal source for terminal DI/DO 7 / TM15D S_srcDI/DO 7

TM15DI/DO	**Can be changed:** U, T		**Access level:** 1
	Data type: Unsigned32	**Data set:** -	**Function diagram:** 9400
	P-Group: Commands	**Units group:** -	**Unit selection:** -
	Min	**Max**	**Factory setting**
	-	-	0

Description: Sets the signal source for terminal DI/DO 5 (X520.7) of terminal module 15 (TM15).
Note: Prerequisite: The DI/DO must be set as an output (p4028.5 = 1).
DI/DO: Bidirectional Digital Input/Output

p4036 BI: TM15DI/DO signal source for terminal DI/DO 6 / TM15D S_srcDI/DO 6

TM15DI/DO	**Can be changed:** U, T		**Access level:** 1
	Data type: Unsigned32	**Data set:** -	**Function diagram:** 9400
	P-Group: Commands	**Units group:** -	**Unit selection:** -
	Min	**Max**	**Factory setting**
	-	-	0

Description: Sets the signal source for terminal DI/DO 6 (X520.8) of terminal module 15 (TM15).
Note: Prerequisite: The DI/DO must be set as an output (p4028.6 = 1).
DI/DO: Bidirectional Digital Input/Output

p4037 BI: TM15DI/DO signal source for terminal DI/DO 7 / TM15D S_srcDI/DO 7

TM15DI/DO	**Can be changed:** U, T		**Access level:** 1
	Data type: Unsigned32	**Data set:** -	**Function diagram:** 9400
	P-Group: Commands	**Units group:** -	**Unit selection:** -
	Min	**Max**	**Factory setting**
	-	-	0

Description: Sets the signal source for terminal DI/DO 7 (X520.9) of terminal module 15 (TM15).
Note: Prerequisite: The DI/DO must be set as an output (p4028.7 = 1).
DI/DO: Bidirectional Digital Input/Output

© Siemens AG, 2005. All rights reserved

p4038 BI: TM31 signal source for terminal DI/DO 8 / TM31 S_src DI/DO 8

TM31	**Can be changed:** U, T		**Access level:** 1
	Data type: Unsigned32	**Data set:** -	**Function diagram:** 1840, 9560
	P-Group: Commands	**Units group:** -	**Unit selection:** -
	Min	**Max**	**Factory setting**
	-	-	0

Description: Sets the signal source for terminal DI/DO 8 (X541.2) of terminal module 31 (TM31).
Note: Prerequisite: The DI/DO must be set as an output (p4028.8 = 1).
DI/DO: Bidirectional Digital Input/Output

p4038 BI: TM41 signal source for terminal DI/DO 8 / TM41 S_src DI/DO 8

TM41	**Can be changed:** U, T		**Access level:** 1
	Data type: Unsigned32	**Data set:** -	**Function diagram:** -
	P-Group: Commands	**Units group:** -	**Unit selection:** -
	Min	**Max**	**Factory setting**
	-	-	0

Description: Sets the signal source for terminal DI/DO 8 (X521.1) of terminal module 41 (TM41).
Note: Prerequisite: The DI/DO must be set as an output (p4028.8 = 1).
DI/DO: Bidirectional Digital Input/Output

p4038 BI: TM15DI/DO signal source for terminal DI/DO 8 / TM15D S_srcDI/DO 8

TM15DI/DO	**Can be changed:** U, T		**Access level:** 1
	Data type: Unsigned32	**Data set:** -	**Function diagram:** 9401
	P-Group: Commands	**Units group:** -	**Unit selection:** -
	Min	**Max**	**Factory setting**
	-	-	0

Description: Sets the signal source for terminal DI/DO 8 (X521.2) of terminal module 15 (TM15).
Note: Prerequisite: The DI/DO must be set as an output (p4028.8 = 1).
DI/DO: Bidirectional Digital Input/Output

p4039 BI: TM31 signal source for terminal DI/DO 9 / TM31 S_src DI/DO 9

TM31	**Can be changed:** U, T		**Access level:** 1
	Data type: Unsigned32	**Data set:** -	**Function diagram:** 9560
	P-Group: Commands	**Units group:** -	**Unit selection:** -
	Min	**Max**	**Factory setting**
	-	-	0

Description: Sets the signal source for terminal DI/DO 9 (X541.3) of terminal module 31 (TM31).
Note: Prerequisite: The DI/DO must be set as an output (p4028.9 = 1).
DI/DO: Bidirectional Digital Input/Output

© Siemens AG, 2005. All rights reserved

p4039 **BI: TM41 signal source for terminal DI/DO 9 / TM41 S_src DI/DO 9**

TM41

Can be changed: U, T		**Access level:** 1
Data type: Unsigned32	**Data set:** -	**Function diagram:** -
P-Group: Commands	**Units group:** -	**Unit selection:** -
Min	**Max**	**Factory setting**
-	-	0

Description: Sets the signal source for terminal DI/DO 1 (X541.2) of terminal module 41 (TM41).
Note: Prerequisite: The DI/DO must be set as an output (p4028.9 = 1).
DI/DO: Bidirectional Digital Input/Output

p4039 **BI: TM15DI/DO signal source for terminal DI/DO 9 / TM15D S_srcDI/DO 9**

TM15DI/DO

Can be changed: U, T		**Access level:** 1
Data type: Unsigned32	**Data set:** -	**Function diagram:** 9401
P-Group: Commands	**Units group:** -	**Unit selection:** -
Min	**Max**	**Factory setting**
-	-	0

Description: Sets the signal source for terminal DI/DO 9 (X521.3) of terminal module 15 (TM15).
Note: Prerequisite: The DI/DO must be set as an output (p4028.9 = 1).
DI/DO: Bidirectional Digital Input/Output

p4040 **BI: TM31 signal source for terminal DI/DO 10 / TM31 S_src DI/DO10**

TM31

Can be changed: U, T		**Access level:** 1
Data type: Unsigned32	**Data set:** -	**Function diagram:** 9562
P-Group: Commands	**Units group:** -	**Unit selection:** -
Min	**Max**	**Factory setting**
-	-	0

Description: Sets the signal source for terminal DI/DO 10 (X541.4) of terminal module 31 (TM31).
Note: Prerequisite: The DI/DO must be set as an output (p4028.10 = 1).
DI/DO: Bidirectional Digital Input/Output

p4040 **BI: TM41 signal source for terminal DI/DO 10 / TM41 S_src DI/DO10**

TM41

Can be changed: U, T		**Access level:** 1
Data type: Unsigned32	**Data set:** -	**Function diagram:** -
P-Group: Commands	**Units group:** -	**Unit selection:** -
Min	**Max**	**Factory setting**
-	-	0

Description: Sets the signal source for terminal DI/DO 2 (X541.3) of terminal module 41 (TM41).
Note: Prerequisite: The DI/DO must be set as an output (p4028.10 = 1).
DI/DO: Bidirectional Digital Input/Output

p4040 **BI: TM15DI/DO signal source for terminal DI/DO 10 / TM15D S_srcDI/DO10**

TM15DI/DO

Can be changed: U, T		**Access level:** 1
Data type: Unsigned32	**Data set:** -	**Function diagram:** 9401
P-Group: Commands	**Units group:** -	**Unit selection:** -
Min	**Max**	**Factory setting**
-	-	0

Description: Sets the signal source for terminal DI/DO 10 (X521.4) of terminal module 15 (TM15).
Note: Prerequisite: The DI/DO must be set as an output (p4028.10 = 1).
DI/DO: Bidirectional Digital Input/Output

© Siemens AG, 2005. All rights reserved

p4041 **BI: TM31 signal source for terminal DI/DO 11 / TM31 S_src DI/DO11**

TM31	**Can be changed:** U, T		**Access level:** 1
	Data type: Unsigned32	**Data set:** -	**Function diagram:** 1840, 9562
	P-Group: Commands	**Units group:** -	**Unit selection:** -
	Min	**Max**	**Factory setting**
	-	-	0

Description: Sets the signal source for terminal DI/DO 11 (X541.5) of terminal module 31 (TM31).
Note: Prerequisite: The DI/DO must be set as an output (p4028.11 = 1).
DI/DO: Bidirectional Digital Input/Output

p4041 **BI: TM41 signal source for terminal DI/DO 11 / TM41 S_src DI/DO11**

TM41	**Can be changed:** U, T		**Access level:** 1
	Data type: Unsigned32	**Data set:** -	**Function diagram:** -
	P-Group: Commands	**Units group:** -	**Unit selection:** -
	Min	**Max**	**Factory setting**
	-	-	0

Description: Sets the signal source for terminal DI/DO 3 (X521.4) of terminal module 41 (TM41).
Note: Prerequisite: The DI/DO must be set as an output (p4028.11 = 1).
DI/DO: Bidirectional Digital Input/Output

p4041 **BI: TM15DI/DO signal source for terminal DI/DO 11 / TM15D S_srcDI/DO11**

TM15DI/DO	**Can be changed:** U, T		**Access level:** 1
	Data type: Unsigned32	**Data set:** -	**Function diagram:** 9401
	P-Group: Commands	**Units group:** -	**Unit selection:** -
	Min	**Max**	**Factory setting**
	-	-	0

Description: Sets the signal source for terminal DI/DO 11 (X521.5) of terminal module 15 (TM15).
Note: Prerequisite: The DI/DO must be set as an output (p4028.11 = 1).
DI/DO: Bidirectional Digital Input/Output

p4042 **BI: TM15DI/DO signal source for terminal DI/DO 12 / TM15D S_srcDI/DO12**

TM15DI/DO	**Can be changed:** U, T		**Access level:** 1
	Data type: Unsigned32	**Data set:** -	**Function diagram:** 9401
	P-Group: Commands	**Units group:** -	**Unit selection:** -
	Min	**Max**	**Factory setting**
	-	-	0

Description: Sets the signal source for terminal DI/DO 12 (X521.6) of terminal module 15 (TM15).
Note: Prerequisite: The DI/DO must be set as an output (p4028.12 = 1).
DI/DO: Bidirectional Digital Input/Output

© Siemens AG, 2005. All rights reserved

p4043 BI: TM15DI/DO signal source for terminal DI/DO 13 / TM15D S_srcDI/DO13

TM15DI/DO	**Can be changed:** U, T		**Access level:** 1
	Data type: Unsigned32	**Data set:** -	**Function diagram:** 9401
	P-Group: Commands	**Units group:** -	**Unit selection:** -
	Min	**Max**	**Factory setting**
	-	-	0

Description: Sets the signal source for terminal DI/DO 13 (X521.7) of terminal module 15 (TM15).

Note: Prerequisite: The DI/DO must be set as an output (p4028.13 = 1).
DI/DO: Bidirectional Digital Input/Output

p4044 BI: TM15DI/DO signal source for terminal DI/DO 14 / TM15D S_srcDI/DO14

TM15DI/DO	**Can be changed:** U, T		**Access level:** 1
	Data type: Unsigned32	**Data set:** -	**Function diagram:** 9401
	P-Group: Commands	**Units group:** -	**Unit selection:** -
	Min	**Max**	**Factory setting**
	-	-	0

Description: Sets the signal source for terminal DI/DO 14 (X521.8) of terminal module 15 (TM15).

Note: Prerequisite: The DI/DO must be set as an output (p4028.14 = 1).
DI/DO: Bidirectional Digital Input/Output

p4045 BI: TM15DI/DO signal source for terminal DI/DO 15 / TM15D S_srcDI/DO15

TM15DI/DO	**Can be changed:** U, T		**Access level:** 1
	Data type: Unsigned32	**Data set:** -	**Function diagram:** 9401
	P-Group: Commands	**Units group:** -	**Unit selection:** -
	Min	**Max**	**Factory setting**
	-	-	0

Description: Sets the signal source for terminal DI/DO 15 (X521.9) of terminal module 15 (TM15).

Note: Prerequisite: The DI/DO must be set as an output (p4028.15 = 1).
DI/DO: Bidirectional Digital Input/Output

p4046 TM31 digital outputs, limit current / TM31 DO limit curr

TM31	**Can be changed:** T		**Access level:** 2
	Data type: Integer16	**Data set:** -	**Function diagram:** 9560
	P-Group: Commands	**Units group:** -	**Unit selection:** -
	Min	**Max**	**Factory setting**
	0	1	0

Description: Sets the limit for the total output voltage of terminals X541.1, X541.2, X541.3 and X541.4 (DI/DO 8 ... 11) of terminal module 31 (TM31).

Values:
0: 0.1 A total current limit DI/DO 8 ... 11
1: 1.0 A total current limit DI/DO 8 ... 11

Dependency: Refer to: p4028

Warning! Since the sum of the output currents at terminals X541.1, X541.2, X541.3 and X541.4 is limited, an overcurrent or short circuit at one output terminal can cause a dip in the signal at the other terminals.

© Siemens AG, 2005. All rights reserved

r4047 TB30 digital outputs status / TB30 DO status

TB30

Can be changed: -
Access level: 1
Data type: Unsigned32
Data set: -
Function diagram: 9102
P-Group: Commands
Units group: -
Unit selection: -

Min	Max	Factory setting
-	-	-

Description: Displays the status of the digital outputs of the Terminal Board 30 (TB30).

Bit field:

Bit	Signal name	0 signal	1 signal	FP
00	DO 0 (X481.5)	Low	High	-
01	DO 1 (X481.6)	Low	High	-
02	DO 2 (X481.7)	Low	High	-
03	DO 3 (X481.8)	Low	High	-

Note: Inversion using p4048 has been taken into account.
DO: Digital output

r4047 TM31 digital outputs status / TM31 DO status

TM31

Can be changed: -
Access level: 1
Data type: Unsigned32
Data set: -
Function diagram: 9556, 9560, 9562
P-Group: Commands
Units group: -
Unit selection: -

Min	Max	Factory setting
-	-	-

Description: Displays the status of the digital outputs of terminal module 31 (TM31).

Bit field:

Bit	Signal name	0 signal	1 signal	FP
00	DO 0 (X542.1 - 3)	Low	High	-
01	DO 1 (X542.4 - 6)	Low	High	-
08	DI/DO 8 (X541.2)	Low	High	-
09	DI/DO 9 (X541.3)	Low	High	-
10	DI/DO 10 (X541.4)	Low	High	-
11	DI/DO 11 (X541.5)	Low	High	-

Note: Inversion using p4048 has been taken into account.
The setting of the DI/DO as either input or output is of no significance (p4028).
DO: Digital output
DI/DO: Bidirectional Digital Input/Output

r4047 TM41 digital outputs status / TM41 DO status

TM41

Can be changed: -
Access level: 1
Data type: Unsigned32
Data set: -
Function diagram: 9556, 9560, 9562
P-Group: Commands
Units group: -
Unit selection: -

Min	Max	Factory setting
-	-	-

Description: Displays the status of the digital outputs of terminal module 41 (TM41).

Bit field:

Bit	Signal name	0 signal	1 signal	FP
08	DI/DO 0 (X521.1)	Low	High	-
09	DI/DO 1 (X521.2)	Low	High	-
10	DI/DO 2 (X521.3)	Low	High	-
11	DI/DO 3 (X521.4)	Low	High	-

Note: Inversion using p4048 has been taken into account.
The setting of the DI/DO as either input or output is of no significance (p4028).
DO: Digital output
DI/DO: Bidirectional Digital Input/Output

© Siemens AG, 2005. All rights reserved

r4047 TM15DI/DO digital outputs, status / TM15D DO status

TM15DI/DO

Can be changed: -
Access level: 1
Data type: Unsigned32
Data set: -
Function diagram: 9400, 9401, 9402
P-Group: Commands
Units group: -
Unit selection: -

Min	Max	Factory setting
-	-	-

Description: Displays the status of the digital outputs of terminal module 15 (TM15).

Bit field:

Bit	Signal name	0 signal	1 signal	FP
00	DI/DO 0 (X520.2)	Low	High	-
01	DI/DO 1 (X520.3)	Low	High	-
02	DI/DO 2 (X520.4)	Low	High	-
03	DI/DO 3 (X520.5)	Low	High	-
04	DI/DO 4 (X520.6)	Low	High	-
05	DI/DO 5 (X520.7)	Low	High	-
06	DI/DO 6 (X520.8)	Low	High	-
07	DI/DO 7 (X520.9)	Low	High	-
08	DI/DO 8 (X521.2)	Low	High	-
09	DI/DO 9 (X521.3)	Low	High	-
10	DI/DO 10 (X521.4)	Low	High	-
11	DI/DO 11 (X521.5)	Low	High	-
12	DI/DO 12 (X521.6)	Low	High	-
13	DI/DO 13 (X521.7)	Low	High	-
14	DI/DO 14 (X521.8)	Low	High	-
15	DI/DO 15 (X521.9)	Low	High	-
16	DI/DO 16 (X522.2)	Low	High	-
17	DI/DO 17 (X522.3)	Low	High	-
18	DI/DO 18 (X522.4)	Low	High	-
19	DI/DO 19 (X522.5)	Low	High	-
20	DI/DO 20 (X522.6)	Low	High	-
21	DI/DO 21 (X522.7)	Low	High	-
22	DI/DO 22 (X522.8)	Low	High	-
23	DI/DO 23 (X522.9)	Low	High	-

Note: Inversion using p4048 has been taken into account.
The setting of the DI/DO as either input or output is of no significance (p4028).
DI/DO: Bidirectional Digital Input/Output

p4048 TB30 invert digital outputs / TB30 DO invert

TB30

Can be changed: U, T
Access level: 1
Data type: Unsigned32
Data set: -
Function diagram: 9102
P-Group: Commands
Units group: -
Unit selection: -

Min	Max	Factory setting
0000 bin	1111 bin	0000 bin

Description: Setting to invert the signals at the digital outputs of the Terminal Board 30 (TB30).

Bit field:

Bit	Signal name	0 signal	1 signal	FP
00	DO 0 (X481.5)	Not inverted	Inverted	-
01	DO 1 (X481.6)	Not inverted	Inverted	-
02	DO 2 (X481.7)	Not inverted	Inverted	-
03	DO 3 (X481.8)	Not inverted	Inverted	-

Note: DO: Digital output

© Siemens AG, 2005. All rights reserved

p4048 TM31 invert digital outputs / TM31 DO invert

TM31

Can be changed: U, T | **Access level:** 1

Data type: Unsigned32 | **Data set:** - | **Function diagram:** 9556, 9560, 9562

P-Group: Commands | **Units group:** - | **Unit selection:** -

Min	Max	Factory setting
0000 bin	0000 1111 1111 1111 bin	0000 bin

Description: Setting to invert the signals at the digital outputs of terminal module 31 (TM31).

Bit field:

Bit	Signal name	0 signal	1 signal	FP
00	DO 0 (X542.1 - 3)	Not inverted	Inverted	-
01	DO 1 (X542.4 - 6)	Not inverted	Inverted	-
08	DI/DO 8 (X541.2)	Not inverted	Inverted	-
09	DI/DO 9 (X541.3)	Not inverted	Inverted	-
10	DI/DO 10 (X541.4)	Not inverted	Inverted	-
11	DI/DO 11 (X541.5)	Not inverted	Inverted	-

Note: DO: Digital output
DI/DO: Bidirectional Digital Input/Output

p4048 TM41 invert digital outputs / TM41 DO invert

TM41

Can be changed: U, T | **Access level:** 1

Data type: Unsigned32 | **Data set:** - | **Function diagram:** 9556, 9560, 9562

P-Group: Commands | **Units group:** - | **Unit selection:** -

Min	Max	Factory setting
0000 bin	0000 1111 1111 1111 bin	0000 bin

Description: Setting to invert the signals at the digital outputs of terminal module 41 (TM41).

Bit field:

Bit	Signal name	0 signal	1 signal	FP
08	DI/DO 0 (X521.1)	Not inverted	Inverted	-
09	DI/DO 1 (X521.2)	Not inverted	Inverted	-
10	DI/DO 2 (X521.3)	Not inverted	Inverted	-
11	DI/DO 3 (X521.4)	Not inverted	Inverted	-

Note: DO: Digital output
DI/DO: Bidirectional Digital Input/Output

© Siemens AG, 2005. All rights reserved

p4048 TM17 invert digital inputs/outputs / TM17 DI/DO invert

TM17	**Can be changed:** U, T		**Access level:** 2
	Data type: Unsigned32	**Data set:** -	**Function diagram:** -
	P-Group: Commands	**Units group:** -	**Unit selection:** -
	Min	**Max**	**Factory setting**
	0000 bin	1111 1111 1111 1111 bin	0000 bin

Description: Setting to invert the signals at the digital inputs/outputs of terminal module 17 (TM17).

Bit field:

Bit	Signal name	0 signal	1 signal	FP
00	DI/DO 0 (X520.2)	Not inverted	Inverted	-
01	DI/DO 1 (X520.3)	Not inverted	Inverted	-
02	DI/DO 2 (X520.5)	Not inverted	Inverted	-
03	DI/DO 3 (X520.6)	Not inverted	Inverted	-
04	DI/DO 4 (X520.8)	Not inverted	Inverted	-
05	DI/DO 5 (X520.9)	Not inverted	Inverted	-
06	DI/DO 6 (X521.2)	Not inverted	Inverted	-
07	DI/DO 7 (X521.3)	Not inverted	Inverted	-
08	DI/DO 8 (X521.8)	Not inverted	Inverted	-
09	DI/DO 9 (X521.9)	Not inverted	Inverted	-
10	DI/DO 10 (X522.2)	Not inverted	Inverted	-
11	DI/DO 11 (X522.3)	Not inverted	Inverted	-
12	DI/DO 12 (X522.5)	Not inverted	Inverted	-
13	DI/DO 13 (X522.6)	Not inverted	Inverted	-
14	DI/DO 14 (X522.8)	Not inverted	Inverted	-
15	DI/DO 15 (X522.9)	Not inverted	Inverted	-

Note: DI/DO: Bidirectional Digital Input/Output

© Siemens AG, 2005. All rights reserved

p4048 TM15 invert digital inputs/outputs / TM15 DI/DO invert

TM15	**Can be changed:** U, T		**Access level:** 2
	Data type: Unsigned32	**Data set:** -	**Function diagram:** -
	P-Group: Commands	**Units group:** -	**Unit selection:** -
	Min	**Max**	**Factory setting**
	0000 bin	0000 0000 1111 1111 1111 1111 1111 1111 bin	0000 bin

Description: Setting to invert the signals at the digital inputs/outputs of terminal module 15 (TM15).

Bit field:

Bit	Signal name	0 signal	1 signal	FP
00	DI/DO 0 (X520.2)	Not inverted	Inverted	-
01	DI/DO 1 (X520.3)	Not inverted	Inverted	-
02	DI/DO 2 (X520.4)	Not inverted	Inverted	-
03	DI/DO 3 (X520.5)	Not inverted	Inverted	-
04	DI/DO 4 (X520.6)	Not inverted	Inverted	-
05	DI/DO 5 (X520.7)	Not inverted	Inverted	-
06	DI/DO 6 (X520.8)	Not inverted	Inverted	-
07	DI/DO 7 (X520.9)	Not inverted	Inverted	-
08	DI/DO 8 (X521.2)	Not inverted	Inverted	-
09	DI/DO 9 (X521.3)	Not inverted	Inverted	-
10	DI/DO 10 (X522.4)	Not inverted	Inverted	-
11	DI/DO 11 (X521.5)	Not inverted	Inverted	-
12	DI/DO 12 (X521.6)	Not inverted	Inverted	-
13	DI/DO 13 (X521.7)	Not inverted	Inverted	-
14	DI/DO 14 (X521.8)	Not inverted	Inverted	-
15	DI/DO 15 (X521.9)	Not inverted	Inverted	-
16	DI/DO 16 (X522.2)	Not inverted	Inverted	-
17	DI/DO 17 (X522.3)	Not inverted	Inverted	-
18	DI/DO 18 (X522.4)	Not inverted	Inverted	-
19	DI/DO 19 (X522.5)	Not inverted	Inverted	-
20	DI/DO 20 (X522.6)	Not inverted	Inverted	-
21	DI/DO 21 (X522.7)	Not inverted	Inverted	-
22	DI/DO 22 (X522.8)	Not inverted	Inverted	-
23	DI/DO 23 (X522.9)	Not inverted	Inverted	-

Note: DI/DO: Bidirectional Digital Input/Output

© Siemens AG, 2005. All rights reserved

p4048 TM15DI/DO invert digital outputs / TM15D DO invert

TM15DI/DO

Can be changed: U, T | **Access level:** 1

Data type: Unsigned32 | **Data set:** - | **Function diagram:** 9400, 9401, 9402

P-Group: Commands | **Units group:** - | **Unit selection:** -

Min	Max	Factory setting
0000 bin	0000 0000 1111 1111 1111 1111 1111 1111 bin	0000 bin

Description: Setting to invert the signals at the digital outputs of terminal module 15 (TM15).

Bit field:

Bit	Signal name	0 signal	1 signal	FP
00	DI/DO 0 (X520.2)	Not inverted	Inverted	-
01	DI/DO 1 (X520.3)	Not inverted	Inverted	-
02	DI/DO 2 (X520.4)	Not inverted	Inverted	-
03	DI/DO 3 (X520.5)	Not inverted	Inverted	-
04	DI/DO 4 (X520.6)	Not inverted	Inverted	-
05	DI/DO 5 (X520.7)	Not inverted	Inverted	-
06	DI/DO 6 (X520.8)	Not inverted	Inverted	-
07	DI/DO 7 (X520.9)	Not inverted	Inverted	-
08	DI/DO 8 (X521.2)	Not inverted	Inverted	-
09	DI/DO 9 (X521.3)	Not inverted	Inverted	-
10	DI/DO 10 (X521.4)	Not inverted	Inverted	-
11	DI/DO 11 (X521.5)	Not inverted	Inverted	-
12	DI/DO 12 (X521.6)	Not inverted	Inverted	-
13	DI/DO 13 (X521.7)	Not inverted	Inverted	-
14	DI/DO 14 (X521.8)	Not inverted	Inverted	-
15	DI/DO 15 (X521.9)	Not inverted	Inverted	-
16	DI/DO 16 (X522.2)	Not inverted	Inverted	-
17	DI/DO 17 (X522.3)	Not inverted	Inverted	-
18	DI/DO 18 (X522.4)	Not inverted	Inverted	-
19	DI/DO 19 (X522.5)	Not inverted	Inverted	-
20	DI/DO 20 (X522.6)	Not inverted	Inverted	-
21	DI/DO 21 (X522.7)	Not inverted	Inverted	-
22	DI/DO 22 (X522.8)	Not inverted	Inverted	-
23	DI/DO 23 (X522.9)	Not inverted	Inverted	-

Note: DI/DO: Bidirectional Digital Input/Output

© Siemens AG, 2005. All rights reserved

p4049 TM17 digital inputs/outputs, set the mode / TM17 DI/DO mode

TM17	**Can be changed:** T		**Access level:** 2
	Data type: Unsigned32	**Data set:** -	**Function diagram:** -
	P-Group: Commands	**Units group:** -	**Unit selection:** -
	Min	**Max**	**Factory setting**
	0000 bin	1111 1111 1111 1111 bin	0000 bin

Description: Sets the mode of the DI/DO of terminal module 17 (TM17).

Bit field:

Bit	Signal name	0 signal	1 signal	FP
00	DI/DO 0 (X520.2)	I/O	I/O with time	-
01	DI/DO 1 (X520.3)	I/O	I/O with time	-
02	DI/DO 2 (X520.5)	I/O	I/O with time	-
03	DI/DO 3 (X520.6)	I/O	I/O with time	-
04	DI/DO 4 (X520.8)	I/O	I/O with time	-
05	DI/DO 5 (X520.9)	I/O	I/O with time	-
06	DI/DO 6 (X521.2)	I/O	I/O with time	-
07	DI/DO 7 (X521.3)	I/O	I/O with time	-
08	DI/DO 8 (X521.8)	I/O	I/O with time	-
09	DI/DO 9 (X521.9)	I/O	I/O with time	-
10	DI/DO 10 (X522.2)	I/O	I/O with time	-
11	DI/DO 11 (X522.3)	I/O	I/O with time	-
12	DI/DO 12 (X522.5)	I/O	I/O with time	-
13	DI/DO 13 (X522.6)	I/O	I/O with time	-
14	DI/DO 14 (X522.8)	I/O	I/O with time	-
15	DI/DO 15 (X522.9)	I/O	I/O with time	-

Note: DI/DO: Bidirectional Digital Input/Output

© Siemens AG, 2005. All rights reserved

p4049 TM15 digital inputs/outputs, set the mode / TM15 DI/DO mode

TM15

Can be changed: T | **Access level:** 2

Data type: Unsigned32 | **Data set:** - | **Function diagram:** -

P-Group: Commands | **Units group:** - | **Unit selection:** -

Min	Max	Factory setting
0000 bin	0000 0000 1111 1111 1111 1111 1111 1111 bin	0000 bin

Description: Sets the mode of the DI/DOs of terminal module 15 (TM15).

Bit field:

Bit	Signal name	0 signal	1 signal	FP
00	DI/DO 0 (X520.2)	I/O	I/O with time	-
01	DI/DO 1 (X520.3)	I/O	I/O with time	-
02	DI/DO 2 (X520.4)	I/O	I/O with time	-
03	DI/DO 3 (X520.5)	I/O	I/O with time	-
04	DI/DO 4 (X520.6)	I/O	I/O with time	-
05	DI/DO 5 (X520.7)	I/O	I/O with time	-
06	DI/DO 6 (X520.8)	I/O	I/O with time	-
07	DI/DO 7 (X520.9)	I/O	I/O with time	-
08	DI/DO 8 (X521.2)	I/O	I/O with time	-
09	DI/DO 9 (X521.3)	I/O	I/O with time	-
10	DI/DO 10 (X522.4)	I/O	I/O with time	-
11	DI/DO 11 (X521.5)	I/O	I/O with time	-
12	DI/DO 12 (X521.6)	I/O	I/O with time	-
13	DI/DO 13 (X521.7)	I/O	I/O with time	-
14	DI/DO 14 (X521.8)	I/O	I/O with time	-
15	DI/DO 15 (X521.9)	I/O	I/O with time	-
16	DI/DO 16 (X522.2)	I/O	I/O with time	-
17	DI/DO 17 (X522.3)	I/O	I/O with time	-
18	DI/DO 18 (X522.4)	I/O	I/O with time	-
19	DI/DO 19 (X522.5)	I/O	I/O with time	-
20	DI/DO 20 (X522.6)	I/O	I/O with time	-
21	DI/DO 21 (X522.7)	I/O	I/O with time	-
22	DI/DO 22 (X522.8)	I/O	I/O with time	-
23	DI/DO 23 (X522.9)	I/O	I/O with time	-

Note: DI/DO: Bidirectional Digital Input/Output

r4052[0...1] TB30 analog inputs, actual input voltage / TB30 AI input_U

TB30

Can be changed: - | **Access level:** 1

Data type: Floating Point | **Data set:** - | **Function diagram:** 9104

P-Group: Terminals | **Units group:** VOLTAGE_AC_PP | **Unit selection:** -

Min	Max	Factory setting
- [V]	- [V]	- [V]

Description: Displays the actual input voltage at the analog inputs of the Terminal Board 30 (TB30).

Index: [0] = AI 0 (X482.1/X482.2)
[1] = AI 1 (X482.3/X482.4)

Note: AI: Analog input

© Siemens AG, 2005. All rights reserved

r4052[0...1] TM31 analog inputs, actual input voltage/current / TM31 AI input_U/I

TM31	**Can be changed:** -		**Access level:** 1
	Data type: Floating Point	**Data set:** -	**Function diagram:** 9566, 9568
	P-Group: Terminals	**Units group:** -	**Unit selection:** -
	Min	**Max**	**Factory setting**
	-	-	-

Description: Displays the actual input voltage in V when set as voltage input.
Displays the actual input current in mA when set as current input and with the load resistor switched-in.

Index: [0] = AI 0 (X521.1/X521.2, S5.0)
[1] = AI 1 (X521.3/X521.4, S5.1)

Dependency: The type of analog input AI x (voltage or current input) is set using p4056.
Refer to: r4056, p4056

Note: AI: Analog input

r4052[0...0] TB41 analog inputs, actual input voltage / TM41 AI input_U

TM41	**Can be changed:** -		**Access level:** 1
	Data type: Floating Point	**Data set:** -	**Function diagram:** 9566, 9568
	P-Group: Terminals	**Units group:** -	**Unit selection:** -
	Min	**Max**	**Factory setting**
	-	-	-

Description: Displays the actual input voltage in V.

Index: [0] = AI 0 (X521.1/X521.2, S5.0)

Note: AI: Analog input

p4053[0...1] TB30 analog inputs, smoothing time constant / TB30 AI T_smooth

TB30	**Can be changed:** U, T		**Access level:** 1
	Data type: Floating Point	**Data set:** -	**Function diagram:** 9104
	P-Group: Terminals	**Units group:** TIME_M3	**Unit selection:** -
	Min	**Max**	**Factory setting**
	0.0 [ms]	1000.0 [ms]	0.0 [ms]

Description: Sets the smoothing time constant of the 1st-order low pass filter for the analog inputs of the Terminal Board 30 (TB30).

Index: [0] = AI 0 (X482.1/X482.2)
[1] = AI 1 (X482.3/X482.4)

Note: AI: Analog input

p4053[0...1] TM31 analog inputs, smoothing time constant / TM31 AI T_smooth

TM31	**Can be changed:** U, T		**Access level:** 1
	Data type: Floating Point	**Data set:** -	**Function diagram:** 9566, 9568
	P-Group: Terminals	**Units group:** TIME_M3	**Unit selection:** -
	Min	**Max**	**Factory setting**
	0.0 [ms]	1000.0 [ms]	0.0 [ms]

Description: Sets the smoothing time constant of the 1st-order low pass filter for the analog inputs of terminal module 31 (TM31).

Index: [0] = AI 0 (X521.1/X521.2, S5.0)
[1] = AI 1 (X521.3/X521.4, S5.1)

Note: AI: Analog input

© Siemens AG, 2005. All rights reserved

p4053[0...0] TM41 analog inputs, smoothing time constant / TM41 AI T_smooth

TM41	**Can be changed:** U, T		**Access level:** 1
	Data type: Floating Point	**Data set:** -	**Function diagram:** 9566, 9568
	P-Group: Terminals	**Units group:** TIME_M3	**Unit selection:** -
	Min	**Max**	**Factory setting**
	0.0 [ms]	1000.0 [ms]	0.0 [ms]

Description: Sets the smoothing time constant of the 1st-order low pass filter for the analog inputs of terminal module 41 (TM41).
Index: [0] = AI 0 (X521.1/X521.2, S5.0)
Note: AI: Analog input

r4055[0...1] CO: TB30 analog inputs, actual value in percent / TB30 AI value in %

TB30	**Can be changed:** -		**Access level:** 1
	Data type: Floating Point	**Data set:** -	**Function diagram:** 1790, 9104
	P-Group: Terminals	**Units group:** PERCENT	**Unit selection:** -
	Min	**Max**	**Factory setting**
	- [%]	- [%]	- [%]

Description: Displays the currently referred input value of the analog inputs of Terminal Board 30 (TB30).
When interconnected, the signals are referred to the reference quantities p200x and p205x.
Index: [0] = AI 0 (X482.1/X482.2)
[1] = AI 1 (X482.3/X482.4)
Note: AI: Analog input

r4055[0...1] CO: TB31 analog inputs, actual value in percent / TM31 AI value in %

TM31	**Can be changed:** -		**Access level:** 1
	Data type: Floating Point	**Data set:** -	**Function diagram:** 1840, 9566, 9568
	P-Group: Terminals	**Units group:** PERCENT	**Unit selection:** -
	Min	**Max**	**Factory setting**
	- [%]	- [%]	- [%]

Description: Displays the currently referred input value of the analog inputs of terminal module 31 (TM31).
When interconnected, the signals are referred to the reference quantities p200x and p205x.
Index: [0] = AI 0 (X521.1/X521.2, S5.0)
[1] = AI 1 (X521.3/X521.4, S5.1)
Note: AI: Analog input

r4055[0...0] CO: TB41 analog inputs, actual value in percent / TM41 AI value in %

TM41	**Can be changed:** -		**Access level:** 1
	Data type: Floating Point	**Data set:** -	**Function diagram:** 1840, 9566, 9568
	P-Group: Terminals	**Units group:** PERCENT	**Unit selection:** -
	Min	**Max**	**Factory setting**
	- [%]	- [%]	- [%]

Description: Displays the currently referred input value of the analog inputs of terminal module 41 (TM41).
When interconnected, the signals are referred to the reference quantities p200x and p205x.
Index: [0] = AI 0 (X521.1/X521.2, S5.0)
Note: AI: Analog input

© Siemens AG, 2005. All rights reserved

r4056[0...1] TB30 analog inputs, type / TB30 AI type

TB30

Can be changed: -
Access level: 1
Data type: Integer16
Data set: -
Function diagram: -
P-Group: Terminals
Units group: -
Unit selection: -

Min	Max	Factory setting
-	-	-

Description: Displays the type of analog inputs.

Values:
4: Bipolar voltage input (-10 V ... +10 V)

Index:
[0] = AI 0 (X482.1/X482.2)
[1] = AI 1 (X482.3/X482.4)

p4056[0...1] TM31 analog inputs, type / TM31 AI type

TM31

Can be changed: U, T
Access level: 1
Data type: Integer16
Data set: -
Function diagram: 9566, 9568
P-Group: Terminals
Units group: -
Unit selection: -

Min	Max	Factory setting
0	5	4

Description: Sets the type of analog inputs of terminal module 31 (TM31).
p4056[x] = 0, 4 correspond to a voltage input (r4052, p4057, p4059 are displayed in V).
p4056[x] = 2, 3, 5 correspond to a current input (r4052, p4057, p4059 are displayed in mA).
In addition, the associated switch S5 must be switched.
For a voltage input, S5.1 or S5.2 must be switched to setting V.
For a current input, S5.1 and S5.2 must be switched into setting I (load resistor = 250 Ohm is switched-in).

Values:
0: Unipolar voltage input (0 V ... +10 V)
2: Unipolar current input (0 mA ... +20 mA)
3: Unipolar current input monitored (4 mA ... +20 mA)
4: Bipolar voltage input (-10 V ... +10 V)
5: Bipolar current input (-20 mA ... +20 mA)

Index:
[0] = AI 0 (X521.1/X521.2, S5.0)
[1] = AI 1 (X521.3/X521.4, S5.1)

Warning! The maximum voltage difference between the analog input terminals AI+, AI- and the ground of the TM31 (X520.6, X530.3) may not exceed 35 V.
For operation with the load resistor switched-in, the voltage between the differential inputs AI+ and AI- may not exceed 15 V or the impressed current of 60 mA; if this is not carefully observed, the input will be damaged.

Notice: For use as voltage input, switch S500 must be set to 0 for the input involved.
Switch S500 is located on the front panel of the TM31 above terminal block X521.

Note: When changing p4056, the parameters of the normalization characteristic (p4057, p4058, p4059, p4060) are overwritten with the following default values:
For p4056 = 0, 4, p4057 is set to 0.0 V, p4058 to 0.0 %, p4059 to 10.0 V and p4060 to 100.0 %.
For p4056 = 2, 5, p4057 is set to 0.0 mA, p4058 to 0.0 %, p4059 to 20.0 mA and p4060 to 100.0 %.
For p4056 = 3, p4057 is set to 4.0 mA, p4058 to 0.0 %, p4059 to 20.0 mA and p4060 to 100.0 %.

r4056 TM41 analog input, type / TM41 AI type

TM41

Can be changed: -
Access level: 1
Data type: Integer16
Data set: -
Function diagram: -
P-Group: Terminals
Units group: -
Unit selection: -

Min	Max	Factory setting
-	-	-

Description: Displays the type of the analog input.

Values:
4: Bipolar voltage input (-10 V ... +10 V)

© Siemens AG, 2005. All rights reserved

p4057[0...1] TB30 analog inputs, characteristic value x1 / TB30 AI char x1

TB30

Can be changed: U, T		**Access level:** 2
Data type: Floating Point	**Data set:** -	**Function diagram:** 9104
P-Group: Terminals	**Units group:** VOLTAGE_AC_PP	**Unit selection:** -
Min	**Max**	**Factory setting**
-11.000 [V]	11.000 [V]	0.000 [V]

Description: Sets the normalization characteristic for the analog inputs of Terminal Board 30 (TB30).
The normalization characteristic for the analog inputs is defined using two points.
This parameter specifies the x coordinate (input voltage in V) of the 1st value pair of the characteristic.

Index: [0] = AI 0 (X482.1/X482.2)
[1] = AI 1 (X482.3/X482.4)

Note: The parameters for the characteristic do not limit.

p4057[0...1] TM31 analog inputs, characteristic value x1 / TM31 AI char x1

TM31

Can be changed: U, T		**Access level:** 2
Data type: Floating Point	**Data set:** -	**Function diagram:** 9566, 9568
P-Group: Terminals	**Units group:** -	**Unit selection:** -
Min	**Max**	**Factory setting**
-20.000	20.000	0.000

Description: Sets the normalization characteristic for the analog inputs of terminal module 31 (TM31).
The normalization characteristic for the analog inputs is defined using two points.
This parameter specifies the x coordinate (input voltage in V or input current in mA) of the 1st value pair of the characteristic.

Index: [0] = AI 0 (X521.1/X521.2, S5.0)
[1] = AI 1 (X521.3/X521.4, S5.1)

Dependency: The units of this parameter (V or mA) depend on the analog input type.
Refer to: r4056, p4056

Notice: This parameter is automatically overwritten when the analog input type (p4056) is modified.

Note: The parameters for the characteristic do not limit.

p4057[0...0] TM41 analog input, characteristic value x1 / TM41 AI char x1

TM41

Can be changed: U, T		**Access level:** 2
Data type: Floating Point	**Data set:** -	**Function diagram:** -
P-Group: Terminals	**Units group:** -	**Unit selection:** -
Min	**Max**	**Factory setting**
-20.000	20.000	0.000

Description: Sets the normalization characteristic for the analog inputs of terminal module 41 (TM41).
The normalization characteristic for the analog input is defined using 2 points.
This parameter specifies the x coordinate (input voltage in V or input current in mA) of the 1st value pair of the characteristic.

Index: [0] = AI 0 (X521.1/X521.2, S5.0)

Note: The parameters for the characteristic do not limit.

© Siemens AG, 2005. All rights reserved

p4058[0...1] TB30 analog inputs, characteristic value y1 / TB30 AI char y1

TB30	**Can be changed:** U, T		**Access level:** 2
	Data type: Floating Point	**Data set:** -	**Function diagram:** 9104
	P-Group: Terminals	**Units group:** PERCENT	**Unit selection:** -
	Min	**Max**	**Factory setting**
	-1000.00 [%]	1000.00 [%]	0.00 [%]

Description: Sets the normalization characteristic for the analog inputs of Terminal Board 30 (TB30).
The normalization characteristic for the analog inputs is defined using two points.
This parameter specifies the y coordinate (percentage) of the 1st value pair of the characteristic.

Index: [0] = AI 0 (X482.1/X482.2)
[1] = AI 1 (X482.3/X482.4)

Note: The parameters for the characteristic do not limit.

p4058[0...1] TM31 analog inputs, characteristic value y1 / TM31 AI char y1

TM31	**Can be changed:** U, T		**Access level:** 2
	Data type: Floating Point	**Data set:** -	**Function diagram:** 9566, 9568
	P-Group: Terminals	**Units group:** PERCENT	**Unit selection:** -
	Min	**Max**	**Factory setting**
	-1000.00 [%]	1000.00 [%]	0.00 [%]

Description: Sets the normalization characteristic for the analog inputs of terminal module 31 (TM31).
The normalization characteristic for the analog inputs is defined using two points.
This parameter specifies the y coordinate (percentage) of the 1st value pair of the characteristic.

Index: [0] = AI 0 (X521.1/X521.2, S5.0)
[1] = AI 1 (X521.3/X521.4, S5.1)

Notice: This parameter is automatically overwritten when the analog input type (p4056) is modified.

Note: The parameters for the characteristic do not limit.

p4058[0...0] TM41 analog input, characteristic value y1 / TM41 AI char y1

TM41	**Can be changed:** U, T		**Access level:** 2
	Data type: Floating Point	**Data set:** -	**Function diagram:** 9566, 9568
	P-Group: Terminals	**Units group:** PERCENT	**Unit selection:** -
	Min	**Max**	**Factory setting**
	-1000.00 [%]	1000.00 [%]	0.00 [%]

Description: Sets the normalization characteristic for the analog input of terminal module 41 (TM41).
The normalization characteristic for the analog inputs is defined using two points.
This parameter specifies the y coordinate (percentage) of the 1st value pair of the characteristic.

Index: [0] = AI 0 (X521.1/X521.2, S5.0)

Note: The parameters for the characteristic do not limit.

p4059[0...1] TB30 analog inputs, characteristic value x2 / TB30 AI char x2

TB30	**Can be changed:** U, T		**Access level:** 2
	Data type: Floating Point	**Data set:** -	**Function diagram:** 9104
	P-Group: Terminals	**Units group:** VOLTAGE_AC_PP	**Unit selection:** -
	Min	**Max**	**Factory setting**
	-11.000 [V]	11.000 [V]	10.000 [V]

Description: Sets the normalization characteristic for the analog inputs of Terminal Board 30 (TB30).
The normalization characteristic for the analog inputs is defined using two points.
This parameter specifies the x coordinate (input voltage in V) of the 2nd value pair of the characteristic.

© Siemens AG, 2005. All rights reserved

Index: [0] = AI 0 (X482.1/X482.2)
[1] = AI 1 (X482.3/X482.4)

Note: The parameters for the characteristic do not limit.

p4059[0...1] TM31 analog inputs, characteristic value x2 / TM31 AI char x2

TM31

Can be changed: U, T | **Access level:** 2

Data type: Floating Point | **Data set:** - | **Function diagram:** 9566, 9568

P-Group: Terminals | **Units group:** - | **Unit selection:** -

Min	Max	Factory setting
-20.000	20.000	10.000

Description: Sets the normalization characteristic for the analog inputs of terminal module 31 (TM31).
The normalization characteristic for the analog inputs is defined using two points.
This parameter specifies the x coordinate (input voltage in V or input current in mA) of the 2nd value pair of the characteristic.

Index: [0] = AI 0 (X521.1/X521.2, S5.0)
[1] = AI 1 (X521.3/X521.4, S5.1)

Dependency: The units of this parameter (V or mA) depend on the analog input type.
Refer to: r4056, p4056

Notice: This parameter is automatically overwritten when the analog input type (p4056) is modified.

Note: The parameters for the characteristic do not limit.

p4059[0...0] TM41 analog input, characteristic value x2 / TM41 AI char x2

TM41

Can be changed: U, T | **Access level:** 2

Data type: Floating Point | **Data set:** - | **Function diagram:** 9566, 9568

P-Group: Terminals | **Units group:** - | **Unit selection:** -

Min	Max	Factory setting
-20.000	20.000	10.000

Description: Sets the normalization characteristic for the analog input of terminal module 41 (TM41).
The normalization characteristic for the analog inputs is defined using two points.
This parameter specifies the x coordinate (input voltage in V or input current in mA) of the 2nd value pair of the characteristic.

Index: [0] = AI 0 (X521.1/X521.2, S5.0)

Note: The parameters for the characteristic do not limit.

p4060[0...1] TB30 analog inputs, characteristic value y2 / TB30 AI char y2

TB30

Can be changed: U, T | **Access level:** 2

Data type: Floating Point | **Data set:** - | **Function diagram:** 9104

P-Group: Terminals | **Units group:** PERCENT | **Unit selection:** -

Min	Max	Factory setting
-1000.00 [%]	1000.00 [%]	100.00 [%]

Description: Sets the normalization characteristic for the analog inputs of Terminal Board 30 (TB30).
The normalization characteristic for the analog inputs is defined using two points.
This parameter specifies the y coordinate (percentage) of the 2nd value pair of the characteristic.

Index: [0] = AI 0 (X482.1/X482.2)
[1] = AI 1 (X482.3/X482.4)

Note: The parameters for the characteristic do not limit.

© Siemens AG, 2005. All rights reserved

p4060[0...1] TM31 analog inputs, characteristic value y2 / TM31 AI char y2

TM31	**Can be changed:** U, T		**Access level:** 2
	Data type: Floating Point	**Data set:** -	**Function diagram:** 9566, 9568
	P-Group: Terminals	**Units group:** PERCENT	**Unit selection:** -
	Min	**Max**	**Factory setting**
	-1000.00 [%]	1000.00 [%]	100.00 [%]

Description: Sets the normalization characteristic for the analog inputs of terminal module 31 (TM31).
The normalization characteristic for the analog inputs is defined using two points.
This parameter specifies the y coordinate (percentage) of the 2nd value pair of the characteristic.

Index: [0] = AI 0 (X521.1/X521.2, S5.0)
[1] = AI 1 (X521.3/X521.4, S5.1)

Notice: This parameter is automatically overwritten when the analog input type (p4056) is modified.

Note: The parameters for the characteristic do not limit.

p4060[0...0] TM41 analog input, characteristic value y2 / TM41 AI char y2

TM41	**Can be changed:** U, T		**Access level:** 2
	Data type: Floating Point	**Data set:** -	**Function diagram:** 9566, 9568
	P-Group: Terminals	**Units group:** PERCENT	**Unit selection:** -
	Min	**Max**	**Factory setting**
	-1000.00 [%]	1000.00 [%]	100.00 [%]

Description: Sets the normalization characteristic for the analog input of terminal module 41 (TM41).
The normalization characteristic for the analog inputs is defined using two points.
This parameter specifies the y coordinate (percentage) of the 2nd value pair of the characteristic.

Index: [0] = AI 0 (X521.1/X521.2, S5.0)

Note: The parameters for the characteristic do not limit.

p4061[0...1] TM31 analog inputs, wire breakage monitoring response threshold / TM31 WireBrkThresh

TM31	**Can be changed:** U, T		**Access level:** 2
	Data type: Floating Point	**Data set:** -	**Function diagram:** 9566, 9568
	P-Group: Terminals	**Units group:** CURRENT_DC_M3	**Unit selection:** -
	Min	**Max**	**Factory setting**
	0.00 [mA]	20.00 [mA]	2.00 [mA]

Description: Sets the response threshold for wire-breakage monitoring of the analog inputs of terminal module 31 (TM31).

Index: [0] = AI 0 (X521.1/X521.2, S5.0)
[1] = AI 1 (X521.3/X521.4, S5.1)

Dependency: Wire-breakage monitoring is active for the following type of analog input: p4056[x] = 3 (unipolar current input monitors 4 mA ... 20 mA).
Refer to: r4056, p4056

© Siemens AG, 2005. All rights reserved

p4062[0...1] TM31 analog inputs, wire breakage monitoring, delay time / TM31 wirebrk t_del

TM31	**Can be changed:** U, T		**Access level:** 2
	Data type: Unsigned16	**Data set:** -	**Function diagram:** 9566, 9568
	P-Group: Terminals	**Units group:** TIME_M3	**Unit selection:** -
	Min	**Max**	**Factory setting**
	0 [ms]	1000 [ms]	100 [ms]

Description: Sets the delay time for wire-breakage monitoring of the analog inputs on terminal module 31 (TM31).

Index: [0] = AI 0 (X521.1/X521.2, S5.0)
[1] = AI 1 (X521.3/X521.4, S5.1)

p4063[0...1] TB30 analog inputs offset / TB30 AI offset

TB30	**Can be changed:** U, T		**Access level:** 2
	Data type: Floating Point	**Data set:** -	**Function diagram:** 9104
	P-Group: Terminals	**Units group:** VOLTAGE_DC	**Unit selection:** -
	Min	**Max**	**Factory setting**
	-20.000 [V]	20.000 [V]	0.000 [V]

Description: Sets the offset for the analog inputs of Terminal Board 30 (TB30).
The offset is added to the input signal before the normalization characteristic.

Index: [0] = AI 0 (X482.1/X482.2)
[1] = AI 1 (X482.3/X482.4)

p4063[0...1] TM31 analog inputs offset / TM31 AI offset

TM31	**Can be changed:** U, T		**Access level:** 2
	Data type: Floating Point	**Data set:** -	**Function diagram:** 9566, 9568
	P-Group: Terminals	**Units group:** -	**Unit selection:** -
	Min	**Max**	**Factory setting**
	-20.000	20.000	0.000

Description: Sets the offset for the analog inputs of terminal module 31 (TM31).
The offset is added to the input signal before the normalization characteristic.

Index: [0] = AI 0 (X521.1/X521.2, S5.0)
[1] = AI 1 (X521.3/X521.4, S5.1)

p4063[0...0] TM41 analog input, offset / TM41 AI offset

TM41	**Can be changed:** U, T		**Access level:** 2
	Data type: Floating Point	**Data set:** -	**Function diagram:** 9566, 9568
	P-Group: Terminals	**Units group:** -	**Unit selection:** -
	Min	**Max**	**Factory setting**
	-20.000	20.000	0.000

Description: Sets the offset for the analog input of terminal module 41 (TM41).
The offset is added to the input signal before the normalization characteristic.

Index: [0] = AI 0 (X521.1/X521.2, S5.0)

© Siemens AG, 2005. All rights reserved

p4066[0...1] TB30 analog inputs, activate absolute value generation / TB30 AI absVal act

TB30	**Can be changed:** U, T		**Access level:** 3
	Data type: Integer16	**Data set:** -	**Function diagram:** 9104
	P-Group: Terminals	**Units group:** -	**Unit selection:** -
	Min	**Max**	**Factory setting**
	0	1	0

Description: Activates the absolute value generation for the analog input signals of the Terminal Board 30 (TB30).

Values:
0: No absolute value generation
1: Absolute value generation switched-in

Index:
[0] = AI 0 (X482.1/X482.2)
[1] = AI 1 (X482.3/X482.4)

p4066[0...1] TM31 analog inputs, activate absolute value generation / TM31 AI absVal act

TM31	**Can be changed:** U, T		**Access level:** 3
	Data type: Integer16	**Data set:** -	**Function diagram:** 9566, 9568
	P-Group: Terminals	**Units group:** -	**Unit selection:** -
	Min	**Max**	**Factory setting**
	0	1	0

Description: Activates the absolute value generation for the analog input signals of terminal module 31 (TM31).

Values:
0: No absolute value generation
1: Absolute value generation switched-in

Index:
[0] = AI 0 (X521.1/X521.2, S5.0)
[1] = AI 1 (X521.3/X521.4, S5.1)

p4066[0...0] TM41 analog input, activate absolute value generation / TM41 AI absVal act

TM41	**Can be changed:** U, T		**Access level:** 3
	Data type: Integer16	**Data set:** -	**Function diagram:** 9566, 9568
	P-Group: Terminals	**Units group:** -	**Unit selection:** -
	Min	**Max**	**Factory setting**
	0	1	0

Description: Activates the absolute value generation of the analog input signal of terminal module 41 (TM41).

Values:
0: No absolute value generation
1: Absolute value generation switched-in

Index:
[0] = AI 0 (X521.1/X521.2, S5.0)

p4067[0...1] BI: TB30 analog inputs, signal source for inversion / TB30 AI invert

TB30	**Can be changed:** U, T		**Access level:** 3
	Data type: Unsigned32	**Data set:** -	**Function diagram:** 9104
	P-Group: Terminals	**Units group:** -	**Unit selection:** -
	Min	**Max**	**Factory setting**
	-	-	0

Description: Sets the signal source to invert the analog input signals of the Terminal Board 30 (TB30).

Index:
[0] = AI 0 (X482.1/X482.2)
[1] = AI 1 (X482.3/X482.4)

© Siemens AG, 2005. All rights reserved

p4067[0...1] BI: TM31 analog inputs, signal source for inversion / TM31 AI invert

TM31	**Can be changed:** U, T		**Access level:** 3
	Data type: Unsigned32	**Data set:** -	**Function diagram:** 9566, 9568
	P-Group: Terminals	**Units group:** -	**Unit selection:** -
	Min	**Max**	**Factory setting**
	-	-	0

Description: Sets the signal source to invert the analog inputs signals of terminal module 31 (TM31).

Index: [0] = AI 0 (X521.1/X521.2, S5.0)
[1] = AI 1 (X521.3/X521.4, S5.1)

p4067[0...0] BI: TM41 analog input, signal source for inversion / TM41 AI invert

TM41	**Can be changed:** U, T		**Access level:** 3
	Data type: Unsigned32	**Data set:** -	**Function diagram:** 9566, 9568
	P-Group: Terminals	**Units group:** -	**Unit selection:** -
	Min	**Max**	**Factory setting**
	-	-	0

Description: Sets the signal source to invert the analog input signal of terminal module 41 (TM41).

Index: [0] = AI 0 (X521.1/X521.2, S5.0)

p4068[0...1] TB30 analog inputs, window to suppress noise / TB30 AI window

TB30	**Can be changed:** U, T		**Access level:** 3
	Data type: Floating Point	**Data set:** -	**Function diagram:** 9104
	P-Group: Terminals	**Units group:** PERCENT	**Unit selection:** -
	Min	**Max**	**Factory setting**
	0.00 [%]	20.00 [%]	0.00 [%]

Description: Sets the noise suppression window for the analog inputs of Terminal Board 30 (TB30).
Changes less than the window are suppressed.

Index: [0] = AI 0 (X482.1/X482.2)
[1] = AI 1 (X482.3/X482.4)

p4068[0...1] TM31 analog inputs, window to suppress noise / TM31 AI window

TM31	**Can be changed:** U, T		**Access level:** 3
	Data type: Floating Point	**Data set:** -	**Function diagram:** 9566, 9568
	P-Group: Terminals	**Units group:** PERCENT	**Unit selection:** -
	Min	**Max**	**Factory setting**
	0.00 [%]	20.00 [%]	0.00 [%]

Description: Sets the window for noise suppression for the analog inputs of terminal module 31 (TM31).
Changes less than the window are suppressed.

Index: [0] = AI 0 (X521.1/X521.2, S5.0)
[1] = AI 1 (X521.3/X521.4, S5.1)

© Siemens AG, 2005. All rights reserved

p4068[0...0] TM41 analog input, window to suppress noise / TM41 AI window

TM41	**Can be changed:** U, T		**Access level:** 3
	Data type: Floating Point	**Data set:** -	**Function diagram:** 9566, 9568
	P-Group: Terminals	**Units group:** PERCENT	**Unit selection:** -
	Min	**Max**	**Factory setting**
	0.00 [%]	20.00 [%]	0.00 [%]

Description: Sets the noise suppression window for the analog input of terminal module 41 (TM41).
Changes less than the window are suppressed.

Index: [0] = AI 0 (X521.1/X521.2, S5.0)

p4069[0...1] BI: TB30 analog inputs, signal source for enable / TB30 AI enable

TB30	**Can be changed:** U, T		**Access level:** 3
	Data type: Unsigned32	**Data set:** -	**Function diagram:** 9104
	P-Group: Terminals	**Units group:** -	**Unit selection:** -
	Min	**Max**	**Factory setting**
	-	-	1

Description: Sets the signal source for enabling the analog inputs of the Terminal Board 30 (TB30).

Index: [0] = AI 0 (X482.1/X482.2)
[1] = AI 1 (X482.3/X482.4)

p4069[0...1] BI: TM31 analog inputs, signal source for enable / TM31 AI enable

TM31	**Can be changed:** U, T		**Access level:** 3
	Data type: Unsigned32	**Data set:** -	**Function diagram:** 9566, 9568
	P-Group: Terminals	**Units group:** -	**Unit selection:** -
	Min	**Max**	**Factory setting**
	-	-	1

Description: Sets the signal source for the enable signal of the analog inputs of terminal module 31 (TM31).

Index: [0] = AI 0 (X521.1/X521.2, S5.0)
[1] = AI 1 (X521.3/X521.4, S5.1)

p4069[0...0] BI: TM41 analog input, signal source for enable / TM41 AI enable

TM41	**Can be changed:** U, T		**Access level:** 3
	Data type: Unsigned32	**Data set:** -	**Function diagram:** 9566, 9568
	P-Group: Terminals	**Units group:** -	**Unit selection:** -
	Min	**Max**	**Factory setting**
	-	-	1

Description: Sets the signal source for the enable signal of the analog input of terminal module 41 (TM41).

Index: [0] = AI 0 (X521.1/X521.2, S5.0)

© Siemens AG, 2005. All rights reserved

p4071[0...1] CI: TB30 analog outputs, signal source / TB30 AO sig_source

TB30	**Can be changed:** U, T		**Access level:** 1
	Data type: Unsigned32	**Data set:** -	**Function diagram:** 1790, 9106
	P-Group: Terminals	**Units group:** -	**Unit selection:** -
	Min	**Max**	**Factory setting**
	-	-	0

Description: Sets the signal source for the analog outputs of the Terminal Board 30 (TB30).

Index: [0] = AO 0 (X482.5/X482.6)
[1] = AO 1 (X482.7/X482.8)

Note: AO: Analog output

p4071[0...1] CI: TM31 analog outputs, signal source / TM31 AO sig_source

TM31	**Can be changed:** U, T		**Access level:** 1
	Data type: Unsigned32	**Data set:** -	**Function diagram:** 1840, 9572
	P-Group: Terminals	**Units group:** -	**Unit selection:** -
	Min	**Max**	**Factory setting**
	-	-	0

Description: Sets the signal source for the analog outputs of terminal module 31 (TM31).

Index: [0] = AO 0 (X522.1, X522.2, X522.3)
[1] = AO 1 (X522.4, X522.5, X522.6)

Note: AO: Analog output

r4072[0...1] TB30 analog outputs, output value actually referred / TB30 AO output_val

TB30	**Can be changed:** -		**Access level:** 1
	Data type: Floating Point	**Data set:** -	**Function diagram:** 9106
	P-Group: Terminals	**Units group:** PERCENT	**Unit selection:** -
	Min	**Max**	**Factory setting**
	- [%]	- [%]	- [%]

Description: Displays the actual referred output value of the analog outputs of the Terminal Board 30 (TB30).

Index: [0] = AO 0 (X482.5/X482.6)
[1] = AO 1 (X482.7/X482.8)

r4072[0...1] TM31 analog outputs, output value actually referred / TM31 AO output_val

TM31	**Can be changed:** -		**Access level:** 1
	Data type: Floating Point	**Data set:** -	**Function diagram:** 9572
	P-Group: Terminals	**Units group:** PERCENT	**Unit selection:** -
	Min	**Max**	**Factory setting**
	- [%]	- [%]	- [%]

Description: Displays the actual referred output value of the analog outputs of terminal module 31 (TM31).

Index: [0] = AO 0 (X522.1, X522.2, X522.3)
[1] = AO 1 (X522.4, X522.5, X522.6)

© Siemens AG, 2005. All rights reserved

p4073[0...1] TB30 analog outputs, smoothing time constant / TB30 AO T_smooth

TB30	**Can be changed:** U, T		**Access level:** 1
	Data type: Floating Point	**Data set:** -	**Function diagram:** 9106
	P-Group: Terminals	**Units group:** TIME_M3	**Unit selection:** -
	Min	**Max**	**Factory setting**
	0.0 [ms]	1000.0 [ms]	0.0 [ms]

Description: Sets the smoothing time constant of the 1st order low pass filter for the analog outputs of the Terminal Board 30 (TB30).

Index: [0] = AO 0 (X482.5/X482.6)
[1] = AO 1 (X482.7/X482.8)

p4073[0...1] TM31 analog outputs, smoothing time constant / TM31 AO T_smooth

TM31	**Can be changed:** U, T		**Access level:** 1
	Data type: Floating Point	**Data set:** -	**Function diagram:** 9572
	P-Group: Terminals	**Units group:** TIME_M3	**Unit selection:** -
	Min	**Max**	**Factory setting**
	0.0 [ms]	1000.0 [ms]	0.0 [ms]

Description: Sets the smoothing time constant of the 1st-order low pass filter for the analog outputs of terminal module 31 (TM31).

Index: [0] = AO 0 (X522.1, X522.2, X522.3)
[1] = AO 1 (X522.4, X522.5, X522.6)

r4074[0...1] TB30 analog outputs, actual output voltage / TB30 AO U_smooth

TB30	**Can be changed:** -		**Access level:** 1
	Data type: Floating Point	**Data set:** -	**Function diagram:** 9106
	P-Group: Terminals	**Units group:** VOLTAGE_AC_PP	**Unit selection:** -
	Min	**Max**	**Factory setting**
	- [V]	- [V]	- [V]

Description: Displays the actual output voltage at the analog outputs of the Terminal Board 30 (TB30).

Index: [0] = AO 0 (X482.5/X482.6)
[1] = AO 1 (X482.7/X482.8)

r4074[0...1] TM31 analog outputs, actual output voltage/current / TM31 AO U/I_output

TM31	**Can be changed:** -		**Access level:** 1
	Data type: Floating Point	**Data set:** -	**Function diagram:** 9572
	P-Group: Terminals	**Units group:** -	**Unit selection:** -
	Min	**Max**	**Factory setting**
	-	-	-

Description: Displays the actual output voltage in V when set as voltage output.
Displays the actual output voltage in mA when set as current output.

Index: [0] = AO 0 (X522.1, X522.2, X522.3)
[1] = AO 1 (X522.4, X522.5, X522.6)

Dependency: The type of the analog output AO x (voltage or current output) is set using p4076.
Refer to: r4076, p4076

Note: AO: Analog output

© Siemens AG, 2005. All rights reserved

p4075[0...1] TB30 analog outputs, activate absolute value generation / TB30 AO absVal act

TB30

Can be changed: T | **Access level:** 3
Data type: Integer16 | **Data set:** - | **Function diagram:** 9106
P-Group: Terminals | **Units group:** - | **Unit selection:** -

Min	Max	Factory setting
0	1	0

Description: Activates the absolute value generation for the analog outputs of the Terminal Board 30 (TB30).

Values:
0: No absolute value generation
1: Absolute value generation switched-in

Index:
[0] = AO 0 (X482.5/X482.6)
[1] = AO 1 (X482.7/X482.8)

p4075[0...1] TM31 analog outputs, activate absolute value generation / TM31 AO absVal act

TM31

Can be changed: T | **Access level:** 3
Data type: Integer16 | **Data set:** - | **Function diagram:** 9572
P-Group: Terminals | **Units group:** - | **Unit selection:** -

Min	Max	Factory setting
0	1	0

Description: Activates the absolute value generation for the analog outputs of terminal module 31 (TM31).

Values:
0: No absolute value generation
1: Absolute value generation switched-in

Index:
[0] = AO 0 (X522.1, X522.2, X522.3)
[1] = AO 1 (X522.4, X522.5, X522.6)

r4076[0...1] TB30 analog outputs, type / TB30 AO type

TB30

Can be changed: - | **Access level:** 1
Data type: Integer16 | **Data set:** - | **Function diagram:** -
P-Group: Terminals | **Units group:** - | **Unit selection:** -

Min	Max	Factory setting
-	-	-

Description: Displays the type of analog outputs of the Terminal Board 30 (TB30).

Values:
4: Voltage output (-10 V ... +10 V)

Index:
[0] = AO 0 (X482.5/X482.6)
[1] = AO 1 (X482.7/X482.8)

p4076[0...1] TM31 analog outputs, type / TM31 AO type

TM31

Can be changed: U, T | **Access level:** 1
Data type: Integer16 | **Data set:** - | **Function diagram:** 9572
P-Group: Terminals | **Units group:** - | **Unit selection:** -

Min	Max	Factory setting
0	4	4

Description: Sets the type of analog outputs of terminal module 31 (TM31).
p4076[x] = 1, 4 correspond to a voltage output (p4074, p4078, p4080, p4083 are displayed in V).
p4076[x] = 0, 2, 3 correspond to a current output (p4074, p4078, p4080, p4083 are displayed in mA).

Values:
0: Current output (0 mA ... +20 mA)
1: Voltage output (0 V ... +10 V)
2: Current output (4 mA ... +20 mA)
3: Current output (-20 mA ... +20 mA)
4: Voltage output (-10 V ... +10 V)

Index:
[0] = AO 0 (X522.1, X522.2, X522.3)
[1] = AO 1 (X522.4, X522.5, X522.6)

Dependency: Refer to: p4077, p4078, p4079, p4080

© Siemens AG, 2005. All rights reserved

Note: When changing p4076, the parameters of the normalization characteristic (p4077, p4078, p4079, p4080) are overwritten with the following default values:
For p4076 = 0, 3, p4077 is set to 0.0 %, p4078 to 0.0 mA, p4079 to 100.0 % and p4080 to 20.0 mA.
For p4076 = 1, 4, p4077 is set to 0.0 %, p4078 to 0.0 V, p4079 to 100.0 % and p4080 to 10.0 V.
For p4076 = 2, p4077 is set to 0.0 %, p4078 to 4.0 mA, p4079 to 100.0 % and p4080 to 20.0 mA.

p4077[0...1] TB30 analog outputs, characteristic value x1 / TB30 AO char x1

TB30	**Can be changed:** U, T		**Access level:** 2
	Data type: Floating Point	**Data set:** -	**Function diagram:** 9106
	P-Group: Terminals	**Units group:** PERCENT	**Unit selection:** -
	Min	**Max**	**Factory setting**
	-1000.00 [%]	1000.00 [%]	0.00 [%]

Description: Sets the normalization characteristic for the analog outputs of Terminal Board 30 (TB30).
The normalization characteristic for the analog outputs is defined using 2 points.
This parameter specifies the x coordinate (percentage) of the 1st value pair of the characteristic.

Index: [0] = AO 0 (X482.5/X482.6)
[1] = AO 1 (X482.7/X482.8)

Note: The parameters for the characteristic do not limit.

p4077[0...1] TM31 analog outputs, characteristic value x1 / TM31 AO char x1

TM31	**Can be changed:** U, T		**Access level:** 2
	Data type: Floating Point	**Data set:** -	**Function diagram:** 9572
	P-Group: Terminals	**Units group:** PERCENT	**Unit selection:** -
	Min	**Max**	**Factory setting**
	-1000.00 [%]	1000.00 [%]	0.00 [%]

Description: Sets the normalization characteristic for the analog outputs of terminal module 31 (TM31).
The normalization characteristic for the analog outputs is defined using 2 points.
This parameter specifies the x coordinate (percentage) of the 1st value pair of the characteristic.

Index: [0] = AO 0 (X522.1, X522.2, X522.3)
[1] = AO 1 (X522.4, X522.5, X522.6)

Dependency: The units of this parameter (V or mA) depend on the analog input type.
Refer to: r4076, p4076

Notice: This parameter is automatically overwritten when the analog output type is changed (p4076).

Note: This parameter is automatically overwritten if p4076 (type of analog output) is changed.
The parameters for the characteristic do not limit.

p4078[0...1] TB30 analog outputs, characteristic value y1 / TB30 AO char y1

TB30	**Can be changed:** U, T		**Access level:** 2
	Data type: Floating Point	**Data set:** -	**Function diagram:** 9106
	P-Group: Terminals	**Units group:** VOLTAGE_AC_PP	**Unit selection:** -
	Min	**Max**	**Factory setting**
	-11.000 [V]	11.000 [V]	0.000 [V]

Description: Sets the normalization characteristic for the analog outputs of Terminal Board 30 (TB30).
The normalization characteristic for the analog outputs is defined using 2 points.
This parameter specifies the y coordinate (output voltage in V) of the 1st value pair of the characteristic.

Index: [0] = AO 0 (X482.5/X482.6)
[1] = AO 1 (X482.7/X482.8)

Note: The parameters for the characteristic do not limit.

© Siemens AG, 2005. All rights reserved

p4078[0...1] TM31 analog outputs, characteristic value y1 / TM31 AO char y1

TM31	**Can be changed:** U, T		**Access level:** 2
	Data type: Floating Point	**Data set:** -	**Function diagram:** 9572
	P-Group: Terminals	**Units group:** VOLTAGE_AC_PP	**Unit selection:** -
	Min	**Max**	**Factory setting**
	-20.000 [V]	20.000 [V]	0.000 [V]

Description: Sets the normalization characteristic for the analog outputs of terminal module 31 (TM31).
The normalization characteristic for the analog outputs is defined using 2 points.
This parameter specifies the y coordinate (output voltage in V or output current in mA) of the 1st value pair of the characteristic.

Index: [0] = AO 0 (X522.1, X522.2, X522.3)
[1] = AO 1 (X522.4, X522.5, X522.6)

Dependency: The units of this parameter (V or mA) depend on the analog input type.
Refer to: r4076, p4076

Notice: This parameter is automatically overwritten when the analog output type is changed (p4076).

Note: This parameter is automatically overwritten if p4076 (type of analog output) is changed.
The parameters for the characteristic do not limit.

p4079[0...1] TB30 analog outputs, characteristic value x2 / TB30 AO char x2

TB30	**Can be changed:** U, T		**Access level:** 2
	Data type: Floating Point	**Data set:** -	**Function diagram:** 9106
	P-Group: Terminals	**Units group:** PERCENT	**Unit selection:** -
	Min	**Max**	**Factory setting**
	-1000.00 [%]	1000.00 [%]	100.00 [%]

Description: Sets the normalization characteristic for the analog outputs of Terminal Board 30 (TB30).
The normalization characteristic for the analog outputs is defined using 2 points.
This parameter specifies the x coordinate (percentage) of the 2nd value pair of the characteristic.

Index: [0] = AO 0 (X482.5/X482.6)
[1] = AO 1 (X482.7/X482.8)

Note: The parameters for the characteristic do not limit.

p4079[0...1] TM31 analog outputs, characteristic value x2 / TM31 AO char x2

TM31	**Can be changed:** U, T		**Access level:** 2
	Data type: Floating Point	**Data set:** -	**Function diagram:** 9572
	P-Group: Terminals	**Units group:** PERCENT	**Unit selection:** -
	Min	**Max**	**Factory setting**
	-1000.00 [%]	1000.00 [%]	100.00 [%]

Description: Sets the normalization characteristic for the analog outputs of terminal module 31 (TM31).
The normalization characteristic for the analog outputs is defined using 2 points.
This parameter specifies the x coordinate (percentage) of the 2nd value pair of the characteristic.

Index: [0] = AO 0 (X522.1, X522.2, X522.3)
[1] = AO 1 (X522.4, X522.5, X522.6)

Dependency: Refer to: r4076, p4076

Notice: This parameter is automatically overwritten when the analog output type is changed (p4076).

Note: This parameter is overwritten if p4076 (type of analog output) is changed.
The parameters for the characteristic do not limit.

© Siemens AG, 2005. All rights reserved

p4080[0...1] TB30 analog outputs, characteristic value y2 / TB30 AO char y2

TB30	**Can be changed:** U, T		**Access level:** 2
	Data type: Floating Point	**Data set:** -	**Function diagram:** 9106
	P-Group: Terminals	**Units group:** VOLTAGE_AC_PP	**Unit selection:** -
	Min	**Max**	**Factory setting**
	-11.000 [V]	11.000 [V]	10.000 [V]

Description: Sets the normalization characteristic for the analog outputs of Terminal Board 30 (TB30).
The normalization characteristic for the analog outputs is defined using 2 points.
This parameter specifies the y coordinate (output voltage in V) of the 2nd value pair of the characteristic.

Index: [0] = AO 0 (X482.5/X482.6)
[1] = AO 1 (X482.7/X482.8)

Note: The parameters for the characteristic do not limit.

p4080[0...1] TM31 analog outputs, characteristic value y2 / TM31 AO char y2

TM31	**Can be changed:** U, T		**Access level:** 2
	Data type: Floating Point	**Data set:** -	**Function diagram:** 9572
	P-Group: Terminals	**Units group:** VOLTAGE_AC_PP	**Unit selection:** -
	Min	**Max**	**Factory setting**
	-20.000 [V]	20.000 [V]	10.000 [V]

Description: Sets the normalization characteristic for the analog outputs of terminal module 31 (TM31).
The normalization characteristic for the analog outputs is defined using 2 points.
This parameter specifies the y coordinate (output voltage in V or output current in mA) of the 2nd value pair of the characteristic.

Index: [0] = AO 0 (X522.1, X522.2, X522.3)
[1] = AO 1 (X522.4, X522.5, X522.6)

Dependency: The units of this parameter (V or mA) depend on the analog input type.
Refer to: r4076, p4076

Notice: This parameter is automatically overwritten when the analog output type is changed (p4076).

Note: This parameter is overwritten if p4076 (type of analog output) is changed.
The parameters for the characteristic do not limit.

p4082[0...1] BI: TB30 analog outputs, signal source for inversion / TB30 AO invert

TB30	**Can be changed:** U, T		**Access level:** 3
	Data type: Unsigned32	**Data set:** -	**Function diagram:** 9106
	P-Group: Terminals	**Units group:** -	**Unit selection:** -
	Min	**Max**	**Factory setting**
	-	-	0

Description: Sets the signal source for inverting the analog output signals of the Terminal Board 30 (TB30).

Index: [0] = AO 0 (X482.5/X482.6)
[1] = AO 1 (X482.7/X482.8)

p4082[0...1] BI: TM31 analog outputs, signal source for inversion / TM31 AO invert

TM31	**Can be changed:** U, T		**Access level:** 3
	Data type: Unsigned32	**Data set:** -	**Function diagram:** 9572
	P-Group: Terminals	**Units group:** -	**Unit selection:** -
	Min	**Max**	**Factory setting**
	-	-	0

Description: Sets the signal source to invert the analog output signals of terminal module 31 (TM31).

Index: [0] = AO 0 (X522.1, X522.2, X522.3)
[1] = AO 1 (X522.4, X522.5, X522.6)

© Siemens AG, 2005. All rights reserved

p4083[0...1] TB30 analog outputs, offset / TB30 AO offset

TB30	**Can be changed:** U, T		**Access level:** 1
	Data type: Floating Point	**Data set:** -	**Function diagram:** 9106
	P-Group: Terminals	**Units group:** -	**Unit selection:** -
	Min	**Max**	**Factory setting**
	-10.000	10.000	0.000

Description: Sets the offset for the analog outputs of Terminal Board 30 (TB30).
The offset is added to the output signal after the normalization characteristic.

Index: [0] = AO 0 (X482.5/X482.6)
[1] = AO 1 (X482.7/X482.8)

p4083[0...1] TM31 analog outputs, offset / TM31 AO offset

TM31	**Can be changed:** U, T		**Access level:** 1
	Data type: Floating Point	**Data set:** -	**Function diagram:** 9572
	P-Group: Terminals	**Units group:** -	**Unit selection:** -
	Min	**Max**	**Factory setting**
	-20.000	20.000	0.000

Description: Sets the offset for the analog outputs of terminal module 31 (TM31).
The offset is added to the output signal after the normalization characteristic.

Index: [0] = AO 0 (X522.1, X522.2, X522.3)
[1] = AO 1 (X522.4, X522.5, X522.6)

Dependency: The units of this parameter (V or mA) depend on the analog input type.
Refer to: r4076, p4076

Note: This means, for example, the offset of a downstream isolating amplifier can be compensated.

p4086 BI: TM15DI/DO signal source for terminal DI/DO 16 / TM15D S_srcDI/DO16

TM15DI/DO	**Can be changed:** U, T		**Access level:** 1
	Data type: Unsigned32	**Data set:** -	**Function diagram:** 9402
	P-Group: Commands	**Units group:** -	**Unit selection:** -
	Min	**Max**	**Factory setting**
	-	-	0

Description: Sets the signal source for terminal DI/DO 16 (X522.2) of terminal module 15 (TM15).

Note: Prerequisite: The DI/DO must be set as an output (p4028.16 = 1).
DI/DO: Bidirectional Digital Input/Output

p4087 BI: TM15DI/DO signal source for terminal DI/DO 17 / TM15D S_srcDI/DO17

TM15DI/DO	**Can be changed:** U, T		**Access level:** 1
	Data type: Unsigned32	**Data set:** -	**Function diagram:** 9402
	P-Group: Commands	**Units group:** -	**Unit selection:** -
	Min	**Max**	**Factory setting**
	-	-	0

Description: Sets the signal source for terminal DI/DO 17 (X522.3) of terminal module 15 (TM15).

Note: Prerequisite: The DI/DO must be set as an output (p4028.17 = 1).
DI/DO: Bidirectional Digital Input/Output

© Siemens AG, 2005. All rights reserved

p4088 BI: TM15DI/DO signal source for terminal DI/DO 18 / TM15D S_srcDI/DO18

TM15DI/DO	**Can be changed:** U, T		**Access level:** 1
	Data type: Unsigned32	**Data set:** -	**Function diagram:** 9402
	P-Group: Commands	**Units group:** -	**Unit selection:** -
	Min	**Max**	**Factory setting**
	-	-	0

Description: Sets the signal source for terminal DI/DO 18 (X522.4) of terminal module 15 (TM15).
Note: Prerequisite: The DI/DO must be set as an output (p4028.18 = 1).
DI/DO: Bidirectional Digital Input/Output

p4089 BI: TM15DI/DO signal source for terminal DI/DO 19 / TM15D S_srcDI/DO19

TM15DI/DO	**Can be changed:** U, T		**Access level:** 1
	Data type: Unsigned32	**Data set:** -	**Function diagram:** 9402
	P-Group: Commands	**Units group:** -	**Unit selection:** -
	Min	**Max**	**Factory setting**
	-	-	0

Description: Sets the signal source for terminal DI/DO 19 (X522.5) of terminal module 15 (TM15).
Note: Prerequisite: The DI/DO must be set as an output (p4028.19 = 1).
DI/DO: Bidirectional Digital Input/Output

p4090 BI: TM15DI/DO signal source for terminal DI/DO 20 / TM15D S_srcDI/DO20

TM15DI/DO	**Can be changed:** U, T		**Access level:** 1
	Data type: Unsigned32	**Data set:** -	**Function diagram:** 9402
	P-Group: Commands	**Units group:** -	**Unit selection:** -
	Min	**Max**	**Factory setting**
	-	-	0

Description: Sets the signal source for terminal DI/DO 20 (X522.6) of terminal module 15 (TM15).
Note: Prerequisite: The DI/DO must be set as an output (p4028.20 = 1).
DI/DO: Bidirectional Digital Input/Output

p4091 BI: TM15DI/DO signal source for terminal DI/DO 21 / TM15D S_srcDI/DO21

TM15DI/DO	**Can be changed:** U, T		**Access level:** 1
	Data type: Unsigned32	**Data set:** -	**Function diagram:** 9402
	P-Group: Commands	**Units group:** -	**Unit selection:** -
	Min	**Max**	**Factory setting**
	-	-	0

Description: Sets the signal source for terminal DI/DO 21 (X522.7) of terminal module 15 (TM15).
Note: Prerequisite: The DI/DO must be set as an output (p4028.21 = 1).
DI/DO: Bidirectional Digital Input/Output

p4092 BI: TM15DI/DO signal source for terminal DI/DO 22 / TM15D S_srcDI/DO22

TM15DI/DO	**Can be changed:** U, T		**Access level:** 1
	Data type: Unsigned32	**Data set:** -	**Function diagram:** 9402
	P-Group: Commands	**Units group:** -	**Unit selection:** -
	Min	**Max**	**Factory setting**
	-	-	0

Description: Sets the signal source for terminal DI/DO 22 (X522.8) of terminal module 15 (TM15).
Note: Prerequisite: The DI/DO must be set as an output (p4028.22 = 1).
DI/DO: Bidirectional Digital Input/Output

© Siemens AG, 2005. All rights reserved

p4093 BI: TM15DI/DO signal source for terminal DI/DO 23 / TM15D S_srcDI/DO23

TM15DI/DO

Can be changed: U, T | **Access level:** 1
Data type: Unsigned32 | **Data set:** - | **Function diagram:** 9402
P-Group: Commands | **Units group:** - | **Unit selection:** -

Min	Max	Factory setting
-	-	0

Description: Sets the signal source for terminal DI/DO 23 (X522.9) of terminal module 15 (TM15).

Note: Prerequisite: The DI/DO must be set as an output (p4028.23 = 1).
DI/DO: Bidirectional Digital Input/Output

p4095 TB30 digital inputs, simulation mode / TB30 DI sim_mode

TB30

Can be changed: U, T | **Access level:** 2
Data type: Unsigned32 | **Data set:** - | **Function diagram:** 1790, 9100
P-Group: Commands | **Units group:** - | **Unit selection:** -

Min	Max	Factory setting
0000 bin	1111 bin	0000 bin

Description: Sets the simulation mode for the digital inputs of the Terminal Board 30 (TB30).

Bit field:

Bit	Signal name	0 signal	1 signal	FP
00	DI 0 (X481.1)	Terminal eval.	Simulation	-
01	DI 1 (X481.2)	Terminal eval.	Simulation	-
02	DI 2 (X481.3)	Terminal eval.	Simulation	-
03	DI 3 (X481.4)	Terminal eval.	Simulation	-

Dependency: The setpoint for the input signals is specified using p4096.
Refer to: p4096

Note: This parameter is not saved when data is backed-up (p0971, p0977).
DI: Digital Input

© Siemens AG, 2005. All rights reserved

p4095 TM31 digital inputs, simulation mode / TM31 DI sim_mode

TM31

Can be changed: U, T | **Access level:** 2

Data type: Unsigned32 | **Data set:** - | **Function diagram:** 1840, 9550, 9552, 9560, 9562

P-Group: Terminals | **Units group:** - | **Unit selection:** -

Min	Max	Factory setting
0000 bin	0000 1111 1111 1111 bin	0000 bin

Description: Sets the simulation mode for the digital inputs of terminal module 31 (TM31).

Bit field:

Bit	Signal name	0 signal	1 signal	FP
00	DI 0 (X520.1)	Terminal eval.	Simulation	-
01	DI 1 (X520.2)	Terminal eval.	Simulation	-
02	DI 2 (X520.3)	Terminal eval.	Simulation	-
03	DI 3 (X520.4)	Terminal eval.	Simulation	-
04	DI 4 (X530.1)	Terminal eval.	Simulation	-
05	DI 5 (X530.2)	Terminal eval.	Simulation	-
06	DI 6 (X530.3)	Terminal eval.	Simulation	-
07	DI 7 (X530.4)	Terminal eval.	Simulation	-
08	DI/DO 8 (X541.2)	Terminal eval.	Simulation	-
09	DI/DO 9 (X541.3)	Terminal eval.	Simulation	-
10	DI/DO 10 (X541.4)	Terminal eval.	Simulation	-
11	DI/DO 11 (X541.5)	Terminal eval.	Simulation	-

Dependency: The setpoint for the input signals is specified using p4096.
Refer to: p4096

Note: This parameter is not saved when data is backed-up (p0971, p0977).
DI: Digital Input
DI/DO: Bidirectional Digital Input/Output

p4095 TM41 digital inputs, simulation mode / TM41 DI sim_mode

TM41

Can be changed: U, T | **Access level:** 2

Data type: Unsigned32 | **Data set:** - | **Function diagram:** -

P-Group: Terminals | **Units group:** - | **Unit selection:** -

Min	Max	Factory setting
0000 bin	0000 1111 1111 1111 bin	0000 bin

Description: Sets the simulation mode for the digital inputs of terminal module 41 (TM41).

Bit field:

Bit	Signal name	0 signal	1 signal	FP
00	DI 0 (X522.1)	Terminal eval.	Simulation	-
01	DI 1 (X522.2)	Terminal eval.	Simulation	-
02	DI 2 (X522.3)	Terminal eval.	Simulation	-
03	DI 3 (X522.4)	Terminal eval.	Simulation	-
08	DI/DO 0 (X521.1)	Terminal eval.	Simulation	-
09	DI/DO 1 (X521.2)	Terminal eval.	Simulation	-
10	DI/DO 2 (X521.3)	Terminal eval.	Simulation	-
11	DI/DO 3 (X521.4)	Terminal eval.	Simulation	-

Dependency: The setpoint for the input signals is specified using p4096.
Refer to: p4096

Note: This parameter is not saved when data is backed-up (p0971, p0977).
DI: Digital Input
DI/DO: Bidirectional Digital Input/Output

© Siemens AG, 2005. All rights reserved

p4095 TM15DI/DO digital inputs, simulation mode / TM15D DI sim_mode

TM15DI/DO

Can be changed: U, T | **Access level:** 2

Data type: Unsigned32 | **Data set:** - | **Function diagram:** 9400, 9401, 9402

P-Group: Terminals | **Units group:** - | **Unit selection:** -

Min	Max	Factory setting
0000 bin	0000 0000 1111 1111 1111 1111 1111 1111 bin	0000 bin

Description: Sets the simulation mode for the digital inputs of terminal module 15 (TM15).

Bit field:

Bit	Signal name	0 signal	1 signal	FP
00	DI/DO 0 (X520.2)	Terminal eval.	Simulation	-
01	DI/DO 1 (X520.3)	Terminal eval.	Simulation	-
02	DI/DO 2 (X520.4)	Terminal eval.	Simulation	-
03	DI/DO 3 (X520.5)	Terminal eval.	Simulation	-
04	DI/DO 4 (X520.6)	Terminal eval.	Simulation	-
05	DI/DO 5 (X520.7)	Terminal eval.	Simulation	-
06	DI/DO 6 (X520.8)	Terminal eval.	Simulation	-
07	DI/DO 7 (X520.9)	Terminal eval.	Simulation	-
08	DI/DO 8 (X521.2)	Terminal eval.	Simulation	-
09	DI/DO 9 (X521.3)	Terminal eval.	Simulation	-
10	DI/DO 10 (X521.4)	Terminal eval.	Simulation	-
11	DI/DO 11 (X521.5)	Terminal eval.	Simulation	-
12	DI/DO 12 (X521.6)	Terminal eval.	Simulation	-
13	DI/DO 13 (X521.7)	Terminal eval.	Simulation	-
14	DI/DO 14 (X521.8)	Terminal eval.	Simulation	-
15	DI/DO 15 (X521.9)	Terminal eval.	Simulation	-
16	DI/DO 16 (X522.2)	Terminal eval.	Simulation	-
17	DI/DO 17 (X522.3)	Terminal eval.	Simulation	-
18	DI/DO 18 (X522.4)	Terminal eval.	Simulation	-
19	DI/DO 19 (X522.5)	Terminal eval.	Simulation	-
20	DI/DO 20 (X522.6)	Terminal eval.	Simulation	-
21	DI/DO 21 (X522.7)	Terminal eval.	Simulation	-
22	DI/DO 22 (X522.8)	Terminal eval.	Simulation	-
23	DI/DO 23 (X522.9)	Terminal eval.	Simulation	-

Dependency: The setpoint for the input signals is specified using p4096.
Refer to: p4096

Note: This parameter is not saved when data is backed-up (p0971, p0977).
DI/DO: Bidirectional Digital Input/Output

p4096 TB30 digital inputs, simulation mode setpoint / TB30 DI sim setpt

TB30

Can be changed: U, T | **Access level:** 2

Data type: Unsigned32 | **Data set:** - | **Function diagram:** 1790, 9100

P-Group: Commands | **Units group:** - | **Unit selection:** -

Min	Max	Factory setting
0000 bin	1111 bin	0000 bin

Description: Sets the setpoint for the input signals in the simulation mode of the digital inputs of the Terminal Board 30 (TB30).

Bit field:

Bit	Signal name	0 signal	1 signal	FP
00	DI 0 (X481.1)	Low	High	-
01	DI 1 (X481.2)	Low	High	-
02	DI 2 (X481.3)	Low	High	-
03	DI 3 (X481.4)	Low	High	-

Dependency: The simulation of a digital input is selected using p4095.
Refer to: p4095

Note: This parameter is not saved when data is backed-up (p0971, p0977).
DI: Digital Input

© Siemens AG, 2005. All rights reserved

p4096 TM31 digital inputs, simulation mode setpoint / TM31 DI sim setpt

TM31

Can be changed: U, T | **Access level:** 2

Data type: Unsigned32 | **Data set:** - | **Function diagram:** 1840, 9550, 9552, 9560, 9562

P-Group: Terminals | **Units group:** - | **Unit selection:** -

Min	Max	Factory setting
0000 bin	0000 1111 1111 1111 bin	0000 bin

Description: Sets the setpoint for the input signals in the simulation mode of the digital inputs of terminal module 31 (TM31).

Bit field:

Bit	Signal name	0 signal	1 signal	FP
00	DI 0 (X520.1)	Low	High	-
01	DI 1 (X520.2)	Low	High	-
02	DI 2 (X520.3)	Low	High	-
03	DI 3 (X520.4)	Low	High	-
04	DI 4 (X530.1)	Low	High	-
05	DI 5 (X530.2)	Low	High	-
06	DI 6 (X530.3)	Low	High	-
07	DI 7 (X530.4)	Low	High	-
08	DI/DO 8 (X541.2)	Low	High	-
09	DI/DO 9 (X541.3)	Low	High	-
10	DI/DO 10 (X541.4)	Low	High	-
11	DI/DO 11 (X541.5)	Low	High	-

Dependency: The simulation of a digital input is selected using p4095.
Refer to: p4095

Note: This parameter is not saved when data is backed-up (p0971, p0977).
DI: Digital Input
DI/DO: Bidirectional Digital Input/Output

p4096 TM41 digital inputs, simulation mode setpoint / TM41 DI sim setpt

TM41

Can be changed: U, T | **Access level:** 2

Data type: Unsigned32 | **Data set:** - | **Function diagram:** -

P-Group: Terminals | **Units group:** - | **Unit selection:** -

Min	Max	Factory setting
0000 bin	0000 1111 1111 1111 bin	0000 bin

Description: Sets the setpoint for the input signals in the simulation mode of the digital inputs of terminal module 41 (TM41).

Bit field:

Bit	Signal name	0 signal	1 signal	FP
00	DI 0 (X522.1)	Low	High	-
01	DI 1 (X522.2)	Low	High	-
02	DI 2 (X522.3)	Low	High	-
03	DI 3 (X522.4)	Low	High	-
08	DI/DO 0 (X241.1)	Low	High	-
09	DI/DO 1 (X521.2)	Low	High	-
10	DI/DO 2 (X521.3)	Low	High	-
11	DI/DO 3 (X521.4)	Low	High	-

Dependency: The simulation of a digital input is selected using p4095.
Refer to: p4095

Note: This parameter is not saved when data is backed-up (p0971, p0977).
DI: Digital Input
DI/DO: Bidirectional Digital Input/Output

© Siemens AG, 2005. All rights reserved

p4096 TM15DI/DO digital inputs, simulation mode, setpoint / TM15D DI sim setpt

TM15DI/DO

Can be changed: U, T | **Access level:** 2

Data type: Unsigned32 | **Data set:** - | **Function diagram:** 9400, 9401, 9402

P-Group: Terminals | **Units group:** - | **Unit selection:** -

Min	Max	Factory setting
0000 bin	0000 0000 1111 1111 1111 1111 1111 1111 bin	0000 bin

Description: Sets the setpoint for the input signals in the simulation mode of the digital inputs of terminal module 15 (TM15).

Bit field:

Bit	Signal name	0 signal	1 signal	FP
00	DI/DO 0 (X520.2)	Low	High	-
01	DI/DO 1 (X520.3)	Low	High	-
02	DI/DO 2 (X520.4)	Low	High	-
03	DI/DO 3 (X520.5)	Low	High	-
04	DI/DO 4 (X520.6)	Low	High	-
05	DI/DO 5 (X520.7)	Low	High	-
06	DI/DO 6 (X520.8)	Low	High	-
07	DI/DO 7 (X520.9)	Low	High	-
08	DI/DO 8 (X521.2)	Low	High	-
09	DI/DO 9 (X521.3)	Low	High	-
10	DI/DO 10 (X521.4)	Low	High	-
11	DI/DO 11 (X521.5)	Low	High	-
12	DI/DO 12 (X521.6)	Low	High	-
13	DI/DO 13 (X521.7)	Low	High	-
14	DI/DO 14 (X521.8)	Low	High	-
15	DI/DO 15 (X521.9)	Low	High	-
16	DI/DO 16 (X522.2)	Low	High	-
17	DI/DO 17 (X522.3)	Low	High	-
18	DI/DO 18 (X522.4)	Low	High	-
19	DI/DO 19 (X522.5)	Low	High	-
20	DI/DO 20 (X522.6)	Low	High	-
21	DI/DO 21 (X522.7)	Low	High	-
22	DI/DO 22 (X522.8)	Low	High	-
23	DI/DO 23 (X522.9)	Low	High	-

Dependency: The simulation of a digital input is selected using p4095.
Refer to: p4095

Note: This parameter is not saved when data is backed-up (p0971, p0977).
DI/DO: Bidirectional Digital Input/Output

p4097[0...1] TB30 analog inputs simulation mode / TB30 AI sim_mode

TB30

Can be changed: U, T | **Access level:** 2

Data type: Integer16 | **Data set:** - | **Function diagram:** 9104

P-Group: Terminals | **Units group:** - | **Unit selection:** -

Min	Max	Factory setting
0	1	0

Description: Sets the simulation mode for the analog inputs of the Terminal Board 30 (TB30).

Values:
0: No simulation mode for analog input x
1: Simulation mode for analog input x

Index:
[0] = AI 0 (X482.1/X482.2)
[1] = AI 1 (X482.3/X482.4)

Dependency: The setpoint for the input voltage is specified via p4098.
Refer to: p4098

Note: This parameter is not saved when data is backed-up (p0971, p0977).
AI: Analog input

© Siemens AG, 2005. All rights reserved

p4097[0...1] TM31 analog inputs simulation mode / TM31 AI sim_mode

TM31	**Can be changed:** U, T		**Access level:** 2
	Data type: Integer16	**Data set:** -	**Function diagram:** 9566, 9568
	P-Group: Terminals	**Units group:** -	**Unit selection:** -
	Min	**Max**	**Factory setting**
	0	1	0

Description: Sets the simulation mode for the analog inputs of terminal module 31 (TM31).

Values:
0: No simulation mode for analog input x
1: Simulation mode for analog input x

Index:
[0] = AI 0 (X521.1/X521.2, S5.0)
[1] = AI 1 (X521.3/X521.4, S5.1)

Dependency: The setpoint for the input voltage is specified via p4098.
Refer to: p4098

Note: This parameter is not saved when data is backed-up (p0971, p0977).
AI: Analog input

p4097[0...0] TM41 analog input, simulation mode / TM41 AI sim_mode

TM41	**Can be changed:** U, T		**Access level:** 2
	Data type: Integer16	**Data set:** -	**Function diagram:** 9566, 9568
	P-Group: Terminals	**Units group:** -	**Unit selection:** -
	Min	**Max**	**Factory setting**
	0	1	0

Description: Sets the simulation mode for the analog input of terminal module 41 (TM41).

Values:
0: No simulation mode for analog input x
1: Simulation mode for analog input x

Index: [0] = AI 0 (X521.1/X521.2, S5.0)

Dependency: The setpoint for the input voltage is specified via p4098.
Refer to: p4098

Note: This parameter is not saved when data is backed-up (p0971, p0977).
AI: Analog input

p4098[0...1] TB30 analog inputs simulation mode setpoint / TB30 AI sim setpt

TB30	**Can be changed:** U, T		**Access level:** 2
	Data type: Floating Point	**Data set:** -	**Function diagram:** 9104
	P-Group: Terminals	**Units group:** VOLTAGE_AC_PP	**Unit selection:** -
	Min	**Max**	**Factory setting**
	-11.000 [V]	11.000 [V]	0.000 [V]

Description: Sets the setpoint for the input voltage in the simulation mode of the analog inputs of Terminal Board 30 (TB30).

Index:
[0] = AI 0 (X482.1/X482.2)
[1] = AI 1 (X482.3/X482.4)

Dependency: The simulation of an analog input is selected using p4097.
Refer to: p4097

Note: This parameter is not saved when data is backed-up (p0971, p0977).
AI: Analog input

© Siemens AG, 2005. All rights reserved

p4098[0...1] TM31 analog inputs simulation mode setpoint / TM31 AI sim setpt

TM31

Can be changed: U, T		**Access level:** 2
Data type: Floating Point	**Data set:** -	**Function diagram:** 9566, 9568
P-Group: Terminals	**Units group:** -	**Unit selection:** -
Min	**Max**	**Factory setting**
-20.000	20.000	0.000

Description: Sets the setpoint for the input value in simulation mode of the analog inputs of terminal module 31 (TM31).

Index: [0] = AI 0 (X521.1/X521.2, S5.0)
[1] = AI 1 (X521.3/X521.4, S5.1)

Dependency: The simulation of an analog input is selected using p4097.
If AI x is parameterized as voltage input (p4056), then the setpoint is a voltage in V.
If AI x is parameterized as current input (p4056), then the setpoint is current in mA.
Refer to: r4056, p4056, p4097

Note: This parameter is not saved when data is backed-up (p0971, p0977).
AI: Analog input

p4098[0...0] TM41 analog input, simulation mode setpoint / TM41 AI sim setpt

TM41

Can be changed: U, T		**Access level:** 2
Data type: Floating Point	**Data set:** -	**Function diagram:** 9566, 9568
P-Group: Terminals	**Units group:** -	**Unit selection:** -
Min	**Max**	**Factory setting**
-20.000	20.000	0.000

Description: Sets the setpoint for the input value in simulation mode of the analog input of terminal module 41 (TM41).

Index: [0] = AI 0 (X521.1/X521.2, S5.0)

Dependency: The simulation of the analog input is selected using p4097.
If AI x is parameterized as voltage input (p4056), then the setpoint is a voltage in V.
If AI x is parameterized as current input (p4056), then the setpoint is current in mA.
Refer to: p4097

Note: This parameter is not saved when data is backed-up (p0971, p0977).
AI: Analog input

p4099[0...2] TB30 inputs/outputs, sampling time / TB30 I/O t_sample

TB30

Can be changed: C1(3)		**Access level:** 4
Data type: Floating Point	**Data set:** -	**Function diagram:** 9100, 9102, 9104, 9106
P-Group: Commands	**Units group:** TIME_M6	**Unit selection:** -
Min	**Max**	**Factory setting**
0.00 [µs]	5000.00 [µs]	[0] 4000.00 [µs] [1] 4000.00 [µs] [2] 4000.00 [µs]

Description: Sets the sampling time for the inputs and outputs of the Terminal Board 30 (TB30).

Index: [0] = Digital inputs/outputs (DI/DO)
[1] = Analog inputs (AI)
[2] = Analog outputs (AO)

Dependency: The parameter can only be modified for p0009 = 3, 29.
The sampling times can only be set as an integer multiple of the basic sampling time (p0110, p0111).
Refer to: p0009, p0110, p0111

© Siemens AG, 2005. All rights reserved

Note: The modified sampling time is not effective until the drive unit is powered-up again.
For clock cycle synchronous PROFIBUS operation, the TB30 hardware (e.g. A/D converter) is operated with the PROFIBUS clock cycle (r2064[1]). This clock cycle is also kept after the PROFIBUS connection has been exited up to the next time that the Control Unit is powered-down. In this case, a faster sampling time than the PROFIBUS clock cycle is not practical in p4099[0...2].

p4099[0...2] TM31 inputs/outputs, sampling time / TM31 I/O t_sample

TM31

Can be changed: C1(3) **Access level:** 4
Data type: Floating Point **Data set:** - **Function diagram:** 9550
P-Group: Commands **Units group:** TIME_M6 **Unit selection:** -

Min	Max	Factory setting
0.00 [µs]	5000.00 [µs]	4000.00 [µs]

Description: Sets the sampling time for the inputs and outputs of terminal module 31 (TM31).
Index: [0] = Digital inputs/outputs (DI/DO)
[1] = Analog inputs (AI)
[2] = Analog outputs (AO)
Dependency: The parameter can only be modified for p0009 = 3, 29.
The sampling times can only be set as an integer multiple of the basic sampling time (p0110, p0111).
Refer to: p0009, p0110, p0111
Notice: The sampling times entered in index 0 (digital inputs/outputs) and index 2 (analog outputs) must always be greater than or equal to the sampling time in index 1 (analog inputs).
Note: The modified sampling time is not effective until the drive unit is powered-up again.

p4099[0...3] TM41 inputs/outputs, sampling time / TM41 I/O t_sample

TM41

Can be changed: C1(3) **Access level:** 4
Data type: Floating Point **Data set:** - **Function diagram:** 9550
P-Group: Commands **Units group:** TIME_M6 **Unit selection:** -

Min	Max	Factory setting
0.00 [µs]	5000.00 [µs]	[0] 4000.00 [µs] [1] 4000.00 [µs] [2] 0.00 [µs] [3] 125.00 [µs]

Description: Sets the sampling time for the inputs and outputs of terminal module 41 (TM41).
Index: [0] = Digital inputs/outputs (DI/DO)
[1] = Analog inputs (AI)
[2] = Does not exist
[3] = Encoder emulation
Dependency: The parameter can only be modified for p0009 = 3, 29.
The sampling times for the digital inputs/outputs and analog inputs can only be set as a multiple of the basic sampling time (p0110, p0111).
The sampling time of the encoder emulation must be set the same as the basic sampling time p0110[0] (p0111).
Refer to: p0009, p0110, p0111
Note: The modified sampling time is not effective until the drive unit is powered-up again.

© Siemens AG, 2005. All rights reserved

p4099 **TM17 inputs/outputs, sampling time / TM17 I/O t_sample**

TM17	**Can be changed:** C1(3)		**Access level:** 4
	Data type: Floating Point	**Data set:** -	**Function diagram:** -
	P-Group: Commands	**Units group:** TIME_M6	**Unit selection:** -
	Min	**Max**	**Factory setting**
	31.25 [µs]	400.00 [µs]	125.00 [µs]

Description: Sets the sampling time for the inputs and outputs of the terminal module 17 (TM17).
Dependency: The parameter can only be modified for p0009 = 3, 29.
The sampling time must be set the same as the basic sampling time p0110[0].
Refer to: p0110
Note: The modified sampling time is not effective until the drive unit is powered-up again.

p4099 **TM15 inputs/outputs, sampling time / TM15 I/O t_sample**

TM15	**Can be changed:** C1(3)		**Access level:** 4
	Data type: Floating Point	**Data set:** -	**Function diagram:** -
	P-Group: Commands	**Units group:** TIME_M6	**Unit selection:** -
	Min	**Max**	**Factory setting**
	31.25 [µs]	400.00 [µs]	125.00 [µs]

Description: Sets the sampling time for the inputs and outputs of terminal module 15 (TM15).
Dependency: The parameter can only be modified for p0009 = 3, 29.
The sampling time must be set the same as the basic sampling time p0110[0].
Refer to: p0110
Note: The modified sampling time is not effective until the drive unit is powered-up again.

p4099 **TM15DI/DO inputs/outputs, sampling time / TM15D I/O t_sampl**

TM15DI/DO	**Can be changed:** C1(3)		**Access level:** 4
	Data type: Floating Point	**Data set:** -	**Function diagram:** 9400, 9401, 9402
	P-Group: Commands	**Units group:** TIME_M6	**Unit selection:** -
	Min	**Max**	**Factory setting**
	0.00 [µs]	5000.00 [µs]	4000.00 [µs]

Description: Sets the sampling time for the inputs and outputs of terminal module 15 (TM15).
Dependency: The parameter can only be modified for p0009 = 3, 29.
The sampling times can only be set as an integer multiple of the basic sampling time (p0110, p0111).
Refer to: p0009, p0110, p0111
Note: The modified sampling time is not effective until the drive unit is powered-up again.

p4100 **TM31 temperature evaluation, sensor type / TM31 temp sens_typ**

TM31	**Can be changed:** T		**Access level:** 1
	Data type: Integer16	**Data set:** -	**Function diagram:** 9576, 9577
	P-Group: -	**Units group:** -	**Unit selection:** -
	Min	**Max**	**Factory setting**
	0	2	0

Description: Sets the temperature evaluation of terminal module 31 (TM31).
This means that the temperature sensor type is selected and the evaluation is switched-in.
Values:
0: Evaluation disabled
1: PTC thermistor
2: KTY84
Note: The temperature sensor is connected at terminals X522.7(+) and X522.8(-).

© Siemens AG, 2005. All rights reserved

r4101 TM31 temperature evaluation, sensor resistance / TM31 temp R_sensor

TM31	**Can be changed:** -		**Access level:** 3
	Data type: Unsigned16	**Data set:** -	**Function diagram:** 9576, 9577
	P-Group: Terminals	**Units group:** RESISTANCE	**Unit selection:** -
	Min	**Max**	**Factory setting**
	- [Ohm]	- [Ohm]	- [Ohm]

Description: Displays the actual resistance value of the temperature sensor connected at terminal module 31 (TM31).

Note: The temperature sensor is connected at terminals X522.7(+) and X522.8(-).
The maximum measurable resistance value is approx. 1700 Ohm.

p4102[0...1] TM31 temperature evaluation fault/alarm threshold / TM31 temp thresh

TM31	**Can be changed:** T		**Access level:** 1
	Data type: Integer16	**Data set:** -	**Function diagram:** 9576
	P-Group: -	**Units group:** TEMPERATURE	**Unit selection:** -
	Min	**Max**	**Factory setting**
	-48 [°C]	251 [°C]	[0] 100 [°C] [1] 120 [°C]

Description: Sets the fault/alarm threshold for the temperature evaluation of terminal module 31 (TM31).
Temperature actual value > p4102[0] --> alarm A35211 is output.
Temperature actual value > p4102[1] --> fault F35207 is output.

Index: [0] = Alarm threshold
[1] = Fault threshold

Dependency: Refer to: r4104

Warning! Fault F35207 only causes the drive to be shut down if there is at least one BICO interconnection between the drive and TM31.

Note: The temperature sensor is connected at terminals X522.7(+) and X522.8(-).
A value > 250 °C deactivates the alarm or fault.

r4104 BO: TM31 temperature evaluation, status / TM31 temp status

TM31	**Can be changed:** -		**Access level:** 1
	Data type: Unsigned16	**Data set:** -	**Function diagram:** 1840, 9576
	P-Group: Terminals	**Units group:** -	**Unit selection:** -
	Min	**Max**	**Factory setting**
	-	-	-

Description: Displays the status for the temperature evaluation of terminal module 31 (TM31).
This displays as to whether the temperature actual value has exceeded the fault/alarm threshold.

Bit field:

Bit	Signal name	0 signal	1 signal	FP
00	Temperature alarm threshold exceeded	No	Yes	-
01	Temperature fault threshold exceeded	No	Yes	-

Dependency: Refer to: p4102

© Siemens AG, 2005. All rights reserved

r4105 CO: TM31 temperature evaluation, actual value / TM31 temp actValue

TM31	**Can be changed:** -		**Access level:** 1
	Data type: Floating Point	**Data set:** -	**Function diagram:** 1840, 9576
	P-Group: Terminals	**Units group:** TEMPERATURE	**Unit selection:** -
	Min	**Max**	**Factory setting**
	- [°C]	- [°C]	- [°C]

Description: Displays the actual temperature value of the temperature evaluation of terminal module 31 (TM31).

Dependency: For sensor type PTC (p4100 = 1), the following applies:
- below the nominal response temperature, r4105 = -50°C.
- above the nominal response temperature, r4105 = 199.9 °C.

For sensor type KTY84-130 (p4100 = 2), the following applies:
- the displayed value corresponds to the temperature actual value.

Refer to: p4100

Note: The temperature sensor is connected at terminals X522.7(+) and X522.8(-).
For an invalid temperature actual value, (e.g. a short-circuit at the sensor input), r4105 = -300 °C is displayed.

r4154 TM41 diagnostics speed setpoint non-filtered / n_set non-filt

TM41	**Can be changed:** -		**Access level:** 3
	Data type: Floating Point	**Data set:** -	**Function diagram:** -
	P-Group: -	**Units group:** SPEED_ROT	**Unit selection:** -
	Min	**Max**	**Factory setting**
	- [1/min]	- [1/min]	- [1/min]

Description: Displays the unfiltered speed setpoint N_SETPT in revolutions per minute for diagnostic purposes. In contrast to p1155, the value is updated in each DRIVE-CLiQ basic clock cycle and displayed with sign.

Dependency: Refer to: r4155

r4155 TM41 diagnostics speed setpoint / TM41 DIAG n_set

TM41	**Can be changed:** -		**Access level:** 3
	Data type: Floating Point	**Data set:** -	**Function diagram:** 9674
	P-Group: -	**Units group:** SPEED_ROT	**Unit selection:** -
	Min	**Max**	**Factory setting**
	- [1/min]	- [1/min]	- [1/min]

Description: Displays the filtered speed setpoint N_SETPT in revolutions per minute for diagnostic purposes. In contrast to p1155, the value is updated in each DRIVE-CLiQ basic clock cycle and displayed with sign.

Dependency: Refer to: r4154

r4201 TM17 system time for synchronization / TM17 t_system sync

TM17	**Can be changed:** -		**Access level:** 3
	Data type: Unsigned16	**Data set:** -	**Function diagram:** -
	P-Group: Commands	**Units group:** -	**Unit selection:** -
	Min	**Max**	**Factory setting**
	-	-	-

Description: Is used to synchronize the timer of terminal module 17 (TM17) with the system time of the DP master.
To do this, the sign-of-life of the DP master is transferred in the form of a counter in bits 12 to 15.
At each cycle of the system of the DP master, bit 0 (SYN signal) is set for the duration of a DP master clock cycle.

© Siemens AG, 2005. All rights reserved

r4201 TM15 system time for synchronization / TM15 t_system sync

TM15

Can be changed: -
Access level: 3
Data type: Unsigned16
Data set: -
Function diagram: -
P-Group: Commands
Units group: -
Unit selection: -

Min	Max	Factory setting
-	-	-

Description: Is used to synchronize the timer of terminal module 15 (TM15) with the system time of the DP master.
To do this, the sign-of-life of the DP master is transferred in the form of a counter in bits 12 to 15.
At each cycle of the system of the DP master, bit 0 (SYN signal) is set for the duration of a DP master clock cycle.

r4204 TM17 control digital output 0 ... 15 / TM17 ctrl DO 0-15

TM17

Can be changed: -
Access level: 3
Data type: Unsigned16
Data set: -
Function diagram: -
P-Group: Commands
Units group: -
Unit selection: -

Min	Max	Factory setting
-	-	-

Description: Used to control digital output 0 ... 15 of terminal module 17 (TM17).

Bit field:

Bit	Signal name	0 signal	1 signal	FP
00	DI/DO 0 (X520.2)	Off	On	-
01	DI/DO 1 (X520.3)	Off	On	-
02	DI/DO 2 (X520.5)	Off	On	-
03	DI/DO 3 (X520.6)	Off	On	-
04	DI/DO 4 (X520.8)	Off	On	-
05	DI/DO 5 (X520.9)	Off	On	-
06	DI/DO 6 (X521.2)	Off	On	-
07	DI/DO 7 (X521.3)	Off	On	-
08	DI/DO 8 (X521.8)	Off	On	-
09	DI/DO 9 (X521.9)	Off	On	-
10	DI/DO 10 (X522.2)	Off	On	-
11	DI/DO 11 (X522.3)	Off	On	-
12	DI/DO 12 (X522.5)	Off	On	-
13	DI/DO 13 (X522.6)	Off	On	-
14	DI/DO 14 (X522.8)	Off	On	-
15	DI/DO 15 (X522.9)	Off	On	-

Note: DI/DO: Bidirectional Digital Input/Output

© Siemens AG, 2005. All rights reserved

r4204 TM15 control digital output 0 ... 15 / TM15 ctrl DO 0-15

TM15

Can be changed: -
Access level: 3
Data type: Unsigned16
Data set: -
Function diagram: -
P-Group: Commands
Units group: -
Unit selection: -

Min	Max	Factory setting
-	-	-

Description: Used to control digital output 0 ... 15 of terminal module 15 (TM15).

Bit field:

Bit	Signal name	0 signal	1 signal	FP
00	DI/DO 0 (X520.2)	Off	On	-
01	DI/DO 1 (X520.3)	Off	On	-
02	DI/DO 2 (X520.4)	Off	On	-
03	DI/DO 3 (X520.5)	Off	On	-
04	DI/DO 4 (X520.6)	Off	On	-
05	DI/DO 5 (X520.7)	Off	On	-
06	DI/DO 6 (X520.8)	Off	On	-
07	DI/DO 7 (X520.9)	Off	On	-
08	DI/DO 8 (X521.2)	Off	On	-
09	DI/DO 9 (X521.3)	Off	On	-
10	DI/DO 10 (X522.4)	Off	On	-
11	DI/DO 11 (X521.5)	Off	On	-
12	DI/DO 12 (X521.6)	Off	On	-
13	DI/DO 13 (X521.7)	Off	On	-
14	DI/DO 14 (X521.8)	Off	On	-
15	DI/DO 15 (X521.9)	Off	On	-

Note: DI/DO: Bidirectional Digital Input/Output

r4205 TM15 control digital output 16 ... 23 / TM15 ctrl DO 16-23

TM15

Can be changed: -
Access level: 3
Data type: Unsigned16
Data set: -
Function diagram: -
P-Group: Commands
Units group: -
Unit selection: -

Min	Max	Factory setting
-	-	-

Description: Used to control digital output 16 ... 23 of terminal module 15 (TM15).

Bit field:

Bit	Signal name	0 signal	1 signal	FP
00	DI/DO 16 (X522.2)	Off	On	-
01	DI/DO 17 (X522.3)	Off	On	-
02	DI/DO 18 (X522.4)	Off	On	-
03	DI/DO 19 (X522.5)	Off	On	-
04	DI/DO 20 (X522.6)	Off	On	-
05	DI/DO 21 (X522.7)	Off	On	-
06	DI/DO 22 (X522.8)	Off	On	-
07	DI/DO 23 (X522.9)	Off	On	-

Note: DI/DO: Bidirectional Digital Input/Output

© Siemens AG, 2005. All rights reserved

r4211 TM17 edge mode digital input 0 ... 7 / TM17 EdgMd DI 0-7

TM17	**Can be changed:** -		**Access level:** 3
	Data type: Unsigned16	**Data set:** -	**Function diagram:** -
	P-Group: Commands	**Units group:** -	**Unit selection:** -
	Min	**Max**	**Factory setting**
	-	-	-

Description: Displays the edge mode for digital input 0 ... 7 of terminal module 17 (TM17).
Assignment of the digital inputs to the bits:
DI 0: r4211.1 ... 0
DI 1: r4211.3 ... 2
DI 2: r4211.5 ... 4
DI 3: r4211.7 ... 6
DI 4: r4211.9 ... 8
DI 5: r4211.11 ... 10
DI 6: r4211.13 ... 12
DI 7: r4211.15 ... 14
Possible edge modes:
Bit x, y = 0, 0 --> no edge detection
Bit x, y = 0, 1 --> rising - rising edge
Bit x, y = 1, 0 --> falling - falling edge
Bit x, y = 1, 1 --> rising - falling edge or falling - rising edge

Note: DI: Digital Input

r4211 TM15 edge mode digital input 0 ... 7 / TM15 EdgMd DI0-7

TM15	**Can be changed:** -		**Access level:** 3
	Data type: Unsigned16	**Data set:** -	**Function diagram:** -
	P-Group: Commands	**Units group:** -	**Unit selection:** -
	Min	**Max**	**Factory setting**
	-	-	-

Description: Displays the edge mode for digital input 0 ... 7 of terminal module 15 (TM15).
Assignment of the digital inputs to the bits:
DI 0: r4211.1 ... 0
DI 1: r4211.3 ... 2
DI 2: r4211.5 ... 4
DI 3: r4211.7 ... 6
DI 4: r4211.9 ... 8
DI 5: r4211.11 ... 10
DI 6: r4211.13 ... 12
DI 7: r4211.15 ... 14
Possible edge modes:
Bit x, y = 0, 0 --> no edge detection
Bit x, y = 0, 1 --> rising - rising edge
Bit x, y = 1, 0 --> falling - falling edge
Bit x, y = 1, 1 --> rising - falling edge or falling - rising edge

Note: DI: Digital Input

© Siemens AG, 2005. All rights reserved

r4212 TM17 edge mode digital input 8 ... 15 / TM17 EdgMd DI 8-15

TM17	**Can be changed:** -		**Access level:** 3
	Data type: Unsigned16	**Data set:** -	**Function diagram:** -
	P-Group: Commands	**Units group:** -	**Unit selection:** -
	Min	**Max**	**Factory setting**
	-	-	-

Description: Displays the edge mode for digital input 8 ... 15 of terminal module 17 (TM17).
Assignment of the digital inputs to the bits:
DI 8: r4212.1 ... 0
DI 9: r4212.3 ... 2
DI 10: r4212.5 ... 4
DI 11: r4212.7 ... 6
DI 12: r4212.9 ... 8
DI 13: r4212.11 ... 10
DI 14: r4212.13 ... 12
DI 15: r4212.15 ... 14
Possible edge modes:
Bit x, y = 0, 0 --> no edge detection
Bit x, y = 0, 1 --> rising - rising edge
Bit x, y = 1, 0 --> falling - falling edge
Bit x, y = 1, 1 --> rising - falling edge or falling - rising edge

Note: DI: Digital Input

r4212 TM15 edge mode digital input 8 ... 15 / TM15 EdgMd DI8-15

TM15	**Can be changed:** -		**Access level:** 3
	Data type: Unsigned16	**Data set:** -	**Function diagram:** -
	P-Group: Commands	**Units group:** -	**Unit selection:** -
	Min	**Max**	**Factory setting**
	-	-	-

Description: Displays the edge mode for digital input 8 ... 15 of terminal module 15 (TM15).
Assignment of the digital inputs to the bits:
DI 8: r4212.1 ... 0
DI 9: r4212.3 ... 2
DI 10: r4212.5 ... 4
DI 11: r4212.7 ... 6
DI 12: r4212.9 ... 8
DI 13: r4212.11 ... 10
DI 14: r4212.13 ... 12
DI 15: r4212.15 ... 14
Possible edge modes:
Bit x, y = 0, 0 --> no edge detection
Bit x, y = 0, 1 --> rising - rising edge
Bit x, y = 1, 0 --> falling - falling edge
Bit x, y = 1, 1 --> rising - falling edge or falling - rising edge

Note: DI: Digital Input

© Siemens AG, 2005. All rights reserved

r4213 TM15 edge mode digital input 16 ... 23 / TM15 EdgMd DI16-23

TM15

Can be changed: -
Access level: 3
Data type: Unsigned16
Data set: -
Function diagram: -
P-Group: Commands
Units group: -
Unit selection: -

Min	Max	Factory setting
-	-	-

Description: Displays the edge mode for digital input 16 ... 23 of terminal module 15 (TM15).
Assignment of the digital inputs to the bits:
DI 16: r4213.1 ... 0
DI 17: r4213.3 ... 2
DI 18: r4213.5 ... 4
DI 19: r4213.7 ... 6
DI 20: r4213.9 ... 8
DI 21: r4213.11 ... 10
DI 22: r4213.13 ... 12
DI 23: r4213.15 ... 14
Possible edge modes:
Bit x, y = 0, 0 --> no edge detection
Bit x, y = 0, 1 --> rising - rising edge
Bit x, y = 1, 0 --> falling - falling edge
Bit x, y = 1, 1 --> rising - falling edge or falling - rising edge

Note: DI: Digital Input

p4220 TM17 enable DI/DO 0 ... 5 / TM17 enable 0-5

TM17

Can be changed: T
Access level: 2
Data type: Unsigned32
Data set: -
Function diagram: -
P-Group: Commands
Units group: -
Unit selection: -

Min	Max	Factory setting
0000 bin	0011 1111 0011 1111 bin	0000 bin

Description: Sets the enable signal with bits 0 ... 5 for DI/DO 0 ... 5 of terminal module 17 (TM17).
Sets the triggering of the enable signal with bits 8 ... 13.
The following assignment applies:
Enable signal for DI/DO 0, 1, 2, 3, 4 or 5 via DI/DO 10, 11, 12, 13, 14 or 15.

Bit field:

Bit	Signal name	0 signal	1 signal	FP
00	DI/DO 0 (X520.2)	Without enable	With enable	-
01	DI/DO 1 (X520.3)	Without enable	With enable	-
02	DI/DO 2 (X520.5)	Without enable	With enable	-
03	DI/DO 3 (X520.6)	Without enable	With enable	-
04	DI/DO 4 (X520.8)	Without enable	With enable	-
05	DI/DO 5 (X520.9)	Without enable	With enable	-
08	DI/DO 10 (X522.2)	Edge-triggered	Level-triggered	-
09	DI/DO 11 (X522.3)	Edge-triggered	Level-triggered	-
10	DI/DO 12 (X522.5)	Edge-triggered	Level-triggered	-
11	DI/DO 13 (X522.6)	Edge-triggered	Level-triggered	-
12	DI/DO 14 (X522.8)	Edge-triggered	Level-triggered	-
13	DI/DO 15 (X522.9)	Edge-triggered	Level-triggered	-

Note: DI/DO: Bidirectional Digital Input/Output

© Siemens AG, 2005. All rights reserved

p4221 TM17 smoothing time constant, digital input 0 ... 15 / TM17 smooth DI

TM17

Can be changed: U, T | **Access level:** 2

Data type: Unsigned32 | **Data set:** - | **Function diagram:** -

P-Group: Commands | **Units group:** - | **Unit selection:** -

Min	Max	Factory setting
0000 bin	1111 1111 1111 1111 bin	0000 bin

Description: Sets the smoothing time constant for digital input 0 ... 15 of terminal module 17 (TM17).

Bit field:

Bit	Signal name	0 signal	1 signal	FP
00	DI/DO 0 (X520.2)	Smoothing 125 µs	Smoothing 1 µs	-
01	DI/DO 1 (X520.3)	Smoothing 125 µs	Smoothing 1 µs	-
02	DI/DO 2 (X520.5)	Smoothing 125 µs	Smoothing 1 µs	-
03	DI/DO 3 (X520.6)	Smoothing 125 µs	Smoothing 1 µs	-
04	DI/DO 4 (X520.8)	Smoothing 125 µs	Smoothing 1 µs	-
05	DI/DO 5 (X520.9)	Smoothing 125 µs	Smoothing 1 µs	-
06	DI/DO 6 (X521.2)	Smoothing 125 µs	Smoothing 1 µs	-
07	DI/DO 7 (X521.3)	Smoothing 125 µs	Smoothing 1 µs	-
08	DI/DO 8 (X521.8)	Smoothing 125 µs	Smoothing 1 µs	-
09	DI/DO 9 (X521.9)	Smoothing 125 µs	Smoothing 1 µs	-
10	DI/DO 10 (X522.2)	Smoothing 125 µs	Smoothing 1 µs	-
11	DI/DO 11 (X522.3)	Smoothing 125 µs	Smoothing 1 µs	-
12	DI/DO 12 (X522.5)	Smoothing 125 µs	Smoothing 1 µs	-
13	DI/DO 13 (X522.6)	Smoothing 125 µs	Smoothing 1 µs	-
14	DI/DO 14 (X522.8)	Smoothing 125 µs	Smoothing 1 µs	-
15	DI/DO 15 (X522.9)	Smoothing 125 µs	Smoothing 1 µs	-

Note: DI/DO: Bidirectional Digital Input/Output
DI: Digital input

p4222 TM17 time, absolute/relative for digital output 0 ... 15 / TM17 abs/rel 0-15

TM17

Can be changed: T | **Access level:** 2

Data type: Unsigned32 | **Data set:** - | **Function diagram:** -

P-Group: Commands | **Units group:** - | **Unit selection:** -

Min	Max	Factory setting
0000 bin	1111 1111 1111 1111 bin	0000 bin

Description: Sets as absolute or relative timing with bit 0 ... 15 for digital output 0 ... 15 of terminal module 17 (TM17).

Bit field:

Bit	Signal name	0 signal	1 signal	FP
00	DI/DO 0 (X520.2)	Absolute time	Relative time	-
01	DI/DO 1 (X520.3)	Absolute time	Relative time	-
02	DI/DO 2 (X520.5)	Absolute time	Relative time	-
03	DI/DO 3 (X520.6)	Absolute time	Relative time	-
04	DI/DO 4 (X520.8)	Absolute time	Relative time	-
05	DI/DO 5 (X520.9)	Absolute time	Relative time	-
06	DI/DO 6 (X521.2)	Absolute time	Relative time	-
07	DI/DO 7 (X521.3)	Absolute time	Relative time	-
08	DI/DO 8 (X521.8)	Absolute time	Relative time	-
09	DI/DO 9 (X521.9)	Absolute time	Relative time	-
10	DI/DO 10 (X522.2)	Absolute time	Relative time	-
11	DI/DO 11 (X522.3)	Absolute time	Relative time	-
12	DI/DO 12 (X522.5)	Absolute time	Relative time	-
13	DI/DO 13 (X522.6)	Absolute time	Relative time	-
14	DI/DO 14 (X522.8)	Absolute time	Relative time	-
15	DI/DO 15 (X522.9)	Absolute time	Relative time	-

Note: DI/DO: Bidirectional Digital Input/Output
DO: Digital output

© Siemens AG, 2005. All rights reserved

r4250 **TM17 set/reset time, digital output 0 / TM17 t_set DO 0**

TM17	**Can be changed:** -		**Access level:** 3
	Data type: Unsigned32	**Data set:** -	**Function diagram:** -
	P-Group: Commands	**Units group:** -	**Unit selection:** -
	Min	**Max**	**Factory setting**
	-	-	-

Description: Displays the time to set and reset for digital output 0 of terminal module 17 (TM17).
The two times are specified as 16 bit values with a resolution of 0.25 µs.

Note: DO: Digital output

r4250 **TM15 set/reset time, digital output 0 / TM15 t_set DO 0**

TM15	**Can be changed:** -		**Access level:** 3
	Data type: Unsigned16	**Data set:** -	**Function diagram:** -
	P-Group: Commands	**Units group:** -	**Unit selection:** -
	Min	**Max**	**Factory setting**
	-	-	-

Description: Displays the time to set and reset for digital output 0 of terminal module 15 (TM15).
The two times are specified as 8 bit values with a resolution of 64 µs.

Note: DO: Digital output

r4251 **TM17 set/reset time, digital output 1 / TM17 t_set DO 1**

TM17	**Can be changed:** -		**Access level:** 3
	Data type: Unsigned32	**Data set:** -	**Function diagram:** -
	P-Group: Commands	**Units group:** -	**Unit selection:** -
	Min	**Max**	**Factory setting**
	-	-	-

Description: Displays the time to set and reset for digital output 1 of terminal module 17 (TM17).
The two times are specified as 16 bit values with a resolution of 0.25 µs.

Note: DO: Digital output

r4251 **TM15 set/reset time, digital output 1 / TM15 t_set DO 1**

TM15	**Can be changed:** -		**Access level:** 3
	Data type: Unsigned16	**Data set:** -	**Function diagram:** -
	P-Group: Commands	**Units group:** -	**Unit selection:** -
	Min	**Max**	**Factory setting**
	-	-	-

Description: Displays the time to set and reset for digital output 1 of terminal module 15 (TM15).
The two times are specified as 8 bit values with a resolution of 64 µs.

Note: DO: Digital output

r4252 **TM17 set/reset time, digital output 2 / TM17 t_set DO 2**

TM17	**Can be changed:** -		**Access level:** 3
	Data type: Unsigned32	**Data set:** -	**Function diagram:** -
	P-Group: Commands	**Units group:** -	**Unit selection:** -
	Min	**Max**	**Factory setting**
	-	-	-

Description: Displays the time to set and reset for digital output 2 of terminal module 17 (TM17).
The two times are specified as 16 bit values with a resolution of 0.25 µs.

Note: DO: Digital output

© Siemens AG, 2005. All rights reserved

r4252 **TM15 set/reset time, digital output 2 / TM15 t_set DO 2**

TM15

Can be changed: -
Access level: 3
Data type: Unsigned16
Data set: -
Function diagram: -
P-Group: Commands
Units group: -
Unit selection: -

Min	Max	Factory setting
-	-	-

Description: Displays the time to set and reset for digital output 2 of terminal module 15 (TM15).
The two times are specified as 8 bit values with a resolution of 64 µs.

Note: DO: Digital output

r4253 **TM17 set/reset time, digital output 3 / TM17 t_set DO 3**

TM17

Can be changed: -
Access level: 3
Data type: Unsigned32
Data set: -
Function diagram: -
P-Group: Commands
Units group: -
Unit selection: -

Min	Max	Factory setting
-	-	-

Description: Displays the time to set and reset for digital output 3 of terminal module 17 (TM17).
The two times are specified as 16 bit values with a resolution of 0.25 µs.

Note: DO: Digital output

r4253 **TM15 set/reset time, digital output 3 / TM15 t_set DO 3**

TM15

Can be changed: -
Access level: 3
Data type: Unsigned16
Data set: -
Function diagram: -
P-Group: Commands
Units group: -
Unit selection: -

Min	Max	Factory setting
-	-	-

Description: Displays the time to set and reset for digital output 3 of terminal module 15 (TM15).
The two times are specified as 8 bit values with a resolution of 64 µs.

Note: DO: Digital output

r4254 **TM17 set/reset time, digital output 4 / TM17 t_set DO 4**

TM17

Can be changed: -
Access level: 3
Data type: Unsigned32
Data set: -
Function diagram: -
P-Group: Commands
Units group: -
Unit selection: -

Min	Max	Factory setting
-	-	-

Description: Displays the time to set and reset for digital output 4 of terminal module 17 (TM17).
The two times are specified as 16 bit values with a resolution of 0.25 µs.

Note: DO: Digital output

r4254 **TM15 set/reset time, digital output 4 / TM15 t_set DO 4**

TM15

Can be changed: -
Access level: 3
Data type: Unsigned16
Data set: -
Function diagram: -
P-Group: Commands
Units group: -
Unit selection: -

Min	Max	Factory setting
-	-	-

Description: Displays the time to set and reset for digital output 4 of terminal module 15 (TM15).
The two times are specified as 8 bit values with a resolution of 64 µs.

Note: DO: Digital output

© Siemens AG, 2005. All rights reserved

r4255 **TM17 set/reset time, digital output 5 / TM17 t_set DO 5**

TM17	**Can be changed:** -		**Access level:** 3
	Data type: Unsigned32	**Data set:** -	**Function diagram:** -
	P-Group: Commands	**Units group:** -	**Unit selection:** -
	Min	**Max**	**Factory setting**
	-	-	-

Description: Displays the time to set and reset for digital output 5 of terminal module 17 (TM17).
The two times are specified as 16 bit values with a resolution of 0.25 µs.

Note: DO: Digital output

r4255 **TM15 set/reset time, digital output 5 / TM15 t_set DO 5**

TM15	**Can be changed:** -		**Access level:** 3
	Data type: Unsigned16	**Data set:** -	**Function diagram:** -
	P-Group: Commands	**Units group:** -	**Unit selection:** -
	Min	**Max**	**Factory setting**
	-	-	-

Description: Displays the time to set and reset for digital output 5 of terminal module 15 (TM15).
The two times are specified as 8 bit values with a resolution of 64 µs.

Note: DO: Digital output

r4256 **TM17 set/reset time, digital output 6 / TM17 t_set DO 6**

TM17	**Can be changed:** -		**Access level:** 3
	Data type: Unsigned32	**Data set:** -	**Function diagram:** -
	P-Group: Commands	**Units group:** -	**Unit selection:** -
	Min	**Max**	**Factory setting**
	-	-	-

Description: Displays the time to set and reset for digital output 6 of terminal module 17 (TM17).
The two times are specified as 16 bit values with a resolution of 0.25 µs.

Note: DO: Digital output

r4256 **TM15 set/reset time, digital output 6 / TM15 t_set DO 6**

TM15	**Can be changed:** -		**Access level:** 3
	Data type: Unsigned16	**Data set:** -	**Function diagram:** -
	P-Group: Commands	**Units group:** -	**Unit selection:** -
	Min	**Max**	**Factory setting**
	-	-	-

Description: Displays the time to set and reset for digital output 6 of terminal module 15 (TM15).
The two times are specified as 8 bit values with a resolution of 64 µs.

Note: DO: Digital output

r4257 **TM17 set/reset time, digital output 7 / TM17 t_set DO 7**

TM17	**Can be changed:** -		**Access level:** 3
	Data type: Unsigned32	**Data set:** -	**Function diagram:** -
	P-Group: Commands	**Units group:** -	**Unit selection:** -
	Min	**Max**	**Factory setting**
	-	-	-

Description: Displays the time to set and reset for digital output 7 of terminal module 17 (TM17).
The two times are specified as 16 bit values with a resolution of 0.25 µs.

Note: DO: Digital output

© Siemens AG, 2005. All rights reserved

r4257 **TM15 set/reset time, digital output 7 / TM15 t_set DO 7**

TM15

Can be changed: -
Access level: 3
Data type: Unsigned16
Data set: -
Function diagram: -
P-Group: Commands
Units group: -
Unit selection: -

Min	Max	Factory setting
-	-	-

Description: Displays the time to set and reset for digital output 7 of terminal module 15 (TM15).
The two times are specified as 8 bit values with a resolution of 64 µs.

Note: DO: Digital output

r4258 **TM17 set/reset time, digital output 8 / TM17 t_set DO 8**

TM17

Can be changed: -
Access level: 3
Data type: Unsigned32
Data set: -
Function diagram: -
P-Group: Commands
Units group: -
Unit selection: -

Min	Max	Factory setting
-	-	-

Description: Displays the time to set and reset for digital output 8 of terminal module 17 (TM17).
The two times are specified as 16 bit values with a resolution of 0.25 µs.

Note: DO: Digital output

r4258 **TM15 set/reset time, digital output 8 / TM15 t_set DO 8**

TM15

Can be changed: -
Access level: 3
Data type: Unsigned16
Data set: -
Function diagram: -
P-Group: Commands
Units group: -
Unit selection: -

Min	Max	Factory setting
-	-	-

Description: Displays the time to set and reset for digital output 8 of terminal module 15 (TM15).
The two times are specified as 8 bit values with a resolution of 64 µs.

Note: DO: Digital output

r4259 **TM17 set/reset time, digital output 9 / TM17 t_set DO 9**

TM17

Can be changed: -
Access level: 3
Data type: Unsigned32
Data set: -
Function diagram: -
P-Group: Commands
Units group: -
Unit selection: -

Min	Max	Factory setting
-	-	-

Description: Displays the time to set and reset for digital output 9 of terminal module 17 (TM17).
The two times are specified as 16 bit values with a resolution of 0.25 µs.

Note: DO: Digital output

r4259 **TM15 set/reset time, digital output 9 / TM15 t_set DO 9**

TM15

Can be changed: -
Access level: 3
Data type: Unsigned16
Data set: -
Function diagram: -
P-Group: Commands
Units group: -
Unit selection: -

Min	Max	Factory setting
-	-	-

Description: Displays the time to set and reset for digital output 9 of terminal module 15 (TM15).
The two times are specified as 8 bit values with a resolution of 64 µs.

Note: DO: Digital output

© Siemens AG, 2005. All rights reserved

r4260 **TM17 set/reset time, digital output 10 / TM17 t_set DO 10**

TM17	**Can be changed:** -		**Access level:** 3
	Data type: Unsigned32	**Data set:** -	**Function diagram:** -
	P-Group: Commands	**Units group:** -	**Unit selection:** -
	Min	**Max**	**Factory setting**
	-	-	-

Description: Displays the time to set and reset for digital output 10 of terminal module 17 (TM17).
The two times are specified as 16 bit values with a resolution of 0.25 µs.

Note: DO: Digital output

r4260 **TM15 set/reset time, digital output 10 / TM15 t_set DO 10**

TM15	**Can be changed:** -		**Access level:** 3
	Data type: Unsigned16	**Data set:** -	**Function diagram:** -
	P-Group: Commands	**Units group:** -	**Unit selection:** -
	Min	**Max**	**Factory setting**
	-	-	-

Description: Displays the time to set and reset for digital output 10 of terminal module 15 (TM15).
The two times are specified as 8 bit values with a resolution of 64 µs.

Note: DO: Digital output

r4261 **TM17 set/reset time, digital output 11 / TM17 t_set DO 11**

TM17	**Can be changed:** -		**Access level:** 3
	Data type: Unsigned32	**Data set:** -	**Function diagram:** -
	P-Group: Commands	**Units group:** -	**Unit selection:** -
	Min	**Max**	**Factory setting**
	-	-	-

Description: Displays the time to set and reset for digital output 11 of terminal module 17 (TM17).
The two times are specified as 16 bit values with a resolution of 0.25 µs.

Note: DO: Digital output

r4261 **TM15 set/reset time, digital output 11 / TM15 t_set DO 11**

TM15	**Can be changed:** -		**Access level:** 3
	Data type: Unsigned16	**Data set:** -	**Function diagram:** -
	P-Group: Commands	**Units group:** -	**Unit selection:** -
	Min	**Max**	**Factory setting**
	-	-	-

Description: Displays the time to set and reset for digital output 11 of terminal module 15 (TM15).
The two times are specified as 8 bit values with a resolution of 64 µs.

Note: DO: Digital output

r4262 **TM17 set/reset time, digital output 12 / TM17 t_set DO 12**

TM17	**Can be changed:** -		**Access level:** 3
	Data type: Unsigned32	**Data set:** -	**Function diagram:** -
	P-Group: Commands	**Units group:** -	**Unit selection:** -
	Min	**Max**	**Factory setting**
	-	-	-

Description: Displays the time to set and reset for digital output 12 of terminal module 17 (TM17).
The two times are specified as 16 bit values with a resolution of 0.25 µs.

Note: DO: Digital output

© Siemens AG, 2005. All rights reserved

r4262 **TM15 set/reset time, digital output 12 / TM15 t_set DO 12**

TM15

Can be changed: -		**Access level:** 3
Data type: Unsigned16	**Data set:** -	**Function diagram:** -
P-Group: Commands	**Units group:** -	**Unit selection:** -
Min	**Max**	**Factory setting**
-	-	-

Description: Displays the time to set and reset for digital output 12 of terminal module 15 (TM15).
The two times are specified as 8 bit values with a resolution of 64 µs.

Note: DO: Digital output

r4263 **TM17 set/reset time, digital output 13 / TM17 t_set DO 13**

TM17

Can be changed: -		**Access level:** 3
Data type: Unsigned32	**Data set:** -	**Function diagram:** -
P-Group: Commands	**Units group:** -	**Unit selection:** -
Min	**Max**	**Factory setting**
-	-	-

Description: Displays the time to set and reset for digital output 13 of terminal module 17 (TM17).
The two times are specified as 16 bit values with a resolution of 0.25 µs.

Note: DO: Digital output

r4263 **TM15 set/reset time, digital output 13 / TM15 t_set DO 13**

TM15

Can be changed: -		**Access level:** 3
Data type: Unsigned16	**Data set:** -	**Function diagram:** -
P-Group: Commands	**Units group:** -	**Unit selection:** -
Min	**Max**	**Factory setting**
-	-	-

Description: Displays the time to set and reset for digital output 13 of terminal module 15 (TM15).
The two times are specified as 8 bit values with a resolution of 64 µs.

Note: DO: Digital output

r4264 **TM17 set/reset time, digital output 14 / TM17 t_set DO 14**

TM17

Can be changed: -		**Access level:** 3
Data type: Unsigned32	**Data set:** -	**Function diagram:** -
P-Group: Commands	**Units group:** -	**Unit selection:** -
Min	**Max**	**Factory setting**
-	-	-

Description: Displays the time to set and reset for digital output 14 of terminal module 17 (TM17).
The two times are specified as 16 bit values with a resolution of 0.25 µs.

Note: DO: Digital output

r4264 **TM15 set/reset time, digital output 14 / TM15 t_set DO 14**

TM15

Can be changed: -		**Access level:** 3
Data type: Unsigned16	**Data set:** -	**Function diagram:** -
P-Group: Commands	**Units group:** -	**Unit selection:** -
Min	**Max**	**Factory setting**
-	-	-

Description: Displays the time to set and reset for digital output 14 of terminal module 15 (TM15).
The two times are specified as 8 bit values with a resolution of 64 µs.

Note: DO: Digital output

© Siemens AG, 2005. All rights reserved

r4265 **TM17 set/reset time, digital output 15 / TM17 t_set DO 15**

TM17	**Can be changed:** -		**Access level:** 3
	Data type: Unsigned32	**Data set:** -	**Function diagram:** -
	P-Group: Commands	**Units group:** -	**Unit selection:** -
	Min	**Max**	**Factory setting**
	-	-	-

Description: Displays the time to set and reset for digital output 15 of terminal module 17 (TM17).
The two times are specified as 16 bit values with a resolution of 0.25 µs.

Note: DO: Digital output

r4265 **TM15 set/reset time, digital output 15 / TM15 t_set DO 15**

TM15	**Can be changed:** -		**Access level:** 3
	Data type: Unsigned16	**Data set:** -	**Function diagram:** -
	P-Group: Commands	**Units group:** -	**Unit selection:** -
	Min	**Max**	**Factory setting**
	-	-	-

Description: Displays the time to set and reset for digital output 15 of terminal module 15 (TM15).
The two times are specified as 8 bit values with a resolution of 64 µs.

Note: DO: Digital output

r4266 **TM15 set/reset time, digital output 16 / TM15 t_set DO 16**

TM15	**Can be changed:** -		**Access level:** 3
	Data type: Unsigned16	**Data set:** -	**Function diagram:** -
	P-Group: Commands	**Units group:** -	**Unit selection:** -
	Min	**Max**	**Factory setting**
	-	-	-

Description: Displays the time to set and reset for digital output 16 of terminal module 15 (TM15).
The two times are specified as 8 bit values with a resolution of 64 µs.

Note: DO: Digital output

r4267 **TM15 set/reset time, digital output 17 / TM15 t_set DO 17**

TM15	**Can be changed:** -		**Access level:** 3
	Data type: Unsigned16	**Data set:** -	**Function diagram:** -
	P-Group: Commands	**Units group:** -	**Unit selection:** -
	Min	**Max**	**Factory setting**
	-	-	-

Description: Displays the time to set and reset for digital output 17 of terminal module 15 (TM15).
The two times are specified as 8 bit values with a resolution of 64 µs.

Note: DO: Digital output

r4268 **TM15 set/reset time, digital output 18 / TM15 t_set DO 18**

TM15	**Can be changed:** -		**Access level:** 3
	Data type: Unsigned16	**Data set:** -	**Function diagram:** -
	P-Group: Commands	**Units group:** -	**Unit selection:** -
	Min	**Max**	**Factory setting**
	-	-	-

Description: Displays the time to set and reset for digital output 18 of terminal module 15 (TM15).
The two times are specified as 8 bit values with a resolution of 64 µs.

Note: DO: Digital output

© Siemens AG, 2005. All rights reserved

r4269 **TM15 set/reset time, digital output 19 / TM15 t_set DO 19**

TM15	**Can be changed:** -		**Access level:** 3
	Data type: Unsigned16	**Data set:** -	**Function diagram:** -
	P-Group: Commands	**Units group:** -	**Unit selection:** -
	Min	**Max**	**Factory setting**
	-	-	-

Description: Displays the time to set and reset for digital output 19 of terminal module 15 (TM15).
The two times are specified as 8 bit values with a resolution of 64 µs.

Note: DO: Digital output

r4270 **TM15 set/reset time, digital output 20 / TM15 t_set DO 20**

TM15	**Can be changed:** -		**Access level:** 3
	Data type: Unsigned16	**Data set:** -	**Function diagram:** -
	P-Group: Commands	**Units group:** -	**Unit selection:** -
	Min	**Max**	**Factory setting**
	-	-	-

Description: Displays the time to set and reset for digital output 20 of terminal module 15 (TM15).
The two times are specified as 8 bit values with a resolution of 64 µs.

Note: DO: Digital output

r4271 **TM15 set/reset time, digital output 21 / TM15 t_set DO 21**

TM15	**Can be changed:** -		**Access level:** 3
	Data type: Unsigned16	**Data set:** -	**Function diagram:** -
	P-Group: Commands	**Units group:** -	**Unit selection:** -
	Min	**Max**	**Factory setting**
	-	-	-

Description: Displays the time to set and reset for digital output 21 of terminal module 15 (TM15).
The two times are specified as 8 bit values with a resolution of 64 µs.

Note: DO: Digital output

r4272 **TM15 set/reset time, digital output 22 / TM15 t_set DO 22**

TM15	**Can be changed:** -		**Access level:** 3
	Data type: Unsigned16	**Data set:** -	**Function diagram:** -
	P-Group: Commands	**Units group:** -	**Unit selection:** -
	Min	**Max**	**Factory setting**
	-	-	-

Description: Displays the time to set and reset for digital output 22 of terminal module 15 (TM15).
The two times are specified as 8 bit values with a resolution of 64 µs.

Note: DO: Digital output

r4273 **TM15 set/reset time, digital output 23 / TM15 t_set DO 23**

TM15	**Can be changed:** -		**Access level:** 3
	Data type: Unsigned16	**Data set:** -	**Function diagram:** -
	P-Group: Commands	**Units group:** -	**Unit selection:** -
	Min	**Max**	**Factory setting**
	-	-	-

Description: Displays the time to set and reset for digital output 23 of terminal module 15 (TM15).
The two times are specified as 8 bit values with a resolution of 64 µs.

Note: DO: Digital output

© Siemens AG, 2005. All rights reserved

r4301 TM17 module synchronization / TM17 Module sync

TM17

Can be changed: - **Access level:** 3
Data type: Unsigned16 **Data set:** - **Function diagram:** -
P-Group: Commands **Units group:** - **Unit selection:** -

Min	Max	Factory setting
-	-	-

Description: Is used to synchronize the timer of terminal module 17 (TM17) with the system time of the DP master.
Bit 12 ... 15:
After synchronization with the DP master, the module sends its sign-of-life in the form of a counter.
Bit 0:
This SYNC signal is set if the module has aligned its time to the system time of the DP master.
Bit 9:
This bit is set if a fault has occurred on the module (r0945).

r4301 TM15 module synchronization / TM15 module sync

TM15

Can be changed: - **Access level:** 3
Data type: Unsigned16 **Data set:** - **Function diagram:** -
P-Group: Commands **Units group:** - **Unit selection:** -

Min	Max	Factory setting
-	-	-

Description: Is used to synchronize the timer of terminal module 15 (TM15) with the system time of the DP master.
Bit 12 ... 15:
After synchronization with the DP master, the module sends its sign-of-life in the form of a counter.
Bit 0:
This SYNC signal is set if the module has aligned its time to the system time of the DP master.
Bit 9:
This bit is set if a fault has occurred on the module (r0945).

r4304 TM17 status, digital input 0 ... 15 / TM17 St DI 0-15

TM17

Can be changed: - **Access level:** 3
Data type: Unsigned16 **Data set:** - **Function diagram:** -
P-Group: Commands **Units group:** - **Unit selection:** -

Min	Max	Factory setting
-	-	-

Description: Displays status for digital input 0 ... 15 of terminal module 17 (TM17).

Bit field:

Bit	Signal name	0 signal	1 signal	FP
00	DI/DO 0 (X520.2)	Off	On	-
01	DI/DO 1 (X520.3)	Off	On	-
02	DI/DO 2 (X520.5)	Off	On	-
03	DI/DO 3 (X520.6)	Off	On	-
04	DI/DO 4 (X520.8)	Off	On	-
05	DI/DO 5 (X520.9)	Off	On	-
06	DI/DO 6 (X521.2)	Off	On	-
07	DI/DO 7 (X521.3)	Off	On	-
08	DI/DO 8 (X521.8)	Off	On	-
09	DI/DO 9 (X521.9)	Off	On	-
10	DI/DO 10 (X522.2)	Off	On	-
11	DI/DO 11 (X522.3)	Off	On	-
12	DI/DO 12 (X522.5)	Off	On	-
13	DI/DO 13 (X522.6)	Off	On	-
14	DI/DO 14 (X522.8)	Off	On	-
15	DI/DO 15 (X522.9)	Off	On	-

Note: DI/DO: Bidirectional Digital Input/Output

© Siemens AG, 2005. All rights reserved

r4304 TM15 status, digital input 0 ... 15 / TM15 St DI 0-15

TM15

Can be changed: -
Access level: 3
Data type: Unsigned16
Data set: -
Function diagram: -
P-Group: Commands
Units group: -
Unit selection: -

Min	Max	Factory setting
-	-	-

Description: Displays status for digital input 0 ... 15 of terminal module 15 (TM15).

Bit field:

Bit	Signal name	0 signal	1 signal	FP
00	DI/DO 0 (X520.2)	Off	On	-
01	DI/DO 1 (X520.3)	Off	On	-
02	DI/DO 2 (X520.4)	Off	On	-
03	DI/DO 3 (X520.5)	Off	On	-
04	DI/DO 4 (X520.6)	Off	On	-
05	DI/DO 5 (X520.7)	Off	On	-
06	DI/DO 6 (X520.8)	Off	On	-
07	DI/DO 7 (X520.9)	Off	On	-
08	DI/DO 8 (X521.2)	Off	On	-
09	DI/DO 9 (X521.3)	Off	On	-
10	DI/DO 10 (X522.4)	Off	On	-
11	DI/DO 11 (X521.5)	Off	On	-
12	DI/DO 12 (X521.6)	Off	On	-
13	DI/DO 13 (X521.7)	Off	On	-
14	DI/DO 14 (X521.8)	Off	On	-
15	DI/DO 15 (X521.9)	Off	On	-

Note: DI/DO: Bidirectional Digital Input/Output

r4305 TM15 status, digital input 16 ... 23 / TM15 St DI 16-23

TM15

Can be changed: -
Access level: 3
Data type: Unsigned16
Data set: -
Function diagram: -
P-Group: Commands
Units group: -
Unit selection: -

Min	Max	Factory setting
-	-	-

Description: Displays status for digital input 16 ... 23 of terminal module 15 (TM15).

Bit field:

Bit	Signal name	0 signal	1 signal	FP
00	DI/DO 16 (X522.2)	Off	On	-
01	DI/DO 17 (X522.3)	Off	On	-
02	DI/DO 18 (X522.4)	Off	On	-
03	DI/DO 19 (X522.5)	Off	On	-
04	DI/DO 20 (X522.6)	Off	On	-
05	DI/DO 21 (X522.7)	Off	On	-
06	DI/DO 22 (X522.8)	Off	On	-
07	DI/DO 23 (X522.9)	Off	On	-

Note: DI/DO: Bidirectional Digital Input/Output

© Siemens AG, 2005. All rights reserved

r4311 **TM17 edge status digital input 0 ... 7 / TM17 EdgSt DI 0-7**

TM17	**Can be changed:** -		**Access level:** 3
	Data type: Unsigned16	**Data set:** -	**Function diagram:** -
	P-Group: Commands	**Units group:** -	**Unit selection:** -
	Min	**Max**	**Factory setting**
	-	-	-

Description: Displays the edge status for digital input 0 ... 7 of terminal module 17 (TM17).
Assignment of the digital inputs to the bits:
DI 0: r4311.1 ... 0
DI 1: r4311.3 ... 2
DI 2: r4311.5 ... 4
DI 3: r4311.7 ... 6
DI 4: r4311.9 ... 8
DI 5: r4311.11 ... 10
DI 6: r4311.13 ... 12
DI 7: r4311.15 ... 14
Possible edge states:
Bit x, y = 0, 0 --> no edge detection
Bit x, y = 0, 1 --> 1st edge detected
Bit x, y = 1, 0 --> 2nd edge detected
Bit x, y = 1, 1 --> both edges detected

Note: DI: Digital Input

r4311 **TM15 edge status digital input 0 ... 7 / TM15 EdgSt DI 0-7**

TM15	**Can be changed:** -		**Access level:** 3
	Data type: Unsigned16	**Data set:** -	**Function diagram:** -
	P-Group: Commands	**Units group:** -	**Unit selection:** -
	Min	**Max**	**Factory setting**
	-	-	-

Description: Displays the edge status for digital input 0 ... 7 of terminal module 15 (TM15).
Assignment of the digital inputs to the bits:
DI 0: r4311.1 ... 0
DI 1: r4311.3 ... 2
DI 2: r4311.5 ... 4
DI 3: r4311.7 ... 6
DI 4: r4311.9 ... 8
DI 5: r4311.11 ... 10
DI 6: r4311.13 ... 12
DI 7: r4311.15 ... 14
Possible edge states:
Bit x, y = 0, 0 --> no edge detection
Bit x, y = 0, 1 --> 1st edge detected
Bit x, y = 1, 0 --> 2nd edge detected
Bit x, y = 1, 1 --> both edges detected

Note: DI: Digital Input

© Siemens AG, 2005. All rights reserved

r4312 TM17 edge status digital input 8 ... 15 / TM17 EdgSt DI 8-15

TM17

Can be changed: -
Access level: 3
Data type: Unsigned16
Data set: -
Function diagram: -
P-Group: Commands
Units group: -
Unit selection: -

Min	Max	Factory setting
-	-	-

Description: Displays the edge status for digital input 8 ... 15 of terminal module 17 (TM17).
Assignment of the digital inputs to the bits:
DI 8: r4312.1 ... 0
DI 9: r4312.3 ... 2
DI 10: r4312.5 ... 4
DI 11: r4312.7 ... 6
DI 12: r4312.9 ... 8
DI 13: r4312.11 ... 10
DI 14: r4312.13 ... 12
DI 15: r4312.15 ... 14
Possible edge states:
Bit x, y = 0, 0 --> no edge detection
Bit x, y = 0, 1 --> 1st edge detected
Bit x, y = 1, 0 --> 2nd edge detected
Bit x, y = 1, 1 --> both edges detected

Note: DI: Digital Input

r4312 TM15 edge status digital input 8 ... 15 / TM15 EdgSt DI 8-15

TM15

Can be changed: -
Access level: 3
Data type: Unsigned16
Data set: -
Function diagram: -
P-Group: Commands
Units group: -
Unit selection: -

Min	Max	Factory setting
-	-	-

Description: Displays the edge status for digital input 8 ... 15 of terminal module 15 (TM15).
Assignment of the digital inputs to the bits:
DI 8: r4312.1 ... 0
DI 9: r4312.3 ... 2
DI 10: r4312.5 ... 4
DI 11: r4312.7 ... 6
DI 12: r4312.9 ... 8
DI 13: r4312.11 ... 10
DI 14: r4312.13 ... 12
DI 15: r4312.15 ... 14
Possible edge states:
Bit x, y = 0, 0 --> no edge detection
Bit x, y = 0, 1 --> 1st edge detected
Bit x, y = 1, 0 --> 2nd edge detected
Bit x, y = 1, 1 --> both edges detected

Note: DI: Digital Input

© Siemens AG, 2005. All rights reserved

r4313 TM15 edge status digital input 16 ... 23 / TM15 EdgSt DI16-23

TM15	**Can be changed:** -		**Access level:** 3
	Data type: Unsigned16	**Data set:** -	**Function diagram:** -
	P-Group: Commands	**Units group:** -	**Unit selection:** -
	Min	**Max**	**Factory setting**
	-	-	-

Description: Displays the edge status for digital input 16 ... 23 of terminal module 15 (TM15).
Assignment of the digital inputs to the bits:
DI 16: r4313.1 ... 0
DI 17: r4313.3 ... 2
DI 18: r4313.5 ... 4
DI 19: r4313.7 ... 6
DI 20: r4313.9 ... 8
DI 21: r4313.11 ... 10
DI 22: r4313.13 ... 12
DI 23: r4313.15 ... 14
Possible edge states:
Bit x, y = 0, 0 --> no edge detection
Bit x, y = 0, 1 --> 1st edge detected
Bit x, y = 1, 0 --> 2nd edge detected
Bit x, y = 1, 1 --> both edges detected

Note: DI: Digital Input

r4350 TM17 edge times digital input 0 / TM17 edge_t DI 0

TM17	**Can be changed:** -		**Access level:** 3
	Data type: Unsigned32	**Data set:** -	**Function diagram:** -
	P-Group: Commands	**Units group:** -	**Unit selection:** -
	Min	**Max**	**Factory setting**
	-	-	-

Description: Displays the time when detecting the 1st and 2nd edge for digital input 0 of terminal module 17 (TM17).
The two times are specified as 16 bit values with a resolution of 0.25 μs.

Note: DI: Digital Input

r4350 TM15 edge times digital input 0 / TM15 edge_t DI 0

TM15	**Can be changed:** -		**Access level:** 3
	Data type: Unsigned16	**Data set:** -	**Function diagram:** -
	P-Group: Commands	**Units group:** -	**Unit selection:** -
	Min	**Max**	**Factory setting**
	-	-	-

Description: Displays the time when detecting the 1st and 2nd edge for digital input 0 of terminal module 15 (TM15).
The two times are specified as 8 bit values with a resolution of 64 μs.

Note: DI: Digital Input

© Siemens AG, 2005. All rights reserved

r4351 **TM17 edge times digital input 1 / TM17 edge_t DI 1**

TM17	**Can be changed:** -		**Access level:** 3
	Data type: Unsigned32	**Data set:** -	**Function diagram:** -
	P-Group: Commands	**Units group:** -	**Unit selection:** -
	Min	**Max**	**Factory setting**
	-	-	-

Description: Displays the time when detecting the 1st and 2nd edge for digital input 1 of terminal module 17 (TM17).
The two times are specified as 16 bit values with a resolution of 0.25 µs.

Note: DI: Digital Input

r4351 **TM15 edge times digital input 1 / TM15 edge_t DI 1**

TM15	**Can be changed:** -		**Access level:** 3
	Data type: Unsigned16	**Data set:** -	**Function diagram:** -
	P-Group: Commands	**Units group:** -	**Unit selection:** -
	Min	**Max**	**Factory setting**
	-	-	-

Description: Displays the time when detecting the 1st and 2nd edge for digital input 1 of terminal module 15 (TM15).
The two times are specified as 8 bit values with a resolution of 64 µs.

Note: DI: Digital Input

r4352 **TM17 edge times digital input 2 / TM17 edge_t DI 2**

TM17	**Can be changed:** -		**Access level:** 3
	Data type: Unsigned32	**Data set:** -	**Function diagram:** -
	P-Group: Commands	**Units group:** -	**Unit selection:** -
	Min	**Max**	**Factory setting**
	-	-	-

Description: Displays the time when detecting the 1st and 2nd edge for digital input 2 of terminal module 17 (TM17).
The two times are specified as 16 bit values with a resolution of 0.25 µs.

Note: DI: Digital Input

r4352 **TM15 edge times digital input 2 / TM15 edge_t DI 2**

TM15	**Can be changed:** -		**Access level:** 3
	Data type: Unsigned16	**Data set:** -	**Function diagram:** -
	P-Group: Commands	**Units group:** -	**Unit selection:** -
	Min	**Max**	**Factory setting**
	-	-	-

Description: Displays the time when detecting the 1st and 2nd edge for digital input 2 of terminal module 15 (TM15).
The two times are specified as 8 bit values with a resolution of 64 µs.

Note: DI: Digital Input

r4353 **TM17 edge times digital input 3 / TM17 edge_t DI 3**

TM17	**Can be changed:** -		**Access level:** 3
	Data type: Unsigned32	**Data set:** -	**Function diagram:** -
	P-Group: Commands	**Units group:** -	**Unit selection:** -
	Min	**Max**	**Factory setting**
	-	-	-

Description: Displays the time when detecting the 1st and 2nd edge for digital input 3 of terminal module 17 (TM17).
The two times are specified as 16 bit values with a resolution of 0.25 µs.

Note: DI: Digital Input

© Siemens AG, 2005. All rights reserved

r4353 **TM15 edge times digital input 3 / TM15 edge_t DI 3**

TM15	**Can be changed:** -		**Access level:** 3
	Data type: Unsigned16	**Data set:** -	**Function diagram:** -
	P-Group: Commands	**Units group:** -	**Unit selection:** -
	Min	**Max**	**Factory setting**
	-	-	-

Description: Displays the time when detecting the 1st and 2nd edge for digital input 3 of terminal module 15 (TM15).
The two times are specified as 8 bit values with a resolution of 64 µs.

Note: DI: Digital Input

r4354 **TM17 edge times digital input 4 / TM17 edge_t DI 4**

TM17	**Can be changed:** -		**Access level:** 3
	Data type: Unsigned32	**Data set:** -	**Function diagram:** -
	P-Group: Commands	**Units group:** -	**Unit selection:** -
	Min	**Max**	**Factory setting**
	-	-	-

Description: Displays the time when detecting the 1st and 2nd edge for digital input 4 of terminal module 17 (TM17).
The two times are specified as 16 bit values with a resolution of 0.25 µs.

Note: DI: Digital Input

r4354 **TM15 edge times digital input 4 / TM15 edge_t DI 4**

TM15	**Can be changed:** -		**Access level:** 3
	Data type: Unsigned16	**Data set:** -	**Function diagram:** -
	P-Group: Commands	**Units group:** -	**Unit selection:** -
	Min	**Max**	**Factory setting**
	-	-	-

Description: Displays the time when detecting the 1st and 2nd edge for digital input 4 of terminal module 15 (TM15).
The two times are specified as 8 bit values with a resolution of 64 µs.

Note: DI: Digital Input

r4355 **TM17 edge times digital input 5 / TM17 edge_t DI 5**

TM17	**Can be changed:** -		**Access level:** 3
	Data type: Unsigned32	**Data set:** -	**Function diagram:** -
	P-Group: Commands	**Units group:** -	**Unit selection:** -
	Min	**Max**	**Factory setting**
	-	-	-

Description: Displays the time when detecting the 1st and 2nd edge for digital input 5 of terminal module 17 (TM17).
The two times are specified as 16 bit values with a resolution of 0.25 µs.

Note: DI: Digital Input

r4355 **TM15 edge times digital input 5 / TM15 edge_t DI 5**

TM15	**Can be changed:** -		**Access level:** 3
	Data type: Unsigned16	**Data set:** -	**Function diagram:** -
	P-Group: Commands	**Units group:** -	**Unit selection:** -
	Min	**Max**	**Factory setting**
	-	-	-

Description: Displays the time when detecting the 1st and 2nd edge for digital input 5 of terminal module 15 (TM15).
The two times are specified as 8 bit values with a resolution of 64 µs.

Note: DI: Digital Input

© Siemens AG, 2005. All rights reserved

r4356 **TM17 edge times digital input 6 / TM17 edge_t DI 6**

TM17

Can be changed: -		**Access level:** 3
Data type: Unsigned32	**Data set:** -	**Function diagram:** -
P-Group: Commands	**Units group:** -	**Unit selection:** -
Min	**Max**	**Factory setting**
-	-	-

Description: Displays the time when detecting the 1st and 2nd edge for digital input 6 of terminal module 17 (TM17).
The two times are specified as 16 bit values with a resolution of 0.25 µs.

Note: DI: Digital Input

r4356 **TM15 edge times digital input 6 / TM15 edge_t DI 6**

TM15

Can be changed: -		**Access level:** 3
Data type: Unsigned16	**Data set:** -	**Function diagram:** -
P-Group: Commands	**Units group:** -	**Unit selection:** -
Min	**Max**	**Factory setting**
-	-	-

Description: Displays the time when detecting the 1st and 2nd edge for digital input 6 of terminal module 15 (TM15).
The two times are specified as 8 bit values with a resolution of 64 µs.

Note: DI: Digital Input

r4357 **TM17 edge times digital input 7 / TM17 edge_t DI 7**

TM17

Can be changed: -		**Access level:** 3
Data type: Unsigned32	**Data set:** -	**Function diagram:** -
P-Group: Commands	**Units group:** -	**Unit selection:** -
Min	**Max**	**Factory setting**
-	-	-

Description: Displays the time when detecting the 1st and 2nd edge for digital input 7 of terminal module 17 (TM17).
The two times are specified as 16 bit values with a resolution of 0.25 µs.

Note: DI: Digital Input

r4357 **TM15 edge times digital input 7 / TM15 edge_t DI 7**

TM15

Can be changed: -		**Access level:** 3
Data type: Unsigned16	**Data set:** -	**Function diagram:** -
P-Group: Commands	**Units group:** -	**Unit selection:** -
Min	**Max**	**Factory setting**
-	-	-

Description: Displays the time when detecting the 1st and 2nd edge for digital input 7 of terminal module 15 (TM15).
The two times are specified as 8 bit values with a resolution of 64 µs.

Note: DI: Digital Input

r4358 **TM17 edge times digital input 8 / TM17 edge_t DI 8**

TM17

Can be changed: -		**Access level:** 3
Data type: Unsigned32	**Data set:** -	**Function diagram:** -
P-Group: Commands	**Units group:** -	**Unit selection:** -
Min	**Max**	**Factory setting**
-	-	-

Description: Displays the time when detecting the 1st and 2nd edge for digital input 8 of terminal module 17 (TM17).
The two times are specified as 16 bit values with a resolution of 0.25 µs.

Note: DI: Digital Input

© Siemens AG, 2005. All rights reserved

r4358 **TM15 edge times digital input 8 / TM15 edge_t DI 8**

TM15	**Can be changed:** -		**Access level:** 3
	Data type: Unsigned16	**Data set:** -	**Function diagram:** -
	P-Group: Commands	**Units group:** -	**Unit selection:** -
	Min	**Max**	**Factory setting**
	-	-	-

Description: Displays the time when detecting the 1st and 2nd edge for digital input 8 of terminal module 15 (TM15).
The two times are specified as 8 bit values with a resolution of 64 µs.

Note: DI: Digital Input

r4359 **TM17 edge times digital input 9 / TM17 edge_t DI 9**

TM17	**Can be changed:** -		**Access level:** 3
	Data type: Unsigned32	**Data set:** -	**Function diagram:** -
	P-Group: Commands	**Units group:** -	**Unit selection:** -
	Min	**Max**	**Factory setting**
	-	-	-

Description: Displays the time when detecting the 1st and 2nd edge for digital input 9 of terminal module 17 (TM17).
The two times are specified as 16 bit values with a resolution of 0.25 µs.

Note: DI: Digital Input

r4359 **TM15 edge times digital input 9 / TM15 edge_t DI 9**

TM15	**Can be changed:** -		**Access level:** 3
	Data type: Unsigned16	**Data set:** -	**Function diagram:** -
	P-Group: Commands	**Units group:** -	**Unit selection:** -
	Min	**Max**	**Factory setting**
	-	-	-

Description: Displays the time when detecting the 1st and 2nd edge for digital input 9 of terminal module 15 (TM15).
The two times are specified as 8 bit values with a resolution of 64 µs.

Note: DI: Digital Input

r4360 **TM17 edge times digital input 10 / TM17 edge_t DI 10**

TM17	**Can be changed:** -		**Access level:** 3
	Data type: Unsigned32	**Data set:** -	**Function diagram:** -
	P-Group: Commands	**Units group:** -	**Unit selection:** -
	Min	**Max**	**Factory setting**
	-	-	-

Description: Displays the time when detecting the 1st and 2nd edge for digital input 10 of terminal module 17 (TM17).
The two times are specified as 16 bit values with a resolution of 0.25 µs.

Note: DI: Digital Input

r4360 **TM15 edge times digital input 10 / TM15 edge_t DI 10**

TM15	**Can be changed:** -		**Access level:** 3
	Data type: Unsigned16	**Data set:** -	**Function diagram:** -
	P-Group: Commands	**Units group:** -	**Unit selection:** -
	Min	**Max**	**Factory setting**
	-	-	-

Description: Displays the time when detecting the 1st and 2nd edge for digital input 10 of terminal module 15 (TM15).
The two times are specified as 8 bit values with a resolution of 64 µs.

Note: DI: Digital Input

© Siemens AG, 2005. All rights reserved

r4361 **TM17 edge times digital input 11 / TM17 edge_t DI 11**

TM17	**Can be changed:** -		**Access level:** 3
	Data type: Unsigned32	**Data set:** -	**Function diagram:** -
	P-Group: Commands	**Units group:** -	**Unit selection:** -
	Min	**Max**	**Factory setting**
	-	-	-

Description: Displays the time when detecting the 1st and 2nd edge for digital input 11 of terminal module 17 (TM17).
The two times are specified as 16 bit values with a resolution of 0.25 µs.

Note: DI: Digital Input

r4361 **TM15 edge times digital input 11 / TM15 edge_t DI 11**

TM15	**Can be changed:** -		**Access level:** 3
	Data type: Unsigned16	**Data set:** -	**Function diagram:** -
	P-Group: Commands	**Units group:** -	**Unit selection:** -
	Min	**Max**	**Factory setting**
	-	-	-

Description: Displays the time when detecting the 1st and 2nd edge for digital input 11 of terminal module 15 (TM15).
The two times are specified as 8 bit values with a resolution of 64 µs.

Note: DI: Digital Input

r4362 **TM17 edge times digital input 12 / TM17 edge_t DI 12**

TM17	**Can be changed:** -		**Access level:** 3
	Data type: Unsigned32	**Data set:** -	**Function diagram:** -
	P-Group: Commands	**Units group:** -	**Unit selection:** -
	Min	**Max**	**Factory setting**
	-	-	-

Description: Displays the time when detecting the 1st and 2nd edge for digital input 12 of terminal module 17 (TM17).
The two times are specified as 16 bit values with a resolution of 0.25 µs.

Note: DI: Digital Input

r4362 **TM15 edge times digital input 12 / TM15 edge_t DI 12**

TM15	**Can be changed:** -		**Access level:** 3
	Data type: Unsigned16	**Data set:** -	**Function diagram:** -
	P-Group: Commands	**Units group:** -	**Unit selection:** -
	Min	**Max**	**Factory setting**
	-	-	-

Description: Displays the time when detecting the 1st and 2nd edge for digital input 12 of terminal module 15 (TM15).
The two times are specified as 8 bit values with a resolution of 64 µs.

Note: DI: Digital Input

r4363 **TM17 edge times digital input 13 / TM17 edge_t DI 13**

TM17	**Can be changed:** -		**Access level:** 3
	Data type: Unsigned32	**Data set:** -	**Function diagram:** -
	P-Group: Commands	**Units group:** -	**Unit selection:** -
	Min	**Max**	**Factory setting**
	-	-	-

Description: Displays the time when detecting the 1st and 2nd edge for digital input 13 of terminal module 17 (TM17).
The two times are specified as 16 bit values with a resolution of 0.25 µs.

Note: DI: Digital Input

© Siemens AG, 2005. All rights reserved

r4363 **TM15 edge times digital input 13 / TM15 edge_t DI 13**

TM15	**Can be changed:** -		**Access level:** 3
	Data type: Unsigned16	**Data set:** -	**Function diagram:** -
	P-Group: Commands	**Units group:** -	**Unit selection:** -
	Min	**Max**	**Factory setting**
	-	-	-

Description: Displays the time when detecting the 1st and 2nd edge for digital input 13 of terminal module 15 (TM15).
The two times are specified as 8 bit values with a resolution of 64 µs.

Note: DI: Digital Input

r4364 **TM17 edge times digital input 14 / TM17 edge_t DI 14**

TM17	**Can be changed:** -		**Access level:** 3
	Data type: Unsigned32	**Data set:** -	**Function diagram:** -
	P-Group: Commands	**Units group:** -	**Unit selection:** -
	Min	**Max**	**Factory setting**
	-	-	-

Description: Displays the time when detecting the 1st and 2nd edge for digital input 14 of terminal module 17 (TM17).
The two times are specified as 16 bit values with a resolution of 0.25 µs.

Note: DI: Digital Input

r4364 **TM15 edge times digital input 14 / TM15 edge_t DI 14**

TM15	**Can be changed:** -		**Access level:** 3
	Data type: Unsigned16	**Data set:** -	**Function diagram:** -
	P-Group: Commands	**Units group:** -	**Unit selection:** -
	Min	**Max**	**Factory setting**
	-	-	-

Description: Displays the time when detecting the 1st and 2nd edge for digital input 14 of terminal module 15 (TM15).
The two times are specified as 8 bit values with a resolution of 64 µs.

Note: DI: Digital Input

r4365 **TM17 edge times digital input 15 / TM17 edge_t DI 15**

TM17	**Can be changed:** -		**Access level:** 3
	Data type: Unsigned32	**Data set:** -	**Function diagram:** -
	P-Group: Commands	**Units group:** -	**Unit selection:** -
	Min	**Max**	**Factory setting**
	-	-	-

Description: Displays the time when detecting the 1st and 2nd edge for digital input 15 of terminal module 17 (TM17).
The two times are specified as 16 bit values with a resolution of 0.25 µs.

Note: DI: Digital Input

r4365 **TM15 edge times digital input 15 / TM15 edge_t DI 15**

TM15	**Can be changed:** -		**Access level:** 3
	Data type: Unsigned16	**Data set:** -	**Function diagram:** -
	P-Group: Commands	**Units group:** -	**Unit selection:** -
	Min	**Max**	**Factory setting**
	-	-	-

Description: Displays the time when detecting the 1st and 2nd edge for digital input 15 of terminal module 15 (TM15).
The two times are specified as 8 bit values with a resolution of 64 µs.

Note: DI: Digital Input

© Siemens AG, 2005. All rights reserved

r4366 TM15 edge times digital input 16 / TM15 edge_t DI 16

TM15

Can be changed: -
Access level: 3
Data type: Unsigned16
Data set: -
Function diagram: -
P-Group: Commands
Units group: -
Unit selection: -

Min	Max	Factory setting
-	-	-

Description: Displays the time when detecting the 1st and 2nd edge for digital input 16 of terminal module 15 (TM15).
The two times are specified as 8 bit values with a resolution of 64 µs.

Note: DI: Digital Input

r4367 TM15 edge times digital input 17 / TM15 edge_t DI 17

TM15

Can be changed: -
Access level: 3
Data type: Unsigned16
Data set: -
Function diagram: -
P-Group: Commands
Units group: -
Unit selection: -

Min	Max	Factory setting
-	-	-

Description: Displays the time when detecting the 1st and 2nd edge for digital input 17 of terminal module 15 (TM15).
The two times are specified as 8 bit values with a resolution of 64 µs.

Note: DI: Digital Input

r4368 TM15 edge times digital input 18 / TM15 edge_t DI 18

TM15

Can be changed: -
Access level: 3
Data type: Unsigned16
Data set: -
Function diagram: -
P-Group: Commands
Units group: -
Unit selection: -

Min	Max	Factory setting
-	-	-

Description: Displays the time when detecting the 1st and 2nd edge for digital input 18 of terminal module 15 (TM15).
The two times are specified as 8 bit values with a resolution of 64 µs.

Note: DI: Digital Input

r4369 TM15 edge times digital input 19 / TM15 edge_t DI 19

TM15

Can be changed: -
Access level: 3
Data type: Unsigned16
Data set: -
Function diagram: -
P-Group: Commands
Units group: -
Unit selection: -

Min	Max	Factory setting
-	-	-

Description: Displays the time when detecting the 1st and 2nd edge for digital input 19 of terminal module 15 (TM15).
The two times are specified as 8 bit values with a resolution of 64 µs.

Note: DI: Digital Input

r4370 TM15 edge times digital input 20 / TM15 edge_t DI 20

TM15

Can be changed: -
Access level: 3
Data type: Unsigned16
Data set: -
Function diagram: -
P-Group: Commands
Units group: -
Unit selection: -

Min	Max	Factory setting
-	-	-

Description: Displays the time when detecting the 1st and 2nd edge for digital input 20 of terminal module 15 (TM15).
The two times are specified as 8 bit values with a resolution of 64 µs.

Note: DI: Digital Input

© Siemens AG, 2005. All rights reserved

r4371 TM15 edge times digital input 21 / TM15 edge_t DI 21

TM15

Can be changed: -
Access level: 3
Data type: Unsigned16
Data set: -
Function diagram: -
P-Group: Commands
Units group: -
Unit selection: -

Min	Max	Factory setting
-	-	-

Description: Displays the time when detecting the 1st and 2nd edge for digital input 21 of terminal module 15 (TM15).
The two times are specified as 8 bit values with a resolution of 64 µs.

Note: DI: Digital Input

r4372 TM15 edge times digital input 22 / TM15 edge_t DI 22

TM15

Can be changed: -
Access level: 3
Data type: Unsigned16
Data set: -
Function diagram: -
P-Group: Commands
Units group: -
Unit selection: -

Min	Max	Factory setting
-	-	-

Description: Displays the time when detecting the 1st and 2nd edge for digital input 22 of terminal module 15 (TM15).
The two times are specified as 8 bit values with a resolution of 64 µs.

Note: DI: Digital Input

r4373 TM15 edge times digital input 23 / TM15 edge_t DI 23

TM15

Can be changed: -
Access level: 3
Data type: Unsigned16
Data set: -
Function diagram: -
P-Group: Commands
Units group: -
Unit selection: -

Min	Max	Factory setting
-	-	-

Description: Displays the time when detecting the 1st and 2nd edge for digital input 23 of terminal module 15 (TM15).
The two times are specified as 8 bit values with a resolution of 64 µs.

Note: DI: Digital Input

p4401 Incremental encoder emulation mode / Enc_emulat mode

TM41

Can be changed: U, T
Access level: 3
Data type: Unsigned16
Data set: -
Function diagram: 9674
P-Group: Closed-loop control
Units group: -
Unit selection: -

Min	Max	Factory setting
0000 bin	0001 bin	0001 bin

Description: Sets the mode for the incremental encoder emulation.

Bit field:

Bit	Signal name	0 signal	1 signal	FP
00	Enable zero mark	No	Yes	9674

© Siemens AG, 2005. All rights reserved

r4402 Incremental encoder emulation status / Enc_emulat status

TM41

Can be changed: -
Access level: 3
Data type: Unsigned16
Data set: -
Function diagram: 9674
P-Group: Closed-loop control
Units group: -
Unit selection: -

Min	Max	Factory setting
-	-	-

Description: Displays the status of the incremental encoder emulation on terminal module 41 (TM41).

Bit field:

Bit	Signal name	0 signal	1 signal	FP
00	Zero mark enabled	No	Yes	-
01	Tracks A/B enabled	No	Yes	-
02	Interface encoder emulation enabled	No	Yes	-

p4426 Incremental encoder emulation, pulses for zero mark / Enc_emul pulses ZM

TM41

Can be changed: C2(4)
Access level: 3
Data type: Unsigned32
Data set: -
Function diagram: 9674
P-Group: Encoder
Units group: -
Unit selection: -

Min	Max	Factory setting
0	8192	0

Description: Sets pulse number to output the zero mark for the incremental encoder simulation/emulation.
Example:
p0408 = 2048 (encoder pulses)
p4426 = 512 (pulses for the zero mark)
--> positive direction: The zero mark is output after 512 pulses.
--> negative direction: The zero mark is output after 1536 pulses.

Dependency: Refer to: p0408

Note: The pulses for the zero mark (p4426) must be less than the encoder pulse number (p0408).

p4700[0...1] Trace control / Trace control

CU_S

Can be changed: U, T
Access level: 3
Data type: Integer16
Data set: -
Function diagram: -
P-Group: Trace and function generator
Units group: -
Unit selection: -

Min	Max	Factory setting
0	1	0

Values:
0: Stop trace
1: Start trace

Index:
[0] = Trace 0
[1] = Trace 1

p4701 Measuring function, control / Meas fct ctrl

CU_S

Can be changed: U, T
Access level: 3
Data type: Integer16
Data set: -
Function diagram: -
P-Group: Trace and function generator
Units group: -
Unit selection: -

Min	Max	Factory setting
0	2	0

Values:
0: Stop measuring function
1: Start measuring function
2: Measuring function, check parameterization

© Siemens AG, 2005. All rights reserved

r4705[0...1] Trace status / Trace status

CU_S	**Can be changed:** -		**Access level:** 3
	Data type: Integer16	**Data set:** -	**Function diagram:** -
	P-Group: Trace and function generator	**Units group:** -	**Unit selection:** -
	Min	**Max**	**Factory setting**
	-	-	-

Description: Displays the current status of the trace.

Values:
0: Trace not active
1: Trace is recording presamples
2: Trace is waiting for trigger event
3: Trace is recording
4: Recording (trace) ended

Index: [0] = Trace 0
[1] = Trace 1

r4706 Measuring function, status / Meas fct status

CU_S	**Can be changed:** -		**Access level:** 3
	Data type: Integer16	**Data set:** -	**Function diagram:** -
	P-Group: Trace and function generator	**Units group:** -	**Unit selection:** -
	Min	**Max**	**Factory setting**
	-	-	-

Values:
0: Measurement function inactive
1: Measuring function, parameterization checked
2: Measuring function waits for stabilizing time
3: Measuring function recording (tracing)
4: Measuring function, trace ended with error
5: Measuring function, trace successfully completed

r4708[0...1] Trace memory space required / Trace mem required

CU_S	**Can be changed:** -		**Access level:** 3
	Data type: Unsigned32	**Data set:** -	**Function diagram:** -
	P-Group: Trace and function generator	**Units group:** -	**Unit selection:** -
	Min	**Max**	**Factory setting**
	-	-	-

Description: Displays the required memory in bytes for the actual parameterization.

Index: [0] = Trace 0
[1] = Trace 1

Dependency: Refer to: r4799

© Siemens AG, 2005. All rights reserved

p4710[0...1] Trace trigger condition / Trace Trig_cond

CU_S	**Can be changed:** U, T		**Access level:** 3
	Data type: Integer16	**Data set:** -	**Function diagram:** -
	P-Group: Trace and function generator	**Units group:** -	**Unit selection:** -
	Min	**Max**	**Factory setting**
	1	7	2

Description: Sets the trigger condition for the trace.

Values:
1: Immediate start
2: Positive edge
3: Negative edge
4: Entry to hysteresis band
5: Leaving hysteresis band
6: Trigger at bit mask
7: Start with function generator

Index: [0] = Trace 0
[1] = Trace 1

p4711[0...1] Trace trigger signal / Trace trig_signal

CU_S	**Can be changed:** U, T		**Access level:** 3
	Data type: Unsigned32	**Data set:** -	**Function diagram:** -
	P-Group: Trace and function generator	**Units group:** -	**Unit selection:** -
	Min	**Max**	**Factory setting**
	-	-	0

Description: Selects the trigger signal for the trace.
Or: Defines the data type of signal to be traced when selected using the physical address (p4789).

Index: [0] = Trace 0
[1] = Trace 1

Dependency: Only effective when p4710 does not equal 1.

p4712[0...1] Trace trigger threshold / Trace trig_thresh

CU_S	**Can be changed:** U, T		**Access level:** 3
	Data type: Floating Point	**Data set:** -	**Function diagram:** -
	P-Group: Trace and function generator	**Units group:** -	**Unit selection:** -
	Min	**Max**	**Factory setting**
	-340.28235E36	340.28235E36	0.00

Description: Sets the trigger threshold for the trace.

Index: [0] = Trace 0
[1] = Trace 1

Dependency: Only effective when p4710 = 2, 3.

p4713[0...1] Trace tolerance band trigger threshold / Trace trig thresh

CU_S	**Can be changed:** U, T		**Access level:** 3
	Data type: Floating Point	**Data set:** -	**Function diagram:** -
	P-Group: Trace and function generator	**Units group:** -	**Unit selection:** -
	Min	**Max**	**Factory setting**
	-340.28235E36	340.28235E36	0.00

Description: Sets the first trigger threshold for trigger via tolerance band.

Index: [0] = Trace 0
[1] = Trace 1

Dependency: Only effective when p4710 = 4, 5.

© Siemens AG, 2005. All rights reserved

p4714[0...1] Trace tolerance band trigger threshold / Trace trig thresh

CU_S	**Can be changed:** U, T		**Access level:** 3
	Data type: Floating Point	**Data set:** -	**Function diagram:** -
	P-Group: Trace and function generator	**Units group:** -	**Unit selection:** -
	Min	**Max**	**Factory setting**
	-340.28235E36	340.28235E36	0.00

Description: Sets the second trigger threshold for trigger via tolerance band
Index: [0] = Trace 0
[1] = Trace 1
Dependency: Only effective when p4710 = 4, 5.

p4715[0...1] Trace bit mask trigger, bit mask / Trace trig mask

CU_S	**Can be changed:** U, T		**Access level:** 3
	Data type: Unsigned32	**Data set:** -	**Function diagram:** -
	P-Group: Trace and function generator	**Units group:** -	**Unit selection:** -
	Min	**Max**	**Factory setting**
	0	4294967295	0

Description: Sets the bit mask for the bit mask trigger.
Index: [0] = Trace 0
[1] = Trace 1
Dependency: Only effective when p4710 = 6.

p4716[0...1] Trace, bit mask trigger, trigger condition / Trace Trig_cond

CU_S	**Can be changed:** U, T		**Access level:** 3
	Data type: Unsigned32	**Data set:** -	**Function diagram:** -
	P-Group: Trace and function generator	**Units group:** -	**Unit selection:** -
	Min	**Max**	**Factory setting**
	0	4294967295	0

Description: Sets the trigger condition for bit mask trigger.
Index: [0] = Trace 0
[1] = Trace 1
Dependency: Only effective when p4710 = 6.

p4717 Measuring function, number of averaging operations / Meas fct avg No.

CU_S	**Can be changed:** U, T		**Access level:** 3
	Data type: Unsigned8	**Data set:** -	**Function diagram:** -
	P-Group: Trace and function generator	**Units group:** -	**Unit selection:** -
	Min	**Max**	**Factory setting**
	0	255	0

p4718 Measuring function, number of stabilizing periods / MeasFct StabPerNo.

CU_S	**Can be changed:** U, T		**Access level:** 3
	Data type: Unsigned8	**Data set:** -	**Function diagram:** -
	P-Group: Trace and function generator	**Units group:** -	**Unit selection:** -
	Min	**Max**	**Factory setting**
	0	255	0

© Siemens AG, 2005. All rights reserved

r4719[0...1] Trace trigger index / Trace Trig_index

CU_S	**Can be changed:** -		**Access level:** 3
	Data type: Unsigned32	**Data set:** -	**Function diagram:** -
	P-Group: Trace and function generator	**Units group:** -	**Unit selection:** -
	Min	**Max**	**Factory setting**
	-	-	-

Description: Displays the trigger index in the trace buffer. The trigger event occurred at this point.
Index: [0] = Trace 0
[1] = Trace 1
Dependency: Only valid when p4705 = 4.

p4720[0...1] Trace recording cycle / Trace record_cyc

CU_S	**Can be changed:** U, T		**Access level:** 3
	Data type: Floating Point	**Data set:** -	**Function diagram:** -
	P-Group: Trace and function generator	**Units group:** TIME_M3	**Unit selection:** -
	Min	**Max**	**Factory setting**
	0.000 [ms]	60000.000 [ms]	1.000 [ms]

Description: Sets the recording cycle for the trace.
Index: [0] = Trace 0
[1] = Trace 1

p4721[0...1] Trace recording time / Trace record_time

CU_S	**Can be changed:** U, T		**Access level:** 3
	Data type: Floating Point	**Data set:** -	**Function diagram:** -
	P-Group: Trace and function generator	**Units group:** TIME_M3	**Unit selection:** -
	Min	**Max**	**Factory setting**
	0.000 [ms]	3600000.000 [ms]	1000.000 [ms]

Description: Sets the recording time for the trace.
Index: [0] = Trace 0
[1] = Trace 1

p4722[0...1] Trace trigger delay / Trace trig_delay

CU_S	**Can be changed:** U, T		**Access level:** 3
	Data type: Floating Point	**Data set:** -	**Function diagram:** -
	P-Group: Trace and function generator	**Units group:** TIME_M3	**Unit selection:** -
	Min	**Max**	**Factory setting**
	-3600000.000 [ms]	3600000.000 [ms]	0.000 [ms]

Description: Sets the trigger delay for the trace.
Trigger delay < 0:
Pretrigger: Tracing (recording) starts the selected time before the trigger event actually occurs.
Trigger delay > 0:
Post trigger: Tracing does not start until the set time after the trigger event.
Index: [0] = Trace 0
[1] = Trace 1

© Siemens AG, 2005. All rights reserved

p4723[0...1] Time slice cycle for trace / Trace cycle

CU_S	**Can be changed:** U, T		**Access level:** 3
	Data type: Floating Point	**Data set:** -	**Function diagram:** -
	P-Group: Trace and function generator	**Units group:** TIME_M3	**Unit selection:** -
	Min	**Max**	**Factory setting**
	0.03125 [ms]	4.00000 [ms]	0.12500 [ms]

Description: Sets the time slice cycle in which the trace is called.

Index: [0] = Trace 0
[1] = Trace 1

p4724[0...1] Trace average in the time range / Trace average

CU_S	**Can be changed:** U, T		**Access level:** 3
	Data type: Unsigned8	**Data set:** -	**Function diagram:** -
	P-Group: Trace and function generator	**Units group:** -	**Unit selection:** -
	Min	**Max**	**Factory setting**
	0000 bin	0001 bin	0001 bin

Index: [0] = Trace 0
[1] = Trace 1

r4725[0...1] Trace, data type 1 traced / Trace rec type 1

CU_S	**Can be changed:** -		**Access level:** 3
	Data type: Unsigned32	**Data set:** -	**Function diagram:** -
	P-Group: Trace and function generator	**Units group:** -	**Unit selection:** -
	Min	**Max**	**Factory setting**
	-	-	-

Index: [0] = Trace 0
[1] = Trace 1

r4726[0...1] Trace, data type 2 traced / Trace rec type 2

CU_S	**Can be changed:** -		**Access level:** 3
	Data type: Unsigned32	**Data set:** -	**Function diagram:** -
	P-Group: Trace and function generator	**Units group:** -	**Unit selection:** -
	Min	**Max**	**Factory setting**
	-	-	-

Index: [0] = Trace 0
[1] = Trace 1

r4727[0...1] Trace, data type 3 traced / Trace rec type 3

CU_S	**Can be changed:** -		**Access level:** 3
	Data type: Unsigned32	**Data set:** -	**Function diagram:** -
	P-Group: Trace and function generator	**Units group:** -	**Unit selection:** -
	Min	**Max**	**Factory setting**
	-	-	-

Index: [0] = Trace 0
[1] = Trace 1

© Siemens AG, 2005. All rights reserved

r4728[0...1] Trace, data type 4 traced / Trace rec type 4

CU_S	**Can be changed:** -		**Access level:** 3
	Data type: Unsigned32	**Data set:** -	**Function diagram:** -
	P-Group: Trace and function generator	**Units group:** -	**Unit selection:** -
	Min	**Max**	**Factory setting**
	-	-	-

Index: [0] = Trace 0
[1] = Trace 1

r4729[0...1] Trace number of recorded values / Trace rec values

CU_S	**Can be changed:** -		**Access level:** 3
	Data type: Unsigned32	**Data set:** -	**Function diagram:** -
	P-Group: Trace and function generator	**Units group:** -	**Unit selection:** -
	Min	**Max**	**Factory setting**
	-	-	-

Description: Displays the number of traced values for each signal.
Index: [0] = Trace 0
[1] = Trace 1
Dependency: Only valid when p4705 = 4.

p4730[0...1] Trace record signal 0 / Trace record sig 0

CU_S	**Can be changed:** U, T		**Access level:** 3
	Data type: Unsigned32	**Data set:** -	**Function diagram:** -
	P-Group: Trace and function generator	**Units group:** -	**Unit selection:** -
	Min	**Max**	**Factory setting**
	-	-	0

Description: Selects the first signal to be traced.
For trace with a physical address (p4780), the data type of the signal to be traced (recorded) is set here.
Index: [0] = Trace 0
[1] = Trace 1

p4731[0...1] Trace record signal 1 / Trace record sig 1

CU_S	**Can be changed:** U, T		**Access level:** 3
	Data type: Unsigned32	**Data set:** -	**Function diagram:** -
	P-Group: Trace and function generator	**Units group:** -	**Unit selection:** -
	Min	**Max**	**Factory setting**
	-	-	0

Description: Selects the second signal to be traced.
For trace with a physical address (p4781), the data type of the signal to be traced (recorded) is set here.
Index: [0] = Trace 0
[1] = Trace 1

© Siemens AG, 2005. All rights reserved

p4732[0...1] Trace record signal 2 / Trace record sig 2

CU_S	**Can be changed:** U, T		**Access level:** 3
	Data type: Unsigned32	**Data set:** -	**Function diagram:** -
	P-Group: Trace and function generator	**Units group:** -	**Unit selection:** -
	Min	**Max**	**Factory setting**
	-	-	0

Description: Selects the third signal to be traced.
For trace with a physical address (p4782), the data type of the signal to be traced (recorded) is set here.

Index: [0] = Trace 0
[1] = Trace 1

p4733[0...1] Trace record signal 3 / Trace record sig 3

CU_S	**Can be changed:** U, T		**Access level:** 3
	Data type: Unsigned32	**Data set:** -	**Function diagram:** -
	P-Group: Trace and function generator	**Units group:** -	**Unit selection:** -
	Min	**Max**	**Factory setting**
	-	-	0

Description: Selects the fourth signal to be traced.
For trace with a physical address (p4783), the data type of the signal to be traced (recorded) is set here.

Index: [0] = Trace 0
[1] = Trace 1

r4740[0...16383] Trace 0 trace buffer signal 0 floating point / Trace 0 trace sig0

CU_S	**Can be changed:** -		**Access level:** 3
	Data type: Floating Point	**Data set:** -	**Function diagram:** -
	P-Group: Trace and function generator	**Units group:** -	**Unit selection:** -
	Min	**Max**	**Factory setting**
	-	-	-

Description: Displays the trace buffer (record buffer) for trace 0 and signal 0.
The trace (record) buffer is sub-divided into memory banks, each containing 500 values. Parameter p4795 can be used to toggle between the individual banks.
Example A:
The first 500 values of signal 0, trace 0 are to be read-out.
In this case, memory bank 0 is set with p4795 = 0. The first 500 values can only be read-out using r4740[0] to r4740[499].
Example B:
The values 750 to 800 from signal 0, trace 0 are to be read-out.
In this case, memory bank 1 is set with p4795 = 1. The values can now be read out in r4740[250] to r4740[299].

Dependency: Refer to: p4795

r4741[0...16383] Trace 0 trace buffer signal 1 floating point / Trace 0 trace sig1

CU_S	**Can be changed:** -		**Access level:** 3
	Data type: Floating Point	**Data set:** -	**Function diagram:** -
	P-Group: Trace and function generator	**Units group:** -	**Unit selection:** -
	Min	**Max**	**Factory setting**
	-	-	-

Description: Displays the trace buffer (record buffer) for trace 0 and signal 1.

Dependency: Refer to: r4740, p4795

© Siemens AG, 2005. All rights reserved

r4742[0...16383] Trace 0 trace buffer signal 2 floating point / Trace 0 trace sig2

CU_S	**Can be changed:** -		**Access level:** 3
	Data type: Floating Point	**Data set:** -	**Function diagram:** -
	P-Group: Trace and function generator	**Units group:** -	**Unit selection:** -
	Min	**Max**	**Factory setting**
	-	-	-

Description: Displays the trace buffer (record buffer) for trace 0 and signal 2.
Dependency: Refer to: r4740, p4795

r4743[0...16383] Trace 0 trace buffer signal 3 floating point / Trace 0 trace sig3

CU_S	**Can be changed:** -		**Access level:** 3
	Data type: Floating Point	**Data set:** -	**Function diagram:** -
	P-Group: Trace and function generator	**Units group:** -	**Unit selection:** -
	Min	**Max**	**Factory setting**
	-	-	-

Description: Displays the trace buffer (record buffer) for trace 0 and signal 3.
Dependency: Refer to: r4740, p4795

r4750[0...16383] Trace 1 trace buffer signal 0 floating point / Trace 1 trace sig0

CU_S	**Can be changed:** -		**Access level:** 3
	Data type: Floating Point	**Data set:** -	**Function diagram:** -
	P-Group: Trace and function generator	**Units group:** -	**Unit selection:** -
	Min	**Max**	**Factory setting**
	-	-	-

Description: Displays the trace buffer (record buffer) for trace 1 and signal 0.
Dependency: Refer to: r4740, p4795

r4751[0...16383] Trace 1 trace buffer signal 1 floating point / Trace 1 trace sig1

CU_S	**Can be changed:** -		**Access level:** 3
	Data type: Floating Point	**Data set:** -	**Function diagram:** -
	P-Group: Trace and function generator	**Units group:** -	**Unit selection:** -
	Min	**Max**	**Factory setting**
	-	-	-

Description: Displays the trace buffer (record buffer) for trace 1 and signal 1.
Dependency: Refer to: r4740, p4795

r4752[0...16383] Trace 1 trace buffer signal 2 floating point / Trace 1 trace sig2

CU_S	**Can be changed:** -		**Access level:** 3
	Data type: Floating Point	**Data set:** -	**Function diagram:** -
	P-Group: Trace and function generator	**Units group:** -	**Unit selection:** -
	Min	**Max**	**Factory setting**
	-	-	-

Description: Displays the trace buffer (record buffer) for trace 1 and signal 2.
Dependency: Refer to: r4740, p4795

© Siemens AG, 2005. All rights reserved

r4753[0...16383] Trace 1 trace buffer signal 3 floating point / Trace 1 trace sig3

CU_S	**Can be changed:** -		**Access level:** 3
	Data type: Floating Point	**Data set:** -	**Function diagram:** -
	P-Group: Trace and function generator	**Units group:** -	**Unit selection:** -
	Min	**Max**	**Factory setting**
	-	-	-

Description: Displays the trace buffer (record buffer) for trace 1 and signal 3.
Dependency: Refer to: r4740, p4795

r4760[0...16383] Trace 0 trace buffer signal 0 / Trace 0 trace sig0

CU_S	**Can be changed:** -		**Access level:** 3
	Data type: Unsigned32	**Data set:** -	**Function diagram:** -
	P-Group: Trace and function generator	**Units group:** -	**Unit selection:** -
	Min	**Max**	**Factory setting**
	-	-	-

r4761[0...16383] Trace 0 trace buffer signal 1 / Trace 0 trace sig1

CU_S	**Can be changed:** -		**Access level:** 3
	Data type: Unsigned32	**Data set:** -	**Function diagram:** -
	P-Group: Trace and function generator	**Units group:** -	**Unit selection:** -
	Min	**Max**	**Factory setting**
	-	-	-

r4762[0...16383] Trace 0 trace buffer signal 2 / Trace 0 trace sig2

CU_S	**Can be changed:** -		**Access level:** 3
	Data type: Unsigned32	**Data set:** -	**Function diagram:** -
	P-Group: Trace and function generator	**Units group:** -	**Unit selection:** -
	Min	**Max**	**Factory setting**
	-	-	-

r4763[0...16383] Trace 0 trace buffer signal 3 / Trace 0 trace sig3

CU_S	**Can be changed:** -		**Access level:** 3
	Data type: Unsigned32	**Data set:** -	**Function diagram:** -
	P-Group: Trace and function generator	**Units group:** -	**Unit selection:** -
	Min	**Max**	**Factory setting**
	-	-	-

p4780[0...1] Trace physical address signal 0 / Trace PhyAddr Sig0

CU_S	**Can be changed:** U, T		**Access level:** 3
	Data type: Unsigned32	**Data set:** -	**Function diagram:** -
	P-Group: Trace and function generator	**Units group:** -	**Unit selection:** -
	Min	**Max**	**Factory setting**
	0000 hex	FFFF FFFF hex	0000 hex

Description: Sets the physical address for the first signal to be traced.
The data type is defined using p4730.
Index: [0] = Trace 0
[1] = Trace 1

© Siemens AG, 2005. All rights reserved

p4781[0...1] Trace physical address signal 1 / Trace PhyAddr Sig1

CU_S	**Can be changed:** U, T		**Access level:** 3
	Data type: Unsigned32	**Data set:** -	**Function diagram:** -
	P-Group: Trace and function generator	**Units group:** -	**Unit selection:** -
	Min	**Max**	**Factory setting**
	0000 hex	FFFF FFFF hex	0000 hex

Description: Sets the physical address for the second signal to be traced.
The data type is defined using p4731.

Index: [0] = Trace 0
[1] = Trace 1

p4782[0...1] Trace physical address signal 2 / Trace PhyAddr Sig2

CU_S	**Can be changed:** U, T		**Access level:** 3
	Data type: Unsigned32	**Data set:** -	**Function diagram:** -
	P-Group: Trace and function generator	**Units group:** -	**Unit selection:** -
	Min	**Max**	**Factory setting**
	0000 hex	FFFF FFFF hex	0000 hex

Description: Sets the physical address for the third signal to be traced.
The data type is defined using p4732.

Index: [0] = Trace 0
[1] = Trace 1

p4783[0...1] Trace physical address signal 3 / Trace PhyAddr Sig3

CU_S	**Can be changed:** U, T		**Access level:** 3
	Data type: Unsigned32	**Data set:** -	**Function diagram:** -
	P-Group: Trace and function generator	**Units group:** -	**Unit selection:** -
	Min	**Max**	**Factory setting**
	0000 hex	FFFF FFFF hex	0000 hex

Description: Sets the physical address for the fourth signal to be traced.
The data type is defined using p4733.

Index: [0] = Trace 0
[1] = Trace 1

p4789[0...1] Trace physical address trigger signal / Trace PhyAddr Trig

CU_S	**Can be changed:** U, T		**Access level:** 3
	Data type: Unsigned32	**Data set:** -	**Function diagram:** -
	P-Group: Trace and function generator	**Units group:** -	**Unit selection:** -
	Min	**Max**	**Factory setting**
	0000 hex	FFFF FFFF hex	0000 hex

Description: Sets the physical address for the trigger signal.
The data type is defined by making the appropriate selection in p4711.

Index: [0] = Trace 0
[1] = Trace 1

© Siemens AG, 2005. All rights reserved

p4795 Trace memory bank changeover / Trace mem changeov

CU_S	**Can be changed:** U, T		**Access level:** 3
	Data type: Unsigned32	**Data set:** -	**Function diagram:** -
	P-Group: Trace and function generator	**Units group:** -	**Unit selection:** -
	Min	**Max**	**Factory setting**
	0	500	0

Description: Changes over the memory bank to read-out the contents of the trace buffer.
Dependency: Refer to: r4740, r4741, r4742, r4743, r4750, r4751, r4752, r4753

r4799 Trace memory location free / Trace mem free

CU_S	**Can be changed:** -		**Access level:** 3
	Data type: Unsigned32	**Data set:** -	**Function diagram:** -
	P-Group: Trace and function generator	**Units group:** -	**Unit selection:** -
	Min	**Max**	**Factory setting**
	-	-	-

Description: Displays the free memory for the trace in bytes.
Dependency: Refer to: r4708

p4800 Function generator control / FG control

CU_S	**Can be changed:** U, T		**Access level:** 3
	Data type: Integer16	**Data set:** -	**Function diagram:** -
	P-Group: Trace and function generator	**Units group:** -	**Unit selection:** -
	Min	**Max**	**Factory setting**
	0	2	0

Description: The function generator is started with p4800 = 1.
The signal is only generated for a 1 signal of BI: p4819.
Values:
0: Stop function generator
1: Start function generator
2: Check function generator parameterization
Dependency: Refer to: p4819

r4805 Function generator status / FG status

CU_S	**Can be changed:** -		**Access level:** 3
	Data type: Integer16	**Data set:** -	**Function diagram:** -
	P-Group: Trace and function generator	**Units group:** -	**Unit selection:** -
	Min	**Max**	**Factory setting**
	-	-	-

Description: Displays the actual status of the function generator.
Values:
0: not active
1: Generate accelerating ramp to offset
2: Generate parameterized signal shape
3: Generate braking ramp
4: Function generator stopped due to missing enable signals
5: Function generator waits for BI: p4819
6: Function generator parameterization has been checked
Dependency: Refer to: p4800, p4819

© Siemens AG, 2005. All rights reserved

r4806 BO: Function generator status signal / FG status signal

CU_S	**Can be changed:** -		**Access level:** 3
	Data type: Unsigned32	**Data set:** -	**Function diagram:** -
	P-Group: Trace and function generator	**Units group:** -	**Unit selection:** -
	Min	**Max**	**Factory setting**
	-	-	-

Description: Displays the status of the function generator.
0 signal: Function generator inactive
1 signal: Function generator running

p4810 Function generator mode / FG operating mode

CU_S	**Can be changed:** U, T		**Access level:** 3
	Data type: Integer16	**Data set:** -	**Function diagram:** -
	P-Group: Trace and function generator	**Units group:** -	**Unit selection:** -
	Min	**Max**	**Factory setting**
	0	99	0

Description: Sets the operating mode of the function generator.
Values:
0: Connection at connector output r4818
1: Connection at current setpoint after filter and r4818
2: Connection as disturbing torque and r4818
3: Connection at speed setpoint after filter and r4818
4: Connection at current setpoint before filter and r4818
5: Connection at speed setpoint before filter and r4818
99: Connection at physical address and r4818

p4812 Function generator physical address / FG phys address

CU_S	**Can be changed:** U, T		**Access level:** 3
	Data type: Unsigned32	**Data set:** -	**Function diagram:** -
	P-Group: Trace and function generator	**Units group:** -	**Unit selection:** -
	Min	**Max**	**Factory setting**
	0	4294967295	0

Description: Sets the physical address where the function generator is to be connected.
Dependency: Only effective when p4810 = 99.

p4813 Function generator physical address reference value / FG phys addr ref

CU_S	**Can be changed:** U, T		**Access level:** 3
	Data type: Floating Point	**Data set:** -	**Function diagram:** -
	P-Group: Trace and function generator	**Units group:** -	**Unit selection:** -
	Min	**Max**	**Factory setting**
	1.00	1000000.00	1.00

Description: Sets the reference value for 100 % for referred inputs.
Dependency: Only effective when p4810 = 99.

© Siemens AG, 2005. All rights reserved

p4815[0...2] Function generator drive number / FG drive number

CU_S	**Can be changed:** U, T		**Access level:** 3
	Data type: Unsigned16	**Data set:** -	**Function diagram:** -
	P-Group: Trace and function generator	**Units group:** -	**Unit selection:** -
	Min	**Max**	**Factory setting**
	0	65535	0

Description: Selects the required drive where the function generator is to be connected.
Index: [0] = First drive for connection
[1] = Second drive for connection
[2] = Third drive for connection
Dependency: Only effective when p4810 = 1, 2, 3, 4 or 5.
Note: For the function generator, only type SERVO drives can be used.

r4818 CO: Function generator output signal / FG output signal

CU_S	**Can be changed:** -		**Access level:** 3
	Data type: Floating Point	**Data set:** -	**Function diagram:** -
	P-Group: Trace and function generator	**Units group:** PERCENT	**Unit selection:** -
	Min	**Max**	**Factory setting**
	- [%]	- [%]	- [%]

Description: Displays the output signal for the function generator.
Dependency: Refer to: p4810
Note: The value is displayed independently of the function generator mode.
The signal is available as connector output for an ongoing interconnection.

p4819 BI: Function generator control / FG control

CU_S	**Can be changed:** U, T		**Access level:** 3
	Data type: Unsigned32	**Data set:** -	**Function diagram:** -
	P-Group: Trace and function generator	**Units group:** -	**Unit selection:** -
	Min	**Max**	**Factory setting**
	-	-	1

Description: Sets the signal source to control the function generator.
When the function generator is running, the 0 signal from BI: p4819 is used to stop the signal generation and p4800 is set to 0.
Dependency: Refer to: p4800

p4820 Function generator signal shape / FG signal shape

CU_S	**Can be changed:** U, T		**Access level:** 3
	Data type: Integer16	**Data set:** -	**Function diagram:** -
	P-Group: Trace and function generator	**Units group:** -	**Unit selection:** -
	Min	**Max**	**Factory setting**
	1	5	1

Description: Sets the signal to be generated for the function generator.
Values:
1: Square-wave
2: Staircase
3: Triangular
4: Binary noise - PRBS (Pseudo Random Binary Signal)
5: Sinusoidal

© Siemens AG, 2005. All rights reserved

p4821 Function generator period / FG period duration

CU_S	**Can be changed:** U, T		**Access level:** 3
	Data type: Floating Point	**Data set:** -	**Function diagram:** -
	P-Group: Trace and function generator	**Units group:** TIME_M3	**Unit selection:** -
	Min	**Max**	**Factory setting**
	0.00 [ms]	60000.00 [ms]	1000.00 [ms]

Description: Sets the period of the signal to be generated for the function generator.
Dependency: Ineffective when p4820 = 4 (PRBS).

p4822 Function generator pulse width / FG pulse width

CU_S	**Can be changed:** U, T		**Access level:** 3
	Data type: Floating Point	**Data set:** -	**Function diagram:** -
	P-Group: Trace and function generator	**Units group:** TIME_M3	**Unit selection:** -
	Min	**Max**	**Factory setting**
	0.00 [ms]	60000.00 [ms]	500.00 [ms]

Description: Sets the pulse width for the signal to be generated for the function generator.
Dependency: Only effective when p4820 = 1 (square-wave).

p4823 Function generator bandwidth / FG bandwith

CU_S	**Can be changed:** U, T		**Access level:** 3
	Data type: Floating Point	**Data set:** -	**Function diagram:** -
	P-Group: Trace and function generator	**Units group:** FREQUENCY	**Unit selection:** -
	Min	**Max**	**Factory setting**
	0.00 [Hz]	16000.00 [Hz]	4000.00 [Hz]

Description: Sets the bandwidth for the signal to be generated for the function generator.
Dependency: Only effective when p4820 = 4 (PRBS).
Refer to: p4830
Refer to: A02041

p4824 Function generator amplitude / FG amplitude

CU_S	**Can be changed:** U, T		**Access level:** 3
	Data type: Floating Point	**Data set:** -	**Function diagram:** -
	P-Group: Trace and function generator	**Units group:** PERCENT	**Unit selection:** -
	Min	**Max**	**Factory setting**
	-1600.00 [%]	1600.00 [%]	5.00 [%]

Description: Sets the amplitude for the signal to be generated for the function generator.
Dependency: Units are dependent on p4810.
If p4810 = 1, 2, 4: the amplitude is referred to p2002 (rated motor current).
If p4810 = 3, 5: the amplitude is referred to p2000 (rated motor speed).

© Siemens AG, 2005. All rights reserved

p4825 Function generator 2nd amplitude / FG 2nd amplitude

CU_S	**Can be changed:** U, T		**Access level:** 3
	Data type: Floating Point	**Data set:** -	**Function diagram:** -
	P-Group: Trace and function generator	**Units group:** PERCENT	**Unit selection:** -
	Min	**Max**	**Factory setting**
	-1600.00 [%]	1600.00 [%]	7.00 [%]

Description: Sets the second amplitude for the signal to be generated for the function generator.

Dependency: Only effective for p4820 = 2 (staircase).
Units are dependent on p4810.
If p4810 = 1, 2, 4: the amplitude is referred to p2002 (rated motor current).
If p4810 = 3, 5: the amplitude is referred to p2000 (rated motor speed).

p4826 Function generator offset / FG offset

CU_S	**Can be changed:** U, T		**Access level:** 3
	Data type: Floating Point	**Data set:** -	**Function diagram:** -
	P-Group: Trace and function generator	**Units group:** PERCENT	**Unit selection:** -
	Min	**Max**	**Factory setting**
	-1600.00 [%]	1600.00 [%]	0.00 [%]

Description: Sets the offset (DC component) of the signal to be generated for the function generator.

Dependency: Units are dependent on p4810.
If p4810 = 1, 2, 4: the offset is referred to p2002 (rated motor current).
If p4810 = 3, 5: the offset is referred to p2000 (rated motor speed).
If p4810 = 2: in order to avoid effects of play (backlash), the offset does not act on the current setpoint, but instead on the speed setpoint.

p4827 Function generator ramp-up time to offset / FG ramp-up offset

CU_S	**Can be changed:** U, T		**Access level:** 3
	Data type: Floating Point	**Data set:** -	**Function diagram:** -
	P-Group: Trace and function generator	**Units group:** TIME_M3	**Unit selection:** -
	Min	**Max**	**Factory setting**
	0.00 [ms]	100000.00 [ms]	32.00 [ms]

Description: Sets the ramp-up time to the offset for the function generator.

p4828 Function generator lower limit / FG lower limit

CU_S	**Can be changed:** U, T		**Access level:** 3
	Data type: Floating Point	**Data set:** -	**Function diagram:** -
	P-Group: Trace and function generator	**Units group:** PERCENT	**Unit selection:** -
	Min	**Max**	**Factory setting**
	-10000.00 [%]	0.00 [%]	-100.00 [%]

Description: Sets the lower limit for the function generator.

Dependency: For p4810 = 2 the limit only applies to the current setpoint, but not the speed setpoint (offset).

© Siemens AG, 2005. All rights reserved

p4829 Function generator upper limit / FG upper limit

CU_S	**Can be changed:** U, T		**Access level:** 3
	Data type: Floating Point	**Data set:** -	**Function diagram:** -
	P-Group: Trace and function generator	**Units group:** PERCENT	**Unit selection:** -
	Min	**Max**	**Factory setting**
	0.00 [%]	10000.00 [%]	100.00 [%]

Description: Sets the upper limit for the function generator.

Dependency: For p4810 = 2 the limit only applies to the current setpoint, but not the speed setpoint (offset).

p4830 Function generator time slice cycle / FG time slice

CU_S	**Can be changed:** U, T		**Access level:** 3
	Data type: Floating Point	**Data set:** -	**Function diagram:** -
	P-Group: Trace and function generator	**Units group:** TIME_M3	**Unit selection:** -
	Min	**Max**	**Factory setting**
	0.03125 [ms]	2.00000 [ms]	0.12500 [ms]

Description: Sets the time slice cycle in which the function generator is called.

p4831 Function generator amplitude scaling / FG amplitude scal

CU_S	**Can be changed:** U, T		**Access level:** 3
	Data type: Floating Point	**Data set:** -	**Function diagram:** -
	P-Group: Trace and function generator	**Units group:** PERCENT	**Unit selection:** -
	Min	**Max**	**Factory setting**
	0.00000 [%]	200.00000 [%]	100.00000 [%]

Description: Sets the scaling for the amplitude of the signal waveforms for all output channels.
The value can be changed while the function generator is running.

p4832[0...2] Function generator amplitude scaling / FG amplitude scal

CU_S	**Can be changed:** U, T		**Access level:** 3
	Data type: Floating Point	**Data set:** -	**Function diagram:** -
	P-Group: Trace and function generator	**Units group:** PERCENT	**Unit selection:** -
	Min	**Max**	**Factory setting**
	-340.28235E36 [%]	340.28235E36 [%]	100.00000 [%]

Description: Sets the scaling for the amplitude of the signal waveforms separately for each output channel.
The value cannot be changed while the function generator is running.

Index: [0] = First drive for connection
[1] = Second drive for connection
[2] = Third drive for connection

p4833[0...2] Function generator offset scaling / FG offset scal

CU_S	**Can be changed:** U, T		**Access level:** 3
	Data type: Floating Point	**Data set:** -	**Function diagram:** -
	P-Group: Trace and function generator	**Units group:** PERCENT	**Unit selection:** -
	Min	**Max**	**Factory setting**
	-340.28235E36 [%]	340.28235E36 [%]	100.00000 [%]

Description: Sets the scaling for the offset of the signal waveforms separately for each output channel.
The value cannot be changed while the function generator is running.

Index: [0] = First drive for connection
[1] = Second drive for connection
[2] = Third drive for connection

© Siemens AG, 2005. All rights reserved

r4899 Status word sequence control / ZSW seq ctrl

TM41

Can be changed: -
Access level: 2
Data type: Unsigned16
Data set: -
Function diagram: -
P-Group: Displays, signals
Units group: -
Unit selection: -

Min	Max	Factory setting
-	-	-

Description: Displays the status word of the sequence control from terminal module 41 (TM41).

Bit field:

Bit	Signal name	0 signal	1 signal	FP
00	Ready to power up	No	Yes	-
01	Ready	No	Yes	-
02	Operation enabled	No	Yes	-
03	Fault present	No	Yes	-
04	Coast down active	Yes	No	-
05	Fast stop active	Yes	No	-
06	Power-on inhibit	No	Yes	-
07	Alarm present	No	Yes	-
09	Control from PLC	No	Yes	-
14	Motor rotates forwards	No	Yes	-

p6651 BI: Test mode, signal source ON/OFF / Test s_src ON/OFF

A_INF, B_INF, SERVO, S_INF, VECTOR

Can be changed: T
Access level: 3
Data type: Unsigned32
Data set: -
Function diagram: -
P-Group: Commands
Units group: -
Unit selection: -

Min	Max	Factory setting
-	-	0

Description: Sets the signal source to switch-in/switch-out the test.
The test mode is set using p6650.

r7000 Par_circuit No. of active power modules / No. active PM

A_INF (Parallel), B_INF (Parallel), S_INF (Parallel), VECTOR (Parallel)

Can be changed: -
Access level: 3
Data type: Unsigned16
Data set: -
Function diagram: -
P-Group: Modulation
Units group: -
Unit selection: -

Min	Max	Factory setting
-	-	-

Description: Displays the active power modules for a parallel circuit configuration.
Dependency: Refer to: p7001

p7001[0...n] Par_circuit enable power modules / Enable PM

A_INF (Parallel), B_INF (Parallel), S_INF (Parallel), VECTOR (Parallel)

Can be changed: T
Access level: 3
Data type: Integer16
Data set: PDS
Function diagram: -
P-Group: Modulation
Units group: -
Unit selection: -

Min	Max	Factory setting
0	1	1

Description: Enables the power modules in the parallel circuit configuration.
Values:
0: Deactivated
1: Activated
Dependency: Refer to: r7000

© Siemens AG, 2005. All rights reserved

r7002[0...n] Par_circuit status power modules / Status PM

A_INF (Parallel), B_INF (Parallel), S_INF (Parallel), VECTOR (Parallel)

Can be changed: -		**Access level:** 3
Data type: Integer16	**Data set:** PDS	**Function diagram:** -
P-Group: Modulation	**Units group:** -	**Unit selection:** -
Min	**Max**	**Factory setting**
-	-	-

Description: Displays the status of the power modules in the parallel circuit configuration.

Values:
0: Pulses inhibited
1: Pulses enabled

Dependency: Refer to: r7000, p7001

p7003 Par_circuit winding system / Winding system

VECTOR (Parallel)

Can be changed: C2(2)		**Access level:** 3
Data type: Integer16	**Data set:** -	**Function diagram:** -
P-Group: Converter	**Units group:** -	**Unit selection:** -
Min	**Max**	**Factory setting**
0	1	0

Description: Specifies the winding system for a parallel circuit configuration.
The following limitations/restrictions are obtained depending on the setting:
One winding system (p7003 = 0):
- the motor data identification routine (p1910) determines the stator resistance and the cable resistance.
- the current balancing is activated as standard after the motor data identification routine (p7035 = 1).
- individual Motor Modules can be activated and de-activated (p7001).
- the edge modulation is not possible (p1802).

Several separate winding systems or motors (p7003 = 1):
- the motor data identification routine (p1910) determines the total (overall) resistance.
- the current balancing is de-activated as standard (p7035 = 0).
- all Motor Modules are activated. It is not possible to de-activate a motor model.
- the edge modulation can be activated (p1802).

Values:
0: One winding system
1: Several separate winding systems or motors

p7010 Par_circuit current dissymmetry alarm threshold / i_dissym A thresh

A_INF (Parallel), S_INF (Parallel), VECTOR (Parallel)

Can be changed: U, T		**Access level:** 3
Data type: Floating Point	**Data set:** -	**Function diagram:** -
P-Group: Modulation	**Units group:** PERCENT	**Unit selection:** -
Min	**Max**	**Factory setting**
2 [%]	100 [%]	20 [%]

Description: Sets the alarm threshold to detect current dissymmetry in the parallel circuit configuration.
The deviation between the measured values and average value is evaluated. The specified value is referred to the rated power module current (p7251[0]).

Dependency: Refer to: r7251
Refer to: A05052

© Siemens AG, 2005. All rights reserved

p7011 Par_circuit DC link voltage dissymmetry, alarm threshold / Vdc_dissym A thrsh

A_INF (Parallel), B_INF (Parallel), S_INF (Parallel), VECTOR (Parallel)

Can be changed: U, T		**Access level:** 3
Data type: Floating Point	**Data set:** -	**Function diagram:** -
P-Group: Modulation	**Units group:** PERCENT	**Unit selection:** -
Min	**Max**	**Factory setting**
2 [%]	100 [%]	10 [%]

Description: Sets the alarm threshold to detect dissymmetry of the DC link voltages in the parallel circuit configuration.
The deviation between the measured values and average value is evaluated. The specified value is referred to the rated link voltage.

Dependency: Refer to: A05053

r7020[0...n] Par_circuit deviation current in phase U / Phase U curr dev

A_INF (Parallel), S_INF (Parallel), VECTOR (Parallel)

Can be changed: -		**Access level:** 3
Data type: Floating Point	**Data set:** PDS	**Function diagram:** -
P-Group: Displays, signals	**Units group:** CURRENT_AC_PP	**Unit selection:** -
Min	**Max**	**Factory setting**
- [A]	- [A]	- [A]

Description: Displays the deviation between the measured current actual value of phase U and the average value as peak value.
The maximum deviation from the average value is displayed in r7025.

Dependency: Refer to: r7021, r7022, r7025

r7021[0...n] Par_circuit deviation current in phase V / Phase V curr dev

A_INF (Parallel), S_INF (Parallel), VECTOR (Parallel)

Can be changed: -		**Access level:** 3
Data type: Floating Point	**Data set:** PDS	**Function diagram:** -
P-Group: Displays, signals	**Units group:** CURRENT_AC_PP	**Unit selection:** -
Min	**Max**	**Factory setting**
- [A]	- [A]	- [A]

Description: Displays the deviation between the measured current actual value of phase V and the average value as peak value.
The maximum deviation from the average value is displayed in r7026.

Dependency: Refer to: r7020, r7022, r7026

r7022[0...n] Par_circuit deviation current in phase W / Phase W curr dev

A_INF (Parallel), S_INF (Parallel), VECTOR (Parallel)

Can be changed: -		**Access level:** 3
Data type: Floating Point	**Data set:** PDS	**Function diagram:** -
P-Group: Displays, signals	**Units group:** CURRENT_AC_PP	**Unit selection:** -
Min	**Max**	**Factory setting**
- [A]	- [A]	- [A]

Description: Displays the deviation between the measured current actual value of phase W and the average value as peak value.
The maximum deviation from the average value is displayed in r7027.

Dependency: Refer to: r7020, r7021, r7027

© Siemens AG, 2005. All rights reserved

r7025 Par_circuit max. deviation currents phase U / Phase U Max i_dev

A_INF (Parallel), S_INF (Parallel), VECTOR (Parallel)

Can be changed: -		**Access level:** 3
Data type: Floating Point	**Data set:** -	**Function diagram:** -
P-Group: Displays, signals	**Units group:** CURRENT_AC_PP	**Unit selection:** -
Min	**Max**	**Factory setting**
- [A]	- [A]	- [A]

Description: Displays the maximum absolute deviation of the measured current actual values of phase U from the average value as peak value.
The deviation of the individual currents from the average value is displayed in r7020.

Dependency: Refer to: r7020, r7026, r7027
Refer to: A05052

r7026 Par_circuit max. deviation currents phase V / Phase V Max i_dev

A_INF (Parallel), S_INF (Parallel), VECTOR (Parallel)

Can be changed: -		**Access level:** 3
Data type: Floating Point	**Data set:** -	**Function diagram:** -
P-Group: Displays, signals	**Units group:** CURRENT_AC_PP	**Unit selection:** -
Min	**Max**	**Factory setting**
- [A]	- [A]	- [A]

Description: Displays the maximum absolute deviation of the measured current actual values of phase V from the average value as peak value.
The deviation of the individual currents from the average value is displayed in r7021.

Dependency: Refer to: r7021, r7025, r7027
Refer to: A05052

r7027 Par_circuit max. deviation currents phase W / Phase W Max i_dev

A_INF (Parallel), S_INF (Parallel), VECTOR (Parallel)

Can be changed: -		**Access level:** 3
Data type: Floating Point	**Data set:** -	**Function diagram:** -
P-Group: Displays, signals	**Units group:** CURRENT_AC_PP	**Unit selection:** -
Min	**Max**	**Factory setting**
- [A]	- [A]	- [A]

Description: Displays the maximum absolute deviation of the measured current actual values of phase W from the average value as peak value.
The deviation of the individual currents from the average value is displayed in r7022.

Dependency: Refer to: r7022, r7025, r7026
Refer to: A05052

r7030[0...n] Par_circuit deviation DC link voltage / Vdc deviation

A_INF (Parallel), B_INF (Parallel), S_INF (Parallel), VECTOR (Parallel)

Can be changed: -		**Access level:** 3
Data type: Floating Point	**Data set:** PDS	**Function diagram:** -
P-Group: Displays, signals	**Units group:** VOLTAGE_DC	**Unit selection:** -
Min	**Max**	**Factory setting**
- [V]	- [V]	- [V]

Description: Displays the deviation of the measured DC link voltage from the average value.
The maximum deviation from the average value is displayed in r7031.

Dependency: Refer to: r7031

© Siemens AG, 2005. All rights reserved

r7031 Par_circuit max. deviation, DC link voltage / Vdc max deviation

A_INF (Parallel), B_INF (Parallel), S_INF (Parallel), VECTOR (Parallel)

Can be changed: -
Access level: 3
Data type: Floating Point
Data set: -
Function diagram: -
P-Group: Displays, signals
Units group: VOLTAGE_DC
Unit selection: -

Min	Max	Factory setting
- [V]	- [V]	- [V]

Description: Displays the maximum absolute deviation of the measured DC link voltage from the average value.
The deviation of the individual voltages from the average value is displayed in r7030.

Dependency: Refer to: r7030
Refer to: A05053

p7035 Infeed par_circuit circulating current control, operating mode / Circ_I mode

A_INF (Parallel), S_INF (Parallel)

Can be changed: U, T
Access level: 3
Data type: Integer16
Data set: -
Function diagram: -
P-Group: Modulation
Units group: -
Unit selection: -

Min	Max	Factory setting
0	1	1

Description: Sets the operating mode of the circulating current control.
The circulating current control ensures symmetrical distribution of the total currents to the individual converters.

Values:
0: Circulating current control de-activated
1: Circulating control control activated

p7035[0...n] Par_circuit circulating current control, operating mode / Circ_I mode

VECTOR (Parallel)

Can be changed: U, T
Access level: 3
Data type: Integer16
Data set: DDS
Function diagram: -
P-Group: Modulation
Units group: -
Unit selection: -

Min	Max	Factory setting
0	1	1

Description: Sets the operating mode of the circulating current control.
The circulating current control ensures symmetrical distribution of the total currents to the individual converters.

Values:
0: Circulating current control de-activated
1: Circulating control control activated

p7036 Infeed par_cct circulating current controller, proportional gain / Circ_I Kp

A_INF (Parallel), S_INF (Parallel)

Can be changed: U, T
Access level: 3
Data type: Floating Point
Data set: -
Function diagram: -
P-Group: Modulation
Units group: PERCENT
Unit selection: -

Min	Max	Factory setting
0.00000 [%]	1000.00000 [%]	100.00000 [%]

Description: Sets the normalized proportional gain for the circulating current controller.

Note: A value of 100 % corresponds to the basic setting derived from loop control parameters (p3421, p3622).

© Siemens AG, 2005. All rights reserved

p7036[0...n] Par_circuit circulating current control, proportional gain / Circ_I Kp

VECTOR (Parallel)

Can be changed: U, T		**Access level:** 3
Data type: Floating Point	**Data set:** DDS	**Function diagram:** -
P-Group: Modulation	**Units group:** RESISTANCE	**Unit selection:** -
Min	**Max**	**Factory setting**
0.00000 [Ohm]	20.00000 [Ohm]	0.00000 [Ohm]

Description: Sets the proportional gain for the circulating current controller.
The parameter is pre-set to the cable resistance.

p7037 Infeed par_cct circulating current control, integral action time / Circ_I TN

A_INF (Parallel), S_INF (Parallel)

Can be changed: U, T		**Access level:** 3
Data type: Floating Point	**Data set:** -	**Function diagram:** -
P-Group: Modulation	**Units group:** PERCENT	**Unit selection:** -
Min	**Max**	**Factory setting**
0.0 [%]	100000.0 [%]	100.0 [%]

Description: Sets the normalized integral action time of the circulating current controller.
Note: A value of 100 % corresponds to the basic setting derived from the controller sampling time p0115[0].
The integral component of the controller is de-activated with p7037 = 0.

p7037[0...n] Par_circuit circulating current control, integral action time / Circ_I TN

VECTOR (Parallel)

Can be changed: U, T		**Access level:** 3
Data type: Floating Point	**Data set:** DDS	**Function diagram:** -
P-Group: Modulation	**Units group:** -	**Unit selection:** -
Min	**Max**	**Factory setting**
2.0	1000.0	4.0

Description: Sets the integral action time of the circulating current controller.
The parameter is referred to the current controller sampling time p0115[0].
Dependency: Refer to: p0115

p7038 Infeed par_circuit circulating current control, limit / Circ_I limit

A_INF (Parallel), S_INF (Parallel)

Can be changed: U, T		**Access level:** 3
Data type: Floating Point	**Data set:** -	**Function diagram:** -
P-Group: Modulation	**Units group:** PERCENT	**Unit selection:** -
Min	**Max**	**Factory setting**
1 [%]	100 [%]	100 [%]

Description: Sets the limit of the circulating current controller output values.
The parameter is, depending on the phase, referred to the valve lockout times p1828, p1829 or p1830.

p7038[0...n] Par_circuit circulating current control, limit / Circ_I limit

VECTOR (Parallel)

Can be changed: U, T		**Access level:** 3
Data type: Floating Point	**Data set:** DDS	**Function diagram:** -
P-Group: Modulation	**Units group:** PERCENT	**Unit selection:** -
Min	**Max**	**Factory setting**
1 [%]	100 [%]	50 [%]

Description: Sets the limit of the circulating current controller output values.
The parameter is, depending on the phase, referred to the valve lockout times p1828, p1829 or p1830.

© Siemens AG, 2005. All rights reserved

p7040[0...n] Par_circuit correction, valve lockout time phase U / Comp t_lockout U

A_INF (Parallel), S_INF (Parallel), VECTOR (Parallel)

Can be changed: U, T		**Access level:** 4
Data type: Floating Point	**Data set:** PDS	**Function diagram:** -
P-Group: Modulation	**Units group:** TIME_M6	**Unit selection:** -
Min	**Max**	**Factory setting**
0.00 [µs]	1000000.00 [µs]	0.00 [µs]

Description: For the particular Motor Module, the correction time must be added to the valve lockout time to be compensated for phase U (p1828).
The correction value is used to compensate variations/spread in the valve lockout times of Motor Modules for a parallel circuit configuration.

Dependency: Refer to: p1828

p7042[0...n] Par_circuit correction, valve lockout time phase V / Comp t_lockout V

A_INF (Parallel), S_INF (Parallel), VECTOR (Parallel)

Can be changed: U, T		**Access level:** 4
Data type: Floating Point	**Data set:** PDS	**Function diagram:** -
P-Group: Modulation	**Units group:** TIME_M6	**Unit selection:** -
Min	**Max**	**Factory setting**
0.00 [µs]	1000000.00 [µs]	0.00 [µs]

Description: For the particular Motor Module, the correction time must be added to the valve lockout time to be compensated for phase V (p1829).
The correction value is used to compensate variations/spread in the valve lockout times of Motor Modules for a parallel circuit configuration.

Dependency: Refer to: p1829

p7044[0...n] Par_circuit correction, valve lockout time phase W / Comp t_lockout W

A_INF (Parallel), S_INF (Parallel), VECTOR (Parallel)

Can be changed: U, T		**Access level:** 4
Data type: Floating Point	**Data set:** PDS	**Function diagram:** -
P-Group: Modulation	**Units group:** TIME_M6	**Unit selection:** -
Min	**Max**	**Factory setting**
0.00 [µs]	1000000.00 [µs]	0.00 [µs]

Description: For the particular Motor Module, the correction time must be added to the valve lockout time to be compensated for phase W (p1830).
The correction value is used to compensate variations/spread in the valve lockout times of Motor Modules for a parallel circuit configuration.

Dependency: Refer to: p1830

r7050[0...n] Par_circuit circulating current phase U / Circ_I_phase U

A_INF (Parallel), S_INF (Parallel), VECTOR (Parallel)

Can be changed: -		**Access level:** 3
Data type: Floating Point	**Data set:** PDS	**Function diagram:** -
P-Group: Displays, signals	**Units group:** CURRENT_AC_PP	**Unit selection:** -
Min	**Max**	**Factory setting**
- [A]	- [A]	- [A]

Description: Displays the circulating current of phase U as peak value.

© Siemens AG, 2005. All rights reserved

r7051[0...n] Par_circuit circulating current phase V / Circ_I_phase V

A_INF (Parallel), S_INF (Parallel), VECTOR (Parallel)

Can be changed: -		**Access level:** 3
Data type: Floating Point	**Data set:** PDS	**Function diagram:** -
P-Group: Displays, signals	**Units group:** CURRENT_AC_PP	**Unit selection:** -
Min	**Max**	**Factory setting**
- [A]	- [A]	- [A]

Description: Displays the circulating current of phase V as peak value.

r7052[0...n] Par_circuit circulating current phase W / Circ_I_phase W

A_INF (Parallel), S_INF (Parallel), VECTOR (Parallel)

Can be changed: -		**Access level:** 3
Data type: Floating Point	**Data set:** PDS	**Function diagram:** -
P-Group: Displays, signals	**Units group:** CURRENT_AC_PP	**Unit selection:** -
Min	**Max**	**Factory setting**
- [A]	- [A]	- [A]

Description: Displays the circulating current of phase W as peak value.

r7100[0...99] Par_circuit ring buffer fault/alarm code / Fault/alarm code

A_INF (Parallel), B_INF (Parallel), S_INF (Parallel), VECTOR (Parallel)

Can be changed: -		**Access level:** 3
Data type: Unsigned32	**Data set:** -	**Function diagram:** -
P-Group: Displays, signals	**Units group:** -	**Unit selection:** -
Min	**Max**	**Factory setting**
-	-	-

Description: Ring buffer for faults and alarms that have occurred from power modules connected in parallel (Motor Module, Active Line Infeed, Voltage Sensing Module).
Displays the fault/alarm code.

Dependency: Refer to: r7101, r7102, r7103

Note: The last fault case that occurred is documented in index 0.
The parameter is reset to 0 at POWER ON.

r7101[0...99] Par_circuit ring buffer data set number / Ring buffer Ds_No.

A_INF (Parallel), B_INF (Parallel), S_INF (Parallel), VECTOR (Parallel)

Can be changed: -		**Access level:** 3
Data type: Unsigned32	**Data set:** -	**Function diagram:** -
P-Group: Displays, signals	**Units group:** -	**Unit selection:** -
Min	**Max**	**Factory setting**
-	-	-

Description: Ring buffer for faults and alarms that have occurred from power modules connected in parallel (Motor Module, Active Line Infeed, Voltage Sensing Module).
p7101 < 100:
Displays the Power Module Data Set number (PDS).
p7101 >= 100:
Displays the Voltage Sensing Module Data Set number (VSMDS)

Dependency: Refer to: r7100, r7102, r7103

Note: The last fault case that occurred is documented in index 0.
The parameter is reset to 0 at POWER ON.

© Siemens AG, 2005. All rights reserved

r7102[0...99] Par_circuit ring buffer fault/alarm received / F/A received

A_INF (Parallel), B_INF (Parallel), S_INF (Parallel), VECTOR (Parallel)

Can be changed: -		**Access level:** 3
Data type: Unsigned32	**Data set:** -	**Function diagram:** -
P-Group: Displays, signals	**Units group:** -	**Unit selection:** -
Min	**Max**	**Factory setting**
-	-	-

Description: Ring buffer for faults and alarms that have occurred from power modules connected in parallel (Motor Module, Active Line Infeed, Voltage Sensing Module).
Displays the relative system runtime when the fault or alarm occurred.

Dependency: Refer to: r7100, r7101, r7103

Note: The last fault case that occurred is documented in index 0.
The parameter is reset to 0 at POWER ON.

r7103[0...99] Par_circuit ring buffer fault/alarm gone / F/A gone

A_INF (Parallel), B_INF (Parallel), S_INF (Parallel), VECTOR (Parallel)

Can be changed: -		**Access level:** 3
Data type: Unsigned32	**Data set:** -	**Function diagram:** -
P-Group: Displays, signals	**Units group:** -	**Unit selection:** -
Min	**Max**	**Factory setting**
-	-	-

Description: Ring buffer for faults and alarms that have occurred from power modules connected in parallel (Motor Module, Active Line Infeed, Voltage Sensing Module).
Displays the relative system runtime when the fault or alarm was withdrawn.

Dependency: Refer to: r7100, r7101, r7102

Note: The last fault case that occurred is documented in index 0.
The parameter is reset to 0 at POWER ON.

r7200[0...n] Par_circuit power module overload I2T / PM overload I2T

A_INF (Parallel), S_INF (Parallel), VECTOR (Parallel)

Can be changed: -		**Access level:** 3
Data type: Floating Point	**Data set:** PDS	**Function diagram:** -
P-Group: Displays, signals	**Units group:** PERCENT	**Unit selection:** -
Min	**Max**	**Factory setting**
- [%]	- [%]	- [%]

Description: Displays the overload of the particular power module in a parallel circuit configuration calculated using the I2t function.
The maximum value of all power modules is displayed in r0036.

r7201[0...n] Par_circuit power module temperatures max. inverter / PM temp max inv

A_INF (Parallel), B_INF (Parallel), S_INF (Parallel), VECTOR (Parallel)

Can be changed: -		**Access level:** 3
Data type: Floating Point	**Data set:** PDS	**Function diagram:** -
P-Group: Displays, signals	**Units group:** TEMPERATURE	**Unit selection:** -
Min	**Max**	**Factory setting**
- [°C]	- [°C]	- [°C]

Description: Displays the maximum inverter temperature in the power module for a parallel circuit configuration.
The maximum value of all power modules is displayed in r0037[0].

© Siemens AG, 2005. All rights reserved

r7202[0...n] Par_circuit power module temperatures max. depletion layer / PM TempMaxDepLayer

A_INF (Parallel), B_INF (Parallel), S_INF (Parallel), VECTOR (Parallel)

Can be changed: - **Access level:** 3
Data type: Floating Point **Data set:** PDS **Function diagram:** -
P-Group: Displays, signals **Units group:** TEMPERATURE **Unit selection:** -

Min	Max	Factory setting
- [°C]	- [°C]	- [°C]

Description: Displays the maximum depletion layer temperature in the power module for a parallel circuit configuration.
The maximum value of all power modules is displayed in r0037[1].

r7203[0...n] Par_circuit power module temperatures max. rectifier / PM temp max rect

A_INF (Parallel), B_INF (Parallel), S_INF (Parallel), VECTOR (Parallel)

Can be changed: - **Access level:** 3
Data type: Floating Point **Data set:** PDS **Function diagram:** -
P-Group: Displays, signals **Units group:** TEMPERATURE **Unit selection:** -

Min	Max	Factory setting
- [°C]	- [°C]	- [°C]

Description: Displays the maximum rectifier temperature in the power module for a parallel circuit configuration.
The maximum value of all power modules is displayed in r0037[2].

r7204[0...n] Par_circuit power module temperatures air intake / PM temp air intake

A_INF (Parallel), B_INF (Parallel), S_INF (Parallel), VECTOR (Parallel)

Can be changed: - **Access level:** 3
Data type: Floating Point **Data set:** PDS **Function diagram:** -
P-Group: Displays, signals **Units group:** TEMPERATURE **Unit selection:** -

Min	Max	Factory setting
- [°C]	- [°C]	- [°C]

Description: Displays the air intake temperature in the power module for a parallel circuit configuration.
The maximum value of all power modules is displayed in r0037[3].

r7205[0...n] Par_circuit power module temperatures electronics / PM temp electr

A_INF (Parallel), B_INF (Parallel), S_INF (Parallel), VECTOR (Parallel)

Can be changed: - **Access level:** 3
Data type: Floating Point **Data set:** PDS **Function diagram:** -
P-Group: Displays, signals **Units group:** TEMPERATURE **Unit selection:** -

Min	Max	Factory setting
- [°C]	- [°C]	- [°C]

Description: Displays the temperature of the electronics module in the power module for a parallel circuit configuration.
The maximum value of all power modules is displayed in r0037[4].

r7206[0...n] Par_circuit power module temperatures inverter 1 / PM temp inv 1

A_INF (Parallel), B_INF (Parallel), S_INF (Parallel), VECTOR (Parallel)

Can be changed: - **Access level:** 3
Data type: Floating Point **Data set:** PDS **Function diagram:** -
P-Group: Displays, signals **Units group:** TEMPERATURE **Unit selection:** -

Min	Max	Factory setting
- [°C]	- [°C]	- [°C]

Description: Displays the inverter temperature 1 in the power module for a parallel circuit configuration.
The maximum value of all power modules is displayed in r0037[5].

© Siemens AG, 2005. All rights reserved

r7207[0...n] Par_circuit power module temperatures inverter 2 / PM temp inv 2

A_INF (Parallel), B_INF (Parallel), S_INF (Parallel), VECTOR (Parallel)

Can be changed: - **Access level:** 3
Data type: Floating Point **Data set:** PDS **Function diagram:** -
P-Group: Displays, signals **Units group:** TEMPERATURE **Unit selection:** -

Min	Max	Factory setting
- [°C]	- [°C]	- [°C]

Description: Displays the inverter temperature 2 in the power module for a parallel circuit configuration.
The maximum value of all power modules is displayed in r0037[6].

r7208[0...n] Par_circuit power module temperatures inverter 3 / PM temp inv 3

A_INF (Parallel), B_INF (Parallel), S_INF (Parallel), VECTOR (Parallel)

Can be changed: - **Access level:** 3
Data type: Floating Point **Data set:** PDS **Function diagram:** -
P-Group: Displays, signals **Units group:** TEMPERATURE **Unit selection:** -

Min	Max	Factory setting
- [°C]	- [°C]	- [°C]

Description: Displays the inverter temperature 3 in the power module for a parallel circuit configuration.
The maximum value of all power modules is displayed in r0037[7].

r7209[0...n] Par_circuit power module temperatures inverter 4 / PM temp inv 4

A_INF (Parallel), B_INF (Parallel), S_INF (Parallel), VECTOR (Parallel)

Can be changed: - **Access level:** 3
Data type: Floating Point **Data set:** PDS **Function diagram:** -
P-Group: Displays, signals **Units group:** TEMPERATURE **Unit selection:** -

Min	Max	Factory setting
- [°C]	- [°C]	- [°C]

Description: Displays the inverter temperature 4 in the power module for a parallel circuit configuration.
The maximum value of all power modules is displayed in r0037[8].

r7210[0...n] Par_circuit power module temperatures inverter 5 / PM temp inv 5

A_INF (Parallel), B_INF (Parallel), S_INF (Parallel), VECTOR (Parallel)

Can be changed: - **Access level:** 3
Data type: Floating Point **Data set:** PDS **Function diagram:** -
P-Group: Displays, signals **Units group:** TEMPERATURE **Unit selection:** -

Min	Max	Factory setting
- [°C]	- [°C]	- [°C]

Description: Displays the inverter temperature 5 in the power module for a parallel circuit configuration.
The maximum value of all power modules is displayed in r0037[9].

r7211[0...n] Par_circuit power module temperatures inverter 6 / PM temp inv 6

A_INF (Parallel), B_INF (Parallel), S_INF (Parallel), VECTOR (Parallel)

Can be changed: - **Access level:** 3
Data type: Floating Point **Data set:** PDS **Function diagram:** -
P-Group: Displays, signals **Units group:** TEMPERATURE **Unit selection:** -

Min	Max	Factory setting
- [°C]	- [°C]	- [°C]

Description: Displays the inverter temperature 6 in the power module for a parallel circuit configuration.
The maximum value of all power modules is displayed in r0037[10].

© Siemens AG, 2005. All rights reserved

r7212[0...n] Par_circuit power module temperatures inverter 1 / PM temp rect 1

A_INF (Parallel), B_INF (Parallel), S_INF (Parallel), VECTOR (Parallel)

Can be changed: - **Access level:** 3
Data type: Floating Point **Data set:** PDS **Function diagram:** -
P-Group: Displays, signals **Units group:** TEMPERATURE **Unit selection:** -

Min	Max	Factory setting
- [°C]	- [°C]	- [°C]

Description: Displays rectifier temperature 1 in the power module for a parallel circuit configuration.
The maximum value of all power modules is displayed in r0037[11].

r7213[0...n] Par_circuit power module temperatures inverter 2 / PM temp rect 2

A_INF (Parallel), B_INF (Parallel), S_INF (Parallel), VECTOR (Parallel)

Can be changed: - **Access level:** 3
Data type: Floating Point **Data set:** PDS **Function diagram:** -
P-Group: Displays, signals **Units group:** TEMPERATURE **Unit selection:** -

Min	Max	Factory setting
- [°C]	- [°C]	- [°C]

Description: Displays rectifier temperature 2 in the power module for a parallel circuit configuration.
The maximum value of all power modules is displayed in r0037[12].

r7214[0...n] Par_circuit power module temperatures depletion layer 1 / PM temp DepLayer 1

A_INF (Parallel), B_INF (Parallel), S_INF (Parallel), VECTOR (Parallel)

Can be changed: - **Access level:** 3
Data type: Floating Point **Data set:** PDS **Function diagram:** -
P-Group: Displays, signals **Units group:** TEMPERATURE **Unit selection:** -

Min	Max	Factory setting
- [°C]	- [°C]	- [°C]

Description: Displays depletion layer temperature 1 in the power module for a parallel circuit configuration.
The maximum value of all power modules is displayed in r0037[13].

r7215[0...n] Par_circuit power module temperatures depletion layer 2 / PM temp DepLayer 2

A_INF (Parallel), B_INF (Parallel), S_INF (Parallel), VECTOR (Parallel)

Can be changed: - **Access level:** 3
Data type: Floating Point **Data set:** PDS **Function diagram:** -
P-Group: Displays, signals **Units group:** TEMPERATURE **Unit selection:** -

Min	Max	Factory setting
- [°C]	- [°C]	- [°C]

Description: Displays depletion layer temperature 2 in the power module for a parallel circuit configuration.
The maximum value of all power modules is displayed in r0037[14].

r7216[0...n] Par_circuit power module temperatures depletion layer 3 / PM temp DepLayer 3

A_INF (Parallel), B_INF (Parallel), S_INF (Parallel), VECTOR (Parallel)

Can be changed: - **Access level:** 3
Data type: Floating Point **Data set:** PDS **Function diagram:** -
P-Group: Displays, signals **Units group:** TEMPERATURE **Unit selection:** -

Min	Max	Factory setting
- [°C]	- [°C]	- [°C]

Description: Displays depletion layer temperature 3 in the power module for a parallel circuit configuration.
The maximum value of all power modules is displayed in r0037[15].

© Siemens AG, 2005. All rights reserved

r7217[0...n] Par_circuit power module temperatures depletion layer 4 / PM temp DepLayer 4

A_INF (Parallel), B_INF (Parallel), S_INF (Parallel), VECTOR (Parallel)

Can be changed: -		**Access level:** 3
Data type: Floating Point	**Data set:** PDS	**Function diagram:** -
P-Group: Displays, signals	**Units group:** TEMPERATURE	**Unit selection:** -
Min	**Max**	**Factory setting**
- [°C]	- [°C]	- [°C]

Description: Displays depletion layer temperature 4 in the power module for a parallel circuit configuration.
The maximum value of all power modules is displayed in r0037[16].

r7218[0...n] Par_circuit power module temperatures depletion layer 5 / PM temp DepLayer 5

A_INF (Parallel), B_INF (Parallel), S_INF (Parallel), VECTOR (Parallel)

Can be changed: -		**Access level:** 3
Data type: Floating Point	**Data set:** PDS	**Function diagram:** -
P-Group: Displays, signals	**Units group:** TEMPERATURE	**Unit selection:** -
Min	**Max**	**Factory setting**
- [°C]	- [°C]	- [°C]

Description: Displays depletion layer temperature 5 in the power module for a parallel circuit configuration.
The maximum value of all power modules is displayed in r0037[17].

r7219[0...n] Par_circuit power module temperatures depletion layer 6 / PM temp DepLayer 6

A_INF (Parallel), B_INF (Parallel), S_INF (Parallel), VECTOR (Parallel)

Can be changed: -		**Access level:** 3
Data type: Floating Point	**Data set:** PDS	**Function diagram:** -
P-Group: Displays, signals	**Units group:** TEMPERATURE	**Unit selection:** -
Min	**Max**	**Factory setting**
- [°C]	- [°C]	- [°C]

Description: Displays depletion layer temperature 6 in the power module for a parallel circuit configuration.
The maximum value of all power modules is displayed in r0037[18].

r7220[0...n] Infeed par_circuit absolute current value, motoring permissible / INF I_abs mot perm

A_INF (Parallel), S_INF (Parallel)

Can be changed: -		**Access level:** 3
Data type: Floating Point	**Data set:** PDS	**Function diagram:** -
P-Group: Displays, signals	**Units group:** CURRENT_AC_EFF	**Unit selection:** -
Min	**Max**	**Factory setting**
- [Aeff]	- [Aeff]	- [Aeff]

Description: Displays the currently permissible line-side absolute current when motoring.
The minimum value of all power modules multiplied by the number Motor Modules is displayed in r0067[0].

r7220[0...n] Par_circuit drive output current, maximum / Drv I_output max

VECTOR (Parallel)

Can be changed: -		**Access level:** 3
Data type: Floating Point	**Data set:** PDS	**Function diagram:** -
P-Group: Displays, signals	**Units group:** CURRENT_AC_EFF	**Unit selection:** -
Min	**Max**	**Factory setting**
- [Aeff]	- [Aeff]	- [Aeff]

Description: Displays the maximum output current of the power module.
The minimum value of all power modules multiplied by the number Motor Modules is displayed in r0067.

© Siemens AG, 2005. All rights reserved

r7221[0...n] Infeed par_circuit absolute current regenerating, permissible / INF I_absRegenPerm

A_INF (Parallel), S_INF (Parallel)

Can be changed: -		**Access level:** 3
Data type: Floating Point	**Data set:** PDS	**Function diagram:** -
P-Group: Displays, signals	**Units group:** CURRENT_AC_EFF	**Unit selection:** -
Min	**Max**	**Factory setting**
- [Aeff]	- [Aeff]	- [Aeff]

Description: Displays the currently permissible line-side absolute regenerative current.
The minimum value of all power modules multiplied by the number Motor Modules is displayed in r0067[1].

r7222[0...n] Par_circuit absolute current actual value / I_act abs.val.

A_INF (Parallel), S_INF (Parallel), VECTOR (Parallel)

Can be changed: -		**Access level:** 3
Data type: Floating Point	**Data set:** PDS	**Function diagram:** -
P-Group: Displays, signals	**Units group:** CURRENT_AC_EFF	**Unit selection:** -
Min	**Max**	**Factory setting**
- [Aeff]	- [Aeff]	- [Aeff]

Description: Displays actual absolute current.
The summed value of all power modules is displayed in r0068.

r7223[0...n] Par_circuit phase current, actual value phase U / I_phase U act val

A_INF (Parallel), S_INF (Parallel), VECTOR (Parallel)

Can be changed: -		**Access level:** 3
Data type: Floating Point	**Data set:** PDS	**Function diagram:** -
P-Group: Displays, signals	**Units group:** CURRENT_AC_PP	**Unit selection:** -
Min	**Max**	**Factory setting**
- [A]	- [A]	- [A]

Description: Displays the measured actual value of phase U as peak value.
The summed value of all power modules is displayed in r0069[0].

r7224[0...n] Par_circuit phase current, actual value phase V / I_phase V act val

A_INF (Parallel), S_INF (Parallel), VECTOR (Parallel)

Can be changed: -		**Access level:** 3
Data type: Floating Point	**Data set:** PDS	**Function diagram:** -
P-Group: Displays, signals	**Units group:** CURRENT_AC_PP	**Unit selection:** -
Min	**Max**	**Factory setting**
- [A]	- [A]	- [A]

Description: Displays the measured actual value of phase V as peak value.
The summed value of all power modules is displayed in r0069[1].

r7225[0...n] Par_circuit phase current, actual value phase W / I_phase W act val

A_INF (Parallel), S_INF (Parallel), VECTOR (Parallel)

Can be changed: -		**Access level:** 3
Data type: Floating Point	**Data set:** PDS	**Function diagram:** -
P-Group: Displays, signals	**Units group:** CURRENT_AC_PP	**Unit selection:** -
Min	**Max**	**Factory setting**
- [A]	- [A]	- [A]

Description: Displays the measured actual value of phase W as peak value.
The summed value of all power modules is displayed in r0069[2].

© Siemens AG, 2005. All rights reserved

r7226[0...n] Par_circuit phase current actual value, phase U offset / I_phase U offset

A_INF (Parallel), S_INF (Parallel), VECTOR (Parallel)

Can be changed: -		**Access level:** 3
Data type: Floating Point	**Data set:** PDS	**Function diagram:** -
P-Group: Displays, signals	**Units group:** CURRENT_AC_PP	**Unit selection:** -
Min	**Max**	**Factory setting**
- [A]	- [A]	- [A]

Description: Displays the measured offset of phase U as peak value.
The summed value of all power modules is displayed in r0069[3].

r7227[0...n] Par_circuit phase current, actual value, phase V offset / I_phase V offset

A_INF (Parallel), S_INF (Parallel), VECTOR (Parallel)

Can be changed: -		**Access level:** 3
Data type: Floating Point	**Data set:** PDS	**Function diagram:** -
P-Group: Displays, signals	**Units group:** CURRENT_AC_PP	**Unit selection:** -
Min	**Max**	**Factory setting**
- [A]	- [A]	- [A]

Description: Displays the measured offset of phase V as peak value.
The summed value of all power modules is displayed in r0069[4].

r7228[0...n] Par_circuit phase current, actual value, phase W offset / I_phase W offset

A_INF (Parallel), S_INF (Parallel), VECTOR (Parallel)

Can be changed: -		**Access level:** 3
Data type: Floating Point	**Data set:** PDS	**Function diagram:** -
P-Group: Displays, signals	**Units group:** CURRENT_AC_PP	**Unit selection:** -
Min	**Max**	**Factory setting**
- [A]	- [A]	- [A]

Description: Displays the measured offset of phase W as peak value.
The summed value of all power modules is displayed in r0069[5].

r7229[0...n] Par_circuit phase current actual value sum U, V, W / I_phase sum UVW

A_INF (Parallel), S_INF (Parallel), VECTOR (Parallel)

Can be changed: -		**Access level:** 3
Data type: Floating Point	**Data set:** PDS	**Function diagram:** -
P-Group: Displays, signals	**Units group:** CURRENT_AC_PP	**Unit selection:** -
Min	**Max**	**Factory setting**
- [A]	- [A]	- [A]

Description: Displays the measured sum of the currents in phases U, V and W as peak value.
The summed value of all power modules is displayed in r0069[6].

r7230[0...n] Par_circuit DC link voltage actual value / Vdc_act

A_INF (Parallel), B_INF (Parallel), S_INF (Parallel), VECTOR (Parallel)

Can be changed: -		**Access level:** 3
Data type: Floating Point	**Data set:** PDS	**Function diagram:** -
P-Group: Displays, signals	**Units group:** VOLTAGE_DC	**Unit selection:** -
Min	**Max**	**Factory setting**
- [V]	- [V]	- [V]

Description: Displays the measured actual value of the DC link voltage.
The average value of all power modules is displayed in r0070.

© Siemens AG, 2005. All rights reserved

r7231[0...n] Par_circuit phase voltage, actual value phase U / U_phase U act val

A_INF (Parallel), S_INF (Parallel), VECTOR (Parallel)

Can be changed: -		**Access level:** 3
Data type: Floating Point	**Data set:** PDS	**Function diagram:** -
P-Group: Displays, signals	**Units group:** VOLTAGE_AC_PP	**Unit selection:** -
Min	**Max**	**Factory setting**
- [V]	- [V]	- [V]

Description: Displays the actual voltage, phase U.
The average value of all power modules is displayed in r0089[0].

r7232[0...n] Par_circuit phase voltage, actual value phase V / U_phase V act val

A_INF (Parallel), S_INF (Parallel), VECTOR (Parallel)

Can be changed: -		**Access level:** 3
Data type: Floating Point	**Data set:** PDS	**Function diagram:** -
P-Group: Displays, signals	**Units group:** VOLTAGE_AC_PP	**Unit selection:** -
Min	**Max**	**Factory setting**
- [V]	- [V]	- [V]

Description: Displays the actual voltage, phase V.
The average value of all power modules is displayed in r0089[1].

r7233[0...n] Par_circuit phase voltage, actual value phase W / U_phase W act val

A_INF (Parallel), S_INF (Parallel), VECTOR (Parallel)

Can be changed: -		**Access level:** 3
Data type: Floating Point	**Data set:** PDS	**Function diagram:** -
P-Group: Displays, signals	**Units group:** VOLTAGE_AC_PP	**Unit selection:** -
Min	**Max**	**Factory setting**
- [V]	- [V]	- [V]

Description: Displays the actual voltage, phase W.
The average value of all power modules is displayed in r0089[2].

r7250[0...4] Par_circuit power module rated power / PM P_rated

A_INF (Parallel), B_INF (Parallel), S_INF (Parallel), VECTOR (Parallel)

Can be changed: -		**Access level:** 2
Data type: Floating Point	**Data set:** -	**Function diagram:** -
P-Group: Converter	**Units group:** POWER_P3	**Unit selection:** -
Min	**Max**	**Factory setting**
- [kW]	- [kW]	- [kW]

Description: Displays the rated power of the individual power modules connected in parallel for various load duty cycles.
The sum of the rated powers of all power modules connected in parallel is displayed in r0206.

Index:
[0] = Rating plate
[1] = Load duty cycle with high overload
[2] = Load duty cycle with low overload
[3] = S1 load duty cycle
[4] = S6 load duty cycle

Dependency: The value is displayed in [kW] or [hp].
Refer to: p0100, p0205

© Siemens AG, 2005. All rights reserved

r7251[0...4] Par_circuit power module rated current / PM I_rated

A_INF (Parallel), B_INF (Parallel), S_INF (Parallel), VECTOR (Parallel)

Can be changed: -		**Access level:** 2
Data type: Floating Point	**Data set:** -	**Function diagram:** -
P-Group: Converter	**Units group:** CURRENT_AC_EFF	**Unit selection:** -
Min	**Max**	**Factory setting**
- [Aeff]	- [Aeff]	- [Aeff]

Description: Displays the rated current of the individual power modules connected in parallel for various load duty cycles.
The sum of the rated currents of all power modules connected in parallel is displayed in r0207.

Index: [0] = Rating plate
[1] = Load duty cycle with high overload
[2] = Load duty cycle with low overload
[3] = S1 load duty cycle
[4] = S6 load duty cycle

Dependency: Refer to: p0205

r7252[0...4] Par_circuit maximum power module current / PM I_max

A_INF (Parallel), B_INF (Parallel), S_INF (Parallel), VECTOR (Parallel)

Can be changed: -		**Access level:** 2
Data type: Floating Point	**Data set:** -	**Function diagram:** -
P-Group: Converter	**Units group:** CURRENT_AC_EFF	**Unit selection:** -
Min	**Max**	**Factory setting**
- [Aeff]	- [Aeff]	- [Aeff]

Description: Displays the maximum output current of the individual power modules connected in parallel.
The sum of the maximum currents of all power modules connected in parallel is displayed in r0209.

Index: [0] = Rating plate
[1] = Load duty cycle with high overload
[2] = Load duty cycle with low overload
[3] = S1 load duty cycle
[4] = S6 load duty cycle

Dependency: Refer to: p0205

r7300[0...n] CO: Par_circuit VSM input line voltage u1 - u2 / VSM input u1-u2

A_INF (Parallel), S_INF (Parallel)

Can be changed: -		**Access level:** 3
Data type: Floating Point	**Data set:** -	**Function diagram:** -
P-Group: Closed-loop control	**Units group:** VOLTAGE_AC_PP	**Unit selection:** -
Min	**Max**	**Factory setting**
- [V]	- [V]	- [V]

Description: Displays the voltage between phases L1 and L2 of the particular Voltage Sensing Module (VSM) for a parallel circuit configuration.
The average value of all VSM is displayed in r3661.

Dependency: Refer to: p3660

Note: X521.1 or X522.1: Connection of L1
X521.2 or X522.2: Connection of L2

© Siemens AG, 2005. All rights reserved

r7301[0...n] CO: Par_circuit VSM input line voltage u2 - u3 / VSM input u2-u3

A_INF (Parallel), S_INF (Parallel)

Can be changed: -		**Access level:** 3
Data type: Floating Point	**Data set:** -	**Function diagram:** -
P-Group: Closed-loop control	**Units group:** VOLTAGE_AC_PP	**Unit selection:** -
Min	**Max**	**Factory setting**
- [V]	- [V]	- [V]

Description: Displays the voltage between phases L2 and L3 of the particular Voltage Sensing Module (VSM) for a parallel circuit configuration.

The average value of all VSM is displayed in r3662.

Dependency: Refer to: p3660

Note: X521.2 or X522.2: Connection of L2

X521.3 or X522.3: Connection of L3

r7305[0...n] Par_circuit VSM temperature evaluation, status / VSM temp status

A_INF (Parallel), S_INF (Parallel)

Can be changed: -		**Access level:** 3
Data type: Unsigned16	**Data set:** -	**Function diagram:** -
P-Group: Terminals	**Units group:** -	**Unit selection:** -
Min	**Max**	**Factory setting**
-	-	-

Description: Displays the status of the temperature evaluation of the particular Voltage Sensing Module (VSM) for a parallel circuit configuration.

This displays as to whether the temperature actual value has exceeded the fault/alarm threshold.

The overall status of the temperature evaluation of all VSM is displayed in r3664.

Bit field:

Bit	Signal name	0 signal	1 signal	FP
00	Temperature alarm threshold exceeded	No	Yes	-
01	Temperature fault threshold exceeded	No	Yes	-

Dependency: Refer to: p3665, r3666, p3667, p3668

r7306[0...n] CO: Par_circuit VSM temperature KTY / VSM temp KTY

A_INF (Parallel), S_INF (Parallel)

Can be changed: -		**Access level:** 3
Data type: Floating Point	**Data set:** -	**Function diagram:** -
P-Group: Closed-loop control	**Units group:** TEMPERATURE	**Unit selection:** -
Min	**Max**	**Factory setting**
- [°C]	- [°C]	- [°C]

Description: Displays the temperature actual value of the KTY84 temperature sensor connected to the Voltage Sensing Module (VSM) for a parallel circuit configuration.

The maximum value of all VSM is displayed in r3666.

Prerequisite:

A KTY84 sensor is connected and p3665 is set to 2.

Dependency: Refer to: p3665

© Siemens AG, 2005. All rights reserved

r7310[0...n] CO: Par_circuit VSM 10 V input CT1 actual value / VSM CT 1 I_act

A_INF (Parallel), S_INF (Parallel)

Can be changed: -		**Access level:** 3
Data type: Floating Point	**Data set:** -	**Function diagram:** -
P-Group: Closed-loop control	**Units group:** CURRENT_AC_PP	**Unit selection:** -
Min	**Max**	**Factory setting**
- [A]	- [A]	- [A]

Description: Displays the current actual value from current transducer (CT) 1 at the 10 V input of the particular Voltage Sensing Module (VSM) for a parallel circuit configuration.
The average value of all VSM is displayed in r3671.

Dependency: Refer to: p3670

Note: The CT for phase 1 is connected at terminals X520.1 and X520.2 of the VSM.

r7311[0...n] CO: Par_circuit VSM 10 V input CT2 actual value / VSM CT 2 I_act

A_INF (Parallel), S_INF (Parallel)

Can be changed: -		**Access level:** 3
Data type: Floating Point	**Data set:** -	**Function diagram:** -
P-Group: Closed-loop control	**Units group:** CURRENT_AC_PP	**Unit selection:** -
Min	**Max**	**Factory setting**
- [A]	- [A]	- [A]

Description: Displays the current actual value from current transducer (CT) 2 at the 10 V input of the particular Voltage Sensing Module (VSM) for a parallel circuit configuration.
The average value of all VSM is displayed in r3672.

Dependency: Refer to: p3670

Note: The CT for phase 2 is connected at terminals X520.3 and X520.4 of the VSM.

r7315[0...n] CO: Par_circuit VSM 10 V input 1 actual value / VSM input 1 U_act

A_INF (Parallel), S_INF (Parallel)

Can be changed: -		**Access level:** 3
Data type: Floating Point	**Data set:** -	**Function diagram:** -
P-Group: Closed-loop control	**Units group:** VOLTAGE_AC_PP	**Unit selection:** -
Min	**Max**	**Factory setting**
- [V]	- [V]	- [V]

Description: Displays the actual value of the voltage measured at the 10 V input 1 of the Voltage Sensing Modules (VSM).
The average value of all VSM is displayed in r3673.

Dependency: Refer to: p3670

Note: 10 V input 1: Terminals X520.1 and X520.2

r7316[0...n] CO: Par_circuit VSM 10 V input 2 actual value / VSM input 2 U_act

A_INF (Parallel), S_INF (Parallel)

Can be changed: -		**Access level:** 3
Data type: Floating Point	**Data set:** -	**Function diagram:** -
P-Group: Closed-loop control	**Units group:** VOLTAGE_AC_PP	**Unit selection:** -
Min	**Max**	**Factory setting**
- [V]	- [V]	- [V]

Description: Displays the actual value of the voltage measured at the 10 V input 2 of the Voltage Sensing Modules (VSM).
The average value of all VSM is displayed in r3674.

Dependency: Refer to: p3670

Note: 10 V input 2: Terminals X520.3 and X520.4

© Siemens AG, 2005. All rights reserved

r7320[0...n] Par_circuit VSM line filter capacitance phase U / VSM filt C phase U

A_INF (Parallel), S_INF (Parallel)

Can be changed: -		**Access level:** 4
Data type: Floating Point	**Data set:** -	**Function diagram:** -
P-Group: Closed-loop control	**Units group:** CAPACITY_M6	**Unit selection:** -
Min	**Max**	**Factory setting**
- [µF]	- [µF]	- [µF]

Description: Displays the capacitance of the line filter, phase U of the particular Voltage Sensing Module (VSM).
The average value of all VSM is displayed in r3677[0].

Dependency: Refer to: p3676

Note: Prerequisites:
The filter capacitance monitoring is activated.

r7321[0...n] Par_circuit VSM line filter capacitance phase V / VSM filt C phase V

A_INF (Parallel), S_INF (Parallel)

Can be changed: -		**Access level:** 4
Data type: Floating Point	**Data set:** -	**Function diagram:** -
P-Group: Closed-loop control	**Units group:** CAPACITY_M6	**Unit selection:** -
Min	**Max**	**Factory setting**
- [µF]	- [µF]	- [µF]

Description: Displays the capacitance of the line filter, phase V of the particular Voltage Sensing Module (VSM).
The average value of all VSM is displayed in r3677[1].

Dependency: Refer to: p3676

Note: Prerequisites:
The filter capacitance monitoring is activated.

r7322[0...n] Par_circuit VSM line filter capacitance phase W / VSM filt C phase W

A_INF (Parallel), S_INF (Parallel)

Can be changed: -		**Access level:** 4
Data type: Floating Point	**Data set:** -	**Function diagram:** -
P-Group: Closed-loop control	**Units group:** CAPACITY_M6	**Unit selection:** -
Min	**Max**	**Factory setting**
- [µF]	- [µF]	- [µF]

Description: Displays the capacitance of the line filter, phase W of the particular Voltage Sensing Module (VSM).
The average value of all VSM is displayed in r3677[2].

Dependency: Refer to: p3676

Note: Prerequisites:
The filter capacitance monitoring is activated.

p7820 DRIVE-CLiQ component, component number / DLQ comp_no

CU_S

Can be changed: U, T		**Access level:** 4
Data type: Unsigned16	**Data set:** -	**Function diagram:** -
P-Group: -	**Units group:** -	**Unit selection:** -
Min	**Max**	**Factory setting**
0	65535	0

Description: Sets the component number of the DRIVE-CLiQ component whose parameters are to be accessed.

Dependency: Refer to: p7821, p7822, r7823

© Siemens AG, 2005. All rights reserved

p7821 DRIVE-CLiQ component, parameter number / DLQ para_no

CU_S	**Can be changed:** U, T		**Access level:** 4
	Data type: Unsigned16	**Data set:** -	**Function diagram:** -
	P-Group: -	**Units group:** -	**Unit selection:** -
	Min	**Max**	**Factory setting**
	0	65535	0

Description: Sets the parameter number to access a parameter of a DRIVE-CLiQ component.
Dependency: Refer to: p7820, p7822, r7823

p7822 DRIVE-CLiQ component, parameter index / DLQ para_index

CU_S	**Can be changed:** U, T		**Access level:** 4
	Data type: Unsigned16	**Data set:** -	**Function diagram:** -
	P-Group: -	**Units group:** -	**Unit selection:** -
	Min	**Max**	**Factory setting**
	0	65535	0

Description: Sets the parameter index to access a parameter of a DRIVE-CLiQ component.
Dependency: Refer to: p7820, p7821, r7823

r7823 DRIVE-CLiQ component, read parameter value / Read DLQ value

CU_S	**Can be changed:** -		**Access level:** 4
	Data type: Unsigned32	**Data set:** -	**Function diagram:** -
	P-Group: -	**Units group:** -	**Unit selection:** -
	Min	**Max**	**Factory setting**
	-	-	-

Description: Displays the parameter value read from the DRIVE-CLiQ component.
Dependency: Refer to: p7820, p7821, p7822

p7828 Firmware download component number / FW_download number

CU_S	**Can be changed:** U, T		**Access level:** 3
	Data type: Unsigned16	**Data set:** -	**Function diagram:** -
	P-Group: -	**Units group:** -	**Unit selection:** -
	Min	**Max**	**Factory setting**
	0	399	0

Description: Component number of the DRIVE-CLiQ component for which a firmware download is to be made.
Dependency: Refer to: p0121, p0141, p0151, p7829
Note: For p7828 = 399, the firmware for all of the known components is downloaded.
The firmware download is started with p7829 = 1.

© Siemens AG, 2005. All rights reserved

p7829 Activate firmware download / Act. FW_download

CU_S	**Can be changed:** U, T		**Access level:** 3
	Data type: Integer16	**Data set:** -	**Function diagram:** -
	P-Group: -	**Units group:** -	**Unit selection:** -
	Min	**Max**	**Factory setting**
	0	999	0

Description: Activating the firmware download for the DRIVE-CLiQ components specified in p7828.
1: Activate download
0: Download successfully completed
> 1: Fault code
011: DRIVE-CLiQ component has detected a checksum error.
015: The selected DRIVE-CLiQ components did not accept the contents of the firmware file.
101: After several communication attempts, not response from the DRIVE-CLiQ component.
140: Firmware file for the DRIVE-CLiQ component not available on the CompactFlash card.
143: Component is not changed in the firmware download mode.
156: Component with the specified component number is not available.
Additional values:
Only for internal Siemens troubleshooting.

Dependency: Refer to: p7828

Note: p7829 is automatically set to 0 after the firmware has been successfully downloaded.
The new firmware only becomes active at the next system run-up.

p7830 Diagnostics telegram selection / Diag telegram

SERVO, VECTOR	**Can be changed:** T		**Access level:** 4
	Data type: Integer16	**Data set:** -	**Function diagram:** -
	P-Group: -	**Units group:** -	**Unit selection:** -
	Min	**Max**	**Factory setting**
	0	3	0

Description: Selects a telegram whose contents should be shown in p7831 ... p7836.

Values:
0: Reserved
1: First cyclic receive telegram, sensor 1
2: First cyclic receive telegram, sensor 2
3: First cyclic receive telegram, sensor 3

Dependency: Refer to: r7831, r7832, r7833, r7834, r7835, r7836

© Siemens AG, 2005. All rights reserved

r7831[0...15] Telegram diagnostics signals / Tel diag signals

SERVO, VECTOR	**Can be changed:** -		**Access level:** 4
	Data type: Integer16	**Data set:** -	**Function diagram:** -
	P-Group: -	**Units group:** -	**Unit selection:** -
	Min	**Max**	**Factory setting**
	-	-	-

Description: Displays the signals contained in the selected telegram (p7830).

Values:

0: UNUSED
1: UNKNOWN
102: SAPAR_ID_DSA_ALARM
110: SAPAR_ALARMBITS_FLOAT_0
111: SAPAR_ALARMBITS_FLOAT_1
112: SAPAR_ALARMBITS_FLOAT_2
113: SAPAR_ALARMBITS_FLOAT_3
114: SAPAR_ALARMBITS_FLOAT_4
115: SAPAR_ALARMBITS_FLOAT_5
10500: ENC_ID_TIME_PRETRIGGER
10501: ENC_ID_TIME_SEND_TELEG_1
10502: ENC_ID_TIME_CYCLE_FINISHED
10503: ENC_ID_TIME_DELTA_FUNMAN
10504: ENC_ID_SUBTRACE_CALCTIMES
10505: ENC_ID_SYNO_PERIOD
10516: ENC_ID_ADC_TRACK_A
10517: ENC_ID_ADC_TRACK_B
10518: ENC_ID_ADC_TRACK_C
10519: ENC_ID_ADC_TRACK_D
10520: ENC_ID_ADC_TRACK_A_SAFETY
10521: ENC_ID_ADC_TRACK_B_SAFETY
10523: ENC_ID_ADC_TEMP_1
10532: ENC_ID_TRACK_AB_X
10533: ENC_ID_TRACK_AB_Y
10534: ENC_ID_OFFSET_CORR_AB_X
10535: ENC_ID_OFFSET_CORR_AB_Y
10536: ENC_ID_AB_ABS_VALUE
10537: ENC_ID_TRACK_CD_X
10538: ENC_ID_TRACK_CD_Y
10539: ENC_ID_TRACK_CD_ABS
10542: ENC_ID_AB_RAND_X
10543: ENC_ID_AB_RAND_Y
10544: ENC_ID_AB_RAND_ABS_VALUE
10545: ENC_ID_SUBTRACE_ABS_ARRAY
10546: ENC_ID_PROC_OFFSET_0
10547: ENC_ID_PROC_OFFSET_4
10564: ENC_SELFTEMP_ACT
10565: ENC_ID_MOTOR_TEMP_TOP
10566: ENC_ID_MOTOR_TEMP_1
10580: ENC_ID_RESISTANCE_1
10596: ENC_ID_AB_ANGLE
10597: ENC_ID_CD_ANGLE
10598: ENC_ID_MECH_ANGLE_HI
10599: ENC_ID_RM_POS_PHI_COMMU
10600: ENC_ID_PHI_COMMU
10612: ENC_ID_DIFF_CD_INC
10613: ENC_ID_RM_POS_PHI_COMMU_RFG
10628: ENC_ID_MECH_ANGLE
10629: ENC_ID_MECH_RM_POS
10644: ENC_ID_INIT_VECTOR
10645: FEAT_INIT_VEKTOR
10660: ENC_ID_SENSOR_STATE
10661: ENC_ID_BASIC_SYSTEM

© Siemens AG, 2005. All rights reserved

10662: ENC_ID_REFMARK_STATUS
10663: ENC_ID_DSA_STATUS1_SENSOR
10664: ENC_ID_DSA_RMSTAT_HANDSHAKE
10665: ENC_ID_DSA_CONTROL1_SENSOR
10676: ENC_ID_COUNTCORR_SAW_VALUE
10677: ENC_ID_COUNTCORR_ABS_VALUE
10678: ENC_ID_SAWTOOTH_CORR
10692: ENC_ID_RESISTANCE_CALIB_INSTANT
10693: ENC_ID_SERPROT_POS
10724: ENC_ID_ACT_FUNMAN_FUNCTION
10725: ENC_ID_SAFETY_COUNTER_CRC
10740: ENC_ID_POS_ABSOLUTE
10741: ENC_ID_POS_REFMARK
10742: ENC_ID_SAWTOOTH
10743: ENC_ID_SAFETY_PULSE_COUNTER
10756: ENC_ID_DSA_ACTUAL_SPEED
10772: ENC_ID_DSA_POS_XIST1
10788: ENC_ID_AB_CROSS_CORR
10789: ENC_ID_AB_GAIN_Y_CORR

Index:

[0] =
[1] =
[2] =
[3] =
[4] =
[5] =
[6] =
[7] =
[8] =
[9] =
[10] =
[11] =
[12] =
[13] =
[14] =
[15] =

© Siemens AG, 2005. All rights reserved

r7832[0...15] Telegram diagnostics numerical format / tel diag format

SERVO, VECTOR	**Can be changed:** -		**Access level:** 4
	Data type: Integer16	**Data set:** -	**Function diagram:** -
	P-Group: -	**Units group:** -	**Unit selection:** -
	Min	**Max**	**Factory setting**
	-	-	-

Description: Indicates the original numerical format of the signals contained in the telegram.
The associated signal number is represented at the appropriate index in r7831.

Values:
-1: Unknown
0: Boolean
1: Signed 1 byte
2: Signed 2 byte
3: Signed 4 byte
4: Signed 8 byte
5: Unsigned 1 byte
6: Unsigned 2 byte
7: Unsigned 4 byte
8: Unsigned 8 byte
9: Float 4 byte
10: Double 8 byte
11: mm dd yy HH MM SS MS DOW
12: ASCII string
13: SIMUMERIK frame type
14: SIMUMERIK axis type

Index:
[0] =
[1] =
[2] =
[3] =
[4] =
[5] =
[6] =
[7] =
[8] =
[9] =
[10] =
[11] =
[12] =
[13] =
[14] =
[15] =

© Siemens AG, 2005. All rights reserved

r7833[0...15] Telegram diagnostics unsigned / Tel diag unsigned

SERVO, VECTOR	**Can be changed:** -		**Access level:** 4
	Data type: Unsigned32	**Data set:** -	**Function diagram:** -
	P-Group: -	**Units group:** -	**Unit selection:** -
	Min	**Max**	**Factory setting**
	-	-	-

Description: Parameter to display a DSA signal in the unsigned-integer format.
The associated signal number is represented at the appropriate index in r7831.

Index:
[0] =
[1] =
[2] =
[3] =
[4] =
[5] =
[6] =
[7] =
[8] =
[9] =
[10] =
[11] =
[12] =
[13] =
[14] =
[15] =

r7834[0...15] Telegram diagnostics signed / Tel diag signed

SERVO, VECTOR	**Can be changed:** -		**Access level:** 4
	Data type: Integer32	**Data set:** -	**Function diagram:** -
	P-Group: -	**Units group:** -	**Unit selection:** -
	Min	**Max**	**Factory setting**
	-	-	-

Description: Parameter to display a DSA signal in the signed-integer format.
The associated signal number is represented at the appropriate index in r7831.

Index:
[0] =
[1] =
[2] =
[3] =
[4] =
[5] =
[6] =
[7] =
[8] =
[9] =
[10] =
[11] =
[12] =
[13] =
[14] =
[15] =

© Siemens AG, 2005. All rights reserved

r7835[0...15] Telegram diagnostics real / Tel diag real

SERVO, VECTOR	**Can be changed:** -		**Access level:** 4
	Data type: Floating Point	**Data set:** -	**Function diagram:** -
	P-Group: -	**Units group:** -	**Unit selection:** -
	Min	**Max**	**Factory setting**
	-	-	-

Description: Parameter to display a DSA signal in the float format.
The associated signal number is represented at the appropriate index in r7831.

Index:
[0] =
[1] =
[2] =
[3] =
[4] =
[5] =
[6] =
[7] =
[8] =
[9] =
[10] =
[11] =
[12] =
[13] =
[14] =
[15] =

r7836[0...15] Telegram diagnostics unit / Tel diag unit

SERVO, VECTOR	**Can be changed:** -		**Access level:** 4
	Data type: Integer16	**Data set:** -	**Function diagram:** -
	P-Group: -	**Units group:** -	**Unit selection:** -
	Min	**Max**	**Factory setting**
	-	-	-

Description: Parameter to display the units of a DSA signal.
The associated signal number is represented at the appropriate index in r7831.

Values:
-1: Unknown
0: None
1: Millimeter or degrees
2: Millimeter
3: Degrees
4: mm/min or RPM
5: Millimeter / min
6: Revolutions / min
7: m/sec^2 or V/sec^2
8: m/sec^2
9: V/sec^2
10: m/sec^3 or V/sec^3
11: m/sec^3
12: V/sec^3
13: Sec
14: 16.667 / sec
15: mm / rev
16: ACX_UNIT_COMPENSATION_CORR
18: Newton
19: Kilogram
20: Kilogram meter ^2
21: Percent
22: Hertz
23: Volt peak-to-peak
24: Amps, peak-to-peak

© Siemens AG, 2005. All rights reserved

25: Degrees Celsius
26: Degrees
28: Millimeter or degrees
29: Meters / minute
30: Meters / second
31: Ohm
32: Millihenry
33: Newton meter
34: Newton meter / Amps
35: Volt / Amp
36: Newton meter second / rad
38: 31.25 microseconds
39: Microseconds
40: Milliseconds
42: Kilowatt
43: Micro amps peak-to-peak
44: Volt seconds
45: Microvolt seconds
46: Micro Newton meter
47: Amps / Volt seconds
48: Per mille
49: Hertz / second
53: Micrometer or millidegrees
54: Micrometer
55: Millidegrees
59: Nanometer
61: Newton/Amps
62: Volt seconds / meter
63: Newton seconds / meter
64: Micronewton
65: Liters / minute
66: Bar
67: Cubic centimeters
68: Millimeters / Volt minute
69: Newton/Volt
80: Millivolts, peak-to-peak
81: Volt rms
82: Millivolts, rms
83: Amps rms
84: Micro amps, rms
85: Micrometers / revolution
90: Tenths of a second
91: Hundredths of a second
92: 10 microseconds
93: Pulses
94: 256 pulses
95: Tenth of a pulse
96: Revolutions
97: 100 revolutions / minute
98: 10 revolutions / minute
99: 0.1 revolutions / minute
100: Thousandth revolution / minute
101: Pulses / second
102: 100 pulses / second
103: 10 revolutions / (minute * second)
104: 10000 pulses/second^2
105: 0.1 Hertz
106: 0.01 Hertz
107: 0.1 / seconds
108: Factor 0.1
109: Factor 0.01
110: Factor 0.001
111: Factor 0.0001
112: 0.1 Volt peak-to-peak

© Siemens AG, 2005. All rights reserved

113: 0.1 Volt peak-to-peak
114: 0.1 amps, peak-to-peak
115: Watt
116: 100 Watt
117: 10 Watt
118: 0.01 percent
119: 1 / second ^3
120: 0.01 percent/millisecond
121: Pulses / revolution
122: Microfarads
123: Milliohm
124: 0.01 Newton meter
125: Kilogram millimeter ^2
126: Rad / (seconds newton meter)
127: Henry
128: Kelvin
129: Hours
130: Kilohertz
131: Milliamperes, peak-to-peak
132: Millifarads
133: Meter
135: Kilowatt hours
136: Percent
137: Amps / Volt
138: Volt
139: Millivolts
140: Microvolts
141: Amps
142: Milliamperes
143: Micro amps
144: Milliamperes, rms
145: Millimeter
146: Nanometer
147: Joules

Index: [0] =
[1] =
[2] =
[3] =
[4] =
[5] =
[6] =
[7] =
[8] =
[9] =
[10] =
[11] =
[12] =
[13] =
[14] =
[15] =

© Siemens AG, 2005. All rights reserved

r7843[0...20] CompactFlash card serial number / CF serial number

CU_S	**Can be changed:** -		**Access level:** 1
	Data type: Unsigned8	**Data set:** -	**Function diagram:** -
	P-Group: -	**Units group:** -	**Unit selection:** -
	Min	**Max**	**Factory setting**
	-	-	-

Description: Displays the actual serial number of the CompactFlash card.
The individual characters of the serial number are displayed in the ASCII code in the indices.

Dependency: Refer to: p9920, p9921

Note: Example for displaying a CompactFlash card serial number:
r7843[0] = 49 dec --> ASCII characters = "1" --> serial number, character 1
r7843[1] = 49 dec --> ASCII characters = "1" --> serial number, character 2
r7843[2] = 49 dec --> ASCII characters = "1" --> serial number, character 3
r7843[3] = 57 dec --> ASCII characters = "9" --> serial number, character 4
r7843[4] = 50 dec --> ASCII characters = "2" --> serial number, character 5
r7843[5] = 51 dec --> ASCII characters = "3" --> serial number, character 6
r7843[6] = 69 dec --> ASCII characters = "E" --> serial number, character 7
r7843[7] = 0 dec --> ASCII characters = " " --> serial number, character 8
...
r7843[19] = 0 dec --> ASCII characters = " " --> serial number, character 20
CompactFlash card serial number = 111923E

r7850[0...15] Drive object not operational/ready for operation / DO ready for oper

CU_S	**Can be changed:** -		**Access level:** 4
	Data type: Integer16	**Data set:** -	**Function diagram:** -
	P-Group: -	**Units group:** -	**Unit selection:** -
	Min	**Max**	**Factory setting**
	-	-	-

Description: Displays whether, for an activated drive object, all activated topology components are available or not (or whether these can be addressed).
0: Drive object not ready for operation
1: Drive object ready for operation

p7852 Number of indices for r7853 / No. indices r7853

CU_S	**Can be changed:** U, T		**Access level:** 4
	Data type: Unsigned16	**Data set:** -	**Function diagram:** -
	P-Group: -	**Units group:** -	**Unit selection:** -
	Min	**Max**	**Factory setting**
	1	200	1

Description: Displays the number of indices for r7853[0...n].
This corresponds to the number of DRIVE-CLiQ components that are assigned the drive object in the target topology.

Dependency: Refer to: r7853

© Siemens AG, 2005. All rights reserved

r7853[0...n] Component available/not available / Comp present

CU_S	**Can be changed:** -		**Access level:** 4
	Data type: Unsigned16	**Data set:** -	**Function diagram:** -
	P-Group: -	**Units group:** -	**Unit selection:** -
	Min	**Max**	**Factory setting**
	-	-	-

Description: Displays the component and whether this component is currently present.
High byte: Component number
Low byte: 0/1 (not available/available)

Dependency: Refer to: p7852

r7901[0...19] Time slice cycle times / Time slices t_cyc

CU_S	**Can be changed:** -		**Access level:** 4
	Data type: Floating Point	**Data set:** -	**Function diagram:** -
	P-Group: -	**Units group:** TIME_M6	**Unit selection:** -
	Min	**Max**	**Factory setting**
	- [µs]	- [µs]	- [µs]

Description: Displays the actual cycle times for all existing time slices.
For r7901[x] = 0, the following applies: The time slice is not active.

p8550 AOP LOCAL/REMOTE / AOP LOCAL/REMOTE

CU_S	**Can be changed:** U, T		**Access level:** 4
	Data type: Unsigned32	**Data set:** -	**Function diagram:** -
	P-Group: -	**Units group:** -	**Unit selection:** -
	Min	**Max**	**Factory setting**
	0000 bin	1111 1111 1111 1111 1111 1111 1111 1111 bin	0100 1001 bin

Description: Is used to save the current configuration of the Advanced Operator Panels (AOP).

Bit field:

Bit	Signal name	0 signal	1 signal	FP
00	LOCAL save	No	Yes	-
01	Start in LOCAL	No	Yes	-
02	Change in oper.	No	Yes	-
03	OFF acts like OFF2	No	Yes	-
04	OFF acts like OFF2	No	Yes	-
05	OFF acts like OFF3	No	Yes	-
07	CW/CCW active	No	Yes	-
08	Jog active	No	Yes	-
09	Save speed setpoint	No	Yes	-
14	Inhibit operation	No	Yes	-
15	Inhibit parameters	No	Yes	-

r8570[0...9] Macro drive unit / Macro drv unit

CU_S	**Can be changed:** -		**Access level:** 1
	Data type: Unsigned32	**Data set:** -	**Function diagram:** -
	P-Group: -	**Units group:** -	**Unit selection:** -
	Min	**Max**	**Factory setting**
	-	-	-

Description: Displays the ACX file saved in the appropriate directory of the CompactFlash card.

Dependency: Refer to: p0015

© Siemens AG, 2005. All rights reserved

r8570[0...9] Macro drive object / Macro DO

A_INF, B_INF, SERVO, S_INF, TM15DI/DO, TM31, VECTOR

Can be changed: -
Access level: 1
Data type: Unsigned32
Data set: -
Function diagram: -
P-Group: -
Units group: -
Unit selection: -

Min	Max	Factory setting
-	-	-

Description: Displays the ACX file saved in the appropriate directory of the CompactFlash card.
Dependency: Refer to: p0015

r8571[0...9] Macro Binector Input (BI) / Macro BI

A_INF, B_INF, SERVO, S_INF, VECTOR

Can be changed: -
Access level: 1
Data type: Unsigned32
Data set: -
Function diagram: -
P-Group: -
Units group: -
Unit selection: -

Min	Max	Factory setting
-	-	-

Description: Displays the ACX file saved in the appropriate directory of the CompactFlash card.
Dependency: Refer to: p0700

r8572[0...9] Macro Connector Inputs (CI) for speed setpoints / Macro CI n_set

A_INF, B_INF, SERVO, S_INF, VECTOR

Can be changed: -
Access level: 1
Data type: Unsigned32
Data set: -
Function diagram: -
P-Group: -
Units group: -
Unit selection: -

Min	Max	Factory setting
-	-	-

Description: Displays the ACX file saved in the appropriate directory of the CompactFlash card.
Dependency: Refer to: p1000

r8573[0...9] Macro Connector Inputs (CI) for torque setpoints / Macro CI M_set

A_INF, B_INF, SERVO, S_INF, VECTOR

Can be changed: -
Access level: 1
Data type: Unsigned32
Data set: -
Function diagram: -
P-Group: -
Units group: -
Unit selection: -

Min	Max	Factory setting
-	-	-

Description: Displays the ACX file saved in the appropriate directory of the CompactFlash card.
Dependency: Refer to: p1500

© Siemens AG, 2005. All rights reserved

r8600 CBC device type / Device type

CU_S (CAN)	**Can be changed:** -		**Access level:** 3
	Data type: Unsigned32	**Data set:** -	**Function diagram:** -
	P-Group: Communications	**Units group:** -	**Unit selection:** -
	Min	**Max**	**Factory setting**
	-	-	-

Description: Displays all of the devices connected to the CAN bus after run-up.
r8600
= 00000000 hex: No drive recognized.
= FFFF0192 hex: Several drives - drive 1 is an Active Line Module, servo drive or VECTOR drive
= FFFF0191 hex: Several drives - 1st drive is a Terminal Module
= 00010192 hex: 1 VECTOR drive
= 00020192 hex: 1 servo drive
= 01000192 hex: 1 Active Line Module
= 00080191 hex: 1 Terminal Module

Note: Corresponds to the CANopen object 1000 hex.
For each detected drive, the device type is displayed in object 67FF hex + 800 hex * x (x: drive number 0 ... 7).

r8601 CBC error register / Error register

CU_S (CAN)	**Can be changed:** -		**Access level:** 3
	Data type: Unsigned8	**Data set:** -	**Function diagram:** -
	P-Group: Communications	**Units group:** -	**Unit selection:** -
	Min	**Max**	**Factory setting**
	-	-	-

Description: Displays the error register for CANopen.
Bit 0: Generic fault
0 signal: No fault is present
1 signal: Generate fault is present
Bit 1 ... 3: Not supported (always a 0 signal)
Bit 4: Communications message
0 signal: There is no message in the range 8700 ... 8799
1 signal: There is at least one message (fault or alarm) in the range 8700 ... 8799
Bits 5 ... 6: Not supported (always a 0 signal)
Bit 7: Fault outside the range 8700 ... 8799
0 signal: There is no fault outside the range 8700 ... 8799
1 signal: There is at least one fault outside the range 8700 ... 8799

Note: Corresponds to the CANopen object 1001 hex.

p8602 CBC SYNC object / SYNC object

CU_S (CAN)	**Can be changed:** C1(1), T		**Access level:** 3
	Data type: Unsigned32	**Data set:** -	**Function diagram:** -
	P-Group: Communications	**Units group:** -	**Unit selection:** -
	Min	**Max**	**Factory setting**
	0000 hex	FFFF FFFF hex	0080 hex

Description: Sets the SYNC object parameter for the following CANopen objects:
- 1005 hex: COB-ID

Note: SINAMICS operates as SYNC load.
COB-ID: CAN object identification

© Siemens AG, 2005. All rights reserved

p8603 CBC emergency telegram / Emergency telegram

CU_S (CAN)	**Can be changed:** C1(1), T		**Access level:** 3
	Data type: Unsigned32	**Data set:** -	**Function diagram:** -
	P-Group: Communications	**Units group:** -	**Unit selection:** -
	Min	**Max**	**Factory setting**
	0000 hex	FFFF FFFF hex	0000 hex

Description: Sets emergency telegram parameters (error telegrams) for the following CANopen objects:
- 1014 hex: COB-ID

Note: If, when downloading, the pre-set value 0 is downloaded, then the CANopen pre-set value 80 hex + Node-ID is automatically set.

p8604[0...1] CBC node guarding / Node guarding

CU_S (CAN)	**Can be changed:** T		**Access level:** 3
	Data type: Unsigned16	**Data set:** -	**Function diagram:** -
	P-Group: -	**Units group:** -	**Unit selection:** -
	Min	**Max**	**Factory setting**
	0	65535	0

Description: Sets the node guarding parameter for the following CANopen objects:
- 100C hex: Guard time
- 100D hex: Life time factor

The life time is derived by multiplying guard time by the life time factor.

Index: [0] = Time interval [ms] for new node guarding telegram
[1] = Factor for failure of the node guarding telegram

Dependency: Only adjustable if heartbeat time = 0 (heartbeat is disabled).
Refer to: p8606

Note: For p8604[0] = 0 and/or p8604[1] = 0, the node guarding protocol is not used.
Either node guarding or heartbeat can be used.

p8606 CBC producer heartbeat time / Prod Heartb Time

CU_S (CAN)	**Can be changed:** T		**Access level:** 3
	Data type: Unsigned16	**Data set:** -	**Function diagram:** -
	P-Group: -	**Units group:** TIME_M3	**Unit selection:** -
	Min	**Max**	**Factory setting**
	0 [ms]	65535 [ms]	0 [ms]

Description: Sets the time [ms] to cyclically send heartbeat telegrams.
The smallest cycle time is 100 ms.
When a 0 is written, then heartbeat telegrams are not sent.

Dependency: Only adjustable if guard time = 0 (node guarding disabled).
Refer to: p8604

Note: Corresponds to the CANopen object 1017 hex.
Either node guarding or heartbeat can be used.

© Siemens AG, 2005. All rights reserved

r8607[0...3] CBC identity object / Identity object

CU_S (CAN)	**Can be changed:** -		**Access level:** 3
	Data type: Unsigned32	**Data set:** -	**Function diagram:** -
	P-Group: Communications	**Units group:** -	**Unit selection:** -
	Min	**Max**	**Factory setting**
	-	-	-

Description: General device information display.

Index: [0] = Vendor ID
[1] = Product code
[2] = Revision number
[3] = Serial number

Note: Corresponds to the CANopen object 1018 hex.

p8608 CBC clear bus off error / Clear bus off err

CU_S (CAN)	**Can be changed:** U, T		**Access level:** 3
	Data type: Integer16	**Data set:** -	**Function diagram:** -
	P-Group: -	**Units group:** -	**Unit selection:** -
	Min	**Max**	**Factory setting**
	0	1	0

Description: For a bus off error, the CAN bus is restarted with p8608 = 1 after the cause of the error has been removed.

Values: 0: not active
1: Start CAN controller

Note: This parameter is automatically reset to 0 after start.

p8609[0...1] CBC error behavior / Error behavior

CU_S (CAN)	**Can be changed:** T		**Access level:** 3
	Data type: Integer16	**Data set:** -	**Function diagram:** -
	P-Group: -	**Units group:** -	**Unit selection:** -
	Min	**Max**	**Factory setting**
	0	2	1

Description: Sets the behavior of the CAN node referred to the communications error or equipment fault.

Values: 0: Pre-operational
1: No change
2: Stopped

Index: [0] = Behavior for communication errors
[1] = Behavior for device faults

Note: Corresponds to the CANopen object 1029 hex.

r8610[0...1] CBC first server SDO / First server SDO

CU_S (CAN)	**Can be changed:** -		**Access level:** 3
	Data type: Unsigned32	**Data set:** -	**Function diagram:** -
	P-Group: Communications	**Units group:** -	**Unit selection:** -
	Min	**Max**	**Factory setting**
	-	-	-

Description: Displays the identifier (client/server and server/client) of the SDO channel.

Index: [0] = Displays the COB ID from client to server
[1] = Displays the COB ID from server to client

Note: Corresponds to the CANopen object 1200 hex.
SDO: Service data object

© Siemens AG, 2005. All rights reserved

p8611[0...82] CBC pre-defined error field / Pre_def err field

CU_S (CAN)	**Can be changed:** U, T		**Access level:** 3
	Data type: Unsigned32	**Data set:** -	**Function diagram:** -
	P-Group: -	**Units group:** -	**Unit selection:** -
	Min	**Max**	**Factory setting**
	0000 hex	FFFF 1000 hex	0000 hex

Description: Displays the Pre-defined Error Field of the CAN node.

It includes the number of all errors that have occurred, the number of errors that have occurred for each drive and the errors according to their history.

The first 16 bits represent the CANopen error code and the second 16 bits the SINAMICS error code.

Index 1 has the same structure - however, the CAN offset is in the second 16 bits instead of the SINAMICS error code.

CANopen error code:

0000 hex: No error present

8110 hex: Alarm A08751 present

8120 hex: Alarm A08752 present

8130 hex: Alarm A08700(F) with alarm value = 2 present

1000 hex: Generic error 1 present (there is at least one fault outside the range 8700 ... 8799)

1001 hex: Generic error 2 present (there is at least one alarm in the range 8700 ... 8799 with the exception of A08751, A08752, A08700)

Index:
[0] = Number of all faults in the drive unit
[1] = Most recent drive number / fault number
[2] = Number of faults drive 1
[3] = Fault 1/ drive 1
[4] = Fault 2/ drive 1
[5] = Fault 3/ drive 1
[6] = Fault 4/ drive 1
[7] = Fault 5/ drive 1
[8] = Fault 6/ drive 1
[9] = Fault 7/ drive 1
[10] = Fault 8/ drive 1
[11] = Number of faults drive 2
[12] = Fault 1/ drive 2
[13] = Fault 2/ drive 2
[14] = Fault 3/ drive 2
[15] = Fault 4/ drive 2
[16] = Fault 5/ drive 2
[17] = Fault 6/ drive 2
[18] = Fault 7/ drive 2
[19] = Fault 8/ drive 2
[20] = Number of faults drive 3
[21] = Fault 1/ drive 3
[22] = Fault 2/ drive 3
[23] = Fault 3/ drive 3
[24] = Fault 4/ drive 3
[25] = Fault 5/ drive 3
[26] = Fault 6/ drive 3
[27] = Fault 7/ drive 3
[28] = Fault 8/ drive 3
[29] = Number of faults drive 4
[30] = Fault 1/ drive 4
[31] = Fault 2/ drive 4
[32] = Fault 3/ drive 4
[33] = Fault 4/ drive 4
[34] = Fault 5/ drive 4
[35] = Fault 6/ drive 4
[36] = Fault 7/ drive 4
[37] = Fault 8/ drive 4

© Siemens AG, 2005. All rights reserved

[38] = Number of faults drive 5
[39] = Fault 1/ drive 5
[40] = Fault 2/ drive 5
[41] = Fault 3/ drive 5
[42] = Fault 4/ drive 5
[43] = Fault 5/ drive 5
[44] = Fault 6/ drive 5
[45] = Fault 7/ drive 5
[46] = Fault 8/ drive 5
[47] = Number of faults drive 6
[48] = Fault 1/ drive 6
[49] = Fault 2/ drive 6
[50] = Fault 3/ drive 6
[51] = Fault 4/ drive 6
[52] = Fault 5/ drive 6
[53] = Fault 6/ drive 6
[54] = Fault 7/ drive 6
[55] = Fault 8/ drive 6
[56] = Number of faults drive 7
[57] = Fault 1/ drive 7
[58] = Fault 2/ drive 7
[59] = Fault 3/ drive 7
[60] = Fault 4/ drive 7
[61] = Fault 5/ drive 7
[62] = Fault 6/ drive 7
[63] = Fault 7/ drive 7
[64] = Fault 8/ drive 7
[65] = Number of faults drive 8
[66] = Fault 1/ drive 8
[67] = Fault 2/ drive 8
[68] = Fault 3/ drive 8
[69] = Fault 4/ drive 8
[70] = Fault 5/ drive 8
[71] = Fault 6/ drive 8
[72] = Fault 7/ drive 8
[73] = Fault 8/ drive 8
[74] = Number of faults Control Unit
[75] = Fault 1/Control Unit
[76] = Fault 2/Control Unit
[77] = Fault 3/Control Unit
[78] = Fault 4/Control Unit
[79] = Fault 5/Control Unit
[80] = Fault 6/Control Unit
[81] = Fault 7/Control Unit
[82] = Fault 8/Control Unit

© Siemens AG, 2005. All rights reserved

p8620 CBC node ID / Node ID

CU_S (CAN)	**Can be changed:** T		**Access level:** 2
	Data type: Unsigned8	**Data set:** -	**Function diagram:** -
	P-Group: -	**Units group:** -	**Unit selection:** -
	Min	**Max**	**Factory setting**
	1	126	126

Description: Display or setting of the CANopen Node ID.
The Node ID can be set as follows:
1) Using the DIP power-up the Control Unit.
--> p8620 can then only be read and displays the selected Node ID.
--> A change only becomes effective after a POWER ON.
--> CANopen Node ID and PROFIBUS address are identical.
2) Using p8620
--> only if all of the DIP switches - from S1 to S7 - are either set to ON or OFF.
--> the Node ID is set as standard to 126.
--> A change only becomes effective after save and POWER ON.

Note: Every node ID change only becomes effective after a POWER ON.
It is only possible to independently set CANopen node ID and the PROFIBUS address using p0918 and p8620 (pre-requisite: All of the DIP switches S1 to S7 are set to ON or OFF).

p8622 CBC baud rate / Baud rate

CU_S (CAN)	**Can be changed:** T		**Access level:** 3
	Data type: Integer16	**Data set:** -	**Function diagram:** -
	P-Group: -	**Units group:** -	**Unit selection:** -
	Min	**Max**	**Factory setting**
	0	7	6

Description: Setting the baud rate for the CAN bus.
The appropriate bit timings are selected that are defined in p8623 in the associated sub-index.

Values:
0: 1 Mbit/s
1: 800 kbit/s
2: 500 kbit/s
3: 250 kbit/s
4: 125 kbit/s
5: 50 kbit/s
6: 20 kbit/s
7: 10 kbit/s

Recommendation: Use the factory setting when setting the baud rate.
Example:
Baud rate = 20 kbit/s --> p8622 = 6 --> associated bit timing is in p8623[6].

Dependency: Refer to: p8623

© Siemens AG, 2005. All rights reserved

p8623[0...7] CBC bit timing selection / Bit timing select

CU_S (CAN)	**Can be changed:** T		**Access level:** 3
	Data type: Unsigned32	**Data set:** -	**Function diagram:** -
	P-Group: -	**Units group:** -	**Unit selection:** -
	Min	**Max**	**Factory setting**
	0000 hex	000F 7FFF hex	[0] 1405 hex [1] 1605 hex [2] 1C05 hex [3] 1C0B hex [4] 1C17 hex [5] 1C3B hex [6] 0002 1C15 hex [7] 0004 1C2B hex

Description: Sets the bit timing for the C_CAN controller to the associated and selected baud rate (p8622).
Bits are distributed to the following parameters of the C_CAN controller in p8623[0...7]:
Bit 0 ... 5: BRP (Baud Rate Prescaler)
Bit 6 ... 7: SJW (Synchronisation Jump Width)
Bit 8 ... 11: TSEG1 (Time Segment 1, before the sampling point)
Bit 12 ... 14: TSEG2 (Time Segment 2, after the sampling point)
Bit 15: Reserved
Bit 16 ... 19: BRPE (Baud Rate Prescaler Extension)
Bit 20 ... 31: Reserved

Index:
[0] = 1 Mbit/s
[1] = 800 kbit/s
[2] = 500 kbit/s
[3] = 250 kbit/s
[4] = 125 kbit/s
[5] = 50 kbit/s
[6] = 20 kbit/s
[7] = 10 kbit/s

Dependency: Refer to: p8622

Note: Recommendation:
You use the factory setting (refer to p8622) when setting the bit timing.
Example:
Baud rate = 20 kbit/s --> p8622 = 6 --> associated bit timing is in p8623[6] --> 0001 2FB6

© Siemens AG, 2005. All rights reserved

p8630[0...2] CBC virtual objects / Virtual objects

CU_S (CAN)	**Can be changed:** U, T		**Access level:** 3
	Data type: Unsigned16	**Data set:** -	**Function diagram:** -
	P-Group: Communications	**Units group:** -	**Unit selection:** -
	Min	**Max**	**Factory setting**
	0	65535	0

Description: Sets the drive object selection (index 0), the sub-index area (index 1) and the parameter area (index 2) when using virtual objects.
This means that it is possible to access all SINAMICS parameters via CAN.
Index 0 (drive object selection):
0: Not possible to access virtual CANopen objects
1: Device
2 ... 65535: Drive 1 ... 8
Index 1 (sub-index area):
0: 0 ... 255
1: 256 ... 511
2: 512 ... 767
3: 768 ... 1023
Index 2 (parameter area):
0: 1 ... 16383
1: 16384 ... 32768
2: 32768 ... 49152
3: 49153 ... 65535

Index: [0] = Drive object selection
[1] = Sub-index range
[2] = Parameter range

p8641 CBC abort connection option code / Abort con opt code

SERVO (CAN)	**Can be changed:** T		**Access level:** 3
	Data type: Integer16	**Data set:** -	**Function diagram:** -
	P-Group: -	**Units group:** -	**Unit selection:** -
	Min	**Max**	**Factory setting**
	0	3	3

Description: Sets the drive behavior if a CAN communication error occurs.

Values:
0: No response
1: OFF1
2: OFF2
3: OFF3

Dependency: Refer to: F08700

© Siemens AG, 2005. All rights reserved

r8680[0...36] CBC diagnostics hardware / Diagnostics HW

CU_S (CAN)	**Can be changed:** -		**Access level:** 3
	Data type: Unsigned16	**Data set:** -	**Function diagram:** -
	P-Group: Communications	**Units group:** -	**Unit selection:** -
	Min	**Max**	**Factory setting**
	-	-	-

Description: Displays the register of the CAN controller C_CAN:
Register, Message Interface Register and Message Handler Register - referred to the CAN protocol.

Index:
[0] = Control register
[1] = Status register
[2] = Error counter
[3] = Bit timing register
[4] = Interrupt register
[5] = Test register
[6] = Baud rate prescaler extension register
[7] = Interface 1 command request register
[8] = Interface 1 command mask register
[9] = Interface 1 mask 1 register
[10] = Interface 1 mask 2 register
[11] = Interface 1 arbitration 1 register
[12] = Interface 1 arbitration 2 register
[13] = Interface 1 message control register
[14] = Interface 1 data A1 register
[15] = Interface 1 data A2 register
[16] = Interface 1 data B1 register
[17] = Interface 1 data B2 register
[18] = Interface 2 command request register
[19] = Interface 2 command mask register
[20] = Interface 2 mask 1 register
[21] = Interface 2 mask 2 register
[22] = Interface 2 arbitration 1 register
[23] = Interface 2 arbitration 2 register
[24] = Interface 2 message control register
[25] = Interface 2 data A1 register
[26] = Interface 2 data A2 register
[27] = Interface 2 data B1 register
[28] = Interface 2 data B2 register
[29] = Transmission request 1 register
[30] = Transmission request 2 register
[31] = New data 1 register
[32] = New data 2 register
[33] = Interrupt pending 1 register
[34] = Interrupt pending 2 register
[35] = Message valid 1 register
[36] = Message valid 2 register

Note: A description of the individual registers of the C_CAN controller can be taken from "C_CAN User's Manual".

© Siemens AG, 2005. All rights reserved

p8685 CBC NMT states / NMT states

CU_S (CAN)	**Can be changed:** C1(1), U, T		**Access level:** 3
	Data type: Integer16	**Data set:** -	**Function diagram:** -
	P-Group: Communications	**Units group:** -	**Unit selection:** -
	Min	**Max**	**Factory setting**
	0	129	127

Description: Sets and displays the CANopen NMT state.

Values:
0: Initializing
4: Stopped
5: Operational
127: Pre-operational
128: Reset node
129: Reset Communication

Note: The value 0 (initialization) is only displayed and cannot be set.

p8700[0...1] CBC receive PDO 1 / Receive PDO 1

SERVO (CAN)	**Can be changed:** C1(3), T		**Access level:** 3
	Data type: Unsigned32	**Data set:** -	**Function diagram:** 9204, 9206
	P-Group: Communications	**Units group:** -	**Unit selection:** -
	Min	**Max**	**Factory setting**
	0000 hex	8000 06DF hex	[0] 8000 06DF hex [1] 00FE hex

Description: Sets the communication parameters for CANopen receive process data object 1 (RPDO 1).

Index: [0] = PDO COB-ID
[1] = PDO transmission type

Dependency: A valid COB-ID can only be set for the available (existing) channel.
Refer to: p8740, p8741

Note: Corresponds to the CANopen object 1400 hex + 40 hex * x (x: drive number 0 ... 7).
Transmission types 0, 1, FE and FF can be set.
PDO: Process data object

p8701[0...1] CBC receive PDO 2 / Receive PDO 2

SERVO (CAN)	**Can be changed:** C1(3), T		**Access level:** 3
	Data type: Unsigned32	**Data set:** -	**Function diagram:** 9204, 9206
	P-Group: Communications	**Units group:** -	**Unit selection:** -
	Min	**Max**	**Factory setting**
	0000 hex	8000 06DF hex	[0] 8000 06DF hex [1] 00FE hex

Description: Sets the communication parameters for CANopen receive process data object 2 (RPDO 2).

Index: [0] = PDO COB-ID
[1] = PDO transmission type

Dependency: A valid COB-ID can only be set for the available (existing) channel.
Refer to: p8740, p8741

Note: Corresponds to the CANopen object 1401 hex + 40 hex * x (x: drive number 0 ... 7).
Transmission types 0, 1, FE and FF can be set.
PDO: Process data object

© Siemens AG, 2005. All rights reserved

p8702[0...1] CBC receive PDO 3 / Receive PDO 3

SERVO (CAN)	**Can be changed:** C1(3), T		**Access level:** 3
	Data type: Unsigned32	**Data set:** -	**Function diagram:** 9204, 9206
	P-Group: Communications	**Units group:** -	**Unit selection:** -
	Min	**Max**	**Factory setting**
	0000 hex	8000 06DF hex	[0] 8000 06DF hex [1] 00FE hex

Description: Sets the communication parameters for CANopen receive process data object 3 (RPDO 3).

Index: [0] = PDO COB-ID
[1] = PDO transmission type

Dependency: A valid COB-ID can only be set for the available (existing) channel.
Refer to: p8740, p8741

Note: Corresponds to the CANopen object 1402 hex + 40 hex * x (x: drive number 0 ... 7).
Transmission types 0, 1, FE and FF can be set.
PDO: Process data object

p8703[0...1] CBC receive PDO 4 / Receive PDO 4

SERVO (CAN)	**Can be changed:** C1(3), T		**Access level:** 3
	Data type: Unsigned32	**Data set:** -	**Function diagram:** 9204, 9206
	P-Group: Communications	**Units group:** -	**Unit selection:** -
	Min	**Max**	**Factory setting**
	0000 hex	8000 06DF hex	[0] 8000 06DF hex [1] 00FE hex

Description: Sets the communication parameters for CANopen receive process data object 4 (RPDO 4).

Index: [0] = PDO COB-ID
[1] = PDO transmission type

Dependency: A valid COB-ID can only be set for the available (existing) channel.
Refer to: p8740, p8741

Note: Corresponds to the CANopen object 1403 hex + 40 hex * x (x: drive number 0 ... 7).
Transmission types 0, 1, FE and FF can be set.
PDO: Process data object

p8704[0...1] CBC receive PDO 5 / Receive PDO 5

SERVO (CAN)	**Can be changed:** C1(3), T		**Access level:** 3
	Data type: Unsigned32	**Data set:** -	**Function diagram:** 9204
	P-Group: Communications	**Units group:** -	**Unit selection:** -
	Min	**Max**	**Factory setting**
	0000 hex	8000 06DF hex	[0] 8000 06DF hex [1] 00FE hex

Description: Sets the communication parameters for CANopen receive process data object 5 (RPDO 5).

Index: [0] = PDO COB-ID
[1] = PDO transmission type

Dependency: A valid COB-ID can only be set for the available (existing) channel.
Refer to: p8740, p8741

Note: Corresponds to the CANopen object 1404 hex + 40 hex * x (x: drive number 0 ... 7).
Transmission types 0, 1, FE and FF can be set.
PDO: Process data object

© Siemens AG, 2005. All rights reserved

p8705[0...1] CBC receive PDO 6 / Receive PDO 6

SERVO (CAN)	**Can be changed:** C1(3), T		**Access level:** 3
	Data type: Unsigned32	**Data set:** -	**Function diagram:** 9204
	P-Group: Communications	**Units group:** -	**Unit selection:** -
	Min	**Max**	**Factory setting**
	0000 hex	8000 06DF hex	[0] 8000 06DF hex [1] 00FE hex

Description: Sets the communication parameters for CANopen receive process data object 6 (RPDO 6).

Index: [0] = PDO COB-ID
[1] = PDO transmission type

Dependency: A valid COB-ID can only be set for the available (existing) channel.
Refer to: p8740, p8741

Note: Corresponds to the CANopen object 1405 hex + 40 hex * x (x: drive number 0 ... 7).
Transmission types 0, 1, FE and FF can be set.
PDO: Process data object

p8706[0...1] CBC receive PDO 7 / Receive PDO 7

SERVO (CAN)	**Can be changed:** C1(3), T		**Access level:** 3
	Data type: Unsigned32	**Data set:** -	**Function diagram:** 9204
	P-Group: Communications	**Units group:** -	**Unit selection:** -
	Min	**Max**	**Factory setting**
	0000 hex	8000 06DF hex	[0] 8000 06DF hex [1] 00FE hex

Description: Sets the communication parameters for CANopen receive process data object 7 (RPDO 7).

Index: [0] = PDO COB-ID
[1] = PDO transmission type

Dependency: A valid COB-ID can only be set for the available (existing) channel.
Refer to: p8740, p8741

Note: Corresponds to the CANopen object 1406 hex + 40 hex * x (x: drive number 0 ... 7).
Transmission types 0, 1, FE and FF can be set.
PDO: Process data object

p8707[0...1] CBC receive PDO 8 / Receive PDO 8

SERVO (CAN)	**Can be changed:** C1(3), T		**Access level:** 3
	Data type: Unsigned32	**Data set:** -	**Function diagram:** 9204
	P-Group: Communications	**Units group:** -	**Unit selection:** -
	Min	**Max**	**Factory setting**
	0000 hex	8000 06DF hex	[0] 8000 06DF hex [1] 00FE hex

Description: Sets the communication parameters for CANopen receive process data object 8 (RPDO 8).

Index: [0] = PDO COB-ID
[1] = PDO transmission type

Dependency: A valid COB-ID can only be set for the available (existing) channel.
Refer to: p8740, p8741

Note: Corresponds to the CANopen object 1407 hex + 40 hex * x (x: drive number 0 ... 7).
Transmission types 0, 1, FE and FF can be set.
PDO: Process data object

© Siemens AG, 2005. All rights reserved

p8710[0...3] CBC receive mapping for RPDO 1 / Mapping RPDO 1

SERVO (CAN)	**Can be changed:** C1(3), T		**Access level:** 3
	Data type: Unsigned32	**Data set:** -	**Function diagram:** 9204, 9206
	P-Group: Communications	**Units group:** -	**Unit selection:** -
	Min	**Max**	**Factory setting**
	0000 hex	FFFF FFFF hex	0000 hex

Description: Sets the mapping parameters for CANopen receive process data object 1 (RPDO 1).

Index: [0] = Mapped object 1
[1] = Mapped object 2
[2] = Mapped object 3
[3] = Mapped object 4

Note: Corresponds to the CANopen object 1600 hex + 40 hex * x (x: drive number 0 ... 7).
Dummy mapping not supported.

p8711[0...3] CBC receive mapping for RPDO 2 / Mapping RPDO 2

SERVO (CAN)	**Can be changed:** C1(3), T		**Access level:** 3
	Data type: Unsigned32	**Data set:** -	**Function diagram:** 9204, 9206
	P-Group: Communications	**Units group:** -	**Unit selection:** -
	Min	**Max**	**Factory setting**
	0000 hex	FFFF FFFF hex	0000 hex

Description: Sets the mapping parameters for CANopen receive process data object 2 (RPDO 2).

Index: [0] = Mapped object 1
[1] = Mapped object 2
[2] = Mapped object 3
[3] = Mapped object 4

Note: Corresponds to the CANopen object 1601 hex + 40 hex * x (x: drive number 0 ... 7).
Dummy mapping not supported.

p8712[0...3] CBC receive mapping for RPDO 3 / Mapping RPDO 3

SERVO (CAN)	**Can be changed:** C1(3), T		**Access level:** 3
	Data type: Unsigned32	**Data set:** -	**Function diagram:** 9204, 9206
	P-Group: Communications	**Units group:** -	**Unit selection:** -
	Min	**Max**	**Factory setting**
	0000 hex	FFFF FFFF hex	0000 hex

Description: Sets the mapping parameters for CANopen receive process data object 3 (RPDO 3).

Index: [0] = Mapped object 1
[1] = Mapped object 2
[2] = Mapped object 3
[3] = Mapped object 4

Note: Corresponds to the CANopen object 1602 hex + 40 hex * x (x: drive number 0 ... 7).
Dummy mapping not supported.

© Siemens AG, 2005. All rights reserved

p8713[0...3] CBC receive mapping for RPDO 4 / Mapping RPDO 4

SERVO (CAN)	**Can be changed:** C1(3), T		**Access level:** 3
	Data type: Unsigned32	**Data set:** -	**Function diagram:** 9204, 9206
	P-Group: Communications	**Units group:** -	**Unit selection:** -
	Min	**Max**	**Factory setting**
	0000 hex	FFFF FFFF hex	0000 hex

Description: Sets the mapping parameters for CANopen receive process data object 4 (RPDO 4).

Index: [0] = Mapped object 1
[1] = Mapped object 2
[2] = Mapped object 3
[3] = Mapped object 4

Note: Corresponds to the CANopen object 1603 hex + 40 hex * x (x: drive number 0 ... 7).
Dummy mapping not supported.

p8714[0...3] CBC receive mapping for RPDO 5 / Mapping RPDO 5

SERVO (CAN)	**Can be changed:** C1(3), T		**Access level:** 3
	Data type: Unsigned32	**Data set:** -	**Function diagram:** 9204
	P-Group: Communications	**Units group:** -	**Unit selection:** -
	Min	**Max**	**Factory setting**
	0000 hex	FFFF FFFF hex	0000 hex

Description: Sets the mapping parameters for CANopen receive process data object 5 (RPDO 5).

Index: [0] = Mapped object 1
[1] = Mapped object 2
[2] = Mapped object 3
[3] = Mapped object 4

Note: Corresponds to the CANopen object 1604 hex + 40 hex * x (x: drive number 0 ... 7).
Dummy mapping not supported.

p8715[0...3] CBC receive mapping for RPDO 6 / Mapping RPDO 6

SERVO (CAN)	**Can be changed:** C1(3), T		**Access level:** 3
	Data type: Unsigned32	**Data set:** -	**Function diagram:** 9204
	P-Group: Communications	**Units group:** -	**Unit selection:** -
	Min	**Max**	**Factory setting**
	0000 hex	FFFF FFFF hex	0000 hex

Description: Sets the mapping parameters for CANopen receive process data object 6 (RPDO 6).

Index: [0] = Mapped object 1
[1] = Mapped object 2
[2] = Mapped object 3
[3] = Mapped object 4

Note: Corresponds to the CANopen object 1605 hex + 40 hex * x (x: drive number 0 ... 7).
Dummy mapping not supported.

© Siemens AG, 2005. All rights reserved

p8716[0...3] CBC receive mapping for RPDO 7 / Mapping RPDO 7

SERVO (CAN)	**Can be changed:** C1(3), T		**Access level:** 3
	Data type: Unsigned32	**Data set:** -	**Function diagram:** 9204
	P-Group: Communications	**Units group:** -	**Unit selection:** -
	Min	**Max**	**Factory setting**
	0000 hex	FFFF FFFF hex	0000 hex

Description: Sets the mapping parameters for CANopen receive process data object 7 (RPDO 7).

Index: [0] = Mapped object 1
[1] = Mapped object 2
[2] = Mapped object 3
[3] = Mapped object 4

Note: Corresponds to the CANopen object 1606 hex + 40 hex * x (x: drive number 0 ... 7).
Dummy mapping not supported.

p8717[0...3] CBC receive mapping for RPDO 8 / Mapping RPDO 8

SERVO (CAN)	**Can be changed:** C1(3), T		**Access level:** 3
	Data type: Unsigned32	**Data set:** -	**Function diagram:** 9204
	P-Group: Communications	**Units group:** -	**Unit selection:** -
	Min	**Max**	**Factory setting**
	0000 hex	FFFF FFFF hex	0000 hex

Description: Sets the mapping parameters for CANopen receive process data object 8 (RPDO 8).

Index: [0] = Mapped object 1
[1] = Mapped object 2
[2] = Mapped object 3
[3] = Mapped object 4

Note: Corresponds to the CANopen object 1607 hex + 40 hex * x (x: drive number 0 ... 7).
Dummy mapping not supported.

p8720[0...4] CBC transmit PDO 1 / Transmit PDO 1

SERVO (CAN)	**Can be changed:** C1(3), T		**Access level:** 3
	Data type: Unsigned32	**Data set:** -	**Function diagram:** 9208, 9210
	P-Group: Communications	**Units group:** -	**Unit selection:** -
	Min	**Max**	**Factory setting**
	0000 hex	C000 06DF hex	[0] C000 06DF hex [1] 00FE hex [2] 0000 hex [3] 0000 hex [4] 0000 hex

Description: Sets the communication parameters for CANopen transmit process data object 1 (TPDO 1).

Index: [0] = PDO COB-ID
[1] = PDO transmission type
[2] = Inhibit time (in 100 μs)
[3] = Reserved
[4] = Event timer (in ms)

Dependency: A valid COB-ID can only be set for the available (existing) channel.
Refer to: p8740, p8741

Notice: For inhibit time and even timer, the following apply:
A value that is not a multiple integer of CANopen (4 ms) is rounded-off.

Note: Corresponds to the CANopen object 1800 hex + 40 hex * x (x: drive number 0 ... 7).
Transmission types 0, 1 ... F0, FE and FF can be set.
PDO: Process data object

© Siemens AG, 2005. All rights reserved

p8721[0...4] CBC transmit PDO 2 / Transmit PDO 2

SERVO (CAN)	**Can be changed:** C1(3), T		**Access level:** 3
	Data type: Unsigned32	**Data set:** -	**Function diagram:** 9208, 9210
	P-Group: Communications	**Units group:** -	**Unit selection:** -
	Min	**Max**	**Factory setting**
	0000 hex	C000 06DF hex	[0] C000 06DF hex [1] 00FE hex [2] 0000 hex [3] 0000 hex [4] 0000 hex

Description: Sets the communication parameters for CANopen transmit process data object 2 (TPDO 2).

Index: [0] = PDO COB-ID
[1] = PDO transmission type
[2] = Inhibit time (in 100 μs)
[3] = Reserved
[4] = Event timer (in ms)

Dependency: A valid COB-ID can only be set for the available (existing) channel.
Refer to: p8740, p8741

Notice: For inhibit time and even timer, the following apply:
A value that is not a multiple integer of CANopen (4 ms) is rounded-off.

Note: Corresponds to the CANopen object 1801 hex + 40 hex * x (x: drive number 0 ... 7).
Transmission types 0, 1 ... F0, FE and FF can be set.
PDO: Process data object

p8722[0...4] CBC transmit PDO 3 / Transmit PDO 3

SERVO (CAN)	**Can be changed:** C1(3), T		**Access level:** 3
	Data type: Unsigned32	**Data set:** -	**Function diagram:** 9208, 9210
	P-Group: Communications	**Units group:** -	**Unit selection:** -
	Min	**Max**	**Factory setting**
	0000 hex	C000 06DF hex	[0] C000 06DF hex [1] 00FE hex [2] 0000 hex [3] 0000 hex [4] 0000 hex

Description: Sets the communication parameters for CANopen transmit process data object 3 (TPDO 3).

Index: [0] = PDO COB-ID
[1] = PDO transmission type
[2] = Inhibit time (in 100 μs)
[3] = Reserved
[4] = Event timer (in ms)

Dependency: A valid COB-ID can only be set for the available (existing) channel.
Refer to: p8740, p8741

Notice: For inhibit time and even timer, the following apply:
A value that is not a multiple integer of CANopen (4 ms) is rounded-off.

Note: Corresponds to the CANopen object 1802 hex + 40 hex * x (x: drive number 0 ... 7).
Transmission types 0, 1 ... F0, FE and FF can be set.
PDO: Process data object

© Siemens AG, 2005. All rights reserved

p8723[0...4] CBC transmit PDO 4 / Transmit PDO 4

SERVO (CAN)	**Can be changed:** C1(3), T		**Access level:** 3
	Data type: Unsigned32	**Data set:** -	**Function diagram:** 9208, 9210
	P-Group: Communications	**Units group:** -	**Unit selection:** -
	Min	**Max**	**Factory setting**
	0000 hex	C000 06DF hex	[0] C000 06DF hex [1] 00FE hex [2] 0000 hex [3] 0000 hex [4] 0000 hex

Description: Sets the communication parameters for CANopen transmit process data object 4 (TPDO 4).

Index: [0] = PDO COB-ID
[1] = PDO transmission type
[2] = Inhibit time (in 100 μs)
[3] = Reserved
[4] = Event timer (in ms)

Dependency: A valid COB-ID can only be set for the available (existing) channel.
Refer to: p8740, p8741

Notice: For inhibit time and even timer, the following apply:
A value that is not a multiple integer of CANopen (4 ms) is rounded-off.

Note: Corresponds to the CANopen object 1803 hex + 40 hex * x (x: drive number 0 ... 7).
Transmission types 0, 1 ... F0, FE and FF can be set.
PDO: Process data object

p8724[0...4] CBC transmit PDO 5 / Transmit PDO 5

SERVO (CAN)	**Can be changed:** C1(3), T		**Access level:** 3
	Data type: Unsigned32	**Data set:** -	**Function diagram:** 9208
	P-Group: Communications	**Units group:** -	**Unit selection:** -
	Min	**Max**	**Factory setting**
	0000 hex	C000 06DF hex	[0] C000 06DF hex [1] 00FE hex [2] 0000 hex [3] 0000 hex [4] 0000 hex

Description: Sets the communication parameters for CANopen transmit process data object 5 (TPDO 5).

Index: [0] = PDO COB-ID
[1] = PDO transmission type
[2] = Inhibit time (in 100 μs)
[3] = Reserved
[4] = Event timer (in ms)

Dependency: A valid COB-ID can only be set for the available (existing) channel.
Refer to: p8740, p8741

Notice: For inhibit time and even timer, the following apply:
A value that is not a multiple integer of CANopen (4 ms) is rounded-off.

Note: Corresponds to the CANopen object 1804 hex + 40 hex * x (x: drive number 0 ... 7).
Transmission types 0, 1 ... F0, FE and FF can be set.
PDO: Process data object

© Siemens AG, 2005. All rights reserved

p8725[0...4] CBC transmit PDO 6 / Transmit PDO 6

SERVO (CAN)	**Can be changed:** C1(3), T		**Access level:** 3
	Data type: Unsigned32	**Data set:** -	**Function diagram:** 9208
	P-Group: Communications	**Units group:** -	**Unit selection:** -
	Min	**Max**	**Factory setting**
	0000 hex	C000 06DF hex	[0] C000 06DF hex [1] 00FE hex [2] 0000 hex [3] 0000 hex [4] 0000 hex

Description: Sets the communication parameters for CANopen transmit process data object 6 (TPDO 6).

Index: [0] = PDO COB-ID
[1] = PDO transmission type
[2] = Inhibit time (in 100 μs)
[3] = Reserved
[4] = Event timer (in ms)

Dependency: A valid COB-ID can only be set for the available (existing) channel.
Refer to: p8740, p8741

Notice: For inhibit time and even timer, the following apply:
A value that is not a multiple integer of CANopen (4 ms) is rounded-off.

Note: Corresponds to the CANopen object 1805 hex + 40 hex * x (x: drive number 0 ... 7).
Transmission types 0, 1 ... F0, FE and FF can be set.
PDO: Process data object

p8726[0...4] CBC transmit PDO 7 / Transmit PDO 7

SERVO (CAN)	**Can be changed:** C1(3), T		**Access level:** 3
	Data type: Unsigned32	**Data set:** -	**Function diagram:** 9208
	P-Group: Communications	**Units group:** -	**Unit selection:** -
	Min	**Max**	**Factory setting**
	0000 hex	C000 06DF hex	[0] C000 06DF hex [1] 00FE hex [2] 0000 hex [3] 0000 hex [4] 0000 hex

Description: Sets the communication parameters for CANopen transmit process data object 7 (TPDO 7).

Index: [0] = PDO COB-ID
[1] = PDO transmission type
[2] = Inhibit time (in 100 μs)
[3] = Reserved
[4] = Event timer (in ms)

Dependency: A valid COB-ID can only be set for the available (existing) channel.
Refer to: p8740, p8741

Notice: For inhibit time and even timer, the following apply:
A value that is not a multiple integer of CANopen (4 ms) is rounded-off.

Note: Corresponds to the CANopen object 1806 hex + 40 hex * x (x: drive number 0 ... 7).
Transmission types 0, 1 ... F0, FE and FF can be set.
PDO: Process data object

© Siemens AG, 2005. All rights reserved

p8727[0...4] CBC transmit PDO 8 / Transmit PDO 8

SERVO (CAN)	**Can be changed:** C1(3), T		**Access level:** 3
	Data type: Unsigned32	**Data set:** -	**Function diagram:** 9208
	P-Group: Communications	**Units group:** -	**Unit selection:** -
	Min	**Max**	**Factory setting**
	0000 hex	C000 06DF hex	[0] C000 06DF hex [1] 00FE hex [2] 0000 hex [3] 0000 hex [4] 0000 hex

Description: Sets the communication parameters for CANopen transmit process data object 8 (TPDO 8).

Index: [0] = PDO COB-ID
[1] = PDO transmission type
[2] = Inhibit time (in 100 μs)
[3] = Reserved
[4] = Event timer (in ms)

Dependency: A valid COB-ID can only be set for the available (existing) channel.
Refer to: p8740, p8741

Notice: For inhibit time and even timer, the following apply:
A value that is not a multiple integer of CANopen (4 ms) is rounded-off.

Note: Corresponds to the CANopen object 1807 hex + 40 hex * x (x: drive number 0 ... 7).
Transmission types 0, 1 ... F0, FE and FF can be set.
PDO: Process data object

p8730[0...3] CBC send mapping for TPDO 1 / Mapping TPDO 1

SERVO (CAN)	**Can be changed:** C1(3), T		**Access level:** 3
	Data type: Unsigned32	**Data set:** -	**Function diagram:** 9208, 9210
	P-Group: Communications	**Units group:** -	**Unit selection:** -
	Min	**Max**	**Factory setting**
	0000 hex	FFFF FFFF hex	0000 hex

Description: Sets the mapping parameters for CANopen transmit process data object 1 (TPDO 1).

Index: [0] = Mapped object 1
[1] = Mapped object 2
[2] = Mapped object 3
[3] = Mapped object 4

Note: Corresponds to the CANopen object 1A00 hex + 40 hex * x (x: drive number 0 ... 7).

p8731[0...3] CBC send mapping for TPDO 2 / Mapping TPDO 2

SERVO (CAN)	**Can be changed:** C1(3), T		**Access level:** 3
	Data type: Unsigned32	**Data set:** -	**Function diagram:** 9208, 9210
	P-Group: Communications	**Units group:** -	**Unit selection:** -
	Min	**Max**	**Factory setting**
	0000 hex	FFFF FFFF hex	0000 hex

Description: Sets the mapping parameters for CANopen transmit process data object 2 (TPDO 2).

Index: [0] = Mapped object 1
[1] = Mapped object 2
[2] = Mapped object 3
[3] = Mapped object 4

Note: Corresponds to the CANopen object 1A01 hex + 40 hex * x (x: drive number 0 ... 7).

© Siemens AG, 2005. All rights reserved

p8732[0...3] CBC send mapping for TPDO 3 / Mapping TPDO 3

SERVO (CAN)	**Can be changed:** C1(3), T		**Access level:** 3
	Data type: Unsigned32	**Data set:** -	**Function diagram:** 9208, 9210
	P-Group: Communications	**Units group:** -	**Unit selection:** -
	Min	**Max**	**Factory setting**
	0000 hex	FFFF FFFF hex	0000 hex

Description: Sets the mapping parameters for CANopen transmit process data object 3 (TPDO 3).

Index: [0] = Mapped object 1
[1] = Mapped object 2
[2] = Mapped object 3
[3] = Mapped object 4

Note: Corresponds to the CANopen object 1A02 hex + 40 hex * x (x: drive number 0 ... 7).

p8733[0...3] CBC send mapping for TPDO 4 / Mapping TPDO 4

SERVO (CAN)	**Can be changed:** C1(3), T		**Access level:** 3
	Data type: Unsigned32	**Data set:** -	**Function diagram:** 9208, 9210
	P-Group: Communications	**Units group:** -	**Unit selection:** -
	Min	**Max**	**Factory setting**
	0000 hex	FFFF FFFF hex	0000 hex

Description: Sets the mapping parameters for CANopen transmit process data object 4 (TPDO 4).

Index: [0] = Mapped object 1
[1] = Mapped object 2
[2] = Mapped object 3
[3] = Mapped object 4

Note: : drive number 0 ... 7).

p8734[0...3] CBC send mapping for TPDO 5 / Mapping TPDO 5

SERVO (CAN)	**Can be changed:** C1(3), T		**Access level:** 3
	Data type: Unsigned32	**Data set:** -	**Function diagram:** 9208
	P-Group: Communications	**Units group:** -	**Unit selection:** -
	Min	**Max**	**Factory setting**
	0000 hex	FFFF FFFF hex	0000 hex

Description: Sets the mapping parameters for CANopen transmit process data object 5 (TPDO 5).

Index: [0] = Mapped object 1
[1] = Mapped object 2
[2] = Mapped object 3
[3] = Mapped object 4

Note: Corresponds to the CANopen object 1A04 hex + 40 hex * x (x: drive number 0 ... 7).

© Siemens AG, 2005. All rights reserved

p8735[0...3] CBC send mapping for TPDO 6 / Mapping TPDO 6

SERVO (CAN)	**Can be changed:** C1(3), T		**Access level:** 3
	Data type: Unsigned32	**Data set:** -	**Function diagram:** 9208
	P-Group: Communications	**Units group:** -	**Unit selection:** -
	Min	**Max**	**Factory setting**
	0000 hex	FFFF FFFF hex	0000 hex

Description: Sets the mapping parameters for CANopen transmit process data object 6 (TPDO 6).

Index: [0] = Mapped object 1
[1] = Mapped object 2
[2] = Mapped object 3
[3] = Mapped object 4

Note: Corresponds to the CANopen object 1A05 hex + 40 hex * x (x: drive number 0 ... 7).

p8736[0...3] CBC send mapping for TPDO 7 / Mapping TPDO 7

SERVO (CAN)	**Can be changed:** C1(3), T		**Access level:** 3
	Data type: Unsigned32	**Data set:** -	**Function diagram:** 9208
	P-Group: Communications	**Units group:** -	**Unit selection:** -
	Min	**Max**	**Factory setting**
	0000 hex	FFFF FFFF hex	0000 hex

Description: Sets the mapping parameters for CANopen transmit process data object 7 (TPDO 7).

Index: [0] = Mapped object 1
[1] = Mapped object 2
[2] = Mapped object 3
[3] = Mapped object 4

Note: Corresponds to the CANopen object 1A06 hex + 40 hex * x (x: drive number 0 ... 7).

p8737[0...3] CBC send mapping for TPDO 8 / Mapping TPDO 8

SERVO (CAN)	**Can be changed:** C1(3), T		**Access level:** 3
	Data type: Unsigned32	**Data set:** -	**Function diagram:** 9208
	P-Group: Communications	**Units group:** -	**Unit selection:** -
	Min	**Max**	**Factory setting**
	0000 hex	FFFF FFFF hex	0000 hex

Description: Sets the mapping parameters for CANopen transmit process data object 8 (TPDO 8).

Index: [0] = Mapped object 1
[1] = Mapped object 2
[2] = Mapped object 3
[3] = Mapped object 4

Note: Corresponds to the CANopen object 1A07 hex + 40 hex * x (x: drive number 0 ... 7).

p8740[0...23] CBC channel assignment / Chann assign.

CU_S (CAN)	**Can be changed:** T		**Access level:** 3
	Data type: Unsigned16	**Data set:** -	**Function diagram:** -
	P-Group: -	**Units group:** -	**Unit selection:** -
	Min	**Max**	**Factory setting**
	0	8	0

Description: Sets the number of channels for receive PDOs and Transmit PDOs.
To define the number of channels of a drive, there are 3 indices (3 * n indices, n = 8).
Index 0: Number of channels for receive PDOs (drive 1)
Index 1: Number of channels for transmit PDOs (drive 1)
Index 2: Reserved
Correspondingly, indices 3 to 5 are valid for the 2nd drive, etc.

© Siemens AG, 2005. All rights reserved

Index: [0] = Number of channels for receive PDOs (drive 1)
[1] = Number of channels for transmit PDOs (drive 1)
[2] = Reserved
[3] = Number of channels for receive PDOs (drive 2)
[4] = Number of channels for transmit PDOs (drive 2)
[5] = Reserved
[6] = Number of channels for receive PDOs (drive 3)
[7] = Number of channels for transmit PDOs (drive 3)
[8] = Reserved
[9] = Number of channels for receive PDOs (drive 4)
[10] = Number of channels for transmit PDOs (drive 4)
[11] = Reserved
[12] = Number of channels for receive PDOs (drive 5)
[13] = Number of channels for transmit PDOs (drive 5)
[14] = Reserved
[15] = Number of channels for receive PDOs (drive 6)
[16] = Number of channels for transmit PDOs (drive 6)
[17] = Reserved
[18] = Number of channels for receive PDOs (drive 7)
[19] = Number of channels for transmit PDOs (drive 7)
[20] = Reserved
[21] = Number of channels for receive PDOs (drive 8)
[22] = Number of channels for transmit PDOs (drive 8)
[23] = Reserved

Dependency: Refer to: p8741

Note: Channel assignment not yet in effect. To acknowledge set p8741 = 1.

p8741 CBC PDO configuration acknowledgement / PDO config ackn

CU_S (CAN)

Can be changed: T		**Access level:** 3
Data type: Integer16	**Data set:** -	**Function diagram:** -
P-Group: -	**Units group:** -	**Unit selection:** -
Min	**Max**	**Factory setting**
0	1	0

Description: Acknowledges the channel distribution selection made (p8740) and the setting of the predefined connection sets (p8744).

Values:
0: not active
1: Acknowledge configuration

Dependency: Refer to: p8740

r8742 CBC number of free RPDO channels / No. of free RPDO

CU_S (CAN)

Can be changed: -		**Access level:** 3
Data type: Unsigned16	**Data set:** -	**Function diagram:** -
P-Group: Communications	**Units group:** -	**Unit selection:** -
Min	**Max**	**Factory setting**
-	-	-

Description: Displays the RPDO channels that are still available.

Dependency: Refer to: p8741

Note: The display is updated after acknowledging the configuration (p8741 = 1).
RPDO: Receive Process Data Object

© Siemens AG, 2005. All rights reserved

r8743[0...7] CBC assignment, drive ID / Drive ID

CU_S (CAN)	**Can be changed:** -		**Access level:** 3
	Data type: Unsigned16	**Data set:** -	**Function diagram:** -
	P-Group: -	**Units group:** -	**Unit selection:** -
	Min	**Max**	**Factory setting**
	-	-	-

Description: Displays the drive ID associated with each drive.

Index:
[0] = Drive ID for 1st drive
[1] = Drive ID for 2nd drive
[2] = Drive ID for 3rd drive
[3] = Drive ID for 4th drive
[4] = Drive ID for 5th drive
[5] = Drive ID for 6th drive
[6] = Drive ID for 7th drive
[7] = Drive ID for 8th drive

p8744 CBC PDO mapping configuration / PDO Mapping conf.

SERVO (CAN)	**Can be changed:** C2, T		**Access level:** 2
	Data type: Integer16	**Data set:** -	**Function diagram:** 9204, 9206, 9208, 9210
	P-Group: -	**Units group:** -	**Unit selection:** -
	Min	**Max**	**Factory setting**
	0	2	2

Description: Selector switch for the PDO mapping.
Sets the mapping for download or in the online mode after acknowledging with p8741.

Values:
0: Must be set before making changes
1: Predefined Connection Set
2: Free PDO Mapping

r8750[0...15] CBC mapped 16-bit receive objects / RPDO 16 mapped

SERVO (CAN)	**Can be changed:** -		**Access level:** 3
	Data type: Unsigned16	**Data set:** -	**Function diagram:** -
	P-Group: Communications	**Units group:** -	**Unit selection:** -
	Min	**Max**	**Factory setting**
	-	-	-

Description: Displays 16-bit receive CANopen objects mapped to process data buffer.
Example:
The control word is mapped in p8720[0] and p8721[0]; this means that r8750[0] indicates that it is located at the first position (p8850[0]) in the process data buffer.

Index:
[0] = PZD 1
[1] = PZD 2
[2] = PZD 3
[3] = PZD 4
[4] = PZD 5
[5] = PZD 6
[6] = PZD 7
[7] = PZD 8
[8] = PZD 9
[9] = PZD 10
[10] = PZD 11
[11] = PZD 12
[12] = PZD 13
[13] = PZD 14
[14] = PZD 15
[15] = PZD 16

© Siemens AG, 2005. All rights reserved

r8751[0...15] CBC mapped 16-bit transmit objects / TPDO 16 mapped

SERVO (CAN)	**Can be changed:** -		**Access level:** 3
	Data type: Unsigned16	**Data set:** -	**Function diagram:** -
	P-Group: Communications	**Units group:** -	**Unit selection:** -
	Min	**Max**	**Factory setting**
	-	-	-

Description: Displays mapped 16-bit transmit CANopen objects in the process data buffer.

Index:
[0] = PZD 1
[1] = PZD 2
[2] = PZD 3
[3] = PZD 4
[4] = PZD 5
[5] = PZD 6
[6] = PZD 7
[7] = PZD 8
[8] = PZD 9
[9] = PZD 10
[10] = PZD 11
[11] = PZD 12
[12] = PZD 13
[13] = PZD 14
[14] = PZD 15
[15] = PZD 16

Dependency: Refer to: r8750

r8760[0...14] CBC mapped 32-bit receive objects / RPDO 32 mapped

SERVO (CAN)	**Can be changed:** -		**Access level:** 3
	Data type: Unsigned16	**Data set:** -	**Function diagram:** -
	P-Group: Communications	**Units group:** -	**Unit selection:** -
	Min	**Max**	**Factory setting**
	-	-	-

Description: Displays 32-bit receive CANopen objects mapped to process data buffer.

Index:
[0] = PZD 1 + 2
[1] = PZD 2 + 3
[2] = PZD 3 + 4
[3] = PZD 4 + 5
[4] = PZD 5 + 6
[5] = PZD 6 + 7
[6] = PZD 7 + 8
[7] = PZD 8 + 9
[8] = PZD 9 +10
[9] = PZD 10 + 11
[10] = PZD 11 + 12
[11] = PZD 12 + 13
[12] = PZD 13 + 14
[13] = PZD 14 + 15
[14] = PZD 15 + 16

© Siemens AG, 2005. All rights reserved

r8761[0...14] CBC mapped 32-bit transmit objects / TPDO 32 mapped

SERVO (CAN)

Can be changed: -		**Access level:** 3
Data type: Unsigned16	**Data set:** -	**Function diagram:** -
P-Group: Communications	**Units group:** -	**Unit selection:** -
Min	**Max**	**Factory setting**
-	-	-

Description: Displays mapped 32-bit transmit CANopen objects in the process data buffer.

Index:
[0] = PZD 1 + 2
[1] = PZD 2 + 3
[2] = PZD 3 + 4
[3] = PZD 4 + 5
[4] = PZD 5 + 6
[5] = PZD 6 + 7
[6] = PZD 7 + 8
[7] = PZD 8 + 9
[8] = PZD 9 +10
[9] = PZD 10 + 11
[10] = PZD 11 + 12
[11] = PZD 12 + 13
[12] = PZD 13 + 14
[13] = PZD 14 + 15
[14] = PZD 15 + 16

r8784 CO: CBC status word / Status word

SERVO (CAN)

Can be changed: -		**Access level:** 3
Data type: Unsigned16	**Data set:** -	**Function diagram:** 8010
P-Group: Communications	**Units group:** -	**Unit selection:** -
Min	**Max**	**Factory setting**
-	-	-

Description: Displays the CANopen status word.

Bit field:

Bit	Signal name	0 signal	1 signal	FP
00	Ready to power up	No	Yes	-
01	Ready	No	Yes	-
02	Operation enabled	No	Yes	-
03	Fault present	No	Yes	-
04	No coasting active	No	Yes	-
05	No fast stop active	No	Yes	-
06	Power-on inhibit active	No	Yes	-
07	Alarm present	No	Yes	-
08	Can be freely interconnected (BI: p8785)	Low	High	-
09	Control from PLC	No	Yes	-
10	Target reached	No	Yes	-
11	Torq limit reached	No	Yes	-
12	Velocity equal to zero	No	Yes	-
14	Can be freely interconnected (BI: p8786)	Low	High	-
15	Can be freely interconnected (BI: p8787)	Low	High	-

Note: Corresponds to the CANopen object 6041 hex + 800 hex * : drive number 0 ... 7).

Re bit 10:

When the ramp-function generator is activated, the interconnection from CI: p2151 = r1119 can be changed, so that to evaluate bit 10, the setpoint can be retrieved (taken) from in front of the ramp-function generator.

Re bit 10, 12:

When braking, the two bits must indicate the same state. This is the reason that the following parameters must be set the same:

p2161 (speed threshold value 3, for r2199.0) = p2163 (speed threshold value 4, for r2197.7)

p2150 (hysteresis speed 3, for r2199.0) = p2164 (hysteresis speed 4, for r2197.7)

© Siemens AG, 2005. All rights reserved

p8785 BI: CBC status word bit 8 / Status word bit 8

SERVO (CAN)	**Can be changed:** T		**Access level:** 3
	Data type: Unsigned32	**Data set:** -	**Function diagram:** -
	P-Group: Communications	**Units group:** -	**Unit selection:** -
	Min	**Max**	**Factory setting**
	-	-	0

Description: Binector input for CANopen status word bit 8.
Dependency: Refer to: r8784

p8786 BI: CBC status word bit 14 / Status word bit 14

SERVO (CAN)	**Can be changed:** T		**Access level:** 3
	Data type: Unsigned32	**Data set:** -	**Function diagram:** -
	P-Group: Communications	**Units group:** -	**Unit selection:** -
	Min	**Max**	**Factory setting**
	-	-	0

Description: Binector input for CANopen status word bit 14.
Dependency: Refer to: r8784

p8787 BI: CBC status word bit 15 / Status word bit 15

SERVO (CAN)	**Can be changed:** T		**Access level:** 3
	Data type: Unsigned32	**Data set:** -	**Function diagram:** -
	P-Group: Communications	**Units group:** -	**Unit selection:** -
	Min	**Max**	**Factory setting**
	-	-	0

Description: Binector input for CANopen status word bit 15.
Dependency: Refer to: r8784

p8790 CBC control word - auto interconnection / STW_interconn.auto

SERVO (CAN)	**Can be changed:** C1(3), T		**Access level:** 3
	Data type: Integer16	**Data set:** -	**Function diagram:** -
	P-Group: Communications	**Units group:** -	**Unit selection:** -
	Min	**Max**	**Factory setting**
	0	1	0

Description: Sets the automatic BICO interconnection of the CANopen control word.
Values:
0: No interconn
1: Interconnection
Dependency: Refer to: r8750, r8795, r8850
Note: The following BICO interconnections are automatically established if the CANopen control word is mapped at one of the locations x = 0 ... 3 in the receive process data buffer.
BI: p0840.0 = r889x.0
BI: p0844.0 = r889x.1
BI: p0848.0 = r889x.2
BI: p0852.0 = r889x.3
BI: p2103.0 = r889x.7

© Siemens AG, 2005. All rights reserved

r8795 CBC control word / Control word

SERVO (CAN)

Can be changed: -
Access level: 3
Data type: Unsigned16
Data set: -
Function diagram: -
P-Group: -
Units group: -
Unit selection: -

Min	Max	Factory setting
-	-	-

Description: Access to the CANopen control word using SDO transfer.

Bit field:

Bit	Signal name	0 signal	1 signal	FP
00	ON/OFF1	No	Yes	-
01	Do not activate coast down	No	Yes	-
02	Do not activate a fast stop	No	Yes	-
03	Enable operation	No	Yes	-
07	Acknowledge fault	No	Yes	-
11	Can be freely interconnected	Low	High	-
12	Can be freely interconnected	Low	High	-
13	Can be freely interconnected	Low	High	-
14	Can be freely interconnected	Low	High	-
15	Can be freely interconnected	Low	High	-

Dependency: Refer to: p8790
Note: Corresponds to the CANopen object 6040 hex +800 hex * x (x: drive number 0 ... 7).

r8796 CBC target velocity / Target velocity

SERVO (CAN)

Can be changed: -
Access level: 3
Data type: Integer32
Data set: -
Function diagram: -
P-Group: -
Units group: -
Unit selection: -

Min	Max	Factory setting
-	-	-

Description: Access to the CANopen object target velocity using the SDO transfer.
The value is displayed in increments/second as standard.
Note: Corresponds to the CANopen object 60FF hex + 800 hex * x (x: drive number 0 ... 7).
The displayed value is calculated as follows:
r8796 = n_set [RPM] / 60 s * p0408 * 2^p0418

r8797 CBC target torque / Target torque

SERVO (CAN)

Can be changed: -
Access level: 3
Data type: Integer16
Data set: -
Function diagram: -
P-Group: -
Units group: -
Unit selection: -

Min	Max	Factory setting
-	-	-

Description: Access to the CANopen object target torque using SDO transfer.
The value is displayed as per mille (1/1000) as standard.
Note: Corresponds to the CANopen object 6071 hex +800 hex * x (x: drive number 0 ... 7).
The displayed value is calculated as follows:
r8797 [per mille] = M_set [Nm] / p0312 [Nm] * 1000

© Siemens AG, 2005. All rights reserved

p8798[0...1] CBC speed conversion factor / n_conv_factor

SERVO (CAN)	**Can be changed:** T		**Access level:** 3
	Data type: Unsigned32	**Data set:** -	**Function diagram:** -
	P-Group: -	**Units group:** -	**Unit selection:** -
	Min	**Max**	**Factory setting**
	1	4294967295	1

Description: The factor converts the required velocity units into the internal velocity units (U/s).
With the factor setting, for CANopen, the velocity units are increments/second.
The parameter corresponds to the CANopen object 6094 hex.
The internal velocity is calculated as follows:
n_set_internal = object 6094.1 / object 6094.2 * 1/(p0408 * 2^p0418) * required velocity

Index: [0] = Counter
[1] = Denominator

p8840 COMM BOARD monitoring time / CB t_monitoring

CU_S (CB, CBE)	**Can be changed:** U, T		**Access level:** 3
	Data type: Floating Point	**Data set:** -	**Function diagram:** -
	P-Group: Communications	**Units group:** TIME_M3	**Unit selection:** -
	Min	**Max**	**Factory setting**
	0 [ms]	65535000 [ms]	20 [ms]

p8841[0...39] COMM BOARD send configuration data / CB S_config_data

CU_S (CB, CBE)	**Can be changed:** U, T		**Access level:** 3
	Data type: Unsigned16	**Data set:** -	**Function diagram:** -
	P-Group: Communications	**Units group:** -	**Unit selection:** -
	Min	**Max**	**Factory setting**
	0	65535	0

p8842 COMM BOARD start configuration / CB config start

CU_S (CB, CBE)	**Can be changed:** U, T		**Access level:** 3
	Data type: Unsigned16	**Data set:** -	**Function diagram:** -
	P-Group: Communications	**Units group:** -	**Unit selection:** -
	Min	**Max**	**Factory setting**
	0	1	0

r8849[0...139] COMM BOARD receive configuration data / CB E_config_data

CU_S (CB, CBE)	**Can be changed:** -		**Access level:** 3
	Data type: Unsigned16	**Data set:** -	**Function diagram:** -
	P-Group: Communications	**Units group:** -	**Unit selection:** -
	Min	**Max**	**Factory setting**
	-	-	-

© Siemens AG, 2005. All rights reserved

r8850[0...15] CO: COMM BOARD PZD receive word / CB PZD recv word

SERVO, VECTOR	**Can be changed:** -		**Access level:** 3
	Data type: Integer16	**Data set:** -	**Function diagram:** 9204, 9206
	P-Group: Communications	**Units group:** -	**Unit selection:** -
	Min	**Max**	**Factory setting**
	-	-	-

Description: Connector output for interconnecting the PZD (setpoints) received from the COMM BOARD in the word format.

Index:
[0] = PZD 1
[1] = PZD 2
[2] = PZD 3
[3] = PZD 4
[4] = PZD 5
[5] = PZD 6
[6] = PZD 7
[7] = PZD 8
[8] = PZD 9
[9] = PZD 10
[10] = PZD 11
[11] = PZD 12
[12] = PZD 13
[13] = PZD 14
[14] = PZD 15
[15] = PZD 16

Dependency: Refer to: r8860, r8890, r8891, r8892, r8893

Note: PZD1 to PZD4 are displayed bit-serially in r8890 to r8893.

p8851[0...15] CI: COMM BOARD PZD send word / CB PZD send word

SERVO, VECTOR	**Can be changed:** U, T		**Access level:** 3
	Data type: Unsigned32	**Data set:** -	**Function diagram:** 9208
	P-Group: Communications	**Units group:** -	**Unit selection:** -
	Min	**Max**	**Factory setting**
	-	-	0

Description: Selects PZD (actual values) to be sent to COMM BOARD in the word format.

Index:
[0] = PZD 1
[1] = PZD 2
[2] = PZD 3
[3] = PZD 4
[4] = PZD 5
[5] = PZD 6
[6] = PZD 7
[7] = PZD 8
[8] = PZD 9
[9] = PZD 10
[10] = PZD 11
[11] = PZD 12
[12] = PZD 13
[13] = PZD 14
[14] = PZD 15
[15] = PZD 16

Dependency: Refer to: p8861

© Siemens AG, 2005. All rights reserved

r8853[0...15] COMM BOARD PZD send diagnostics / CB diag PZD send

SERVO, VECTOR	**Can be changed:** -		**Access level:** 3
	Data type: Unsigned16	**Data set:** -	**Function diagram:** 9208, 9210
	P-Group: Communications	**Units group:** -	**Unit selection:** -
	Min	**Max**	**Factory setting**
	-	-	-

Description: Displays PZD (actual values) sent to COMM BOARD.

Index:
[0] = PZD 1
[1] = PZD 2
[2] = PZD 3
[3] = PZD 4
[4] = PZD 5
[5] = PZD 6
[6] = PZD 7
[7] = PZD 8
[8] = PZD 9
[9] = PZD 10
[10] = PZD 11
[11] = PZD 12
[12] = PZD 13
[13] = PZD 14
[14] = PZD 15
[15] = PZD 16

Bit field:

Bit	Signal name	0 signal	1 signal	FP
00	Bit 0	Off	On	-
01	Bit 1	Off	On	-
02	Bit 2	Off	On	-
03	Bit 3	Off	On	-
04	Bit 4	Off	On	-
05	Bit 5	Off	On	-
06	Bit 6	Off	On	-
07	Bit 7	Off	On	-
08	Bit 8	Off	On	-
09	Bit 9	Off	On	-
10	Bit 10	Off	On	-
11	Bit 11	Off	On	-
12	Bit 12	Off	On	-
13	Bit 13	Off	On	-
14	Bit 14	Off	On	-
15	Bit 15	Off	On	-

Dependency: Refer to: p8851, p8861

© Siemens AG, 2005. All rights reserved

r8854 COMM BOARD state / CB state

CU_S (CB, CBE)	**Can be changed:** -		**Access level:** 3
	Data type: Integer16	**Data set:** -	**Function diagram:** -
	P-Group: Communications	**Units group:** -	**Unit selection:** -
	Min	**Max**	**Factory setting**
	-	-	-

Description: Status display for COMM BOARD.

Values:
0: No initialization
1: Fatal Error
2: Initialization
3: Send configuration
4: Receive configuration
5: Non-cyclic communication
6: Cyclic communications but no setpoints (stop/no clock cycle)
255: Cyclic communication

r8858[0...39] COMM BOARD read diagnostics channel / CB diagn. read

CU_S (CB, CBE)	**Can be changed:** -		**Access level:** 3
	Data type: Unsigned16	**Data set:** -	**Function diagram:** -
	P-Group: Communications	**Units group:** -	**Unit selection:** -
	Min	**Max**	**Factory setting**
	-	-	-

r8859[0...7] COMM BOARD identification Data / CB Ident_data

CU_S (CB, CBE)	**Can be changed:** -		**Access level:** 3
	Data type: Unsigned16	**Data set:** -	**Function diagram:** -
	P-Group: Communications	**Units group:** -	**Unit selection:** -
	Min	**Max**	**Factory setting**
	-	-	-

© Siemens AG, 2005. All rights reserved

r8860[0...14] CO: COMM BOARD PZD receive double word / CB PZD recv DW

SERVO, VECTOR	**Can be changed:** -		**Access level:** 3
	Data type: Integer32	**Data set:** -	**Function diagram:** 9204, 9206
	P-Group: Communications	**Units group:** -	**Unit selection:** -
	Min	**Max**	**Factory setting**
	-	-	-

Description: Connector output for interconnecting the PZD (setpoints) received from the COMM BOARD with double word format.

Index:
[0] = PZD 1 + 2
[1] = PZD 2 + 3
[2] = PZD 3 + 4
[3] = PZD 4 + 5
[4] = PZD 5 + 6
[5] = PZD 6 + 7
[6] = PZD 7 + 8
[7] = PZD 8 + 9
[8] = PZD 9 +10
[9] = PZD 10 + 11
[10] = PZD 11 + 12
[11] = PZD 12 + 13
[12] = PZD 13 + 14
[13] = PZD 14 + 15
[14] = PZD 15 + 16

Dependency: Refer to: r8850

p8861[0...14] CI: COMM BOARD PZD send doubleword / CB PZD send DW

SERVO, VECTOR	**Can be changed:** U, T		**Access level:** 3
	Data type: Unsigned32	**Data set:** -	**Function diagram:** 9208, 9210
	P-Group: Communications	**Units group:** -	**Unit selection:** -
	Min	**Max**	**Factory setting**
	-	-	0

Description: Selects PZD (actual values) to be sent to COMM BOARD in the double word format.

Index:
[0] = PZD 1 + 2
[1] = PZD 2 + 3
[2] = PZD 3 + 4
[3] = PZD 4 + 5
[4] = PZD 5 + 6
[5] = PZD 6 + 7
[6] = PZD 7 + 8
[7] = PZD 8 + 9
[8] = PZD 9 +10
[9] = PZD 10 + 11
[10] = PZD 11 + 12
[11] = PZD 12 + 13
[12] = PZD 13 + 14
[13] = PZD 14 + 15
[14] = PZD 15 + 16

Dependency: Refer to: p8851

© Siemens AG, 2005. All rights reserved

r8890 BO: COMM BOARD PZD1 receive bit-serial / CB PZD1 recv bitw

SERVO, VECTOR

Can be changed: -
Access level: 3
Data type: Unsigned16
Data set: -
Function diagram: 9204, 9206
P-Group: Communications
Units group: -
Unit selection: -

Min	Max	Factory setting
-	-	-

Description: Binector output for bit-serial interconnection of a PZD1 (normally control word 1) word received from the COMM BOARD.

Bit field:

Bit	Signal name	0 signal	1 signal	FP
00	Bit 0	Off	On	-
01	Bit 1	Off	On	-
02	Bit 2	Off	On	-
03	Bit 3	Off	On	-
04	Bit 4	Off	On	-
05	Bit 5	Off	On	-
06	Bit 6	Off	On	-
07	Bit 7	Off	On	-
08	Bit 8	Off	On	-
09	Bit 9	Off	On	-
10	Bit 10	Off	On	-
11	Bit 11	Off	On	-
12	Bit 12	Off	On	-
13	Bit 13	Off	On	-
14	Bit 14	Off	On	-
15	Bit 15	Off	On	-

Dependency: Refer to: r8850

r8891 BO: COMM BOARD PZD2 receive bit-serial / CB PZD2 recv bitw

SERVO, VECTOR

Can be changed: -
Access level: 3
Data type: Unsigned16
Data set: -
Function diagram: 9204, 9206
P-Group: Communications
Units group: -
Unit selection: -

Min	Max	Factory setting
-	-	-

Description: Binector output for bit-serial interconnection of a PZD2 word received from the COMM BOARD.

Bit field:

Bit	Signal name	0 signal	1 signal	FP
00	Bit 0	Off	On	-
01	Bit 1	Off	On	-
02	Bit 2	Off	On	-
03	Bit 3	Off	On	-
04	Bit 4	Off	On	-
05	Bit 5	Off	On	-
06	Bit 6	Off	On	-
07	Bit 7	Off	On	-
08	Bit 8	Off	On	-
09	Bit 9	Off	On	-
10	Bit 10	Off	On	-
11	Bit 11	Off	On	-
12	Bit 12	Off	On	-
13	Bit 13	Off	On	-
14	Bit 14	Off	On	-
15	Bit 15	Off	On	-

Dependency: Refer to: r8850

© Siemens AG, 2005. All rights reserved

r8892 BO: COMM BOARD PZD3 receive bit-serial / CB PZD3 recv bitw

SERVO, VECTOR

Can be changed: -
Access level: 3
Data type: Unsigned16
Data set: -
Function diagram: 9204, 9206
P-Group: Communications
Units group: -
Unit selection: -

Min	Max	Factory setting
-	-	-

Description: Binector output for bit-serial interconnection of a PZD3 word received from the COMM BOARD..

Bit field:

Bit	Signal name	0 signal	1 signal	FP
00	Bit 0	Off	On	-
01	Bit 1	Off	On	-
02	Bit 2	Off	On	-
03	Bit 3	Off	On	-
04	Bit 4	Off	On	-
05	Bit 5	Off	On	-
06	Bit 6	Off	On	-
07	Bit 7	Off	On	-
08	Bit 8	Off	On	-
09	Bit 9	Off	On	-
10	Bit 10	Off	On	-
11	Bit 11	Off	On	-
12	Bit 12	Off	On	-
13	Bit 13	Off	On	-
14	Bit 14	Off	On	-
15	Bit 15	Off	On	-

Dependency: Refer to: r8850

r8893 BO: COMM BOARD PZD4 receive bit-serial / CB PZD4 recv bitw

SERVO, VECTOR

Can be changed: -
Access level: 3
Data type: Unsigned16
Data set: -
Function diagram: 9204, 9206
P-Group: Communications
Units group: -
Unit selection: -

Min	Max	Factory setting
-	-	-

Description: Binector output for bit-serial interconnection of a PZD4 (normally control word 2) word received from the COMM BOARD.

Bit field:

Bit	Signal name	0 signal	1 signal	FP
00	Bit 0	Off	On	-
01	Bit 1	Off	On	-
02	Bit 2	Off	On	-
03	Bit 3	Off	On	-
04	Bit 4	Off	On	-
05	Bit 5	Off	On	-
06	Bit 6	Off	On	-
07	Bit 7	Off	On	-
08	Bit 8	Off	On	-
09	Bit 9	Off	On	-
10	Bit 10	Off	On	-
11	Bit 11	Off	On	-
12	Bit 12	Off	On	-
13	Bit 13	Off	On	-
14	Bit 14	Off	On	-
15	Bit 15	Off	On	-

Dependency: Refer to: r8850

© Siemens AG, 2005. All rights reserved

r9406[0...19] PS file parameter number, parameter not transferred / PS par n. transf

All objects	**Can be changed:** -		**Access level:** 4
	Data type: Unsigned16	**Data set:** -	**Function diagram:** -
	P-Group: -	**Units group:** -	**Unit selection:** -
	Min	**Max**	**Factory setting**
	-	-	-

Description: Displays the parameters that were not able to be transferred when reading the parameter back-up files (PS files) from the CompactFlash card.

r9406[0] = 0

--> All of the parameter values were able to be transferred error-free.

r9406[0...x] > 0

--> Displays the parameter number whose value was not able to be completely transferred or for an indexed parameter, for at least 1 index, was not able to be transferred. The first index that is not transferred is displayed in r9407.

Dependency: Refer to: r9407, r9408

Note: All indices from r9406 to r9408 designate the same parameter.

The parameter number is in r9406[x], the parameter index is in r9407[x], and the associated fault code is in r94088[x].

r9407[0...19] PS file parameter index, parameter not transferred / PS parIdx n.transf

All objects	**Can be changed:** -		**Access level:** 1
	Data type: Unsigned16	**Data set:** -	**Function diagram:** -
	P-Group: -	**Units group:** -	**Unit selection:** -
	Min	**Max**	**Factory setting**
	-	-	-

Description: Displays the first index of the parameter that was not able to be transferred when reading the parameter back-up files (PS files) from the CompactFlash card.

If, from an indexed parameter, at least one index was not able to be transferred, then the parameter number is displayed in r9406[n] and the first index that was not transferred is displayed in r9407[n].

r9406[0] = 0

--> All of the parameter values were able to be transferred error-free.

r9406[n] > 0

--> Displays r9407[n] the first index of the parameter number r9406[n] that was not transferred.

Dependency: Refer to: r9406, r9408

Note: All indices from r9406 to r9408 designate the same parameter.

The parameter number is in r9406[x], the parameter index is in r9407[x], and the associated fault code is in r94088[x].

r9408[0...19] PS file fault code parameter not transferred / PS fault code

All objects	**Can be changed:** -		**Access level:** 1
	Data type: Unsigned16	**Data set:** -	**Function diagram:** -
	P-Group: -	**Units group:** -	**Unit selection:** -
	Min	**Max**	**Factory setting**
	-	-	-

Description: Only for internal Siemens service.

Note: All indices from r9406 to r9408 designate the same parameter.

The parameter number is in r9406[x], the parameter index is in r9407[x], and the associated fault code is in r94088[x].

© Siemens AG, 2005. All rights reserved

r9409 Number of parameters to be saved / No. of par to save

All objects

Can be changed: - **Access level:** 4
Data type: Unsigned16 **Data set:** - **Function diagram:** -
P-Group: - **Units group:** - **Unit selection:** -

Min	Max	Factory setting
-	-	-

Description: Displays the number of modified parameters and those that have still not be saved for this drive object.
Dependency: Refer to: p0971, p0977
Note: The modified parameters that still need to be saved are internally listed in r9410 ... r9419.

r9481 No. of BICO interconnections / BICO No.

A_INF, B_INF, CU_S, SERVO, TB30, TM15, TM15DI/DO, TM17, TM31, TM41, VECTOR

Can be changed: - **Access level:** 3
Data type: Unsigned16 **Data set:** - **Function diagram:** -
P-Group: Commands **Units group:** - **Unit selection:** -

Min	Max	Factory setting
-	-	-

Description: Displays the number of BICO interconnections (signal drains) to other drive objects.
The selected BICO interconnections should be entered into r9482[0...59] and r9483[0...59].
Dependency: Refer to: r9482, r9483

r9482[0...59] BICO interconnections, BI/CI parameters / BICO BI/CI par

A_INF, B_INF, CU_S, SERVO, TB30, TM15, TM15DI/DO, TM17, TM31, TM41, VECTOR

Can be changed: - **Access level:** 3
Data type: Unsigned32 **Data set:** - **Function diagram:** -
P-Group: Commands **Units group:** - **Unit selection:** -

Min	Max	Factory setting
-	-	-

Description: Displays the signal drains (Binector/Connector Inputs, BI/CI parameters) to other drive objects.
The number of BICO interconnections to other drive objects is displayed in r9481.
Dependency: Refer to: r9481, r9483
Note: The list is sorted according to signal sources and is structured as follows:
r9842[0]: Interconnection 1 (signal drain, BICO coded), r9843[0]: Interconnection 1 (signal source, BICO coded)
r9842[1]: Interconnection 2 (signal drain, BICO coded), r9843[1]: Interconnection 2 (signal source, BICO coded)
...

© Siemens AG, 2005. All rights reserved

r9483[0...59] BICO interconnections, BO/CO parameters / BICO BO/CO par

A_INF, B_INF, CU_S, SERVO, TB30, TM15, TM15DI/DO, TM17, TM31, TM41, VECTOR

Can be changed: -
Access level: 3
Data type: Unsigned32
Data set: -
Function diagram: -
P-Group: Commands
Units group: -
Unit selection: -

Min	Max	Factory setting
-	-	-

Description: Displays the signal sources (Binector/Connector Outputs, BO/CO parameters) to other drive objects.
The number of BICO interconnections to other drive objects is displayed in r9481.

Dependency: Refer to: r9481, r9482

Note: The list is sorted according to signal sources and is structured as follows:
r9842[0]: Interconnection 1 (signal drain, BICO coded), r9843[0]: Interconnection 1 (signal source, BICO coded)
r9842[1]: Interconnection 2 (signal drain, BICO coded), r9843[1]: Interconnection 2 (signal source, BICO coded)
...

p9484 BICO interconnections, search signal source / BICO S_src srch

A_INF, B_INF, CU_S, SERVO, TB30, TM15, TM15DI/DO, TM17, TM31, TM41, VECTOR

Can be changed: T
Access level: 3
Data type: Unsigned32
Data set: -
Function diagram: -
P-Group: -
Units group: -
Unit selection: -

Min	Max	Factory setting
0	4294967295	0

Description: Sets the signal source (BO/CO parameter, BICO coded) to search in the signal drains.
The question is answered:
How often is a connection made to a signal source in the drive object and from which index are these interconnections saved (r9482[0...59], r9483[0...59])?

Dependency: Refer to: r9481, r9482, r9483, r9485, r9486

r9485 BICO interconnections, signal source search number / BICO S_src srchNo.

A_INF, B_INF, CU_S, SERVO, TB30, TM15, TM15DI/DO, TM17, TM31, TM41, VECTOR

Can be changed: -
Access level: 3
Data type: Unsigned16
Data set: -
Function diagram: -
P-Group: -
Units group: -
Unit selection: -

Min	Max	Factory setting
-	-	-

Description: Displays the number of BICO interconnections to the signal drain being searched for.
The signal source to be searched is set in p9484 (BICO-coded).
The search result is contained in r9482[0...59] and r9483[0...59] and is specified by the number (r9485) and the first index (r9486).

Dependency: Refer to: r9481, r9482, r9483, p9484, r9486

© Siemens AG, 2005. All rights reserved

r9486 BICO interconnections, signal source search first index / BICO S_src srchIdx

A_INF, B_INF, CU_S, SERVO, TB30, TM15, TM15DI/DO, TM17, TM31, TM41, VECTOR

Can be changed: - **Access level:** 3
Data type: Unsigned16 **Data set:** - **Function diagram:** -
P-Group: - **Units group:** - **Unit selection:** -

Min	Max	Factory setting
-	-	-

Description: Displays the first index of the signal source being searched for.
The signal source to be searched is set in p9484 (BICO-coded).
The search result is contained in r9482[0...59] and r9483[0...59] and is specified by the number (r9485) and the first index (r9486).

Dependency: Refer to: r9481, r9482, r9483, p9484, r9485

r9490 Number of BICO interconnections to other drives / No. BICO to drive

All objects

Can be changed: - **Access level:** 3
Data type: Unsigned16 **Data set:** - **Function diagram:** -
P-Group: Commands **Units group:** - **Unit selection:** -

Min	Max	Factory setting
-	-	-

Description: Displays the number of signal sources from this drive to other drives/drive objects (Binector Output/Connector Output, BO/CO).

Dependency: Refer to: r9491, r9492, p9493

r9491[0...9] BI/CI of BICO interconnections to other drives / BI/CI to drive

All objects

Can be changed: - **Access level:** 3
Data type: Unsigned32 **Data set:** - **Function diagram:** -
P-Group: Commands **Units group:** - **Unit selection:** -

Min	Max	Factory setting
-	-	-

Description: Displays the signal receiver list (Binector Input/Connector Input, BI/CI) for the first interconnections between this drive and other drives/drive objects.

Dependency: Refer to: r9490, r9492, p9493

Notice: A drive cannot be deleted if this list is not empty! Otherwise, another drive would continue to attempt to read a signal from a drive that no longer existed.

Note: All indices of r9491 to p9493 designate the same interconnection.
r9491[x] contains the signal receiver and r9492[x] the matching signal source; p9493[x] can be set to modify the interconnection.

© Siemens AG, 2005. All rights reserved

r9492[0...9] BO/CO of BICO interconnections to other drives / BO/CO to drive

All objects

Can be changed: -		**Access level:** 3
Data type: Unsigned32	**Data set:** -	**Function diagram:** -
P-Group: Commands	**Units group:** -	**Unit selection:** -
Min	**Max**	**Factory setting**
-	-	-

Description: Displays the signal source list (Binector Output/Connector Output, BO/CO) for the first interconnections between this drive and other drives/drive objects.

Dependency: Refer to: r9490, r9491, p9493

Notice: A drive cannot be deleted if this list is not empty! Otherwise, another drive would continue to attempt to read a signal from a drive that no longer existed.

Note: All indices of r9491 to p9493 designate the same interconnection.

r9491[x] contains the signal receiver and r9492[x] the matching signal source; p9493[x] can be set to modify the interconnection.

p9493[0...9] Reset BICO interconnections to other drives / Reset BICO to drv

All objects

Can be changed: T		**Access level:** 3
Data type: Integer16	**Data set:** -	**Function diagram:** -
P-Group: -	**Units group:** -	**Unit selection:** -
Min	**Max**	**Factory setting**
0000 hex	000F hex	000F hex

Description: Setting to reset the BICO interconnections to other drives. Each interconnection can be individually reset.

Values:
0: Set connection to 0
1: Set connection to 1 (100 %)
2: Set connection to factory setting
15: Finished

Dependency: Refer to: r9490, r9491, r9492

Note: All indices of r9491 to p9493 designate the same interconnection.

r9491[x] contains the signal receiver and r9492[x] the matching signal source; p9493[x] can be set to modify the interconnection.

p9495 BICO behavior to de-activated drive objects / Behav to deact obj

A_INF, B_INF, CU_S, SERVO, TB30, TM15, TM15DI/DO, TM17, TM31, TM41, VECTOR

Can be changed: T		**Access level:** 3
Data type: Integer16	**Data set:** -	**Function diagram:** -
P-Group: -	**Units group:** -	**Unit selection:** -
Min	**Max**	**Factory setting**
0	2	0

Description: Setting for the behavior for BICO interconnections to other non-operational/de-activated drive objects.

If this drive object has BICO interconnections to other non-operational or de-activated drive objects as drain, then using these parameters, all of the associated BI/CI parameters of this drive object can be set to the re-set value and marked, or only marked.

Values:
0: Do not do anything
1: Mark connection
2: Set the connection to default and mark

Dependency: Refer to: p9496, p9497, r9498, r9499

Refer to: A01318, F01507

Note: The BI/CI parameters involved are listed in r9498[0...29] (drain).

The associated BO/CO parameters are listed in r9499[0...29] (source).

However, r9498 and r9499 are only then filled if p9495 is not equal to 0, otherwise they remain empty.

© Siemens AG, 2005. All rights reserved

p9496 Restore BICO to the drive objects that are now activated / Rest BICO act obj

A_INF, B_INF, CU_S, SERVO, TB30, TM15, TM15DI/DO, TM17, TM31, TM41, VECTOR

Can be changed: T | **Access level:** 3
Data type: Integer16 | **Data set:** - | **Function diagram:** -
P-Group: - | **Units group:** - | **Unit selection:** -

Min	Max	Factory setting
0	2	0

Description: If this drive object has BICO interconnections to other drive objects that are either not operational or have been de-activated, then using this parameter, all of the BI/CI parameters involved with this drive object can be re-established.

Values:
0: Do not do anything
1: Restore the connections from the list
2: Delete the connection from the list

Dependency: Refer to: p9495, p9497, r9498, r9499
Refer to: A01318, F01507

Note: The BI/CI parameters involved are listed in r9498[0...29] (drain).
The associated BO/CO parameters are listed in r9499[0...29] (source).
After setting p9496 to 1 or 2, r9498 and r9499 are reset, r9497 is set to 0 and p9496 itself is set to 0.

p9497 BICO number of interconnections to de-activated drive objects / No. to deact obj

A_INF, B_INF, CU_S, SERVO, TB30, TM15, TM15DI/DO, TM17, TM31, TM41, VECTOR

Can be changed: T | **Access level:** 3
Data type: Unsigned16 | **Data set:** - | **Function diagram:** -
P-Group: Commands | **Units group:** - | **Unit selection:** -

Min	Max	Factory setting
0	65535	0

Description: Displays the number of signal drains of this drive object to other drives/drive objects that are no longer operational/de-activated (Binector Input/Connector Input, BI/CI).

Dependency: Refer to: p9495, p9496, r9498, r9499
Refer to: A01318, F01507

Note: The parameter is only used for display purposes and cannot be written into.

r9498[0...29] BICO BI/CI parameters to de-activated drive objects / BI/CI to deact obj

A_INF, B_INF, CU_S, SERVO, TB30, TM15, TM15DI/DO, TM17, TM31, TM41, VECTOR

Can be changed: - | **Access level:** 3
Data type: Unsigned32 | **Data set:** - | **Function diagram:** -
P-Group: Commands | **Units group:** - | **Unit selection:** -

Min	Max	Factory setting
-	-	-

Description: List of the BI/CI parameters that represent a connection to non-operational/de-activated drive objects.

Dependency: Refer to: p9495, p9496, p9497, r9499
Refer to: A01318, F01507

Note: All indices from r9498 to r9499 designate the same BICO interconnection.
This signal drain is in r9498[x] and the associated signal source in r9499[x].

© Siemens AG, 2005. All rights reserved

r9499[0...29] BICO BO/CO parameters to de-activated drive objects / BO/CO to deact obj

A_INF, B_INF, CU_S, SERVO, TB30, TM15, TM15DI/DO, TM17, TM31, TM41, VECTOR

Can be changed: -
Access level: 3
Data type: Unsigned32
Data set: -
Function diagram: -
P-Group: Commands
Units group: -
Unit selection: -

Min	Max	Factory setting
-	-	-

Description: List of the BO/CO parameters that represent a connection to non-operational/de-activated drive objects.
Dependency: Refer to: p9495, p9496, p9497, r9498
Refer to: A01318, F01507
Note: All indices from r9498 to r9499 designate the same BICO interconnection.
This signal drain is in r9498[x] and the associated signal source in r9499[x].

p9500 SI motion monitoring clock cycle / SI Mtn clock

SERVO

Can be changed: U, T
Access level: 4
Data type: Floating Point
Data set: -
Function diagram: -
P-Group: Safety Integrated
Units group: TIME_M3
Unit selection: -

Min	Max	Factory setting
0.50 [ms]	25.00 [ms]	12.00 [ms]

Description: Sets the monitoring clock cycle for safe motion monitoring.
Dependency: Refer to: p0115
Refer to: F01652
Note: The monitoring clock cycle must be a multiple of the position controller clock cycle.

p9501 SI motion enable safety-relevant functions / SI Mtn enable

SERVO

Can be changed: U, T
Access level: 4
Data type: Unsigned32
Data set: -
Function diagram: -
P-Group: Safety Integrated
Units group: -
Unit selection: -

Min	Max	Factory setting
0000 bin	1111 1111 1111 1111 1111 1111 1111 1111 bin	0000 bin

Description: Sets the enable signals for the safe motion monitoring.

Bit field:

Bit	Signal name	0 signal	1 signal	FP
00	Enable SBH/SG	Inhibit	Enable	-
01	Enable SE	Inhibit	Enable	-
03	Enable actual value synchronization	Inhibit	Enable	-
04	Enable external ESR activation	Inhibit	Enable	-
05	Enable override SG	Inhibit	Enable	-
06	Enable external STOPs	Inhibit	Enable	-
07	Enable cam synchronization	Inhibit	Enable	-
08	Enable SN1+	Inhibit	Enable	-
09	Enable SN1 -	Inhibit	Enable	-
10	Enable SN2 +	Inhibit	Enable	-
11	Enable SN2 -	Inhibit	Enable	-
12	Enable SN3 +	Inhibit	Enable	-
13	Enable SN3 -	Inhibit	Enable	-
14	Enable SN4 +	Inhibit	Enable	-
15	Enable SN4 -	Inhibit	Enable	-

Dependency: Refer to: F01682, F01683

© Siemens AG, 2005. All rights reserved

Note: A change only becomes effective after a POWER ON.
ESR: Extended stopping and retraction
SBH: Safe operating stop
SE: Safe software limit switch
SG: Safely-reduced speed
SN: Safe software cams

p9502 SI motion axis type / SI Mtn axis type

SERVO

Can be changed: U, T		**Access level:** 4
Data type: Integer16	**Data set:** -	**Function diagram:** -
P-Group: Safety Integrated	**Units group:** -	**Unit selection:** -
Min	**Max**	**Factory setting**
0	1	0

Description: Sets the axis type (linear axis or rotary axis/spindle).

Values:
0: Linear axis
1: Rot axis/spindle

Note: A change only becomes effective after a POWER ON.

p9516 SI motion motor encoder configuration, safety-relevant functions / SI Mtn enc config

SERVO

Can be changed: U, T		**Access level:** 4
Data type: Unsigned16	**Data set:** -	**Function diagram:** -
P-Group: Safety Integrated	**Units group:** -	**Unit selection:** -
Min	**Max**	**Factory setting**
0000 bin	0011 bin	0000 bin

Description: Sets the configuration for the motor encoder and position actual value.

Bit field:

Bit	Signal name	0 signal	1 signal	FP
00	Motor encoder, rotating/linear	Rotating:	Linear	-
01	Position actual value, sign change	No	Yes	-

Note: A change only becomes effective after a POWER ON.

p9517 SI motion linear scale, grid division / SI Mtn grid

SERVO

Can be changed: U, T		**Access level:** 4
Data type: Floating Point	**Data set:** -	**Function diagram:** -
P-Group: Safety Integrated	**Units group:** LENGTH_M9	**Unit selection:** -
Min	**Max**	**Factory setting**
0.00 [nm]	250000000.00 [nm]	10000.00 [nm]

Description: Sets the grid division for a linear motor encoder.

Dependency: Refer to: p9516

Note: A change only becomes effective after a POWER ON.

p9518 SI motion encoder pulses per revolution / SI Mtn pulses/rev

SERVO

Can be changed: U, T		**Access level:** 4
Data type: Unsigned32	**Data set:** -	**Function diagram:** -
P-Group: Safety Integrated	**Units group:** -	**Unit selection:** -
Min	**Max**	**Factory setting**
0	100000	2048

Description: Sets the number of encoder pulses per revolution for rotary motor encoders.

Dependency: Refer to: p9516

Note: A change only becomes effective after a POWER ON.

© Siemens AG, 2005. All rights reserved

p9519 SI motion fine resolution G1_XIST1 / SI Mtn fine resolu

SERVO	**Can be changed:** U, T		**Access level:** 4
	Data type: Unsigned32	**Data set:** -	**Function diagram:** -
	P-Group: Safety Integrated	**Units group:** -	**Unit selection:** -
	Min	**Max**	**Factory setting**
	2	18	11

Description: Sets the fine resolution for G1_XIST1 in bits.
For safe functions that are not enabled (p9501 = 0), the following applies:
p9519 is automatically set the same as p0418 at run-up.
For safety functions that are enabled (p9501 > 0), the following applies:
p9519 is checked to see that it matches p0418.

Dependency: Refer to: p0418
Refer to: F01670, F01671

Note: A change only becomes effective after a POWER ON.
G1_XIST1: Position actual value of the motor encoder according to PROFIdrive

p9520 SI motion spindle pitch / SI Mtn Sp_pitch

SERVO	**Can be changed:** U, T		**Access level:** 4
	Data type: Floating Point	**Data set:** -	**Function diagram:** -
	P-Group: Safety Integrated	**Units group:** LENGTH_M3	**Unit selection:** -
	Min	**Max**	**Factory setting**
	0.10 [mm]	8388.00 [mm]	10.00 [mm]

Description: Sets the gear ratio between the encoder and load in mm/rev for a linear axis with rotary encoder.

Note: A change only becomes effective after a POWER ON.

p9521[0...7] SI motion gearbox encoder/load denominator / SI Mtn gear denom

SERVO	**Can be changed:** U, T		**Access level:** 4
	Data type: Unsigned32	**Data set:** -	**Function diagram:** -
	P-Group: Safety Integrated	**Units group:** -	**Unit selection:** -
	Min	**Max**	**Factory setting**
	1	2147000000	1

Description: Sets the denominator for the gearbox between the encoder and load.
The actual gearbox stage is selected via safety-relevant inputs (SGE).

Index: [0] = Gearbox 1
[1] = Gearbox 2
[2] = Gearbox 3
[3] = Gearbox 4
[4] = Gearbox 5
[5] = Gearbox 6
[6] = Gearbox 7
[7] = Gearbox 8

Dependency: Refer to: p9522

Note: A change only becomes effective after a POWER ON.

© Siemens AG, 2005. All rights reserved

p9522[0...7] SI motion gearbox encoder/load numerator / SI Mtn gear numer

SERVO	**Can be changed:** U, T		**Access level:** 4
	Data type: Unsigned32	**Data set:** -	**Function diagram:** -
	P-Group: Safety Integrated	**Units group:** -	**Unit selection:** -
	Min	**Max**	**Factory setting**
	1	2147000000	1

Description: Sets the numerator for the gearbox between the encoder and load.
The actual gearbox stage is selected via safety-relevant inputs (SGE).

Index: [0] = Gearbox 1
[1] = Gearbox 2
[2] = Gearbox 3
[3] = Gearbox 4
[4] = Gearbox 5
[5] = Gearbox 6
[6] = Gearbox 7
[7] = Gearbox 8

Dependency: Refer to: p9521

Note: A change only becomes effective after a POWER ON.

p9526 SI motion encoder assignment, control / SI Mtn encod NC

SERVO	**Can be changed:** U, T		**Access level:** 4
	Data type: Unsigned32	**Data set:** -	**Function diagram:** -
	P-Group: Safety Integrated	**Units group:** -	**Unit selection:** -
	Min	**Max**	**Factory setting**
	1	3	1

Description: Sets the number of the encoder that the control uses for the safe motion monitoring functions.

Dependency: For the safe motion monitoring functions, the redundant safety position actual value sensing must be activated in the appropriate encoder data set (p0430.19 = 1).
Refer to: p0187, p0188, p0189, p0430

Note: If a 1 is parameterized (the control uses an encoder for closed-loop speed control), then a single-encoder system is being used.
A change only becomes effective after a POWER ON.

p9530 SI motion standstill tolerance / SI Mtn standst_tol

SERVO	**Can be changed:** U, T		**Access level:** 4
	Data type: Floating Point	**Data set:** -	**Function diagram:** -
	P-Group: Safety Integrated	**Units group:** LENGTH_M3	**Unit selection:** -
	Min	**Max**	**Factory setting**
	0.00 [mm]	100.00 [mm]	1.00 [mm]

Description: Sets the tolerance in mm or degrees for the function "safe operating stop" (SBH).

Dependency: Refer to: C01707

Note: A change only becomes effective after a POWER ON.

© Siemens AG, 2005. All rights reserved

p9530 SI motion standstill tolerance / SI Mtn standst_tol

SERVO (Safety rot)	**Can be changed:** U, T		**Access level:** 4
	Data type: Floating Point	**Data set:** -	**Function diagram:** -
	P-Group: Safety Integrated	**Units group:** ANGLE	**Unit selection:** -
	Min	**Max**	**Factory setting**
	0.00 [°]	100.00 [°]	1.00 [°]

Description: Sets the tolerance in mm or degrees for the function "safe operating stop" (SBH).
Dependency: Refer to: C01707
Note: A change only becomes effective after a POWER ON.

p9531[0...3] SI motion SG limit values / SI Mtn SG lim val

SERVO	**Can be changed:** U, T		**Access level:** 4
	Data type: Floating Point	**Data set:** -	**Function diagram:** -
	P-Group: Safety Integrated	**Units group:** SPEED_LIN_METRIC	**Unit selection:** -
	Min	**Max**	**Factory setting**
	0.00 [mm/min]	1000000.00 [mm/min]	2000.00 [mm/min]

Description: Sets the limit values in mm/min or RPM for the function "safely-reduced speed" (SG).
Index: [0] = Limit value SG1
[1] = Limit value SG2
[2] = Limit value SG3
[3] = Limit value SG4
Dependency: Refer to: p9532, p9561, p9563
Refer to: C01714
Note: A change only becomes effective after a POWER ON.

p9531[0...3] SI motion SG limit values / SI Mtn SG lim val

SERVO (Safety rot)	**Can be changed:** U, T		**Access level:** 4
	Data type: Floating Point	**Data set:** -	**Function diagram:** -
	P-Group: Safety Integrated	**Units group:** SPEED_ROT	**Unit selection:** -
	Min	**Max**	**Factory setting**
	0.00 [1/min]	1000000.00 [1/min]	2000.00 [1/min]

Description: Sets the limit values in mm/min or RPM for the function "safely-reduced speed" (SG).
Index: [0] = Limit value SG1
[1] = Limit value SG2
[2] = Limit value SG3
[3] = Limit value SG4
Dependency: Refer to: p9532, p9561, p9563
Refer to: C01714
Note: A change only becomes effective after a POWER ON.

© Siemens AG, 2005. All rights reserved

p9532[0...15] SI motion SG override factor / SI Mtn SG override

SERVO	**Can be changed:** U, T		**Access level:** 4
	Data type: Floating Point	**Data set:** -	**Function diagram:** -
	P-Group: Safety Integrated	**Units group:** PERCENT	**Unit selection:** -
	Min	**Max**	**Factory setting**
	0.000 [%]	100.000 [%]	100.000 [%]

Description: Sets the override factor for the limit value for SG2 and SG4 for the function "safely reduced speed" (SG).

Index:
[0] = SG override factor 0
[1] = SG override factor 1
[2] = SG override factor 2
[3] = SG override factor 3
[4] = SG override factor 4
[5] = SG override factor 5
[6] = SG override factor 6
[7] = SG override factor 7
[8] = SG override factor 8
[9] = SG override factor 9
[10] = SG override factor 10
[11] = SG override factor 11
[12] = SG override factor 12
[13] = SG override factor 13
[14] = SG override factor 14
[15] = SG override factor 15

Dependency: Refer to: p9501, p9531

Note: The actual override factor for SG2 and SG4 is selected using the safety-relevant inputs (SGE).
A change only becomes effective after a POWER ON.

p9534[0...1] SI motion SE upper limit values / SI Mtn SE up_lim

SERVO	**Can be changed:** U, T		**Access level:** 4
	Data type: Floating Point	**Data set:** -	**Function diagram:** -
	P-Group: Safety Integrated	**Units group:** LENGTH_M3	**Unit selection:** -
	Min	**Max**	**Factory setting**
	-2147000.00 [mm]	2147000.00 [mm]	100000.00 [mm]

Description: Sets the upper limit value in mm or degrees for the function "safe software limit switch" (SE).

Index:
[0] = Limit value SE1
[1] = Limit value SE 2

Dependency: Refer to: p9501, p9535, p9562

Note: For the setting of the SE limit values, the following applies: p9534 > p9535
A change only becomes effective after a POWER ON.

p9534[0...1] SI motion SE upper limit values / SI Mtn SE up_lim

SERVO (Safety rot)	**Can be changed:** U, T		**Access level:** 4
	Data type: Floating Point	**Data set:** -	**Function diagram:** -
	P-Group: Safety Integrated	**Units group:** ANGLE	**Unit selection:** -
	Min	**Max**	**Factory setting**
	-2147000.00 [°]	2147000.00 [°]	100000.00 [°]

Description: Sets the upper limit value in mm or degrees for the function "safe software limit switch" (SE).

Index:
[0] = Limit value SE1
[1] = Limit value SE 2

Dependency: Refer to: p9501, p9535, p9562

Note: For the setting of the SE limit values, the following applies: p9534 > p9535
A change only becomes effective after a POWER ON.

© Siemens AG, 2005. All rights reserved

p9535[0...1] SI motion SE lower limit values / SI Mtn SE low_lim

SERVO	**Can be changed:** U, T		**Access level:** 4
	Data type: Floating Point	**Data set:** -	**Function diagram:** -
	P-Group: Safety Integrated	**Units group:** LENGTH_M3	**Unit selection:** -
	Min	**Max**	**Factory setting**
	-2147000.00 [mm]	2147000.00 [mm]	-100000.00 [mm]

Description: Sets the lower limit value in mm or degrees for the function "safe software limit switch" (SE).

Index: [0] = Limit value SE1
[1] = Limit value SE 2

Dependency: Refer to: p9501, p9534, p9562

Note: For the setting of the SE limit values, the following applies: p9534 > p9535
A change only becomes effective after a POWER ON.

p9535[0...1] SI motion SE lower limit values / SI Mtn SE low_lim

SERVO (Safety rot)	**Can be changed:** U, T		**Access level:** 4
	Data type: Floating Point	**Data set:** -	**Function diagram:** -
	P-Group: Safety Integrated	**Units group:** ANGLE	**Unit selection:** -
	Min	**Max**	**Factory setting**
	-2147000.00 [°]	2147000.00 [°]	-100000.00 [°]

Description: Sets the lower limit value in mm or degrees for the function "safe software limit switch" (SE).

Index: [0] = Limit value SE1
[1] = Limit value SE 2

Dependency: Refer to: p9501, p9534, p9562

Note: For the setting of the SE limit values, the following applies: p9534 > p9535
A change only becomes effective after a POWER ON.

© Siemens AG, 2005. All rights reserved

p9536[0...29] SI motion SN plus cam position / SI Mtn SN+

SERVO	**Can be changed:** U, T		**Access level:** 4
	Data type: Floating Point	**Data set:** -	**Function diagram:** -
	P-Group: Safety Integrated	**Units group:** LENGTH_M3	**Unit selection:** -
	Min	**Max**	**Factory setting**
	-2147000.00 [mm]	2147000.00 [mm]	10.00 [mm]

Description: Sets the plus cam position in mm or degrees for the function "safe software cams" (SN).

Index:
[0] = Cam position SN1
[1] = Cam position SN2
[2] = Cam position SN3
[3] = Cam position SN4
[4] = Cam position SN5
[5] = Cam position SN6
[6] = Cam position SN7
[7] = Cam position SN8
[8] = Cam position SN9
[9] = Cam position SN10
[10] = Cam position SN11
[11] = Cam position SN12
[12] = Cam position SN13
[13] = Cam position SN14
[14] = Cam position SN15
[15] = Cam position SN16
[16] = Cam position SN17
[17] = Cam position SN18
[18] = Cam position SN19
[19] = Cam position SN20
[20] = Cam position SN21
[21] = Cam position SN22
[22] = Cam position SN23
[23] = Cam position SN24
[24] = Cam position SN25
[25] = Cam position SN26
[26] = Cam position SN27
[27] = Cam position SN28
[28] = Cam position SN29
[29] = Cam position SN30

Dependency: Refer to: p9501, p9537

Note: A change only becomes effective after a POWER ON.

© Siemens AG, 2005. All rights reserved

p9536[0...29] SI motion SN plus cam position / SI Mtn SN+

SERVO (Safety rot)	**Can be changed:** U, T		**Access level:** 4
	Data type: Floating Point	**Data set:** -	**Function diagram:** -
	P-Group: Safety Integrated	**Units group:** ANGLE	**Unit selection:** -
	Min	**Max**	**Factory setting**
	-2147000.00 [°]	2147000.00 [°]	10.00 [°]

Description: Sets the plus cam position in mm or degrees for the function "safe software cams" (SN).

Index:
[0] = Cam position SN1
[1] = Cam position SN2
[2] = Cam position SN3
[3] = Cam position SN4
[4] = Cam position SN5
[5] = Cam position SN6
[6] = Cam position SN7
[7] = Cam position SN8
[8] = Cam position SN9
[9] = Cam position SN10
[10] = Cam position SN11
[11] = Cam position SN12
[12] = Cam position SN13
[13] = Cam position SN14
[14] = Cam position SN15
[15] = Cam position SN16
[16] = Cam position SN17
[17] = Cam position SN18
[18] = Cam position SN19
[19] = Cam position SN20
[20] = Cam position SN21
[21] = Cam position SN22
[22] = Cam position SN23
[23] = Cam position SN24
[24] = Cam position SN25
[25] = Cam position SN26
[26] = Cam position SN27
[27] = Cam position SN28
[28] = Cam position SN29
[29] = Cam position SN30

Dependency: Refer to: p9501, p9537

Note: A change only becomes effective after a POWER ON.

© Siemens AG, 2005. All rights reserved

p9537[0...29] SI motion SN minus cam position / SI Mtn SN-

SERVO	**Can be changed:** U, T		**Access level:** 4
	Data type: Floating Point	**Data set:** -	**Function diagram:** -
	P-Group: Safety Integrated	**Units group:** LENGTH_M3	**Unit selection:** -
	Min	**Max**	**Factory setting**
	-2147000.00 [mm]	2147000.00 [mm]	-10.00 [mm]

Description: Sets the minus cam position in mm or degrees for the function "safe software cams (SN).

Index:
[0] = Cam position SN1
[1] = Cam position SN2
[2] = Cam position SN3
[3] = Cam position SN4
[4] = Cam position SN5
[5] = Cam position SN6
[6] = Cam position SN7
[7] = Cam position SN8
[8] = Cam position SN9
[9] = Cam position SN10
[10] = Cam position SN11
[11] = Cam position SN12
[12] = Cam position SN13
[13] = Cam position SN14
[14] = Cam position SN15
[15] = Cam position SN16
[16] = Cam position SN17
[17] = Cam position SN18
[18] = Cam position SN19
[19] = Cam position SN20
[20] = Cam position SN21
[21] = Cam position SN22
[22] = Cam position SN23
[23] = Cam position SN24
[24] = Cam position SN25
[25] = Cam position SN26
[26] = Cam position SN27
[27] = Cam position SN28
[28] = Cam position SN29
[29] = Cam position SN30

Dependency: Refer to: p9501, p9536

Note: A change only becomes effective after a POWER ON.

© Siemens AG, 2005. All rights reserved

p9537[0...29] SI motion SN minus cam position / SI Mtn SN-

SERVO (Safety rot)	**Can be changed:** U, T		**Access level:** 4
	Data type: Floating Point	**Data set:** -	**Function diagram:** -
	P-Group: Safety Integrated	**Units group:** ANGLE	**Unit selection:** -
	Min	**Max**	**Factory setting**
	-2147000.00 [°]	2147000.00 [°]	-10.00 [°]

Description: Sets the minus cam position in mm or degrees for the function "safe software cams (SN).

Index:
[0] = Cam position SN1
[1] = Cam position SN2
[2] = Cam position SN3
[3] = Cam position SN4
[4] = Cam position SN5
[5] = Cam position SN6
[6] = Cam position SN7
[7] = Cam position SN8
[8] = Cam position SN9
[9] = Cam position SN10
[10] = Cam position SN11
[11] = Cam position SN12
[12] = Cam position SN13
[13] = Cam position SN14
[14] = Cam position SN15
[15] = Cam position SN16
[16] = Cam position SN17
[17] = Cam position SN18
[18] = Cam position SN19
[19] = Cam position SN20
[20] = Cam position SN21
[21] = Cam position SN22
[22] = Cam position SN23
[23] = Cam position SN24
[24] = Cam position SN25
[25] = Cam position SN26
[26] = Cam position SN27
[27] = Cam position SN28
[28] = Cam position SN29
[29] = Cam position SN30

Dependency: Refer to: p9501, p9536

Note: A change only becomes effective after a POWER ON.

p9540 SI motion SN tolerance / SI Mtn SN tol

SERVO	**Can be changed:** U, T		**Access level:** 4
	Data type: Floating Point	**Data set:** -	**Function diagram:** -
	P-Group: Safety Integrated	**Units group:** LENGTH_M3	**Unit selection:** -
	Min	**Max**	**Factory setting**
	0.0010 [mm]	10.0000 [mm]	0.1000 [mm]

Description: Sets the tolerance in mm or degrees for the function "safe software cams" (SN).
Within this tolerance, both monitoring channels may signal different signal states of the same safe software cam.

Note: A change only becomes effective after a POWER ON.

© Siemens AG, 2005. All rights reserved

p9540 SI motion SN tolerance / SI Mtn SN tol

SERVO (Safety rot)	**Can be changed:** U, T		**Access level:** 4
	Data type: Floating Point	**Data set:** -	**Function diagram:** -
	P-Group: Safety Integrated	**Units group:** ANGLE	**Unit selection:** -
	Min	**Max**	**Factory setting**
	0.0010 [°]	10.0000 [°]	0.1000 [°]

Description: Sets the tolerance in mm or degrees for the function "safe software cams" (SN).
Within this tolerance, both monitoring channels may signal different signal states of the same safe software cam.

Note: A change only becomes effective after a POWER ON.

p9542 SI motion actual value comparison tolerance (crosswise) / SI Mtn act val tol

SERVO	**Can be changed:** U, T		**Access level:** 4
	Data type: Floating Point	**Data set:** -	**Function diagram:** -
	P-Group: Safety Integrated	**Units group:** LENGTH_M3	**Unit selection:** -
	Min	**Max**	**Factory setting**
	0.0010 [mm]	360.0000 [mm]	0.1000 [mm]

Description: Sets the tolerance in mm or degrees for the crosswise data comparison of the actual position between the two monitoring channels.

Dependency: Refer to: C01711

Note: A change only becomes effective after a POWER ON.

p9542 SI motion actual value comparison tolerance (crosswise) / SI Mtn act val tol

SERVO (Safety rot)	**Can be changed:** U, T		**Access level:** 4
	Data type: Floating Point	**Data set:** -	**Function diagram:** -
	P-Group: Safety Integrated	**Units group:** ANGLE	**Unit selection:** -
	Min	**Max**	**Factory setting**
	0.0010 [°]	360.0000 [°]	0.1000 [°]

Description: Sets the tolerance in mm or degrees for the crosswise data comparison of the actual position between the two monitoring channels.

Dependency: Refer to: C01711

Note: A change only becomes effective after a POWER ON.

p9544 SI motion actual value comparison tolerance (referencing) / SI Mtn ref tol

SERVO	**Can be changed:** U, T		**Access level:** 4
	Data type: Floating Point	**Data set:** -	**Function diagram:** -
	P-Group: Safety Integrated	**Units group:** LENGTH_M3	**Unit selection:** -
	Min	**Max**	**Factory setting**
	0.0000 [mm]	36.0000 [mm]	0.0100 [mm]

Description: Sets the tolerance in mm or degrees to check the actual values after referencing (incremental encoder) or when powering-up (absolute value encoder).

Dependency: Refer to: C01711

Note: A change only becomes effective after a POWER ON.

© Siemens AG, 2005. All rights reserved

p9544 SI motion actual value comparison tolerance (referencing) / SI Mtn ref tol

SERVO (Safety rot)	**Can be changed:** U, T		**Access level:** 4
	Data type: Floating Point	**Data set:** -	**Function diagram:** -
	P-Group: Safety Integrated	**Units group:** ANGLE	**Unit selection:** -
	Min	**Max**	**Factory setting**
	0.0000 [°]	36.0000 [°]	0.0100 [°]

Description: Sets the tolerance in mm or degrees to check the actual values after referencing (incremental encoder) or when powering-up (absolute value encoder).
Dependency: Refer to: C01711
Note: A change only becomes effective after a POWER ON.

p9546 SI motion velocity limit n_x / SI Mtn lim val n_x

SERVO	**Can be changed:** U, T		**Access level:** 4
	Data type: Floating Point	**Data set:** -	**Function diagram:** -
	P-Group: Safety Integrated	**Units group:** SPEED_LIN_METRIC	**Unit selection:** -
	Min	**Max**	**Factory setting**
	0.00 [mm/min]	6000.00 [mm/min]	20.00 [mm/min]

Description: Sets the velocity limit n_x in mm/min or RPM to detect that the drive is at standstill.
When this limit value is fallen below, SGA "n < n_x" is set.
Note: A change only becomes effective after a POWER ON.
SGA: Safety-related output

p9546 SI motion velocity limit n_x / SI Mtn lim val n_x

SERVO (Safety rot)	**Can be changed:** U, T		**Access level:** 4
	Data type: Floating Point	**Data set:** -	**Function diagram:** -
	P-Group: Safety Integrated	**Units group:** SPEED_ROT	**Unit selection:** -
	Min	**Max**	**Factory setting**
	0.00 [1/min]	6000.00 [1/min]	20.00 [1/min]

Description: Sets the velocity limit n_x in mm/min or RPM to detect that the drive is at standstill.
When this limit value is fallen below, SGA "n < n_x" is set.
Note: A change only becomes effective after a POWER ON.
SGA: Safety-related output

p9548 SI motion SBR actual speed tolerance / SI Mtn SBR tol

SERVO	**Can be changed:** U, T		**Access level:** 4
	Data type: Floating Point	**Data set:** -	**Function diagram:** -
	P-Group: Safety Integrated	**Units group:** SPEED_LIN_METRIC	**Unit selection:** -
	Min	**Max**	**Factory setting**
	0.00 [mm/min]	120000.00 [mm/min]	300.00 [mm/min]

Description: Sets the velocity tolerance in mm/min or RPM for the "safe braking ramp" (SBR).
Dependency: Refer to: C01706
Note: A change only becomes effective after a POWER ON.
SBR: Safe braking ramp

© Siemens AG, 2005. All rights reserved

p9548 SI motion SBR actual speed tolerance / SI Mtn SBR tol

SERVO (Safety rot)

Can be changed: U, T		**Access level:** 4
Data type: Floating Point	**Data set:** -	**Function diagram:** -
P-Group: Safety Integrated	**Units group:** SPEED_ROT	**Unit selection:** -
Min	**Max**	**Factory setting**
0.00 [1/min]	120000.00 [1/min]	300.00 [1/min]

Description: Sets the velocity tolerance in mm/min or RPM for the "safe braking ramp" (SBR).

Dependency: Refer to: C01706

Note: A change only becomes effective after a POWER ON.

SBR: Safe braking ramp

p9549 SI motion slip speed tolerance / SI Mtn slip tol

SERVO

Can be changed: U, T		**Access level:** 4
Data type: Floating Point	**Data set:** -	**Function diagram:** -
P-Group: Safety Integrated	**Units group:** SPEED_LIN_METRIC	**Unit selection:** -
Min	**Max**	**Factory setting**
0.00 [mm/min]	6000.00 [mm/min]	6.00 [mm/min]

Description: Sets the velocity tolerance in mm/min or RPM that is used for a two encoder system in crosswise comparison between the drive and the control.

Dependency: Refer to: p9501, p9542

Note: If the "actual value synchronization" is not enabled (p9501.3 = 0), then the value parameterized in p9542 is used as tolerance in the crosswise data comparison.

A change only becomes effective after a POWER ON.

p9549 SI motion slip speed tolerance / SI Mtn slip tol

SERVO (Safety rot)

Can be changed: U, T		**Access level:** 4
Data type: Floating Point	**Data set:** -	**Function diagram:** -
P-Group: Safety Integrated	**Units group:** SPEED_ROT	**Unit selection:** -
Min	**Max**	**Factory setting**
0.00 [1/min]	6000.00 [1/min]	6.00 [1/min]

Description: Sets the velocity tolerance in mm/min or RPM that is used for a two encoder system in crosswise comparison between the drive and the control.

Dependency: Refer to: p9501, p9542

Note: If the "actual value synchronization" is not enabled (p9501.3 = 0), then the value parameterized in p9542 is used as tolerance in the crosswise data comparison.

A change only becomes effective after a POWER ON.

p9550 SI motion SGE changeover tolerance time / SI Mtn SGE tol

SERVO

Can be changed: U, T		**Access level:** 4
Data type: Floating Point	**Data set:** -	**Function diagram:** -
P-Group: Safety Integrated	**Units group:** TIME_M3	**Unit selection:** -
Min	**Max**	**Factory setting**
0.00 [ms]	10000.00 [ms]	500.00 [ms]

Description: Sets the tolerance time for the changeover of the safety-related inputs (SGE).

Note: A change only becomes effective after a POWER ON.

© Siemens AG, 2005. All rights reserved

p9551 SI motion SG changeover delay time / SI Mtn SG t_del

SERVO	**Can be changed:** U, T		**Access level:** 4
	Data type: Floating Point	**Data set:** -	**Function diagram:** -
	P-Group: Safety Integrated	**Units group:** TIME_M3	**Unit selection:** -
	Min	**Max**	**Factory setting**
	0.00 [ms]	60000.00 [ms]	100.00 [ms]

Description: Sets the delay time for the SG changeover for the function "safely reduced speed" (SG).
When transitioning from a higher to a lower safely-reduced velocity/speed stage or to the safe operating stop, within this delay time, the "old" velocity stage remains active.

Note: A change only becomes effective after a POWER ON.

p9552 SI motion transition time STOP C to SBH / SI Mtn time C->SBH

SERVO	**Can be changed:** U, T		**Access level:** 4
	Data type: Floating Point	**Data set:** -	**Function diagram:** -
	P-Group: Safety Integrated	**Units group:** TIME_M3	**Unit selection:** -
	Min	**Max**	**Factory setting**
	0.00 [ms]	10000.00 [ms]	100.00 [ms]

Description: Sets the transition time from STOP C to "safe operating stop" (SBH).

Note: A change only becomes effective after a POWER ON.

p9553 SI motion transition time STOP D to SBH / SI Mtn time D->SBH

SERVO	**Can be changed:** U, T		**Access level:** 4
	Data type: Floating Point	**Data set:** -	**Function diagram:** -
	P-Group: Safety Integrated	**Units group:** TIME_M3	**Unit selection:** -
	Min	**Max**	**Factory setting**
	0.00 [ms]	60000.00 [ms]	100.00 [ms]

Description: Sets the transition time from STOP D to "safe operating stop" (SBH).

Note: A change only becomes effective after a POWER ON.

p9554 SI motion transition time STOP E to SBH / SI Mtn time E->SBH

SERVO	**Can be changed:** U, T		**Access level:** 4
	Data type: Floating Point	**Data set:** -	**Function diagram:** -
	P-Group: Safety Integrated	**Units group:** TIME_M3	**Unit selection:** -
	Min	**Max**	**Factory setting**
	0.00 [ms]	60000.00 [ms]	100.00 [ms]

Description: Sets the transition time from STOP E to "safe operating stop" (SBH).

Note: A change only becomes effective after a POWER ON.

p9555 SI motion transition time STOP F to STOP B / SI Mtn time F->B

SERVO	**Can be changed:** U, T		**Access level:** 4
	Data type: Floating Point	**Data set:** -	**Function diagram:** -
	P-Group: Safety Integrated	**Units group:** TIME_M3	**Unit selection:** -
	Min	**Max**	**Factory setting**
	0.00 [ms]	60000.00 [ms]	0.00 [ms]

Description: Sets the transition time from STOP F to STOP B.

Dependency: Refer to: C01711

Note: A change only becomes effective after a POWER ON.

© Siemens AG, 2005. All rights reserved

p9556 SI motion pulse cancellation delay time / SI Mtn IL t_del

SERVO	**Can be changed:** U, T		**Access level:** 4
	Data type: Floating Point	**Data set:** -	**Function diagram:** -
	P-Group: Safety Integrated	**Units group:** TIME_M3	**Unit selection:** -
	Min	**Max**	**Factory setting**
	0.00 [ms]	10000.00 [ms]	100.00 [ms]

Description: Sets the delay time for the safe pulse cancellation after STOP B.
Dependency: Refer to: p9560
Refer to: C01701
Note: A change only becomes effective after a POWER ON.

p9557 SI motion pulse cancelation test time / SI Mtn IL t_test

SERVO	**Can be changed:** U, T		**Access level:** 4
	Data type: Floating Point	**Data set:** -	**Function diagram:** -
	P-Group: Safety Integrated	**Units group:** TIME_M3	**Unit selection:** -
	Min	**Max**	**Factory setting**
	0.00 [ms]	10000.00 [ms]	100.00 [ms]

Description: Sets the time after which the pulses must have been cancelled when initiating the test stop.
Dependency: Refer to: C01798
Note: A change only becomes effective after a POWER ON.

p9558 SI motion acceptance test mode, time limit / SI Mtn t_accept

SERVO	**Can be changed:** U, T		**Access level:** 4
	Data type: Floating Point	**Data set:** -	**Function diagram:** -
	P-Group: Safety Integrated	**Units group:** TIME_M3	**Unit selection:** -
	Min	**Max**	**Factory setting**
	5000.00 [ms]	100000.00 [ms]	40000.00 [ms]

Description: Sets the maximum time for the acceptance test mode.
If the acceptance test mode takes longer than the selected time limit, then the mode is automatically terminated.
Dependency: Refer to: C01799
Note: A change only becomes effective after a POWER ON.

p9560 SI motion pulse cancellation shutdown speed / SI Mtn IL n_shutd

SERVO	**Can be changed:** U, T		**Access level:** 4
	Data type: Floating Point	**Data set:** -	**Function diagram:** -
	P-Group: Safety Integrated	**Units group:** SPEED_LIN_METRIC	**Unit selection:** -
	Min	**Max**	**Factory setting**
	0.00 [mm/min]	6000.00 [mm/min]	0.00 [mm/min]

Description: Sets the velocity, under which the axis is considered to be "stationary" and for a STOP B, the pulses are cancelled (by changing to STOP A).
Dependency: Refer to: p9556
Note: A change only becomes effective after a POWER ON.

© Siemens AG, 2005. All rights reserved

p9560 SI motion pulse cancellation shutdown speed / SI Mtn IL n_shutd

SERVO (Safety rot)	**Can be changed:** U, T		**Access level:** 4
	Data type: Floating Point	**Data set:** -	**Function diagram:** -
	P-Group: Safety Integrated	**Units group:** SPEED_ROT	**Unit selection:** -
	Min	**Max**	**Factory setting**
	0.00 [1/min]	6000.00 [1/min]	0.00 [1/min]

Description: Sets the velocity, under which the axis is considered to be "stationary" and for a STOP B, the pulses are cancelled (by changing to STOP A).

Dependency: Refer to: p9556

Note: A change only becomes effective after a POWER ON.

p9561 SI motion SG stop response / SI Mtn SG stop res

SERVO	**Can be changed:** U, T		**Access level:** 4
	Data type: Integer16	**Data set:** -	**Function diagram:** -
	P-Group: Safety Integrated	**Units group:** -	**Unit selection:** -
	Min	**Max**	**Factory setting**
	0	14	5

Description: Sets the stop response for the function "safely reduced speed" (SG).
This setting applies for all SG limit values.
An input value of less than 5 signifies personnel protection, from 10 and upwards, machine protection.

Values:
0: STOP A
1: STOP B
2: STOP C
3: STOP D
4: STOP E
5: Sets the stop response via p9563 (SG-specific)
10: STOP A with delayed pulse cancellation when the bus fails
11: STOP B with delayed pulse cancellation when the bus fails
12: STOP C with delayed pulse cancellation when the bus fails
13: STOP D with delayed pulse cancellation when the bus fails
14: STOP E with delayed pulse cancellation when the bus fails

Dependency: Refer to: p9531, p9563, p9580

Note: A change only becomes effective after a POWER ON.

p9562 SI motion SE stop response / SI Mtn SE stop res

SERVO	**Can be changed:** U, T		**Access level:** 4
	Data type: Integer16	**Data set:** -	**Function diagram:** -
	P-Group: Safety Integrated	**Units group:** -	**Unit selection:** -
	Min	**Max**	**Factory setting**
	2	4	2

Description: Sets the stop response for the function "safe software limit switch" (SE).

Values:
2: STOP C
3: STOP D
4: STOP E

Dependency: Refer to: p9534, p9535

Note: A change only becomes effective after a POWER ON.

© Siemens AG, 2005. All rights reserved

p9563[0...3] SI motion SG-specific stop response / SI Mtn SGspec stop

SERVO	**Can be changed:** U, T		**Access level:** 4
	Data type: Integer16	**Data set:** -	**Function diagram:** -
	P-Group: Safety Integrated	**Units group:** -	**Unit selection:** -
	Min	**Max**	**Factory setting**
	0	14	2

Description: Sets the stop response for the function "safely reduced speed" (SG, SG-specific).
This setting applies to the individual SG limit values.

Values:
0: STOP A
1: STOP B
2: STOP C
3: STOP D
4: STOP E
10: STOP A with delayed pulse cancellation when the bus fails
11: STOP B with delayed pulse cancellation when the bus fails
12: STOP C with delayed pulse cancellation when the bus fails
13: STOP D with delayed pulse cancellation when the bus fails
14: STOP E with delayed pulse cancellation when the bus fails

Index:
[0] = Limit value SG1
[1] = Limit value SG2
[2] = Limit value SG3
[3] = Limit value SG4

Dependency: Refer to: p9531, p9561, p9580

Note: A change only becomes effective after a POWER ON.

p9570 SI motion acceptance test mode / SI Mtn Acc_mode

SERVO	**Can be changed:** U, T		**Access level:** 4
	Data type: Integer16	**Data set:** -	**Function diagram:** -
	P-Group: Safety Integrated	**Units group:** -	**Unit selection:** -
	Min	**Max**	**Factory setting**
	0000 hex	00AC hex	0000 hex

Description: Setting to select and de-select the acceptance test mode.

Values:
0: [00 hex] De-select the acceptance test mode
172: [AC hex] Select the acceptance test mode

Dependency: Refer to: p9558, r9571
Refer to: C01799

r9571 SI motion acceptance test status / SI Mtn acc_status

SERVO	**Can be changed:** -		**Access level:** 4
	Data type: Integer16	**Data set:** -	**Function diagram:** -
	P-Group: Safety Integrated	**Units group:** -	**Unit selection:** -
	Min	**Max**	**Factory setting**
	-	-	-

Description: Displays the status of the acceptance test mode.

Values:
0: [00 hex] Acc_mode inactive
12: [0C hex] Acc_mode not possible due to POWER ON fault
13: [0D hex] Acc_mode not possible due to incorrect ID in p9570
15: [0F hex] Acc_mode not possible due to expired Acc_timer
172: [AC hex] Acc_mode active

Dependency: Refer to: p9558, p9570
Refer to: C01799

© Siemens AG, 2005. All rights reserved

p9580 SI motion pulse cancellation delay time after bus failure / SI Mtn t to IL

SERVO	**Can be changed:** U, T		**Access level:** 4
	Data type: Floating Point	**Data set:** -	**Function diagram:** -
	P-Group: Safety Integrated	**Units group:** TIME_M3	**Unit selection:** -
	Min	**Max**	**Factory setting**
	0.00 [ms]	800.00 [ms]	0.00 [ms]

Description: Sets the delay time after which the pulses are safely cancelled after a bus failure.
Dependency: Refer to: p9561, p9563
Note: A change only becomes effective after a POWER ON.

r9590[0...2] SI motion version, safe motion monitoring functions / SI Mtn version

SERVO	**Can be changed:** -		**Access level:** 4
	Data type: Unsigned16	**Data set:** -	**Function diagram:** -
	P-Group: Safety Integrated	**Units group:** -	**Unit selection:** -
	Min	**Max**	**Factory setting**
	-	-	-

Description: Displays the Safety Integrated version for the safe monitoring functions.
Index: [0] = Safety Version (major release)
[1] = Safety Version (minor release)
[2] = Safety Version (baselevel or patch)
Dependency: Refer to: r9770, r9870, r9890
Note: Example:
r9590[0] = 2, r9590[1] = 3, r9590[2] = 1 --> SI motion version V02.03.01

p9601 SI enables safety functions (Control Unit) / SI enable fct CU

SERVO, VECTOR	**Can be changed:** C2		**Access level:** 3
	Data type: Unsigned32	**Data set:** -	**Function diagram:** -
	P-Group: Safety Integrated	**Units group:** -	**Unit selection:** -
	Min	**Max**	**Factory setting**
	0000 bin	0001 bin	0000 bin

Description: Sets the enable signals for safety functions on the Control Unit.

Bit field:	**Bit**	**Signal name**	**0 signal**	**1 signal**	**FP**
	00	Enable SH via terminal (Control Unit)	Inhibit	Enable	2810

Dependency: Refer to: p9801
Note: CU: Control Unit
SH: Safe standstill
SI: Safety Integrated

p9602 SI enable safe brake control (Control Unit) / SI enable SBC CU

SERVO, VECTOR	**Can be changed:** C2		**Access level:** 3
	Data type: Integer16	**Data set:** -	**Function diagram:** 2814
	P-Group: Safety Integrated	**Units group:** -	**Unit selection:** -
	Min	**Max**	**Factory setting**
	0	1	0

Description: Sets the enable signal for the function "Safe brake control" (SBC) on the Control Unit.
Values: 0: Inhibit SBC
1: Enable SBC
Dependency: Refer to: p9802

© Siemens AG, 2005. All rights reserved

Note: The "safe brake control" function is not activated until at least one safety monitoring function has been enabled (i.e. p9601 not equal to 0).
The parameterization "no motor holding brake available" and "safe brake control" enabled (p1215 = 0, p9602 = p9802 = 1) is not practical if there is no motor holding brake.
CU: Control Unit
SBC: Safe brake control
SI: Safety Integrated

p9620 BI: SI signal source for safe standstill (Control Unit) / SI select SH CU

SERVO, VECTOR	**Can be changed:** C2		**Access level:** 3
	Data type: Unsigned32	**Data set:** -	**Function diagram:** 2810
	P-Group: Safety Integrated	**Units group:** -	**Unit selection:** -
	Min	**Max**	**Factory setting**
	-	-	0

Description: Sets the signal source for the function "Safe standstill" (SH) on the Control Unit.
Dependency: Refer to: p9601
Note: The following signal sources are permitted:
- fixed zero (standard setting)
- digital inputs (DI 0 to DI 7 on the Control Unit
- or DI 0 to 3 on the CX32
A link to a digital input, that is in the simulation mode, is not permitted.

p9650 SI SGE changeover tolerance time (Control Unit) / SI SGE_chg tol CU

SERVO, VECTOR	**Can be changed:** C2		**Access level:** 3
	Data type: Floating Point	**Data set:** -	**Function diagram:** 2810
	P-Group: Safety Integrated	**Units group:** TIME_M3	**Unit selection:** -
	Min	**Max**	**Factory setting**
	0.00 [ms]	2000.00 [ms]	500.00 [ms]

Description: Sets the tolerance time to change over the safety-related inputs (SGE) on the Control Unit.
An SGE changeover is not simultaneously effective due to the different runtimes in the two monitoring channels. After an SGE changeover, dynamic data is not subject to a crosswise data comparison during this tolerance time.
Dependency: Refer to: p9850
Note: For a crosswise data comparison between p9650 and p9850, a difference of one Safety monitoring clock cycle is tolerated.
The parameterized time is internally rounded-off to an integer multiple of the monitoring clock cycle.
SGE: Safety-related input (e.g. SH terminals)

p9658 SI transition time STOP F to STOP A (Control Unit) / SI STOP F->A CU

SERVO, VECTOR	**Can be changed:** C2		**Access level:** 3
	Data type: Floating Point	**Data set:** -	**Function diagram:** 2802
	P-Group: Safety Integrated	**Units group:** TIME_M3	**Unit selection:** -
	Min	**Max**	**Factory setting**
	0.00 [ms]	30000.00 [ms]	0.00 [ms]

Description: Sets the transition period from STOP F to STOP A on the Control Unit.
Dependency: Refer to: r9795, p9858
Refer to: F01611
Note: For a crosswise data comparison between p9658 and p9858, a difference of one Safety monitoring clock cycle is tolerated.
The parameterized time is internally rounded-off to an integer multiple of the monitoring clock cycle.
STOP F: Defect in a monitoring channel (error in the crosswise data comparison)
STOP A: Pulse cancellation via the safety shutdown path

© Siemens AG, 2005. All rights reserved

p9659 SI forced checking procedure timer / SI FrcdCkProcTimer

SERVO, VECTOR	**Can be changed:** C2		**Access level:** 3
	Data type: Floating Point	**Data set:** -	**Function diagram:** 2810
	P-Group: Safety Integrated	**Units group:** TIME_H	**Unit selection:** -
	Min	**Max**	**Factory setting**
	0.00 [h]	9000.00 [h]	8.00 [h]

Description: Sets the time to carry-out the dynamic update and testing the safety shutdown paths (forced checking procedure).
Within the parameterized time, safe standstill must have been de-selected at least once. The monitoring time is reset each time that SH is de-selected.

Dependency: Refer to: A01699

r9710[0...1] SI motion diagnostics result list 1 / SI Mtn res_list 1

SERVO	**Can be changed:** -		**Access level:** 4
	Data type: Unsigned32	**Data set:** -	**Function diagram:** -
	P-Group: -	**Units group:** -	**Unit selection:** -
	Min	**Max**	**Factory setting**
	-	-	-

Description: Displays result list 1, that for the crosswise data comparison with the control, led to the fault.

Index: [0] = Result list, control
[1] = Result list, drive

Bit field:

Bit	Signal name	0 signal	1 signal	FP
00	Actual value > upper limit, SBH	No	Yes	-
01	Actual value > lower limit, SBH	No	Yes	-
02	Actual value > upper limit, SE1	No	Yes	-
03	Actual value > lower limit, SE1	No	Yes	-
04	Actual value > upper limit, SE2	No	Yes	-
05	Actual value > lower limit, SE2	No	Yes	-
06	Actual value > upper limit, SG1	No	Yes	-
07	Actual value > lower limit, SG1	No	Yes	-
08	Actual value > upper limit, SG2	No	Yes	-
09	Actual value > lower limit, SG2	No	Yes	-
10	Actual value > upper limit, SG3	No	Yes	-
11	Actual value > lower limit, SG3	No	Yes	-
12	Actual value > upper limit, SG4	No	Yes	-
13	Actual value > lower limit, SG4	No	Yes	-
16	Actual value > upper limit, SBR	No	Yes	-
17	Actual value > lower limit, SBR	No	Yes	-

Dependency: Refer to: C01711

© Siemens AG, 2005. All rights reserved

r9711[0...1] SI motion diagnostics result list 2 / SI Mtn res_list 2

SERVO

Can be changed: -
Access level: 4
Data type: Unsigned32
Data set: -
Function diagram: -
P-Group: -
Units group: -
Unit selection: -

Min	Max	Factory setting
-	-	-

Description: Displays result list 2, that for the crosswise data comparison with the control, led to the fault.

Index: [0] = Result list, control
[1] = Result list, drive

Bit field:

Bit	Signal name	0 signal	1 signal	FP
00	Actual value > upper limit, SN1+	No	Yes	-
01	Actual value > lower limit, SN1+	No	Yes	-
02	Actual value > upper limit, SN1-	No	Yes	-
03	Actual value > lower limit, SN1-	No	Yes	-
04	Actual value > upper limit, SN2+	No	Yes	-
05	Actual value > lower limit, SN2+	No	Yes	-
06	Actual value > upper limit, SN2-	No	Yes	-
07	Actual value > lower limit, SN2-	No	Yes	-
08	Actual value > upper limit, SN3+	No	Yes	-
09	Actual value > lower limit, SN3+	No	Yes	-
10	Actual value > upper limit, SN3-	No	Yes	-
11	Actual value > lower limit, SN3-	No	Yes	-
12	Actual value > upper limit, SN4+	No	Yes	-
13	Actual value > lower limit, SN4+	No	Yes	-
14	Actual value > upper limit, SN4-	No	Yes	-
15	Actual value > lower limit, SN4-	No	Yes	-
16	Actual value > upper limit, n_x+	No	Yes	-
17	Actual value > lower limit, n_x+	No	Yes	-
18	Actual value > upper limit, n_x-	No	Yes	-
19	Actual value > lower limit, n_x-	No	Yes	-
20	Actual value > upper limit, modulo	No	Yes	-
21	Actual value > lower limit, modulo	No	Yes	-

Dependency: Refer to: C01711

r9718 CO/BO: SI motion control signals 1 / SI Mtn ctrl_sig 1

SERVO

Can be changed: -
Access level: 4
Data type: Unsigned32
Data set: -
Function diagram: -
P-Group: Safety Integrated
Units group: -
Unit selection: -

Min	Max	Factory setting
-	-	-

Description: Control signal 1 for safety-relevant motion monitoring functions.

Bit field:

Bit	Signal name	0 signal	1 signal	FP
23	Set offset for TfS to the actual torque	Reset	Set	-

Note: TfS: Traverse to fixed endstop

r9719 CO/BO: SI motion control signals 2 / SI Mtn ctrl_sig 2

SERVO

Can be changed: -
Access level: 4
Data type: Unsigned32
Data set: -
Function diagram: -
P-Group: Safety Integrated
Units group: -
Unit selection: -

Min	Max	Factory setting
-	-	-

Description: Control signal 2 for safety-relevant motion monitoring functions.

Bit field:

Bit	Signal name	0 signal	1 signal	FP
13	Control signal, close brake from control	No	Yes	-

© Siemens AG, 2005. All rights reserved

r9725 SI motion, diagnostics STOP F / SI Mtn Diag STOP F

SERVO	**Can be changed:** -		**Access level:** 4
	Data type: Unsigned32	**Data set:** -	**Function diagram:** -
	P-Group: -	**Units group:** -	**Unit selection:** -
	Min	**Max**	**Factory setting**
	-	-	-

Description: Displays the message value that resulted in the STOP F on the drive.
Value = 0 means:
The controlled signaled a STOP F.
Value = 1 ... 999 means:
Number of the incorrect crosswise compared data between the drive and control.
Value >= 1000 means:
Additional diagnostic values of the drive.

Dependency: Refer to: C01711

Note: The significance of the individual values is described in message 27001 of the higher-level control.

p9726 SI motion, user agreement selection/de-selection / SI Mtn UserAgr sel

SERVO	**Can be changed:** U, T		**Access level:** 4
	Data type: Integer16	**Data set:** -	**Function diagram:** -
	P-Group: -	**Units group:** -	**Unit selection:** -
	Min	**Max**	**Factory setting**
	0000 hex	00AC hex	0000 hex

Description: Setting to select and de-select the user agreement.

Values:
0: [00 hex] De-select user agreement
172: [AC hex] Select user agreement

Dependency: Refer to: r9727

r9727 SI motion user agreement, inside the drive / SI Mtn UserAgr int

SERVO	**Can be changed:** -		**Access level:** 3
	Data type: Integer16	**Data set:** -	**Function diagram:** -
	P-Group: -	**Units group:** -	**Unit selection:** -
	Min	**Max**	**Factory setting**
	-	-	-

Description: Displays the internal state of the user agreement.
Value = 0: User agreement is not set.
Value = AC hex: User agreement is set.

Dependency: Refer to: p9726

r9728[0...1] SI motion actual checksum, SI parameters / SI Mtn act CRC

SERVO	**Can be changed:** -		**Access level:** 4
	Data type: Unsigned32	**Data set:** -	**Function diagram:** -
	P-Group: Safety Integrated	**Units group:** -	**Unit selection:** -
	Min	**Max**	**Factory setting**
	-	-	-

Description: Displays the checksum over the checked Safety Integrated parameters of the motion monitoring functions (actual checksum).

Index:
[0] = Check sum over SI parameters for motion monitoring
[1] = Check sum over SI parameters for actual values

Dependency: Refer to: p9729
Refer to: F01680

© Siemens AG, 2005. All rights reserved

p9729[0...1] SI motion reference checksum, SI parameters / SI Mtn ref CRC

SERVO	**Can be changed:** U, T		**Access level:** 4
	Data type: Unsigned32	**Data set:** -	**Function diagram:** -
	P-Group: Safety Integrated	**Units group:** -	**Unit selection:** -
	Min	**Max**	**Factory setting**
	0000 hex	FFFF FFFF hex	0000 hex

Description: Sets the checksum using the checksum-tested Safety Integrated parameters for motion monitoring functions (reference checksum).

Index: [0] = Check sum over SI parameters for motion monitoring
[1] = Check sum over SI parameters for actual values

Dependency: Refer to: r9728
Refer to: F01680

r9744 SI message buffer changes, counter / SI msg_buffer chng

SERVO, TM41	**Can be changed:** -		**Access level:** 4
	Data type: Unsigned16	**Data set:** -	**Function diagram:** -
	P-Group: Messages	**Units group:** -	**Unit selection:** -
	Min	**Max**	**Factory setting**
	-	-	-

Description: Displays the changes of the safety message buffer. This counter is incremented every time that the safety message buffer changes.

Recommendation: This is used to check whether the safety message buffer has been read-out consistently.

Dependency: Refer to: r9747, r9748, r9749, p9752, r9753, r9754, r9755, r9756, p9759

r9747[0...63] SI message code / SI msg_code

SERVO, TM41	**Can be changed:** -		**Access level:** 4
	Data type: Unsigned16	**Data set:** -	**Function diagram:** -
	P-Group: Messages	**Units group:** -	**Unit selection:** -
	Min	**Max**	**Factory setting**
	-	-	-

Description: Displays the numbers of safety messages that have occurred.

Dependency: Refer to: r9744, r9748, r9749, p9752, r9753, r9754, r9755, r9756, p9759

Note: The messages type "safety message" (Cxxxxx) are entered in the message fault buffer.

r9748[0...63] SI message time received in milliseconds / SI t_msg recv ms

SERVO, TM41	**Can be changed:** -		**Access level:** 4
	Data type: Unsigned32	**Data set:** -	**Function diagram:** -
	P-Group: Messages	**Units group:** TIME_M3	**Unit selection:** -
	Min	**Max**	**Factory setting**
	- [ms]	- [ms]	- [ms]

Description: Displays the relative system runtime in milliseconds when the safety message occurred.

Dependency: Refer to: r9744, r9747, r9749, p9752, r9753, r9754, r9755, r9756, p9759

© Siemens AG, 2005. All rights reserved

r9749[0...63] SI message value / SI msg_value

SERVO, TM41	**Can be changed:** -		**Access level:** 4
	Data type: Integer32	**Data set:** -	**Function diagram:** -
	P-Group: Messages	**Units group:** -	**Unit selection:** -
	Min	**Max**	**Factory setting**
	-	-	-

Description: Displays the additional information about the safety message that occurred (as integer number).
Dependency: Refer to: r9744, r9747, r9748, p9752, r9753, r9754, r9755, r9756, p9759

p9752 SI message cases, counter / SI msg_cases count

SERVO, TM41	**Can be changed:** U, T		**Access level:** 4
	Data type: Unsigned16	**Data set:** -	**Function diagram:** -
	P-Group: Messages	**Units group:** -	**Unit selection:** -
	Min	**Max**	**Factory setting**
	0	65535	0

Description: Number of safety messages that have occurred since the last reset.
Dependency: The safety message buffer is cleared by resetting the parameter to 0.
Refer to: r9744, r9747, r9748, r9749, r9753, r9754, r9755, r9756, p9759
Note: The parameter is reset to 0 at POWER ON.

r9753[0...63] SI message value for float values / SI msg_val float

SERVO, TM41	**Can be changed:** -		**Access level:** 4
	Data type: Floating Point	**Data set:** -	**Function diagram:** -
	P-Group: Messages	**Units group:** -	**Unit selection:** -
	Min	**Max**	**Factory setting**
	-	-	-

Description: Displays additional information about the safety message that has occurred for float values.
Dependency: Refer to: r9744, r9747, r9748, r9749, p9752, r9754, r9755, r9756, p9759

r9754[0...63] SI message time received in days / SI t_msg recv days

SERVO, TM41	**Can be changed:** -		**Access level:** 4
	Data type: Unsigned16	**Data set:** -	**Function diagram:** -
	P-Group: Messages	**Units group:** -	**Unit selection:** -
	Min	**Max**	**Factory setting**
	-	-	-

Description: Displays the relative system runtime in days when the safety message occurred.
Dependency: Refer to: r9744, r9747, r9748, r9749, p9752, r9753, r9755, r9756, p9759

r9755[0...63] SI message time removed in milliseconds / SI t_msg rem ms

SERVO, TM41	**Can be changed:** -		**Access level:** 4
	Data type: Unsigned32	**Data set:** -	**Function diagram:** -
	P-Group: Messages	**Units group:** TIME_M3	**Unit selection:** -
	Min	**Max**	**Factory setting**
	- [ms]	- [ms]	- [ms]

Description: Displays the relative system runtime in milliseconds when the safety message was removed.
Dependency: Refer to: r9744, r9747, r9748, r9749, p9752, r9753, r9754, r9756, p9759

© Siemens AG, 2005. All rights reserved

r9756[0...63] SI message time removed in days / SI t_msg rem days

SERVO, TM41

Can be changed: -		**Access level:** 4
Data type: Unsigned16	**Data set:** -	**Function diagram:** -
P-Group: Messages	**Units group:** -	**Unit selection:** -
Min	**Max**	**Factory setting**
-	-	-

Description: Displays the relative system runtime in days when the safety message was removed.
Dependency: Refer to: r9744, r9747, r9748, r9749, p9752, r9753, r9754, r9755, p9759

p9759 SI, acknowledge messages, drive object / SI msg ackn DO

SERVO, TM41

Can be changed: U, T		**Access level:** 4
Data type: Unsigned8	**Data set:** -	**Function diagram:** -
P-Group: Messages	**Units group:** -	**Unit selection:** -
Min	**Max**	**Factory setting**
0	1	0

Description: Acknowledges all safety messages present for a drive object.
Dependency: Refer to: r9744, r9747, r9748, r9749, p9752, r9753, r9754, r9755, r9756
Note: Parameter should be set from 0 to 1 to acknowledge.
After acknowledgement, the parameter is automatically reset to 0.

p9761 SI password input / SI password input

SERVO, VECTOR

Can be changed: C1, T		**Access level:** 3
Data type: Unsigned32	**Data set:** -	**Function diagram:** 2800
P-Group: Safety Integrated	**Units group:** -	**Unit selection:** -
Min	**Max**	**Factory setting**
0000 hex	FFFF FFFF hex	0000 hex

Description: Enters the Safety Integrated password.
Dependency: Refer to: F01659
Note: It is not permissible to change Safety Integrated parameter settings until the Safety Integrated password has been entered.

p9762 SI password new / SI password new

SERVO, VECTOR

Can be changed: C2		**Access level:** 3
Data type: Unsigned32	**Data set:** -	**Function diagram:** 2800
P-Group: Safety Integrated	**Units group:** -	**Unit selection:** -
Min	**Max**	**Factory setting**
0000 hex	FFFF FFFF hex	0000 hex

Description: Enters a new Safety Integrated password.
Dependency: A change made to the Safety Integrated password must be acknowledged in the following parameter:
Refer to: p9763

© Siemens AG, 2005. All rights reserved

p9763 SI password acknowledgment / SI ackn password

SERVO, VECTOR	**Can be changed:** C2		**Access level:** 3
	Data type: Unsigned32	**Data set:** -	**Function diagram:** 2800
	P-Group: Safety Integrated	**Units group:** -	**Unit selection:** -
	Min	**Max**	**Factory setting**
	0000 hex	FFFF FFFF hex	0000 hex

Description: Acknowledges the new Safety Integrated password.

Dependency: Refer to: p9762

Note: The new password entered into p9762 must be re-entered in order to acknowledge.

p9762 = p9763 = 0 is automatically set after the new Safety Integrated password has been successfully acknowledged.

r9770[0...2] SI vers. safety fcts that run indep. in the drive (Control Unit) / SI version Drv CU

SERVO, VECTOR	**Can be changed:** -		**Access level:** 3
	Data type: Unsigned16	**Data set:** -	**Function diagram:** 2802
	P-Group: Safety Integrated	**Units group:** -	**Unit selection:** -
	Min	**Max**	**Factory setting**
	-	-	-

Description: Displays the Safety Integrated version for the safety functions that run independently in the drive on the Control Unit.

Index: [0] = Safety Version (major release)
[1] = Safety Version (minor release)
[2] = Safety Version (baselevel or patch)

Dependency: Refer to: r9870, r9890

Note: Example:

r9770[0] = 2, r9770[1] = 3, r9770[2] = 1 --> Safety-Version V02.03.01

r9771 SI common functions (Control Unit) / SI common fct CU

SERVO, VECTOR	**Can be changed:** -		**Access level:** 3
	Data type: Unsigned32	**Data set:** -	**Function diagram:** 2804
	P-Group: Safety Integrated	**Units group:** -	**Unit selection:** -
	Min	**Max**	**Factory setting**
	-	-	-

Description: Displays the safety integrated monitoring functions supported on the Control Unit and Motor Module.

The Control Unit determines this display.

Bit field:

Bit	Signal name	0 signal	1 signal	FP
00	SH supported via terminal	No	Yes	-
01	SBC supported	No	Yes	-
02	SI Motion supported	No	Yes	-

Dependency: Refer to: r9871

Note: CU: Control Unit

SBC: Safe brake control

SH: Safe standstill

SI: Safety Integrated

© Siemens AG, 2005. All rights reserved

r9772 CO/BO: SI status (Control Unit) / SI stat CU

SERVO, VECTOR

Can be changed: -
Access level: 2
Data type: Unsigned32
Data set: -
Function diagram: 2804
P-Group: Safety Integrated
Units group: -
Unit selection: -

Min	Max	Factory setting
-	-	-

Description: Displays the Safety Integrated status on the Control Unit.

Bit field:

Bit	Signal name	0 signal	1 signal	FP
00	SH selected on Control Unit	No	Yes	2810
01	SH active on the Control Unit	No	Yes	2810
04	SBC requested	No	Yes	2814
09	STOP A cannot be acknowledged, active	No	Yes	2802
10	STOP A active	No	Yes	2802
15	STOP F active	No	Yes	2802

Dependency: Refer to: r9872

r9773 CO/BO: SI status (Control Unit + Motor Module) / SI stat CU+MM

SERVO, VECTOR

Can be changed: -
Access level: 2
Data type: Unsigned32
Data set: -
Function diagram: 2804
P-Group: Safety Integrated
Units group: -
Unit selection: -

Min	Max	Factory setting
-	-	-

Description: Displays the Safety Integrated status on the drive (Control Unit + Motor Module).

Bit field:

Bit	Signal name	0 signal	1 signal	FP
00	SH in the drive selected	No	Yes	2804
01	SH in the drive active	No	Yes	2804
04	SBC requested	No	Yes	2804
31	Shutdown paths must be tested	No	Yes	2810

Note: This status is formed from the AND operation of the relevant status of the two monitoring channels.

r9774 CO/BO: SI status (safe standstill group) / SI stat group SH

SERVO, VECTOR

Can be changed: -
Access level: 2
Data type: Unsigned32
Data set: -
Function diagram: 2804
P-Group: Safety Integrated
Units group: -
Unit selection: -

Min	Max	Factory setting
-	-	-

Description: Displays the status for Safety Integrated of the group to which this drive belongs.
These signals are an AND logic operation of the individual status signals of the drives included in this group.

Bit field:

Bit	Signal name	0 signal	1 signal	FP
00	SH selected in group	No	Yes	2804
01	SH active in group	No	Yes	2804
04	SBC in group requested	No	Yes	2804
31	Shutdown paths of the group must be tested	No	Yes	2804

Dependency: Refer to: p9620, r9773

Note: A group is formed by appropriately grouping the terminals for "safe standstill".
The status of a group of n drives is, for drives 1 to n - 1 displayed with a delay of one monitoring clock cycle; this is a system-related effect.

© Siemens AG, 2005. All rights reserved

r9780 SI monitoring clock cycle (Control Unit) / SI monitor_clck CU

SERVO, VECTOR	**Can be changed:** -		**Access level:** 3
	Data type: Floating Point	**Data set:** -	**Function diagram:** 2802
	P-Group: Safety Integrated	**Units group:** TIME_M3	**Unit selection:** -
	Min	**Max**	**Factory setting**
	- [ms]	- [ms]	- [ms]

Description: Displays the clock cycle time for the safety functions on the Control Unit.
Dependency: Refer to: r9880

r9794[0...19] SI crosswise comparison list (Control Unit) / SI KDV_list CU

SERVO, VECTOR	**Can be changed:** -		**Access level:** 3
	Data type: Unsigned16	**Data set:** -	**Function diagram:** 2802
	P-Group: Safety Integrated	**Units group:** -	**Unit selection:** -
	Min	**Max**	**Factory setting**
	-	-	-

Description: Displays the number of the data that are being presently compared crosswise on the Control Unit.
Example:
r9794[0] = 1 (monitoring clock cycle)
r9794[1] = 2 (enable safety-related functions)
r9794[2] = 3 (SGE changeover, tolerance time)
r9794[3] = 4 (transition time, STOP F to STOP A)
...
The list of crosswise compared data is obtained dependent on the particular application.
Dependency: Refer to: r9894
Note: The complete list of numbers for crosswise data comparison is listed in Fault F01611.

r9795 SI diagnostics STOP F (Control Unit) / SI diag STOP F CU

SERVO, VECTOR	**Can be changed:** -		**Access level:** 2
	Data type: Unsigned32	**Data set:** -	**Function diagram:** 2802
	P-Group: Safety Integrated	**Units group:** -	**Unit selection:** -
	Min	**Max**	**Factory setting**
	-	-	-

Description: Displays the number of the cross-checked data which has caused STOP F on the Control Unit.
Dependency: Refer to: r9895
Refer to: F01611
Note: The complete list of numbers for crosswise data comparison is listed in Fault F01611.

r9798 SI actual checksum SI parameters (Control Unit) / SI act_checksum CU

SERVO, VECTOR	**Can be changed:** -		**Access level:** 3
	Data type: Unsigned32	**Data set:** -	**Function diagram:** 2800
	P-Group: Safety Integrated	**Units group:** -	**Unit selection:** -
	Min	**Max**	**Factory setting**
	-	-	-

Description: Displays the checksum over the checked Safety Integrated parameters on the Control Unit (actual checksum).
Dependency: Refer to: p9799, r9898

© Siemens AG, 2005. All rights reserved

p9799 SI reference checksum SI parameters (Control Unit) / SI set_checksum CU

SERVO, VECTOR

Can be changed: C2		**Access level:** 3
Data type: Unsigned32	**Data set:** -	**Function diagram:** 2800
P-Group: Safety Integrated	**Units group:** -	**Unit selection:** -
Min	**Max**	**Factory setting**
0000 hex	FFFF FFFF hex	0000 hex

Description: Sets the checksum for the checked Safety Integrated parameters on the Control Unit (reference checksum).

Dependency: Refer to: r9798, p9899

p9801 SI enables safety functions (Motor Module) / SI enable fct MM

SERVO, VECTOR

Can be changed: C2		**Access level:** 3
Data type: Unsigned16	**Data set:** -	**Function diagram:** -
P-Group: Safety Integrated	**Units group:** -	**Unit selection:** -
Min	**Max**	**Factory setting**
0000 bin	0001 bin	0000 bin

Description: Sets the enable signals for safety functions on the Motor Module.

Bit field:

Bit	Signal name	0 signal	1 signal	FP
00	Enable SH via terminal (Motor Module)	Inhibit	Enable	2810

Dependency: Refer to: p9601

Note: MM: Motor Module
SH: Safe standstill
SI: Safety Integrated

p9802 SI enable safe brake control (Motor Module) / SI enable SBC MM

SERVO, VECTOR

Can be changed: C2		**Access level:** 3
Data type: Integer32	**Data set:** -	**Function diagram:** 2814
P-Group: Safety Integrated	**Units group:** -	**Unit selection:** -
Min	**Max**	**Factory setting**
0	1	0

Description: Sets the enable signal for the "Safe brake control" function (SBC) on the Motor Module.
0: Inhibit SBC
1: Enable SBC

Dependency: Refer to: p9602

Note: The "safe brake control" function is not activated until at least one safety monitoring function has been enabled (i.e. p9801 not equal to 0).
The parameterization "no motor holding brake available" and "safe brake control" enabled (p1215 = 0, p9602 = p9802 = 1) is not practical if there is no motor holding brake.
MM: Motor Module
SBC: Safe brake control
SI: Safety Integrated

p9810 SI PROFIsafe address (Motor Module) / SI PROFIsafe MM

SERVO, VECTOR

Can be changed: C2		**Access level:** 3
Data type: Unsigned16	**Data set:** -	**Function diagram:** -
P-Group: Safety Integrated	**Units group:** -	**Unit selection:** -
Min	**Max**	**Factory setting**
0000 hex	FFFE hex	0000 hex

Description: Sets the PROFIsafe address of the Motor Module.

© Siemens AG, 2005. All rights reserved

p9850 SI SGE changeover tolerance time (Motor Module) / SI SGE_chg tol MM

SERVO, VECTOR	**Can be changed:** C2		**Access level:** 3
	Data type: Floating Point	**Data set:** -	**Function diagram:** 2810
	P-Group: Safety Integrated	**Units group:** TIME_M6	**Unit selection:** -
	Min	**Max**	**Factory setting**
	0.00 [µs]	2000000.00 [µs]	500000.00 [µs]

Description: Sets the tolerance time to change over the safety-related inputs (SGE) on the Motor Module.
An SGE changeover is not simultaneously effective due to the different runtimes in the two monitoring channels. After an SGE changeover, dynamic data is not subject to a crosswise data comparison during this tolerance time.

Dependency: Refer to: p9650

Note: For a crosswise data comparison between p9650 and p9850, a difference of one Safety monitoring clock cycle is tolerated.
The parameterized time is internally rounded-off to an integer multiple of the monitoring clock cycle.
SGE: Safety-related input (e.g. SH terminals)

p9858 SI transition time STOP F to STOP A (Control Unit) / SI STOP F->A MM

SERVO, VECTOR	**Can be changed:** C2		**Access level:** 3
	Data type: Floating Point	**Data set:** -	**Function diagram:** 2802
	P-Group: Safety Integrated	**Units group:** TIME_M6	**Unit selection:** -
	Min	**Max**	**Factory setting**
	0.00 [µs]	30000000.00 [µs]	0.00 [µs]

Description: Sets the transition period from STOP F to STOP A on the Motor Module.

Dependency: Refer to: p9658, r9895
Refer to: F30611

Note: For a crosswise data comparison between p9658 and p9858, a difference of one Safety monitoring clock cycle is tolerated.
The parameterized time is internally rounded-off to an integer multiple of the monitoring clock cycle.
STOP F: Defect in a monitoring channel (error in the crosswise data comparison)
STOP A: Pulse cancellation via the safety shutdown path

r9870[0...2] SI version (Motor Module) / SI version MM

SERVO, VECTOR	**Can be changed:** -		**Access level:** 3
	Data type: Unsigned16	**Data set:** -	**Function diagram:** 2802
	P-Group: Safety Integrated	**Units group:** -	**Unit selection:** -
	Min	**Max**	**Factory setting**
	-	-	-

Description: Displays the Safety Integrated version on the Motor Module.

Index: [0] = Safety Version (major release)
[1] = Safety Version (minor release)
[2] = Safety Version (baselevel or patch)

Dependency: Refer to: r9770, r9890

Note: Example:
r9870[0] = 2, r9870[1] = 3, r9870[2] = 1 --> Safety-Version V02.03.01

© Siemens AG, 2005. All rights reserved

r9871 SI common functions (Motor Module / SI general fct MM

SERVO, VECTOR

Can be changed: - **Access level:** 3
Data type: Unsigned32 **Data set:** - **Function diagram:** 2804
P-Group: Safety Integrated **Units group:** - **Unit selection:** -

Min	Max	Factory setting
-	-	-

Description: Displays the safety integrated monitoring functions supported on the Control Unit and Motor Module.
The Motor Module determines this display.

Bit field:

Bit	Signal name	0 signal	1 signal	FP
00	SH supported via terminal	No	Yes	-
01	SBC supported	No	Yes	-
02	SI Motion supported	No	Yes	-

Dependency: Refer to: r9771

Note: MM: Motor Module
SBC: Safe brake control
SH: Safe standstill
SI: Safety Integrated

r9872 CO/BO: SI status list (Motor Module) / SI status MM

SERVO, VECTOR

Can be changed: - **Access level:** 2
Data type: Unsigned32 **Data set:** - **Function diagram:** 2804
P-Group: Safety Integrated **Units group:** - **Unit selection:** -

Min	Max	Factory setting
-	-	-

Description: Displays the Safety Integrated status on the Motor Module.

Bit field:

Bit	Signal name	0 signal	1 signal	FP
00	SH on selected on Motor Module	No	Yes	2810
01	SH on Motor Module active	No	Yes	2810
04	SBC requested	No	Yes	2814
09	STOP A cannot be acknowledged, active	No	Yes	2802
10	STOP A active	No	Yes	2802
15	STOP F active	No	Yes	2802

Dependency: Refer to: r9772

r9880 SI monitoring clock cycle (Motor Module) / SI monitor_clck MM

SERVO, VECTOR

Can be changed: - **Access level:** 3
Data type: Floating Point **Data set:** - **Function diagram:** 2802
P-Group: Safety Integrated **Units group:** TIME_M3 **Unit selection:** -

Min	Max	Factory setting
- [ms]	- [ms]	- [ms]

Description: Displays the cycle time for the safety functions on the Motor Module.

Dependency: Refer to: r9780

r9881[0...11] SI motion Sensor Module Node Identifier control / SI Mtn SM node Id

SERVO

Can be changed: - **Access level:** 4
Data type: Unsigned8 **Data set:** - **Function diagram:** -
P-Group: - **Units group:** - **Unit selection:** -

Min	Max	Factory setting
-	-	-

Description: Displays the Node Identifier of the Sensor Module that is used by the control for the motion monitoring functions.

© Siemens AG, 2005. All rights reserved

r9890[0...2] SI version (Sensor Module) / SI version SM

SERVO	**Can be changed:** -		**Access level:** 3
	Data type: Unsigned16	**Data set:** -	**Function diagram:** -
	P-Group: Safety Integrated	**Units group:** -	**Unit selection:** -
	Min	**Max**	**Factory setting**
	-	-	-

Description: Displays the Safety Integrated version on the Sensor Module.
Index: [0] = Safety Version (major release)
[1] = Safety Version (minor release)
[2] = Safety Version (baselevel or patch)
Dependency: Refer to: r9770, r9870
Note: Example:
r9890[0] = 2, r9890[1] = 3, r9890[2] = 1 --> Safety-Version V02.03.01

r9894[0...19] SI crosswise comparison list (Motor Module) / SI KDV_list MM

SERVO, VECTOR	**Can be changed:** -		**Access level:** 3
	Data type: Unsigned16	**Data set:** -	**Function diagram:** 2802
	P-Group: Safety Integrated	**Units group:** -	**Unit selection:** -
	Min	**Max**	**Factory setting**
	-	-	-

Description: Displays the number of the data that are being presently compared crosswise on the Motor Module.
Example:
r9894[0] = 1 (monitoring clock cycle)
r9894[1] = 2 (enable safety-related functions)
r9894[2] = 3 (SGE changeover, tolerance time)
r9894[3] = 4 (transition time, STOP F to STOP A)
...
The list of crosswise compared data is obtained dependent on the particular application.
Dependency: Refer to: r9794
Note: The complete list of numbers for crosswise data comparison is listed in Fault F30611.

r9895 SI diagnostics STOP F (Motor Module) / SI diag STOP F MM

SERVO, VECTOR	**Can be changed:** -		**Access level:** 2
	Data type: Unsigned32	**Data set:** -	**Function diagram:** 2802
	P-Group: Safety Integrated	**Units group:** -	**Unit selection:** -
	Min	**Max**	**Factory setting**
	-	-	-

Description: Displays the number of the cross-checked data which has caused STOP F on the Motor Module.
Dependency: Refer to: r9795
Refer to: F30611
Note: The complete list of numbers for crosswise data comparison is listed in Fault F30611.

r9898 SI actual checksum SI parameters (Motor Module) / SI act_checksum MM

SERVO, VECTOR	**Can be changed:** -		**Access level:** 3
	Data type: Unsigned32	**Data set:** -	**Function diagram:** 2800
	P-Group: Safety Integrated	**Units group:** -	**Unit selection:** -
	Min	**Max**	**Factory setting**
	-	-	-

Description: Displays the checksum for the checked Safety Integrated parameters on the Motor Module (actual checksum).
Dependency: Refer to: r9798, p9899

© Siemens AG, 2005. All rights reserved

p9899 SI reference checksum SI parameters (Motor Module) / SI set_checksum MM

SERVO, VECTOR	**Can be changed:** C2		**Access level:** 3
	Data type: Unsigned32	**Data set:** -	**Function diagram:** 2800
	P-Group: Safety Integrated	**Units group:** -	**Unit selection:** -
	Min	**Max**	**Factory setting**
	0000 hex	FFFF FFFF hex	0000 hex

Description: Sets the checksum for the checked Safety Integrated parameters on the Motor Module (reference checksum).

Dependency: Refer to: p9799, r9898

p9904 Topology comparison, acknowledge differences / Topo_compare ackn

CU_S	**Can be changed:** C1(1)		**Access level:** 3
	Data type: Unsigned32	**Data set:** -	**Function diagram:** -
	P-Group: Topology	**Units group:** -	**Unit selection:** -
	Min	**Max**	**Factory setting**
	0000 hex	FFFF FFFF hex	0000 hex

Description: If, when comparing the actual topology and target topology, only error has occurred, that can be acknowledged, then using this parameter, a new comparison can be started - acknowledging the error in the target topology.

Differences that can be acknowledged:

- topology comparison, component shifted
- topology comparison, serial number of a component has been detected to be different (byte 3 = 1)
- topology comparison shows one component that is connected differently

The following parameter values are available:

p9904 = 1 --> the procedure is started.

p9904 = 0 after starting --> the procedure has been successfully completed.

p9904 = 1 after starting --> the procedure has not been successfully completed.

The possible causes for an unsuccessful procedure are located in bytes 4, 3, 2.

Byte 2:

Number of structural differences.

Byte 3:

Number of differences that can be acknowledged (p9904).

Byte 4:

Number of differences. These differences can be resolved as follows:

- sets the topology comparison (p9906 or p9907/p9908).
- change over the actual topology.

The appropriate action should be selected corresponding to the message that is displayed/output.

Note: In order to permanently accept the acknowledgement of the fault that can be resolved, then it must be saved in a non-volatile fashion (p0977).

p9905 Device specialization / Device specializ.

CU_S	**Can be changed:** C1(1)		**Access level:** 3
	Data type: Unsigned16	**Data set:** -	**Function diagram:** -
	P-Group: Topology	**Units group:** -	**Unit selection:** -
	Min	**Max**	**Factory setting**
	0	1	0

Description: With p9905 = 1, the serial numbers and the hardware versions of all of the components are transferred from the actual topology into the target topology and a new comparison is started..

For the device specialization, the components of the target topology may only differ from those of the actual topology by the serial numbers.

Note: p9905 is automatically set to 0 at the end of the operation.

In order to permanently accept the data, it is necessary to save in a non-volatile fashion (p0977).

© Siemens AG, 2005. All rights reserved

p9906 Topology comparison, comparison stage of all components / Topo_cmpr tot comp

CU_S	**Can be changed:** C1(1)		**Access level:** 3
	Data type: Integer16	**Data set:** -	**Function diagram:** -
	P-Group: Topology	**Units group:** -	**Unit selection:** -
	Min	**Max**	**Factory setting**
	0	99	0

Description: Sets the type of comparison between the actual topology and target topology.
The comparison is started by setting the required value.

Values:
0: High: Compares the complete electronic rating plate
1: Average: Compares the component type and the Order number
2: Low: Compares the component type
3: Minimum: Compares the component class
99: Topology has different comparison stages

Note: The electronic rating plate comprises the following data:
- component type (e.g. "SMC20")
- Order No. (e.g. "6SL3055-0AA0-5BA0")
- manufacturer (e.g. SIEMENS)
- hardware version (e.g. "A")
- Serial No. (e.g. "T-P30050495")

When comparing the topology, the following data is compared in the target and actual topologies:
p9906 = 0: Component type, Order No., Hardware version, Manufacturer, Serial No.
p9906 = 1: Component type, Order No.
p9906 = 2: Component type
p9906 = 3: Component class (e.g. Sensor Module or Motor Module)

p9907 Topology comparison, comparison stage of the component number / Topo_cmpr comp_no

CU_S	**Can be changed:** C1(1)		**Access level:** 3
	Data type: Unsigned8	**Data set:** -	**Function diagram:** -
	P-Group: Topology	**Units group:** -	**Unit selection:** -
	Min	**Max**	**Factory setting**
	0	199	0

Description: Enters the number of the component where the setting of how the actual topology should be compared to the target topology should be changed.

Dependency: Refer to: p9908

p9908 Topology comparison, comparison stage of a component / Topo_cmpr 1 comp

CU_S	**Can be changed:** C1(1)		**Access level:** 3
	Data type: Integer16	**Data set:** -	**Function diagram:** -
	P-Group: Topology	**Units group:** -	**Unit selection:** -
	Min	**Max**	**Factory setting**
	0	99	0

Description: Sets the type of comparison of a component in the target topology with the actual topology.
The comparison is started by setting the required value.

Values:
0: High: Compares the complete electronic rating plate
1: Average: Compares the component type and the Order number
2: Low: Compares the component type
3: Minimum: Compares the component class
99: Topology has different comparison stages

Dependency: Refer to: p9907

© Siemens AG, 2005. All rights reserved

Note: The electronic rating plate comprises the following data:
- component type (e.g. "SMC20")
- Order No. (e.g. "6SL3055-0AA0-5BA0")
- manufacturer (e.g. SIEMENS)
- hardware version (e.g. "A")
- Serial No. (e.g. "T-P30050495")

When comparing the topology, the following data is compared in the target and actual topologies:
p9908 = 0: Component type, Order No., Hardware version, Manufacturer, Serial No.
p9908 = 1: Component type, Order No.
p9908 = 2: Component type
p9908 = 3: Component class (e.g. Sensor Module or Motor Module)

p9909 Topology comparison, component replacement / Topo_cmpr replace

CU_S

Can be changed: C1(1)		**Access level:** 3
Data type: Unsigned8	**Data set:** -	**Function diagram:** -
P-Group: Topology	**Units group:** -	**Unit selection:** -
Min	**Max**	**Factory setting**
0	1	1

Description: For p9909 = 1, the serial number and the hardware version of the new replaced component is automatically transferred from the actual topology into the target topology and then saved in a non-volatile fashion.
For the components that have been replaced, the electronic type plate must match as far as the following data is concerned:
- component type (e.g. "SMC20")
- Order No. (e.g. "6SL3055-0AA0-5BA0")

For p9909 = 0, serial numbers and hardware versions are not automatically transferred. In this case, the transfer must be made using p9904.

Dependency: Refer to: p9904, p9905

Note: The modified target topology is automatically saved in a non-volatile fashion when the drive object runs-up (e.g. after a POWER ON).
Special case for Control Unit and option slot modules:
When replacing these components, independent of p9909, the serial number and hardware version are automatically transferred and saved in a non-volatile fashion.

p9910 Transfer additional components into the target topology / Transfer comp

CU_S

Can be changed: C1(1)		**Access level:** 1
Data type: Integer16	**Data set:** -	**Function diagram:** -
P-Group: Topology	**Units group:** -	**Unit selection:** -
Min	**Max**	**Factory setting**
0	5	1

Description: Transfer additional inserted DRIVE-CLiQ components into the target topology and add the appropriate drive objects to the project.

Values:
0: No selection
1: Drive object type SERVO
2: Drive object type VECTOR
3: SINAMICS GM (DFEMV & VECTORMV)
4: SINAMICS SM (AFEMV & VECTORMV)
5: SINAMICS GL (VECTORGL)

© Siemens AG, 2005. All rights reserved

p9915 DRIVE-CLiQ data transfer error, shutdown threshold, master / DLQ fault master

CU_S	**Can be changed:** C1(1)		**Access level:** 4
	Data type: Unsigned32	**Data set:** -	**Function diagram:** -
	P-Group: Topology	**Units group:** -	**Unit selection:** -
	Min	**Max**	**Factory setting**
	0000 hex	0007 07FF hex	0007 02FF hex

Description: Only for internal Siemens service.

p9916 DRIVE-CLiQ data transfer error, shutdown threshold, slave / DLQ fault slave

CU_S	**Can be changed:** C1(1)		**Access level:** 4
	Data type: Unsigned32	**Data set:** -	**Function diagram:** -
	P-Group: Topology	**Units group:** -	**Unit selection:** -
	Min	**Max**	**Factory setting**
	0000 hex	0007 07FF hex	0007 02FF hex

Description: Only for internal Siemens service.

p9920[0...19] Licensing, enter license key / Enter license key

CU_S	**Can be changed:** U, T		**Access level:** 2
	Data type: Unsigned8	**Data set:** -	**Function diagram:** -
	P-Group: -	**Units group:** -	**Unit selection:** -
	Min	**Max**	**Factory setting**
	0	255	0

Description: Enters the license key for this drive unit.
Example of the license key:
EACZ-QBCA = 69 65 67 90 45 81 66 67 65 dec (ASCII characters)
Index 0 = license key character 1 (e.g. 69 dec)
Index 1 = license key character 2 (e.g. 65 dec)
...
Index 19 = license key character 20 (e.g. 0 dec)

Dependency: Refer to: r7843, p9921
Refer to: A13000, A13001

Note: When changing p9920[x] to the value 0, all of the following indices are also set to 0.
After entering the license key, the license key must be activated (p9921).
If the licensing is not adequate, then the following alarm is displayed together with LED:
- A13000 --> licensing not sufficient
- LED READY --> flashes green/red with 0.5 Hz

p9921 Licensing, activate license key / Act. license key

CU_S	**Can be changed:** U, T		**Access level:** 2
	Data type: Integer16	**Data set:** -	**Function diagram:** -
	P-Group: -	**Units group:** -	**Unit selection:** -
	Min	**Max**	**Factory setting**
	0	1	0

Description: Activates the entered license key.
The following is executed when activating the license key.
- the checksum of the entered license key is checked.
- the entered license key is saved in the a non-volatile fashion on the CompactFlash card.
- re-enter the license key.

Values:
0: not active
1: Activate start license key

© Siemens AG, 2005. All rights reserved

Dependency: Refer to: p9920
Refer to: A13000, A13001
Note: When the license key has been activated, p9921 is automatically set to 0.

r9925[0...99] CompactFlash card file error / CF file error

CU_S

Can be changed: -		**Access level:** 2
Data type: Unsigned8	**Data set:** -	**Function diagram:** -
P-Group: -	**Units group:** -	**Unit selection:** -
Min	**Max**	**Factory setting**
-	-	-

Description: Displays the directory and the name of the file that was identified as illegal with respect to the state when supplied from the factory when checking the CompactFlash card.
Dependency: Refer to: A01016

r9926 CompactFlash card check status / CF check status

CU_S

Can be changed: -		**Access level:** 2
Data type: Unsigned8	**Data set:** -	**Function diagram:** -
P-Group: -	**Units group:** -	**Unit selection:** -
Min	**Max**	**Factory setting**
-	-	-

Description: Displays the status when checking the CompactFlash card after powering-up.
Dependency: Refer to: A01016

p9930[0...8] System logbook activation / SYSLOG activation

CU_S

Can be changed: U, T		**Access level:** 3
Data type: Unsigned8	**Data set:** -	**Function diagram:** -
P-Group: -	**Units group:** -	**Unit selection:** -
Min	**Max**	**Factory setting**
0	255	0

Description: Only for service purposes.
Index: [0] = System logbook stage (0: not active)
[1] = COM2/COM1 (0: COM2, 1: COM1)
[2] = Activate file write (0: not active)
[3] = Display time stamp (0: No display)
[4] = Display system logbook stage (0: No display)
[5] = Display drive object number (0: No display)
[6] = Display software module name (0: No display)
[7] = Output buffer size (stages, each 1 kB)
[8] = System logbook file size (stages, each 10 kB)
Notice: Before powering-down the Control Unit, ensure that the system logbook is switched-out (p9930[0] = 0).

p9931[0...99] System logbook module selection / SYSLOG mod select.

CU_S

Can be changed: U, T		**Access level:** 3
Data type: Unsigned32	**Data set:** -	**Function diagram:** -
P-Group: -	**Units group:** -	**Unit selection:** -
Min	**Max**	**Factory setting**
0000 hex	FFFF FFFF hex	0000 hex

Description: Only for service purposes.

© Siemens AG, 2005. All rights reserved

p9932 Save system logbook EEPROM / SYSLOG EEPROM save

CU_S	**Can be changed:** U, T		**Access level:** 3
	Data type: Unsigned8	**Data set:** -	**Function diagram:** -
	P-Group: -	**Units group:** -	**Unit selection:** -
	Min	**Max**	**Factory setting**
	0	255	0

Description: Only for service purposes.

p9950 Runtime measurement, control / Runtime_meas ctrl

CU_S	**Can be changed:** U, T		**Access level:** 4
	Data type: Integer16	**Data set:** -	**Function diagram:** -
	P-Group: -	**Units group:** -	**Unit selection:** -
	Min	**Max**	**Factory setting**
	0	3	0

Description: Setting to control the runtime measurement.

Values:
0: Stop runtime measurement
1: Start runtime meas (internal)
2: Clear trace buffer (internal)
3: Activate calculation of remaining computing time

Dependency: Refer to: r9976

r9976[0...7] System load / System load

CU_S	**Can be changed:** -		**Access level:** 3
	Data type: Floating Point	**Data set:** -	**Function diagram:** -
	P-Group: -	**Units group:** PERCENT	**Unit selection:** -
	Min	**Max**	**Factory setting**
	- [%]	- [%]	- [%]

Description: Displays the system load.

The system load measurement is automatically started after run-up.

The individual values (computation load and cyclic load) are measured over short time slices and from the measurements, the maximum, the minimum and the average value are formed and displayed in the appropriate indices. Further, the degree of memory utilization of the data and program memory is displayed.

Index:
[0] = comp. time load (min)
[1] = Computation time load (averaged)
[2] = Computation time load (max)
[3] = Computation time load cyclic (min)
[4] = Computation time load cyclic (avg)
[5] = Computation time load cyclic (max)
[6] = Data memory locked
[7] = Program memory locked

Dependency: Refer to: p9950
Refer to: A01053

© Siemens AG, 2005. All rights reserved

1.3 Parameters for data sets

1.3.1 Parameters for command data sets (CDS)

Note:

References: /IH1/ SINAMICS S120 Installation and Start-Up Manual "Data sets" section

The following list contains the command-data-set-dependent parameters.

Product: SINAMICS S, Version: 2302000, Label: ., Language: eng

p0700[0...n] Macro binector input (BI) / Macro BI
p0820[0...n] BI: Drive data set selection DDS bit 0 / DDS select., bit 0
p0821[0...n] BI: Drive data set selection DDS bit 1 / DDS select., bit 1
p0822[0...n] BI: Drive data set selection DDS bit 2 / DDS select., bit 2
p0823[0...n] BI: Drive data set selection DDS bit 3 / DDS select., bit 3
p0824[0...n] BI: Drive data set selection DDS bit 4 / DDS select., bit 4
p0828[0...n] BI: Motor changeover, feedback signal / Mot_chng fdbk sig
p0840[0...n] BI: ON/OFF1 / ON/OFF1
p0844[0...n] BI: 1. OFF2 / 1. OFF2
p0845[0...n] BI: 2. OFF2 / 2. OFF2
p0848[0...n] BI: 1. OFF3 / 1. OFF3
p0849[0...n] BI: 2. OFF3 / 2. OFF3
p0852[0...n] BI: Enable operation / Enable operation
p0854[0...n] BI: Master ctrl by PLC / Master ctrl by PLC
p0855[0...n] BI: Unconditionally release holding brake / Uncond open brake
p0856[0...n] BI: Enable speed controller / Enable n_ctrl
p0858[0...n] BI: Unconditionally close holding brake / Uncond close brake
p1000[0...n] Macro Connector Inputs (CI) for speed setpoints / Macro CI n_set
p1000[0...n] Macro Connector Inputs (CI) for velocity setpoints / Macro CI n_set
p1020[0...n] BI: Fixed speed setpoint selection Bit 0 / n_set_fixed Bit 0
p1020[0...n] BI: Fixed velocity setpoint selection Bit 0 / n_set_fixed Bit 0
p1021[0...n] BI: Fixed speed setpoint selection Bit 1 / n_set_fixed Bit 1
p1021[0...n] BI: Fixed velocity setpoint selection Bit 1 / n_set_fixed Bit 1
p1022[0...n] BI: Fixed speed setpoint selection Bit 2 / n_set_fixed Bit 2
p1022[0...n] BI: Fixed velocity setpoint selection Bit 2 / n_set_fixed Bit 2
p1023[0...n] BI: Fixed speed setpoint selection Bit 3 / n_set_fixed Bit 3
p1023[0...n] BI: Fixed velocity setpoint selection Bit 3 / n_set_fixed Bit 3
p1035[0...n] BI: Motorized potentiometer, setpoint, raise / Mop raise
p1036[0...n] BI: Motorized potentiometer, lower setpoint / Mop lower
p1039[0...n] BI: Motorized potentiometer, inversion / Mop inversion
p1041[0...n] BI: Motorized potentiometer, manual/automatic / Mop manual/auto
p1042[0...n] CI: Motorized potentiometer, automatic setpoint / Mop auto setpoint
p1043[0...n] BI: Motorized potentiometer, accept setpoint / Mop accept set val
p1044[0...n] CI: Motorized potentiometer, setting value / Mop setting value
p1055[0...n] BI: Jog bit 0 / Jog bit 0
p1056[0...n] BI: Jog bit 1 / Jog bit 1
p1070[0...n] CI: Main setpoint / Main setpoint
p1071[0...n] CI: Main setpoint scaling / Main setpt scal

© Siemens AG, 2005. All rights reserved

p1075[0...n] CI: Suppl setpoint / Suppl setpoint
p1076[0...n] CI: Supplementary setpoint scaling / Suppl setpt scal
p1085[0...n] CI: Speed limit in positive direction of rotation / n_limit pos
p1085[0...n] CI: Velocity limit, positive direction / n_limit pos
p1088[0...n] CI: Speed limit negative direction of rotation / n_limit neg
p1088[0...n] CI: Velocity limit, negative direction / n_limit neg
p1110[0...n] BI: Inhibit negative direction / Inhib neg dir rot
p1111[0...n] BI: Inhibit positive direction / Inhib pos dir rot
p1113[0...n] BI: Direction reversal / Direction reversal
p1122[0...n] BI: Bypass ramp-function generator / Bypass RFG
p1140[0...n] BI: Enables the ramp-function generator / Enable RFG
p1141[0...n] BI: Start ramp-function generator / Start RFG
p1142[0...n] BI: Enable speed setpoint / Enable n_set
p1143[0...n] BI: Ramp-function generator, accept setting value / Accept RFG set val
p1144[0...n] CI: Ramp-function generator setting value / RFG setting value
p1155[0...n] CI: Speed controller speed setpoint 1 / n_ctrl n_set 1
p1155[0...n] CI: Velocity controller, velocity setpoint 1 / n_ctrl n_set 1
p1160[0...n] CI: Speed controller speed setpoint 2 / n_ctrl n_set 2
p1160[0...n] CI: Velocity controller, velocity setpoint 2 / n_ctrl n_set 2
p1330[0...n] CI: V/Hz control independent voltage setpoint / Uf U_set independ.
p1356[0...n] CI: V/f control, angular setpoint / Uf ang setpoint
p1430[0...n] CI: Speed pre-control / n_pre-control
p1430[0...n] CI: Velocity pre-control / n_pre-control
p1437[0...n] CI: Speed controller, reference model I component input / n_ctrRefMod I_comp
p1455[0...n] CI: Speed controller P gain adaptation signal / n_ctrl Adpt_sig Kp
p1455[0...n] CI: Velocity controller, P gain adaptation signal / n_ctrl Adpt_sig Kp
p1466[0...n] CI: Speed controller P-gain scaling / n_ctrl Kp Scal
p1466[0...n] CI: Velocity controller P gain scaling / n_ctrl Kp Scal
p1476[0...n] BI: Speed controller hold integrator / n_ctrl integ stop
p1476[0...n] BI: Velocity controller, hold integrator / n_ctrl integ stop
p1477[0...n] BI: Speed controller set integrator value / n_ctrl integ set
p1477[0...n] BI: Set velocity controller integrator value / n_ctrl integ set
p1478[0...n] CI: Speed controller integrator setting value / n_ctr integ_setVal
p1478[0...n] CI: Velocity controller, integrator value / n_ctr integ_setVal
p1479[0...n] CI: Speed controller integrator setting value scaling / n_ctrl I_val scal
p1492[0...n] BI: Droop feedback enable / Enables droop
p1495[0...n] CI: Acceleration pre-controlling, speed change each 1 s / a_prectrl dn/1s
p1500[0...n] Macro Connector Inputs (CI) for torque setpoints / Macro CI M_set
p1500[0...n] Macro Connector Inputs (CI) for force setpoints / Macro CI M_set
p1501[0...n] BI: Change over between closed-loop speed/torque control / Changeov n/M_ctrl
p1501[0...n] BI: Changeover velocity/force control / Changeov n/M_ctrl
p1503[0...n] CI: Torque setpoint / M_set
p1511[0...n] CI: Supplementary torque 1 / M_suppl 1
p1511[0...n] CI: Supplementary force 1 / M_suppl 1
p1512[0...n] CI: Supplementary torque 1 scaling / M_suppl 1 scal
p1512[0...n] CI: Supplementary force 1 scaling / M_suppl 1 scal
p1513[0...n] CI: Supplementary torque 2 / M_suppl 2
p1513[0...n] CI: Supplementary force 2 / M_suppl 2
p1522[0...n] CI: Torque limit, upper/motoring / M_max upper/mot
p1523[0...n] CI: Torque limit, lower/regenerative / M_max lower/regen
p1528[0...n] CI: Torque limit, upper/motoring, scaling / M_max up/mot scal
p1528[0...n] CI: Torque limit upper scaling / M_max upper scal
p1529[0...n] CI: Torque limit, lower/regenerating scaling / M_max low/gen scal

© Siemens AG, 2005. All rights reserved

p1529[0...n] CI: Torque limit lower scaling / M_max lower scal
p1540[0...n] CI: Torque limit upper scaling / M_max upper scal
p1541[0...n] CI: Torque limit lower scaling / M_max lower scal
p1542[0...n] CI: Travel to a fixed endstop, torque reduction / TfS M_red
p1545[0...n] BI: Activates travel to a fixed endstop / TfS activation
p1550[0...n] BI: Accept the actual torque as torque offset / Accept act. torque
p1569[0...n] CI: Friction characteristic, input control / Frict input ctrl
p2103[0...n] BI: 1. Acknowledge faults / 1. Acknowledge
p2104[0...n] BI: 2. Acknowledge faults / 2. Acknowledge
p2105[0...n] BI: 3. Acknowledge faults / 3. Acknowledge
p2106[0...n] BI: External fault 1 / External fault 1
p2107[0...n] BI: External fault 2 / External fault 2
p2108[0...n] BI: External fault 3 / External fault 3
p2112[0...n] BI: External alarm 1 / External alarm 1
p2116[0...n] BI: External alarm 2 / External alarm 2
p2117[0...n] BI: External alarm 3 / External alarm 3
p2148[0...n] BI: Ramp-function generator active / HLG active
p2151[0...n] CI: Speed setpoint for messages/signals / n_set for msg
p2154[0...n] CI: Speed setpoint 2 / n_set 2
p2200[0...n] BI: Technology controller enable / Tec_ctr enable
p2220[0...n] BI: Technology controller fixed value selection bit 0 / Tec_ctr sel bit 0
p2221[0...n] BI: Technology controller fixed value selection bit 1 / Tec_ctr sel bit 1
p2222[0...n] BI: Technology controller fixed value selection bit 2 / Tec_ctr sel bit 2
p2223[0...n] BI: Technology controller fixed value selection bit 3 / Tec_ctr sel bit 3
p2235[0...n] BI: Technology controller motorized potentiometer, raise setpoint / Tec_ctr mop raise
p2236[0...n] BI: Technology controller motorized potentiometer, lower setpoint / Tec_ctr mop lower
p2253[0...n] CI: Technology controller setpoint 1 / Tec_ctr setpoint 1
p2254[0...n] CI: Technology controller setpoint 2 / Tec_ctr setpoint 2
p2264[0...n] CI: Technology controller actual value / Tec_ctr act val
p2289[0...n] CI: Technology controller pre-control signal / Tec_ctr prectrl
p2296[0...n] CI: Technology controller output scaling / Tec_ctr outp scal
p2297[0...n] CI: Technology controller maximum limiting / Tec_ctr max_limit
p2298[0...n] CI: Technology controller minimum limiting / Tec_ctr min_lim
p3111[0...n] BI: External fault 3, enable / Ext fault 3 enab
p3112[0...n] BI: External fault 3 enable negated / Ext flt 3 enab neg

© Siemens AG, 2005. All rights reserved

1.3.2 Parameters for drive data sets (DDS)

Note:

References: /IH1/ SINAMICS S120 Installation and Start-Up Manual "Data sets" section

The following list contains the drive-data-set-dependent parameters.

Product: SINAMICS S, Version: 2302000, Label: ., Language: eng

p0186[0...n] Motor Data Sets (MDS) number / MDS number
p0187[0...n] Encoder 1 encoder data set number / Enc 1 EDS number
p0188[0...n] Encoder 2 encoder data set number / Enc 2 EDS number
p0189[0...n] Encoder 3 encoder data set number / Enc 3 EDS number
p0340[0...n] Automatic calculation of motor/control parameters / Calc auto par
p0578[0...n] Calculate parameters that are dependent on the technology/units / Calc techn par
p0640[0...n] Current limit / Current limit
p1001[0...n] CO: Fixed speed setpoint 1 / n_set_fixed 1
p1001[0...n] CO: Fixed velocity setpoint 1 / n_set_fixed 1
p1002[0...n] CO: Fixed speed setpoint 2 / n_set_fixed 2
p1002[0...n] CO: Fixed velocity setpoint 2 / n_set_fixed 2
p1003[0...n] CO: Fixed speed setpoint 3 / n_set_fixed 3
p1003[0...n] CO: Fixed velocity setpoint 3 / n_set_fixed 3
p1004[0...n] CO: Fixed speed setpoint 4 / n_set_fixed 4
p1004[0...n] CO: Fixed velocity setpoint 4 / n_set_fixed 4
p1005[0...n] CO: Fixed speed setpoint 5 / n_set_fixed 5
p1005[0...n] CO: Fixed velocity setpoint 5 / n_set_fixed 5
p1006[0...n] CO: Fixed speed setpoint 6 / n_set_fixed 6
p1006[0...n] CO: Fixed velocity setpoint 6 / n_set_fixed 6
p1007[0...n] CO: Fixed speed setpoint 7 / n_set_fixed 7
p1007[0...n] CO: Fixed velocity setpoint 7 / n_set_fixed 7
p1008[0...n] CO: Fixed speed setpoint 8 / n_set_fixed 8
p1008[0...n] CO: Fixed velocity setpoint 8 / n_set_fixed 8
p1009[0...n] CO: Fixed speed setpoint 9 / n_set_fixed 9
p1009[0...n] CO: Fixed velocity setpoint 9 / n_set_fixed 9
p1010[0...n] CO: Fixed speed setpoint 10 / n_set_fixed 10
p1010[0...n] CO: Fixed velocity setpoint 10 / n_set_fixed 10
p1011[0...n] CO: Fixed speed setpoint 11 / n_set_fixed 11
p1011[0...n] CO: Fixed velocity setpoint 11 / n_set_fixed 11
p1012[0...n] CO: Fixed speed setpoint 12 / n_set_fixed 12
p1012[0...n] CO: Fixed velocity setpoint 12 / n_set_fixed 12
p1013[0...n] CO: Fixed speed setpoint 13 / n_set_fixed 13
p1013[0...n] CO: Fixed velocity setpoint 13 / n_set_fixed 13
p1014[0...n] CO: Fixed speed setpoint 14 / n_set_fixed 14
p1014[0...n] CO: Fixed velocity setpoint 14 / n_set_fixed 14
p1015[0...n] CO: Fixed speed setpoint 15 / n_set_fixed 15
p1015[0...n] CO: Fixed velocity setpoint 15 / n_set_fixed 15
p1030[0...n] Motorized potentiometer, configuration / Mop configuration
p1037[0...n] Motorized potentiometer, maximum speed / Mop n_max
p1037[0...n] Motorized potentiometer, maximum velocity / Mop n_max
p1038[0...n] Motorized potentiometer, minimum speed / Mop n_min
p1038[0...n] Motorized potentiometer, minimum velocity / Mop n_min

© Siemens AG, 2005. All rights reserved

p1040[0...n] Motorized potentiometer, starting value / Mop start value
p1040[0...n] Motorized potentiometer, starting value / Mop start value
p1047[0...n] Motorized potentiometer, ramp-up time / Mop ramp-up time
p1048[0...n] Motorized potentiometer, ramp-down time / Mop ramp-down time
p1058[0...n] Jog 1 speed setpoint / Jog 1 n_set
p1058[0...n] Jog 1 velocity setpoint / Jog 1 n_set
p1059[0...n] Jog 2 speed setpoint / Jog 2 n_set
p1059[0...n] Jog 2 velocity setpoint / Jog 2 n_set
p1063[0...n] Speed limit, setpoint channel / n_limit setp.
p1063[0...n] Velocity limit, setpoint channel / v_limit setp.
p1080[0...n] Minimum speed / Minimum speed
p1080[0...n] Minimum velocity / Minimum speed
p1082[0...n] Maximum speed / Maximum speed
p1082[0...n] Maximum velocity / Maximum speed
p1083[0...n] CO: Speed limit in positive direction of rotation / n_limit pos
p1083[0...n] CO: Velocity limit, positive direction / n_limit pos
p1086[0...n] CO: Speed limit negative direction of rotation / n_limit neg
p1086[0...n] CO: Velocity limit, negative direction / n_limit neg
p1091[0...n] Skip speed 1 / Skip speed 1
p1091[0...n] Skip velocity 1 / Skip speed 1
p1092[0...n] Skip speed 2 / Skip speed 2
p1092[0...n] Skip velocity 2 / Skip speed 2
p1093[0...n] Skip speed 3 / Skip speed 3
p1093[0...n] Skip velocity 3 / Skip speed 3
p1094[0...n] Skip speed 4 / Skip speed 4
p1094[0...n] Skip velocity 4 / Skip speed 4
p1101[0...n] Skip speed bandwidth / Skip_n bandwidth
p1101[0...n] Skip velocity bandwidth / Skip_n bandwidth
p1120[0...n] Ramp-function generator ramp-up time / RFG ramp-up time
p1121[0...n] Ramp-function generator ramp-down time / RFG ramp-down time
p1130[0...n] Ramp-function generator initial rounding-off time / RFG t_start_round
p1131[0...n] Ramp-function generator final rounding-off time / RFG t_end_delay
p1134[0...n] Ramp-function generator rounding-off type / RFG round-off type
p1135[0...n] OFF3 ramp-down time / RFG OFF3 t_ramp-dn
p1136[0...n] OFF3 initial rounding-off time / RFGOFF3 t_strt_rnd
p1137[0...n] OFF3 final rounding-off time / RFG OFF3 t_end_del
p1145[0...n] Ramp-function generator tracking intensity. / RFG track intens
p1148[0...n] Ramp-function gen., tolerance for ramp-up and ramp-down active / RFG tol HL/RL act
p1148[0...n] Ramp-function gen., tolerance for ramp-up and ramp-down active / RFG tol HL/RL act
p1189[0...n] Speed setpoint configuration / n_ctrl config
p1189[0...n] Velocity setpoint configuration / n_ctrl config
p1192[0...n] DSC enc selection / DSC enc selection
p1193[0...n] DSC encoder adaptation factor / DSC encodAdaptFact
p1200[0...n] FlyRest oper mode / FlyRest oper mode
p1202[0...n] FlyRest srch curr / FlyRest srch curr
p1203[0...n] Flying restart search rate factor / FlyRst v_Srch Fact
p1240[0...n] Vdc controller configuration / Vdc_ctrl config
p1243[0...n] Vdc_max controller dynamic factor / Vdc_max dyn_factor
p1245[0...n] Vdc_min controller switch-in level (kinetic buffering) / Vdc_min on_level
p1247[0...n] Vdc_min controller dynamic factor (kinetic buffering) / Vdc_min dyn_factor
p1250[0...n] Vdc controller proportional gain / Vdc_ctrl Kp
p1251[0...n] Vdc controller integral action time / Vdc_ctrl Tn
p1252[0...n] Vdc controller derivative-action time / Vdc_ctrl t_deriv.

© Siemens AG, 2005. All rights reserved

p1255[0...n] Vdc_min controller time threshold / Vdc_min t_thresh
p1256[0...n] Vdc_min controller response (kinetic buffering) / Vdc_min response
p1257[0...n] Vdc_min controller speed threshold / Vdc_min n_thresh
p1280[0...n] Vdc controller configuration (V/f) / Vdc_ctrl config
p1283[0...n] Vdc_max controller dynamic factor (V/f) / Vdc_max dyn_factor
p1285[0...n] Vdc_min controller switch-in level (kinetic buffering) (V/f) / Vdc_min on_level
p1287[0...n] Vdc_min controller dynamic factor (kinetic buffering) (V/f) / Vdc_min dyn_factor
p1290[0...n] Vdc controller proportional gain (V/f) / Vdc_ctrl Kp
p1291[0...n] Vdc controller integral action time (V/f) / Vdc_ctrl Tn
p1292[0...n] Vdc controller derivative-action time (V/f) / Vdc_ctrl t_deriv.
p1293[0...n] Vdc controller output limit (V/f) / Vdc_ctrl outp_lim
p1295[0...n] Vdc_min controller time threshold (V/f) / Vdc_min t_thresh
p1296[0...n] Vdc_min controller response (kinetic buffering) (V/f / Vdc_min response
p1297[0...n] Vdc_min controller speed threshold (V/f) / Vdc_min n_thresh
p1300[0...n] Open-loop/closed-loop control operating mode / Control mode
p1300[0...n] Open-loop/closed-loop control operating mode / Control mode
p1310[0...n] Voltage boost permanent / U_boost perm
p1311[0...n] Voltage boost at acceleration / U_boost accelerate
p1317[0...n] V/f control diagnostics activation / Uf diagn act
p1318[0...n] V/f control ramp-up/ramp-down time / Uf t_rmp-up_rmp-dn
p1319[0...n] V/f control voltage at zero frequency / Uf U at f=0 Hz
p1320[0...n] V/f control programmable characteristic frequency 1 / Uf char f1
p1321[0...n] V/f control programmable characteristic voltage 1 / Uf char U1
p1322[0...n] V/f control programmable characteristic frequency 2 / Uf char f2
p1323[0...n] V/f control programmable characteristic voltage 2 / Uf char U2
p1324[0...n] V/f control programmable characteristic frequency 3 / Uf char f3
p1325[0...n] V/f control programmable characteristic voltage 3 / Uf char U3
p1326[0...n] V/f control programmable characteristic frequency 4 / Uf char f4
p1327[0...n] V/f control programmable characteristic voltage 4 / Uf char U4
p1335[0...n] Slip compensation, scaling / Slip comp scal
p1336[0...n] Slip compensation limit value / Slip comp lim val
p1338[0...n] V/f mode resonance damping gain / Uf Res_damp gain
p1339[0...n] V/f mode resonance damping filter time constant / Uf Res_damp T
p1340[0...n] I_max frequency controller proportional gain / I_max_ctrl Kp
p1341[0...n] I_max frequency controller integral action time / I_max_ctrl Tn
p1345[0...n] I_max voltage controller proportional gain / I_max_U_ctrl Kp
p1346[0...n] I_max voltage controller integral action time / I_max_U_ctrl Tn
p1350[0...n] Soft starting / Soft starting
p1358[0...n] Angular difference, balancing, actual angle / Bal act angle
p1400[0...n] Speed control configuration / n_ctrl config
p1400[0...n] Velocity control, configuration / n_ctrl config
p1400[0...n] Speed control configuration / n_ctrl config
p1401[0...n] Flux control configuration / F_ctrl config
p1402[0...n] Closed-loop current control and motor model configuration / I_ctrl config
p1402[0...n] Closed-loop current control and motor model configuration / I_ctrl config
p1404[0...n] Sensorless operation changeover speed / Sensorl op n_chgov
p1404[0...n] Sensorless operation changeover velocity / Sensorl op n_chgov
p1412[0...n] Speed setpoint filter, deadtime / n_set deadtime
p1414[0...n] Speed setpoint filter activation / n_set_filt active
p1414[0...n] Velocity setpoint filter activation / n_set_filt active
p1414[0...n] Speed setpoint filter activation / n_set_filt active
p1415[0...n] Speed setpoint filter 1 type / n_set_filt 1 typ
p1415[0...n] Velocity setpoint filter 1 type / n_set_filt 1 typ

© Siemens AG, 2005. All rights reserved

p1416[0...n] Speed setpoint filter 1 time constant / n_set_filt 1 T
p1416[0...n] Velocity setpoint filter 1 time constant / n_set_filt 1 T
p1417[0...n] Speed setpoint filter 1 denominator natural frequency / n_set_filt 1 fn_n
p1417[0...n] Velocity setpoint filter 1 denominator natural frequency / n_set_filt 1 fn_n
p1417[0...n] Speed setpoint filter 1 denominator natural frequency / n_set_filt 1 fn_n
p1418[0...n] Speed setpoint filter 1 denominator damping / n_set_filt 1 D_n
p1418[0...n] Velocity setpoint filter 1 denominator damping / n_set_filt 1 D_n
p1418[0...n] Speed setpoint filter 1 denominator damping / n_set_filt 1 D_n
p1419[0...n] Speed setpoint filter 1 numerator natural frequency / n_set_filt 1 fn_z
p1419[0...n] Velocity setpoint filter 1 numerator natural frequency / n_set_filt 1 fn_z
p1420[0...n] Speed setpoint filter 1 numerator damping / n_set_filt 1 D_z
p1420[0...n] Velocity setpoint filter 1 numerator damping / n_set_filt 1 D_z
p1421[0...n] Speed setpoint filter 2 type / n_set_filt 2 typ
p1421[0...n] Velocity setpoint filter 2 type / n_set_filt 2 typ
p1422[0...n] Speed setpoint filter 2 time constant / n_set_filt 2 T
p1422[0...n] Velocity setpoint filter 2 time constant / n_set_filt 2 T
p1423[0...n] Speed setpoint filter 2 denominator natural frequency / n_set_filt 2 fn_n
p1423[0...n] Velocity setpoint filter 2 denominator natural frequency / n_set_filt 2 fn_n
p1424[0...n] Speed setpoint filter 2 denominator damping / n_set_filt 2 D_n
p1424[0...n] Velocity setpoint filter 2 denominator damping / n_set_filt 2 D_n
p1425[0...n] Speed setpoint filter 2 numerator natural frequency / n_set_filt 2 fn_z
p1425[0...n] Velocity setpoint filter 2 numerator natural frequency / n_set_filt 2 fn_z
p1426[0...n] Speed setpoint filter 2 numerator damping / n_set_filt 2 D_z
p1426[0...n] Velocity setpoint filter 2 numerator damping / n_set_filt 2 D_z
p1428[0...n] Speed pre-control balancing deadtime / n_pre bal t_dead
p1428[0...n] Velocity pre-control balancing deadtime / n_pre bal t_dead
p1429[0...n] Speed pre-control balancing time constant / n_prectrl bal T
p1429[0...n] Velocity pre-control balancing time constant / n_prectrl bal T
p1433[0...n] Speed controller reference model natural frequency / n_ctrl RefMod fn
p1433[0...n] Velocity controller reference model natural frequency / n_ctrl RefMod fn
p1434[0...n] Speed controller reference model damping / n_ctrl RefMod D
p1434[0...n] Velocity controller reference model damping / n_ctrl RefMod D
p1435[0...n] Speed controller reference model deadtime / n_ctrRefMod t_dead
p1435[0...n] Velocity controller reference model deadtime / n_ctrRefMod t_dead
p1441[0...n] Actual speed smoothing time / n_act T_smooth
p1441[0...n] Actual velocity, smoothing time / n_act T_smooth
p1442[0...n] Actual speed smoothing time / n_act T_smooth
p1452[0...n] Speed actual value smoothing time (SLVC) / n_act T_smoothSLVC
p1456[0...n] Speed controller P gain adaptation lower starting point / n_ctrl AdaptKpLow.
p1456[0...n] Velocity controller P gain adaptation, lower starting point / n_ctrl AdaptKpLow.
p1457[0...n] Speed controller P gain adaptation upper starting point / n_ctrl AdaptKp up.
p1457[0...n] Velocity controller P gain adaptation upper starting point / n_ctrl AdaptKp up.
p1458[0...n] Adaptation factor, lower / Adapt_factor lower
p1459[0...n] Adaptation factor, upper / Adapt_factor upper
p1460[0...n] Speed controller P gain adaptation speed, lower / n_ctrl Kp n lower
p1460[0...n] Velocity controller, P gain adaptation velocity, lower / n_ctrl Kp n lower
p1460[0...n] Speed controller P gain adaptation speed, lower / n_ctrl Kp n lower
p1461[0...n] Speed controller P gain adaptation speed, upper / n_ctrl Kp n upper
p1461[0...n] Velocity controller, P gain adaptation velocity, upper / n_ctrl Kp n upper
p1462[0...n] Speed controller integral action time adaptation speed, lower / n_ctrl Tn n lower
p1462[0...n] Velocity contr., integral act. time adaptation velocity, lower / n_ctrl Tn n lower
p1463[0...n] Speed controller integral action time adaptation speed, upper / n_ctrl Tn n upper
p1463[0...n] Velocity contr., integral act. time adaptation velocity, upper / n_ctrl Tn n upper

© Siemens AG, 2005. All rights reserved

p1464[0...n] Speed controller adaptation speed, lower / n_ctrl n lower
p1464[0...n] Velocity controller adaptation velocity, lower / n_ctrl n lower
p1465[0...n] Speed controller adaptation speed, upper / n_ctrl n upper
p1465[0...n] Velocity controller adaptation velocity, upper / n_ctrl n upper
p1470[0...n] Speed controller sensorless operation P-gain / n_ctrl SLVC Kp
p1470[0...n] Velocity controller sensorless operation P-gain / n_ctrl SLVC Kp
p1470[0...n] Speed controller sensorless operation P-gain / n_ctrl SLVC Kp
p1472[0...n] Speed controller sensorless operation integral action time / n_ctrl SLVC Tn
p1472[0...n] Velocity controller sensorless operation integral action time / n_ctrl SLVC Tn
p1488[0...n] Droop input source / Droop input,source
p1489[0...n] Droop feedback scaling / Droop scaling
p1494[0...n] Speed controller integrator feedback time constant / n_ctr integ_fdbk T
p1494[0...n] Velocity controller integrator feedback time constant / n_ctr integ_fdbk T
p1496[0...n] Acceleration pre-control scaling / a_before scaling
p1498[0...n] Load moment of inertia / Load mom of inert
p1498[0...n] Load mass / Load mom of inert
p1499[0...n] Accelerating for torque control, scaling / a for M_ctrl scal
p1514[0...n] Supplementary torque 2 scaling / M_suppl 2 scal
p1517[0...n] Accelerating torque smoothing time constant / M_accel T_smooth
p1517[0...n] Acceleration force smoothing time constant / M_accel T_smooth
p1520[0...n] CO: Torque limit, upper/motoring / M_max upper/mot
p1520[0...n] CO: Force limit upper/motoring / M_max upper/mot
p1521[0...n] CO: Torque limit, lower/regenerative / M_max lower/regen
p1521[0...n] CO: Force limit, lower/regenerative / M_max lower/regen
p1524[0...n] CO: Torque limit, upper/motoring, scaling / M_max up/mot scal
p1525[0...n] CO: Torque limit, lower/regenerating scaling / M_max low/gen scal
p1530[0...n] Power limit, motoring / P_max mot
p1531[0...n] Power limit, regenerating / P_max gen
p1532[0...n] CO: Torque limit, offset / M_max offset
p1532[0...n] CO: Force offset, force limit / M_max offset
p1570[0...n] CO: Flux setpoint / Flux setpoint
p1574[0...n] Voltage reserve dynamic / U_reserve dyn
p1580[0...n] Efficiency optimization / Efficiency opt.
p1582[0...n] Flux setpoint smoothing time / Flux setp T_smth
p1584[0...n] Flux setpoint smoothing time for field-weakening operation / Flx setp T_smth Fs
p1590[0...n] Flux controller P gain / Flux controller Kp
p1592[0...n] Flux controller integral.action time / Flux controller Tn
p1596[0...n] Field weakening controller integral-action time / Field_ctrl Tn
p1610[0...n] Torque setpoint static (SLVC) / M_set static
p1611[0...n] Supplementary accelerating torque (SLVC) / M_suppl_accel
p1612[0...n] Current setpoint, open-loop control, sensorless / I_setCtrSensorless
p1616[0...n] Current setpoint smoothing time / I_set T_smooth
p1654[0...n] Current setpoint torque-generating smoothing time / Isq_set T_smooth
p1656[0...n] Activates current setpoint filter / I_set_filt active
p1656[0...n] Activates current setpoint filter / I_set_filt active
p1657[0...n] Current setpoint filter 1 type / I_set_filt 1 Typ
p1658[0...n] Current setpoint filter 1 denominator natural frequency / I_set_filt 1 fn_n
p1659[0...n] Current setpoint filter 1 denominator damping / I_set_filt 1 D_n
p1660[0...n] Current setpoint filter 1 numerator natural frequency / I_set_filt 1 fn_z
p1661[0...n] Current setpoint filter 1 numerator damping / I_set_filt 1 D_z
p1662[0...n] Current setpoint filter 2 type / I_set_filt 2 Typ
p1663[0...n] Current setpoint filter 2 denominator natural frequency / I_set_filt 2 fn_n
p1664[0...n] Current setpoint filter 2 denominator damping / I_set_filt 2 D_n

© Siemens AG, 2005. All rights reserved

p1665[0...n] Current setpoint filter 2 numerator natural frequency / I_set_filt 2 fn_z
p1666[0...n] Current setpoint filter 2 numerator damping / I_set_filt 2 D_z
p1667[0...n] Current setpoint filter 3 type / I_set_filt 3 Typ
p1668[0...n] Current setpoint filter 3 denominator natural frequency / I_set_filt 3 fn_n
p1669[0...n] Current setpoint filter 3 denominator damping / I_set_filt 3 D_n
p1670[0...n] Current setpoint filter 3 numerator natural frequency / I_set_filt 3 fn_z
p1671[0...n] Current setpoint filter 3 numerator damping / I_set_filt 3 D_z
p1672[0...n] Current setpoint filter 4 type / I_set_filt 4 Typ
p1673[0...n] Current setpoint filter 4 denominator natural frequency / I_set_filt 4 fn_n
p1674[0...n] Current setpoint filter 4 denominator damping / I_set_filt 4 D_n
p1675[0...n] Current setpoint filter 4 numerator natural frequency / I_set_filt 4 fn_n
p1676[0...n] Current setpoint filter 4 numerator damping / I_set_filt 4 D_z
p1701[0...n] Current controller reference model deadtime / I_ctrRefMod t_dead
p1703[0...n] Isq current controller pre-control scaling / Isq_ctr_prectrScal
p1715[0...n] Current controller P gain / I_ctrl Kp
p1715[0...n] Current controller P gain / I_ctrl Kp
p1717[0...n] Current controller integral-action time / I_ctrl Tn
p1726[0...n] Quadrature arm decoupling, scaling / Transv_decpl scal
p1727[0...n] Quadrature arm decoupling at voltage limit, scaling / TrnsvDecplVmaxScal
p1740[0...n] Gain resonance damping for sensorless closed loop control / Gain res_damp
p1744[0...n] Motor model speed threshold stall detection / MotMod n_thr stall
p1745[0...n] Motor model error threshold stall detection / MotMod ThreshStall
p1750[0...n] Motor model configuration / MotMod config
p1752[0...n] Motor model changeover speed operation with encoder / MotMod n_chgov enc
p1752[0...n] Motor model with encoder changeover velocity / MotMod n_chgov enc
p1755[0...n] Motor model changeover speed sensorless operation / MotMod n_chgSnsorl
p1755[0...n] Motor model changeover velocity sensorless operation / MotMod n_chgSnsorl
p1758[0...n] Motor model changeover delay time, closed/open-loop control / MotMod t cl_op
p1759[0...n] Motor model changeover delay time open/closed loop control / MotMod t op_cl
p1760[0...n] Motor model with encoder speed adaptation Kp / MotMod wE n_ada Kp
p1761[0...n] Motor model with encoder speed adaptation Tn / MotMod wE n_ada Tn
p1764[0...n] Motor model without encoder speed adaptation Kp / MotMod woE n_adaKp
p1767[0...n] Motor model without encoder speed adaptation Tn / MotMod woE n_adaTn
p1774[0...n] Motor model, offset voltage compensation / MotMod woE n_adaTn
p1775[0...n] Motor model, offset voltage compensation / MotMod woE n_adaTn
p1780[0...n] Motor model configuration adaptation / MotMod config adap
p1781[0...n] Motor model IM Rs adaptation integral action time / MotMod Rs Tn
p1783[0...n] Motor model IM Rs adaptation Kp / MotMod Rs Kp
p1785[0...n] Motor model IM Lh adaptation Kp / MotMod Lh Kp
p1786[0...n] Motor model IM Lh adaptation integral action time / MotMod Lh Tn
p1795[0...n] Motor model PESM kT adaptation integral action time / MotMod kT Tn
p1800[0...n] Pulse frequency / Pulse frequency
p1802[0...n] Modulator mode / Modulator mode
p1803[0...n] Maximum modulation depth / Modulat depth max
p1804[0...n] Filter time constant smoothed modulation index / T_filt mod_idxSmth
p1806[0...n] Filter time constant Vdc correction / T_filt Vdc_corr
p1840[0...n] Actual value correction, configuration / ActVal_corr config
p1845[0...n] Actual value correction evaluation factor Lsig / ActV_corr FactLsig
p1846[0...n] Actual value correction damping factor / ActV_corr D_factor
p1959[0...n] Rotating measurement configuration / Rot meas config
p2140[0...n] Hysteresis speed 2 / n_hysteresis 2
p2140[0...n] Hysteresis velocity 2 / n_hysteresis 2
p2141[0...n] Speed threshold 1 / n_thresh val 1

© Siemens AG, 2005. All rights reserved

p2141[0...n] Velocity threshold value 1 / n_thresh val 1
p2142[0...n] Hysteresis speed 1 / n_hysteresis 1
p2142[0...n] Hysteresis velocity 1 / n_hysteresis 1
p2149[0...n] Monitoring, configuration / Monit config
p2150[0...n] Hysteresis speed 3 / n_hysteresis 3
p2150[0...n] Hysteresis velocity 3 / n_hysteresis 3
p2153[0...n] Speed actual value filter time constant / n_act_filt T
p2155[0...n] Speed threshold 2 / n_thresh val 2
p2155[0...n] Velocity threshold value 2 / n_thresh val 2
p2156[0...n] On delay, comparison value reached / t_on cmpr val rchd
p2161[0...n] Speed threshold 3 / n_thresh val 3
p2161[0...n] Velocity threshold value 3 / n_thresh val 3
p2162[0...n] Hysteresis speed n_act > n_max / Hyst n_act>n_max
p2162[0...n] Hysteresis velocity n_act > n_max / Hyst n_act>n_max
p2163[0...n] Speed threshold 4 / n_thresh val 4
p2163[0...n] Velocity threshold value 4 / n_thresh val 4
p2164[0...n] Hysteresis speed 4 / n_hysteresis 4
p2164[0...n] Hysteresis velocity 4 / n_hysteresis 4
p2166[0...n] Off delay n_act = n_set / t_del_off n_i=n_so
p2167[0...n] Switch-on delay n_act = n_set / t_on n_act=n_set
p2174[0...n] Torque threshold value 1 / M_thresh val 1
p2174[0...n] Force threshold value 1 / M_thresh val 1
p2175[0...n] Motor locked speed threshold / Mot lock n_thresh
p2175[0...n] Motor locked, velocity threshold / Mot lock n_thresh
p2177[0...n] Motor locked delay time / Mot lock t_del
p2178[0...n] Motor stalled delay time / Mot stall t_del
p2181[0...n] Load monitoring, response / Load monit. resp.
p2182[0...n] Load monitoring, speed threshold value 1 / n_thresh 1
p2182[0...n] Load monitoring, velocity threshold 1 / n_thresh 1
p2183[0...n] Load monitoring, speed threshold value 2 / n_thresh 2
p2183[0...n] Load monitoring, velocity threshold 2 / n_thresh 2
p2184[0...n] Load monitoring, speed threshold value 3 / n_thresh 3
p2184[0...n] Load monitoring, velocity threshold 3 / n_thresh 3
p2185[0...n] Load monitoring torque threshold 1, upper / M_thresh 1 upper
p2185[0...n] Load monitoring force threshold 1, upper / M_thresh 1 upper
p2186[0...n] Load monitoring torque threshold 1, lower / M_thresh 1 lower
p2186[0...n] Load monitoring force threshold 1, lower / M_thresh 1 lower
p2187[0...n] Load monitoring torque threshold 2, upper / M_thresh 2 upper
p2187[0...n] Load monitoring force threshold 2, upper / M_thresh 2 upper
p2188[0...n] Load monitoring torque threshold 2, lower / M_thresh 2 lower
p2188[0...n] Load monitoring force threshold 2, lower / M_thresh 2 lower
p2189[0...n] Load monitoring torque threshold 3, upper / M_thresh 3 upper
p2189[0...n] Load monitoring force threshold 3, upper / M_thresh 3 upper
p2190[0...n] Load monitoring torque threshold 3, lower / M_thresh 3 lower
p2190[0...n] Load monitoring force threshold 3, lower / M_thresh 3 lower
p2192[0...n] Load monitoring, delay time / Load monit t_del
p2194[0...n] Torque threshold value 2 / M_thresh val 2
p2195[0...n] Torque utilization switch-off delay / M_util t_off
p2201[0...n] CO: Technology controller, fixed value 1 / Tec_ctr fix val 1
p2202[0...n] CO: Technology controller, fixed value 2 / Tec_ctr fix val 2
p2203[0...n] CO: Technology controller, fixed value 3 / Tec_ctr fix val 3
p2204[0...n] CO: Technology controller, fixed value 4 / Tec_ctr fix val 4
p2205[0...n] CO: Technology controller, fixed value 5 / Tec_ctr fix val 5

© Siemens AG, 2005. All rights reserved

p2206[0...n] CO: Technology controller, fixed value 6 / Tec_ctr fix val 6
p2207[0...n] CO: Technology controller, fixed value 7 / Tec_ctr fix val 7
p2208[0...n] CO: Technology controller, fixed value 8 / Tec_ctr fix val 8
p2209[0...n] CO: Technology controller, fixed value 9 / Tec_ctr fix val 9
p2210[0...n] CO: Technology controller, fixed value 10 / Tec_ctr fix val 10
p2211[0...n] CO: Technology controller, fixed value 11 / Tec_ctr fix val 11
p2212[0...n] CO: Technology controller, fixed value 12 / Tec_ctr fix val 12
p2213[0...n] CO: Technology controller, fixed value 13 / Tec_ctr fix val 13
p2214[0...n] CO: Technology controller, fixed value 14 / Tec_ctr fix val 14
p2215[0...n] CO: Technology controller, fixed value 15 / Tec_ctr fix val 15
p2230[0...n] Technology controller motorized potentiometer configuration / Tec_ctr mop config
p2237[0...n] Technology controller motorized potentiometer maximum value / Tec_ctr mop max
p2238[0...n] Technology controller motorized potentiometer minimum value / Tec_ctr mop min
p2240[0...n] Technology controller motorized potentiometer starting value / Tec_ctrl mop start
p2247[0...n] Technology controller motorized potentiometer ramp-up time / Tec_ctr mop t_r-up
p2248[0...n] Technology controller motorized potentiometer ramp-down time / Tec_ctrMop t_rdown
p2900[0...n] CO: Fixed value 1 [%] / Fixed value 1 [%]
p2901[0...n] CO: Fixed value 2 [%] / Fixed value 2 [%]
p2930[0...n] CO: Fixed value M [Nm] / Fixed value M [Nm]
p2930[0...n] CO: Fixed value F [N] / Fixed value M [Nm]
p3820[0...n] Friction characteristic, value n0 / Friction n0
p3820[0...n] Friction characteristic, value n0 / Friction n0
p3821[0...n] Friction characteristic, value n1 / Friction n1
p3821[0...n] Friction characteristic, value n1 / Friction n1
p3822[0...n] Friction characteristic, value n2 / Friction n2
p3822[0...n] Friction characteristic, value n2 / Friction n2
p3823[0...n] Friction characteristic, value n3 / Friction n3
p3823[0...n] Friction characteristic, value n3 / Friction n3
p3824[0...n] Friction characteristic, value n4 / Friction n4
p3824[0...n] Friction characteristic, value n4 / Friction n4
p3825[0...n] Friction characteristic, value n5 / Friction n5
p3825[0...n] Friction characteristic, value n5 / Friction n5
p3826[0...n] Friction characteristic, value n6 / Friction n6
p3826[0...n] Friction characteristic, value n6 / Friction n6
p3827[0...n] Friction characteristic, value n7 / Friction n7
p3827[0...n] Friction characteristic, value n7 / Friction n7
p3828[0...n] Friction characteristic, value n8 / Friction n8
p3828[0...n] Friction characteristic, value n8 / Friction n8
p3829[0...n] Friction characteristic, value n9 / Friction n9
p3829[0...n] Friction characteristic, value n9 / Friction n9
p3830[0...n] Friction characteristic, value M0 / Friction M0
p3830[0...n] Friction characteristic, value M0 / Friction M0
p3831[0...n] Friction characteristic, value M1 / Friction M9
p3831[0...n] Friction characteristic, value M1 / Friction M9
p3832[0...n] Friction characteristic, value M2 / Friction M2
p3832[0...n] Friction characteristic, value M2 / Friction M2
p3833[0...n] Friction characteristic, value M3 / Friction M3
p3833[0...n] Friction characteristic, value M3 / Friction M3
p3834[0...n] Friction characteristic, value M4 / Friction M4
p3834[0...n] Friction characteristic, value M4 / Friction M4
p3835[0...n] Friction characteristic, value M5 / Friction M5
p3835[0...n] Friction characteristic, value M5 / Friction M5
p3836[0...n] Friction characteristic, value M6 / Friction M6

© Siemens AG, 2005. All rights reserved

p3836[0...n]	Friction characteristic, value M6 / Friction M6
p3837[0...n]	Friction characteristic, value M7 / Friction M7
p3837[0...n]	Friction characteristic, value M7 / Friction M7
p3838[0...n]	Friction characteristic, value M8 / Friction M8
p3838[0...n]	Friction characteristic, value M8 / Friction M8
p3839[0...n]	Friction characteristic, value M9 / Friction M9
p3839[0...n]	Friction characteristic, value M9 / Friction M9
p3846[0...n]	Friction characteristic plot ramp-up/ramp-down time / Frict plot t_up/dn
p3847[0...n]	Friction characteristic plot warm-up time / Frict plot t_warm
p7035[0...n]	Par_circuit circulating current control, operating mode / Circ_I mode
p7036[0...n]	Par_circuit circulating current control, proportional gain / Circ_I Kp
p7037[0...n]	Par_circuit circulating current control, integral action time / Circ_I TN
p7038[0...n]	Par_circuit circulating current control, limit / Circ_I limit

© Siemens AG, 2005. All rights reserved

1.3.3 Parameters for encoder data sets (EDS)

Note:

References: /IH1/ SINAMICS S120 Installation and Start-Up Manual "Data sets" section

The following list contains the encoder-data-set-dependent parameters.

Product: SINAMICS S, Version: 2302000, Label: ., Language: eng

p0141[0...n] Encoder interface (Sensor Module) component number / Enc_interf comp_no
p0142[0...n] Encoder component number / Encoder comp_no
p0144[0...n] Sensor Module detection via LED / SM detection LED
p0145[0...n] Activate/de-activate encoder interface / Enc_intf act/deact
r0146[0...n] Encoder interface active/inactive / Enc_intf act/inact
r0147[0...n] Sensor Module EPROM data version / SM EEPROM version
r0148[0...n] Sensor Module firmware version / SM FW_version
p0400[0...n] Enc type selection / Enc type selection
p0404[0...n] Encoder configuration effective / Enc_config eff
p0405[0...n] Square-wave encoder track A/B / Sq-wave enc A/B
p0407[0...n] Linear encoder grid division / Enc grid div
p0408[0...n] Rotary encoder pulse No. / Rot enc pulse No.
p0410[0...n] Encoder inversion actual value / Enc inv act value
p0418[0...n] Fine resolution Gx_XIST1 (in bits) / Enc fine Gx_XIST1
p0419[0...n] Fine resolution absolute value Gx_XIST2 (in bits) / Enc fine Gx_XIST2
p0421[0...n] Absolute encoder rotary multi-turn resolution / Enc abs multiturn
p0422[0...n] Absolute value encoder linear measuring step resolution / Enc abs meas step
p0423[0...n] Absolute value encoder rotary single-turn resolution / Enc abs singleturn
p0424[0...n] Encoder, linear zero mark distance / Enc lin ZM_dist
p0425[0...n] Encoder, rotary zero mark distance / Enc rot dist ZM
p0430[0...n] Sensor Module configuration / SM config
p0431[0...n] Angular commutation offset / Ang_com offset
p0432[0...n] Gearbox factor, numerator / Gearb_fact numer
p0433[0...n] Gearbox factor, denominator / Gearb_fact denom
p0440[0...n] Copy encoder serial number / Copy enc ser_no
p0441[0...n] Encoder commissioning serial number part 1 / Enc comm ser_no 1
p0442[0...n] Encoder commissioning serial number part 2 / Enc comm ser_no 2
p0443[0...n] Encoder commissioning serial number part 3 / Enc comm ser_no 3
p0444[0...n] Encoder commissioning serial number part 4 / Enc comm ser_no 4
p0445[0...n] Encoder commissioning serial number part 5 / Enc comm ser_no 5

© Siemens AG, 2005. All rights reserved

1.3.4 Parameters for motor data sets (MDS)

Note:

References: /IH1/ SINAMICS S120 Installation and Start-Up Manual "Data sets" section

The following list contains the motor-data-set-dependent parameters.

Product: SINAMICS S, Version: 2302000, Label: ., Language: eng

p0131[0...n] Motor component number / Mot comp_no
p0300[0...n] Mot type selection / Mot type selection
p0300[0...n] Mot type selection / Mot type selection
p0301[0...n] Motor code number selection / Mot code No. sel
r0302[0...n] Motor code number of motor with DRIVE-CLiQ / Motor code Mot DLQ
p0304[0...n] Rated motor voltage / Mot U_rated
p0305[0...n] Rated motor current / Mot I_rated
p0306[0...n] Number of motors connected in parallel / No. motors
p0307[0...n] Rated motor power / Mot P_rated
p0308[0...n] Rated motor power factor / Mot CosPhi_rated
p0309[0...n] Rated motor efficiency / Mot eta_rated
p0310[0...n] Rated motor frequency / Mot f_rated
p0311[0...n] Rated motor speed / Mot n_rated
p0311[0...n] Rated motor velocity / Mot n_rated
p0312[0...n] Rated motor torque / Mot M_rated
p0312[0...n] Rated motor force / Mot M_rated
r0313[0...n] Motor pole pair number, actual (or calculated) / Mot PolePairNo act
p0314[0...n] Motor pole pair number / Mot pole pair No.
p0315[0...n] Motor pole pair width / MotPolePair width
p0316[0...n] Motor torque constant / Mot kT
p0316[0...n] Motor force constant / Mot kT
p0317[0...n] Motor voltage constant / Mot kE
p0317[0...n] Motor voltage constant / Mot kE
p0318[0...n] Motor stall current / Mot I_standstill
p0319[0...n] Motor stall torque / Mot M_standstill
p0319[0...n] Motor stall force / Mot M_standstill
p0320[0...n] Motor rated magnetization current/short-circuit current / Mot I_mag_rated
p0322[0...n] Maximum motor speed / Mot n_max
p0322[0...n] Motor velocity, maximum / Mot n_max
p0323[0...n] Maximum motor current / Mot I_max
p0325[0...n] Pole position identification current, 1st phase / Pol-ID I 1st ph
p0326[0...n] Stall torque correction factor / Mot M_stallCorrFac
p0327[0...n] PE spindle, optimum load angle / Mot load angle opt
p0328[0...n] PE spindle, reluctance torque constant / Mot kT_reluctance
p0329[0...n] Pole position identification current / Mot Pol-ID curr
r0330[0...n] Rated motor slip / Mot slip_rated
r0331[0...n] Motor magnetizing current/short-circuit current (actual) / Mot I_mag_ratedAct
r0332[0...n] Rated motor power factor / Mot CosPhi_rated
r0333[0...n] Rated motor torque / Mot M_rated
r0333[0...n] Rated motor force / Mot M_rated
r0334[0...n] Motor-torque constant, actual / Mot kT act
r0334[0...n] Motor force constant, actual / Mot kT act

© Siemens AG, 2005. All rights reserved

p0335[0...n] Motor cooling type / Motor cooling type
r0336[0...n] Rated motor frequency (actual) / Mot f_rated act
r0337[0...n] Rated motor EMF / Mot EMF_rated
r0337[0...n] Rated motor EMF / Mot EMF_rated
p0338[0...n] Motor limit current / Mot I_limit
r0339[0...n] Rated motor voltage / Mot V_rated
p0341[0...n] Motor moment of inertia / Mot M_mom of inert
p0341[0...n] Motor weight / Mot M_mom of inert
p0342[0...n] Ratio between the total and motor moment of inertia / Mot MomInert Ratio
p0344[0...n] Motor weight / Motor weight
r0345[0...n] Nominal motor starting time / Mot t_start_rated
p0346[0...n] Motor excitation build-up time / Mot t_excitation
p0347[0...n] Motor de-excitation time / Mot t_de-excitat.
p0348[0...n] Speed at the start of field weakening Vdc = 600 V / Mot n_field weaken
p0348[0...n] Velocity at the start of field weakening Vdc = 600 V / Mot n_field weaken
p0350[0...n] Motor stator resistance, cold / Mot R_stator cold
p0352[0...n] Cable resistance / Mot R_cable cold
p0353[0...n] Motor series inductance / Mot L_series
p0354[0...n] Motor rotor resistance, cold / Mot R_rotor cold
p0356[0...n] Motor stator leakage inductance / Mot L_stator leak.
p0357[0...n] Motor stator inductance, d axis / Mot L_stator_d
p0358[0...n] Motor rotor leakage inductance / Mot L_rotor leak.
p0360[0...n] Motor magnetizing inductance / Mot L_main
p0362[0...n] Saturation characteristic flux 1 / Mot saturat.flux 1
p0363[0...n] Saturation characteristic flux 2 / Mot saturat.flux 2
p0364[0...n] Saturation characteristic flux 3 / Mot saturat.flux 3
p0365[0...n] Saturation characteristic flux 4 / Mot saturat.flux 4
p0366[0...n] Saturation characteristic I_mag 1 / Mot sat. I_mag 1
p0367[0...n] Saturation characteristic I_mag 2 / Mot sat. I_mag 2
p0368[0...n] Saturation characteristic I_mag 3 / Mot sat. I_mag 3
p0369[0...n] Saturation characteristic I_mag 4 / Mot sat. I_mag 4
r0370[0...n] Motor stator resistance, cold / Mot R_stator cold
r0372[0...n] Cable resistance / Mot R_cable
r0373[0...n] Motor rated stator resistance / Mot R_stator rated
r0374[0...n] Motor rotor resistance, cold / Mot R_rotor cold
r0376[0...n] Rated motor rotor resistance / Mot R_rotor rated
r0377[0...n] Motor leakage inductance, total / Mot L_leak total
r0378[0...n] Motor stator inductance, d axis / Mot L_stator_d
r0382[0...n] Motor main inductance, transformed / Mot L_main trans
r0384[0...n] Motor rotor time constant / Mot T_rotor
r0386[0...n] Motor stator leakage time constant / Mot T_stator leak
p0391[0...n] Current controller adaptation, lower starting point / I_adapt pt. lower
p0392[0...n] Current controller adaptation, upper starting point / I_adapt pt. upper
p0393[0...n] Current controller adaptation, P gain, scaling upper / I_adapt Kp upper
r0395[0...n] Stator resistance, actual / R_stator active
r0396[0...n] Rotor resistance, actual / R_rotor active
p0600[0...n] Motor temperature sensor for monitoring / Mot temp_sensor
p0601[0...n] Motor temperature sensor type / Mot temp_sensortyp
p0604[0...n] Motor overtemperature alarm threshold / Mot TempAlrmThresh
p0605[0...n] Motor overtemperature fault threshold / MotTempFaultThresh
p0606[0...n] Motor overtemperature timer / Mot TempTimeStage
p0607[0...n] Temperature sensor fault timer / Sensor fault time
p0610[0...n] Response to motor overtemperature condition / Mot temp response

© Siemens AG, 2005. All rights reserved

p0620[0...n]	Thermal adaptation, stator and rotor resistance / Mot therm_adapt R
p0621[0...n]	Temperature identification after restart / Temp_ident restart
p0622[0...n]	Motor excitation time for temp_ident after powering-up again / t_excit temp_id
p0625[0...n]	Motor ambient temperature / Mot T_ambient
p0626[0...n]	Motor overtemperature, stator core / Mot T_over core
p0627[0...n]	Motor overtemperature, stator winding / Mot T_over stator
p0628[0...n]	Rotor winding overtemperature / Mot T_over rotor
r0630[0...n]	Motor temperature model ambient temperature / MotTMod T_amb.
r0631[0...n]	Motor temperature model, stator core temperature / MotTMod T_iron
r0632[0...n]	Motor temperature model, stator winding temperature / MotTMod T_copper
r0633[0...n]	Motor temperature model, rotor temperature / MotTMod T_rotor
p0643[0...n]	Overvoltage protection for synchronous motors / Overvolt_protect
p0650[0...n]	Actual motor operating hours / Mot t_oper act
p0651[0...n]	Motor operating hours maintenance interval / Mot t_op maint
p0826[0...n]	Motor changeover, motor number / Mot_chng mot No.
p0827[0...n]	Motor changeover status word bit number / Mot_chg ZSW bitNo.
p1909[0...n]	Motor data identification control word / MotID STW
p1980[0...n]	Pole position identification technique / Pol-ID technique
p1980[0...n]	Pole position identification technique / Pol-ID technique
p1981[0...n]	Pole position identification maximum distance / Pol-ID max dist
p1982[0...n]	Pole position identification selection / Pol-ID selection
p1982[0...n]	Pole position identification selection / Pol-ID selection
p1991[0...n]	Motor changeover, angular commutation correction / Ang_com corr
p1993[0...n]	Pole position identification current, motion-based / Pol-ID I motion
p1994[0...n]	Pole position identification rise time, motion-based / Pol-ID T motion
p1995[0...n]	Pole position identification gain, motion-based / Pol-ID kp motion
p1995[0...n]	Pole position identification gain, motion-based / Pol-ID kp motion
p1996[0...n]	Pole position identification, integral action time, motion-based / Pol-ID Tn motion
p1997[0...n]	Pole position identification, smoothing time, motion-based / Pol-ID Tg motion

© Siemens AG, 2005. All rights reserved

Function diagrams

2

Contents

2.1	Contents: function diagrams	2-711
2.2	Explanations for the function block diagrams	2-719
2.3	Overviews	2-724
2.4	CU320 input/output terminals	2-744
2.5	CX32 input/output terminals	2-751
2.6	PROFIBUS	2-755
2.7	Internal control/status words	2-782
2.8	Sequence control	2-793
2.9	Brake control	2-796
2.10	Safety Integrated	2-801
2.11	Setpoint channel	2-807
2.12	Setpoint channel not activated	2-817
2.13	Servo control	2-819
2.14	VECTOR control	2-845
2.15	Technology functions	2-871
2.16	Technology controller	2-873
2.17	Messages and monitoring functions	2-877
2.18	Faults and Alarms	2-883
2.19	Test sockets	2-888
2.20	Data records	2-890
2.21	Basic Infeed	2-895
2.22	Smart Infeed	2-902
2.23	Active Infeed	2-911

© Siemens AG, 2005. All rights reserved

2.24	Terminal Board 30 (TB30)	2-922
2.25	Communication Board CAN 10 (CBC10)	2-927
2.26	Terminal Module 15 for SINAMICS (TM15DI/DO)	2-934
2.27	Terminal Module 31 (TM31)	2-938
2.28	Terminal Module 41 (TM41)	2-949
2.29	Voltage Sensing Module (VSM)	2-951

© Siemens AG, 2005. All rights reserved

2.1 Contents: function diagrams

2.2 Explanations for the function block diagrams 2-719
1020 – Explanation of the symbols (part 1) 2-720
1021 – Explanation of the symbols (part 2) 2-721
1024 – Explanation of the symbols (part 3) 2-722
1025 – Using BICO technology 2-723

2.3 Overviews 2-724
1510 – CU320 input/output terminals 2-725
1512 – CX32 input/output terminals 2-726
1520 – PROFIBUS 2-727
1530 – Internal control/status words 2-728
1550 – Setpoint channel 2-729
1580 – Servo encoder evaluations (position, speed, temperature) 2-730
1590 – Servo speed control and V/f control 2-731
1610 – Servo generation of the torque limits 2-732
1630 – Servo current control 2-733
1680 – VECTOR encoder evaluations (position, speed, temperature) 2-734
1690 – VECTOR V/f control 2-735
1700 – VECTOR speed control and generation of the torque limits 2-736
1710 – VECTOR current control 2-737
1750 – Monitoring, faults, alarms 2-738
1773 – Basic Infeed 2-739
1774 – Active Infeed 2-740
1775 – Smart Infeed 2-741
1790 – Terminal Board 30 (TB30) 2-742
1840 – Terminal Module 31 (TM31) 2-743

2.4 CU320 input/output terminals 2-744
2100 – Digital inputs, electrically isolated (DI 0 ... DI 3) 2-745
2120 – Digital inputs, electrically isolated (DI 4 ... DI 7) 2-746
2130 – Digital inputs/outputs, bi-directional (DI/DO 8 ... DI/DO 9) 2-747
2131 – Digital inputs/outputs, bi-directional (DI/DO 10 ... DI/DO 11) 2-748
2132 – Digital inputs/outputs, bi-directional (DI/DO 12 ... DI/DO 13) 2-749
2133 – Digital inputs/outputs, bi-directional (DI/DO 14 ... DI/DO 15) 2-750

© Siemens AG, 2005. All rights reserved

2.5 CX32 input/output terminals 2-751
2220 – Digital inputs, electrically isolated (DI 0 ... DI 3) 2-752
2230 – Digital inputs/outputs, bi-directional (DI/DO 8 ... DI/DO 9) 2-753
2231 – Digital inputs/outputs, bi-directional (DI/DO 10 ... DI/DO 11) 2-754

2.6 PROFIBUS 2-755
2410 – PROFIBUS address, diagnostics 2-756
2420 – Messages and process data 2-757
2440 – Standard/manufacturer-specific receive telegram interconnection 2-758
2441 – STW1 control word interconnection (p2038 = 2) 2-759
2442 – STW1 control word interconnection (p2038 = 0) 2-760
2443 – STW1 control word interconnection (p2038 = 1) 2-761
2444 – STW2 control word interconnection (p2038 = 0) 2-762
2445 – STW2 control word interconnection (p2038 = 1) 2-763
2447 – E_STW1 control word infeed interconnection 2-764
2448 – CU_STW control word infeed interconnection 2-765
2449 – A_DIGITAL interconnection 2-766
2450 – Standard/manufacturer-specific send telegram interconnection 2-767
2451 – ZSW1 status word interconnection (p2038 = 2) 2-768
2452 – ZSW1 status word interconnection (p2038 = 0) 2-769
2453 – ZSW1 status word interconnection (p2038 = 1) 2-770
2454 – ZSW2 status word interconnection (p2038 = 0) 2-771
2455 – ZSW2 status word interconnection (p2038 = 1) 2-772
2456 – MELDW status word interconnection 2-773
2457 – E_ZSW1 status word infeed interconnection 2-774
2458 – CU_ZSW status word interconnection 2-775
2459 – E_DIGITAL interconnection 2-776
2460 – Receive telegram, free interconnection via BICO (p0922 = 999) 2-777
2470 – Send telegram, free interconnection via BICO (p0922 = 999) 2-778
2472 – Status words, free interconnection 2-779
2481 – Receive telegram, free interconnection via BICO (p0922 = 999) 2-780
2483 – Send telegram, free interconnection via BICO (p0922 = 999) 2-781

2.7 Internal control/status words 2-782
2501 – Control word sequential control 2-783
2503 – Status word sequential control 2-784

© Siemens AG, 2005. All rights reserved

2505 – Control word setpoint channel 2-785
2520 – Control word speed controller 2-786
2522 – Status word speed controller 2-787
2534 – Status word monitoring 1 2-788
2536 – Status word monitoring 2 2-789
2537 – Status word monitoring 3 2-790
2546 – Control word faults/alarms 2-791
2548 – Status word, faults/warnings 1 and 2 2-792

2.8 Sequence control 2-793
2610 – Processor 2-794
2634 – Missing enable signals, line contactor control 2-795

2.9 Brake control 2-796
2701 – Simple brake control (r0108.14 = 0) 2-797
2704 – Extended brake control/zero speed detection (r0108.14 = 1) 2-798
2707 – Extended braking control / open and close brake (r0108.14 = 1) 2-799
2711 – Extended brake control/signal outputs (r0108.14 = 1) 2-800

2.10 Safety Integrated 2-801
2800 – Parameter manager 2-802
2802 – Monitoring and faults/alarms 2-803
2804 – Status words 2-804
2810 – Safe standstill (SH) 2-805
2814 – Safe brake control (SBC) 2-806

2.11 Setpoint channel 2-807
3010 – Fixed speed setpoints 2-808
3020 – Motorized potentiometer 2-809
3030 – Main/added setpoint, setpoint scaling, jogging 2-810
3040 – Direction limitation and direction reversal 2-811
3050 – Suppression bandwidth and speed limiting 2-812
3060 – Simple ramp-function generator 2-813
3070 – Extended ramp-function generator 2-814
3080 – Ramp-function generator selection, status word, tracking 2-815
3090 – Dynamic Servo Control (DSC) 2-816

© Siemens AG, 2005. All rights reserved

2.12 Setpoint channel not activated 2-817
3095 – Generation of the speed limits (r0108.8 = 0) 2-818

2.13 Servo control 2-819
4704 – Position and temperature measurement, encoder 1 ... 3 2-820
4710 – Actual speed value and rotor position measurement, motor encoder (encoder 1) . 2-821
4720 – Encoder interface, receive signals, encoder 1 ... 3 2-822
4730 – Encoder interface, send signals, encoder 1 ... 3 2-823
4735 – Reference mark search with equivalent zero mark, encoder 1 ... 3 2-824
4740 – Measuring input evaluation, measured value memory, encoder 1 ... 3 2-825
5020 – Speed setpoint filter and speed pre-control 2-826
5030 – Reference model/pre-control balancing/setpoint speed controller 2-827
5040 – Speed controller with encoder 2-828
5050 – Kp_n-/Tn_n adaptation 2-829
5060 – Torque setpoint, control type switchover 2-830
5210 – Speed controller without encoder 2-831
5300 – V/f control for diagnostics 2-832
5490 – Speed control configuration 2-833
5492 – Closed-loop control status word 1 2-834
5493 – Closed-loop control status word 3 2-835
5610 – Torque limiting/reduction/interpolator 2-836
5620 – Motor/generator torque limit 2-837
5630 – Upper/lower torque limit 2-838
5640 – Mode changeover, power/current limiting 2-839
5650 – Vdc_max controller and Vdc_min controller 2-840
5710 – Current setpoint filter 2-841
5714 – Iq and Id controller 2-842
5722 – Specified field current, flux controller 2-843
5730 – Interface to the Motor Module (gating signals, current actual values) 2-844

2.14 VECTOR control 2-845
6004 – Raw signal and temperature measurement 2-846
6010 – Actual speed value and rotor position measurement, motor encoder (encoder 1) . 2-847
6030 – Speed setpoint, droop 2-848
6031 – Pre-control balancing for reference/acceleration model 2-849
6040 – Speed controller with/without encoder 2-850

© Siemens AG, 2005. All rights reserved

6050 – Kp_n-/Tn_n adaptation 2-851
6060 – Torque setpoint 2-852
6220 – Vdc_max controller and Vdc_min controller 2-853
6300 – V/f characteristic and voltage boost 2-854
6310 – Resonance damping and slip compensation 2-855
6320 – Vdc_max controller and Vdc_min controller 2-856
6490 – Speed control configuration 2-857
6491 – Flux control configuration 2-858
6492 – Closed-loop control status word 1 2-859
6493 – Closed-loop control status word 3 2-860
6630 – Upper/lower torque limit 2-861
6640 – Current/power/torque limits 2-862
6710 – Current setpoint filter 2-863
6714 – Iq and Id controller 2-864
6722 – Field weakening characteristic, Id setpoint 2-865
6723 – Field weakening controller, flux controller for induction motor (p0300 = 1) 2-866
6724 – Field weakening controller for synchronous motor (p0300 = 2) 2-867
6730 – Interface to Motor Module for induction motor (p0300 = 1) 2-868
6731 – Interface to Motor Module for synchronous motor (p0300 = 2) 2-869
6799 – Display signals 2-870

2.15 Technology functions 2-871
7010 – Friction characteristic curve 2-872

2.16 Technology controller 2-873
7950 – Fixed values (r0108.16 = 1) 2-874
7954 – Motorized potentiometer (r0108.16 = 1) 2-875
7958 – Closed-loop control (r0108.16 = 1) 2-876

2.17 Messages and monitoring functions 2-877
8010 – Speed messages 2-878
8012 – Torque messages, motor blocked/stalled 2-879
8013 – Load monitoring (r0108.17 = 1) 2-880
8014 – Thermal monitoring power section 2-881
8016 – Thermal monitoring motor 2-882

© Siemens AG, 2005. All rights reserved

2.18 Faults and Alarms 2-883
8060 – Fault buffer 2-884
8065 – Alarm buffer 2-885
8070 – Fault/warning trigger word (r2129) 2-886
8075 – Fault/warning configuration 2-887

2.19 Test sockets 2-888
8134 – Measuring sockets 2-889

2.20 Data records 2-890
8560 – Command data sets (CDS) 2-891
8565 – Drive data sets (DDS) 2-892
8570 – Encoder data sets (EDS) 2-893
8575 – Motor data sets (MDS) 2-894

2.21 Basic Infeed 2-895
8720 – Control word sequential control infeed 2-896
8726 – Status word sequential control infeed 2-897
8732 – Processor 2-898
8734 – Missing enable signals, line contactor control 2-899
8750 – Interface to the basic infeed power unit (control signals, actual values) 2-900
8760 – Messages and monitors 2-901

2.22 Smart Infeed 2-902
8820 – Control word sequential control infeed 2-903
8826 – Status word sequential control infeed 2-904
8828 – Status word infeed 2-905
8832 – Processor 2-906
8834 – Missing enable signals, line contactor control 2-907
8850 – Interface to the Smart Infeed (control signals, actual values) 2-908
8860 – Messages and monitors, supply voltage monitor 2-909
8864 – Messages and monitoring signals, line frequency and Vdc monitoring 2-910

2.23 Active Infeed 2-911
8920 – Control word sequential control infeed 2-912
8926 – Status word sequential control infeed 2-913
8928 – Status word infeed 2-914
8932 – Processor 2-915

© Siemens AG, 2005. All rights reserved

8934 – Missing enable signals, line contactor control 2-916
8940 – Controller control factor reserve/controller DC link voltage 2-917
8946 – Current pre-control/current controller/gating unit 2-918
8950 – Interface to the Active Infeed (control signals, actual values) 2-919
8960 – Messages and monitors, supply voltage monitor 2-920
8964 – Messages and monitoring signals, line frequency and Vdc monitoring 2-921

2.24 Terminal Board 30 (TB30) 2-922
9100 – Digital inputs, electrically isolated (DI 0 ... DI 3) 2-923
9102 – Digital outputs, electrically isolated (DO 0 ... DO 3) 2-924
9104 – Analog inputs (AI 0 ... AI 1) 2-925
9106 – Analog outputs (AO 0 ... AO 1) 2-926

2.25 Communication Board CAN 10 (CBC10) 2-927
9204 – Receive message frame, free PDO mapping (p8744 = 2) 2-928
9206 – Receive message frame, predefined connection set (p8744 = 1) 2-929
9208 – Send message frame, free PDO mapping (p8744 = 2) 2-930
9210 – Send message frame, predefined connection set (p8744 = 1) 2-931
9220 – Control word CANopen 2-932
9226 – Status word CANopen 2-933

2.26 Terminal Module 15 for SINAMICS (TM15DI/DO) 2-934
9400 – Digital inputs/outputs, bi-directional (DI/DO 0 ... DI/DO 7) 2-935
9401 – Digital inputs/outputs, bi-directional (DI/DO 8 ... DI/DO 15) 2-936
9402 – Digital inputs/outputs, bi-directional (DI/DO 16 ... DI/DO 23) 2-937

2.27 Terminal Module 31 (TM31) 2-938
9550 – Digital inputs, electrically isolated (DI 0 ... DI 3) 2-939
9552 – Digital inputs, electrically isolated (DI 4 ... DI 7) 2-940
9556 – Digital relay outputs, electrically isolated (DO 0 ... DO 1) 2-941
9560 – Digital inputs/outputs, bi-directional (DI/DO 8 ... DI/DO 9) 2-942
9562 – Digital inputs/outputs, bi-directional (DI/DO 10 ... DI/DO 11) 2-943
9566 – Analog input 0 (AI 0) 2-944
9568 – Analog input 1 (AI 1) 2-945
9572 – Analog outputs (AO 0 ... AO 1) 2-946
9576 – Temperature evaluation KTY/PTC 2-947
9577 – Sensor evaluation KTY/PTC 2-948

© Siemens AG, 2005. All rights reserved

2.28 Terminal Module 41 (TM41) 2-949
9674 – Incremental encoder emulation 2-950

2.29 Voltage Sensing Module (VSM) 2-951
9880 – Analog inputs (AI 0 ... AI 3) 2-952
9886 – Temperature evaluation 2-953
9887 – Sensor evaluation KTY/PTC 2-954

© Siemens AG, 2005. All rights reserved

2.2 Explanations for the function block diagrams

Function diagrams

1020 – Explanation of the symbols (part 1)	2-720
1021 – Explanation of the symbols (part 2)	2-721
1024 – Explanation of the symbols (part 3)	2-722
1025 – Using BICO technology	2-723

© Siemens AG, 2005. All rights reserved

Parameter

Symbol	Meaning
Parameter name [Units] rxxxx [x..y]	Monitoring parameter (parameter may appear multiple times).
Parameter name [Units] Index name rxxxx[x]	Monitoring parameter with index(parameter may appear a multiple number of times).
[aaaa.b] Parameter name from ... to [Units] pxxxx[y...z] (Def)	Setting parameter (if the parameter appears a multiple number of times, then diagram references are specified).
[aaaa.b] Parameter name Index name from ... to [Units] pxxxx[y] (Def)	Setting parameter with index (if the parameter appears a multiple number of times, then diagram references are specified).

Connectors

Symbol	Meaning
Parameter name pxxxx[y...z] (xxxx [y])	Connector input CI with index range [y...z]
Parameter name Index name pxxxx[y] (xxxx [x])	Connector input CI with index [y]
Parameter name [Units] rxxxx[y...z]	Connector output CO with [dimension units] and index range [y...z] (the parameter may appear multiple times).
Parameter name [Units] Index name rxxxx[y]	Connector output CO [dimension units] and with index [y] (the parameter may appear multiple times).

Binectors

Symbol	Meaning
Parameter name pxxxx[y...z] (Def.x)	Binector input BI with index range [y...z] and factory setting (Def.x) with bit x.
Parameter name Bit name pxxxx[y] (Def.x)	Binector input BI with index [y] and factory setting (Def.x) with bit x.
Parameter name rxxxx	Binector output BO (the parameter may appear multiple times).
Parameter name Bit name rxxxx.yy	Binector output BO with bit yy (the parameter may appear multiple times).

Connectors/binectors

Symbol	Meaning
Parameter name rxxxx rxxxx	Connector/binector output CO/BO

Cross references between diagrams

Symbol	Meaning
Signal path	The function diagrams are sub-divided into signal paths 1...8 for faster orientation.
Text → [aaaa.b]	Text = Unique signal designation aaaa = Signal goes to the target diagram aaaa b = Signal goes to signal path b
[cccc.d] → Text	Text = Unique signal designation cccc = Comes from source diagram cccc d = Signal comes from signal path d

To "function diagram name" [aaaa.b] = for binectors.
Notice: No cross-reference to the main diagrams or that go to or from overview diagrams.

Cross references for control bits

Symbol	Meaning
pxxxx [aaaa.b]	pxxxx = original parameter of signal aaaa = signal comes from the source diagram aaaa b = Signal comes from signal path b

Data sets

Symbol	Meaning
pxxxx[C]	Parameter belongs to the command data set (CDS).
pxxxx[D]	Parameter belongs to the drive data set (DDS).
pxxxx[E]	Parameter belongs to the encoder data set (EDS).
pxxxx[M]	Parameter belongs to the motor data set (MDS).
pxxxx[P]	Parameter belongs to the power module data set (PDS)

Information on parameters, binectors, connectors

Symbol	Meaning
Parameter name [Units]	Parameter name (max. 18 characters) [dimension units]
rxxxx[y] or rxxxx[y...z] rxxxx[y] .ww rxxxx.ww	"r" = monitoring parameter. These parameters are read-only "xxxx" stands for a four-digit parameter number "[y]" specifies the valid index, "[y...z]" specifies the applicable index range ".ww" specifies the bit number (e.g. 0...15).
pxxxx[y] or pxxxx[y...z] pxxxx[y] .ww pxxxx.ww	"p" = setting parameter. These parameters can be changed. "xxxx" stands for a four-digit parameter number, "[y]" specifies the applicable index, "[y...z]" specifies the applicable index range ".ww" specifies the bit number (e.g. 0...15).
from ... to	Value range
(xxxx[y])	Parameter number (xxxx) and Index number [y].
(Def)	Factory setting
(Def.w)	Factory setting with bit number as prefix.
[aaaa.b]	Diagram references for setting parameters that occur a multiple number of times. [Function diagram number, signal path]

Sampling times

Symbol	Meaning
pxxxx[Y] (ZZZ.ZZ µs)	Setting parameter with factory setting to select the time slice.
p0115[y] (Drive Object)	Time slice depending on the pre-setting p0112 of the drive object.
p0115[y] (Motor Modules)	Time slide depending on the rated pulse frequency of the motor module.
PROFIBUS sampling time	a) If clock-cycle synchronous, then bus cycle time alias DP cycle (Tdp). b) Otherwise 4000.00 µs.
CAN bus sampling time	Time slice 4000.00 µs.
Background Refer to [1020.7]	There is no fixed sampling time for this function. The processing is made in the background. The cycle time depends on the computational load of the control unit.
Not relevant Refer to [1020.7]	A static state is displayed here. The sampling time data is not relevant.

1	2	3	4	5	6	7	8
DO: All objects					fp_1020_01_eng.vsd	Function diagram	- 1020 -
General - explanation of the symbols (part 1)					18.05.05 V02.03.00	SINAMICS S	

Figure 2-1 1020 – Explanation of the symbols (part 1)

© Siemens AG, 2005. All rights reserved
SINAMICS S List Manual, Edition 06.2005

Pre-assigned binectors and connectors

Fixed percentage values

-10 000.00...10 000.00 %
p2900[D] (0.00)
Fixed value 1 [%]
p2900[D]

-10 000.00...10 000.00 %
p2901[D] (0.00)
Fixed value 2 [%]
p2901[D]

Fixed speed values

-210 000.000...210 000.000 RPM
pxx20[D] (0.000)
Fixed value 1 [n]
pxxxx[D]

-210 000.000...210 000.000 RPM
pxx21[D] (0.000)
Fixed value 2 [n]
pxxxx[D]

Fixed torque values

-100 000.00...100 000.00 Nm
p2930[D] (0.00)
Fixed value M [Nm]
p2930[D]

Symbols for logic functions

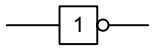

Logical inversion

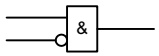

AND element with logical inversion of an input signal

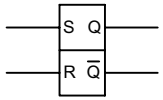

R/S flip-flop

S = setting input
R = reset input
Q = non-inverted output
Q̄ = inverted output

Symbols for computational and closed-loop control functions

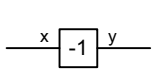

Sign reversal

y = -x

Absolute value generator

y = |x|

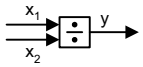

Divider

$y = \frac{x_1}{x_2}$

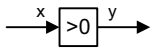

Comparator

Output y = a logical "1", if the analog signal x > 0, i.e. is positive

Symbols for computational and closed-loop control functions

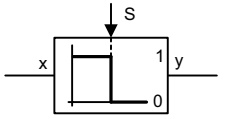

Threshold value switch 1 / 0

Limit value monitor, outputs at y a logical "1" if x < s.

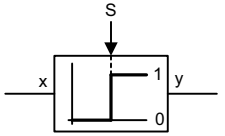

Threshold value switch 0 / 1

Limit value monitor, outputs at y a logical "1" if x > s.

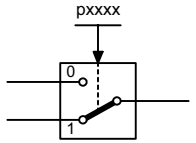

Changeover switch

The switch position acc. to factory setting is shown.
(In this case, switch position 1 in the state when supplied.)

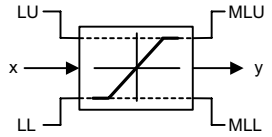

Limiter

x is limited to the upper limit LU and the lower limit LL and output at y.
The digital signals MLU and MLL have the value "1", if the upper or lower limit is active.

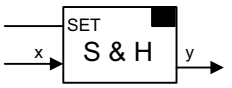

Sample & Hold element

Sampling and hold element.
y = x if SET = 1
(this is not retentively saved at POWER OFF)

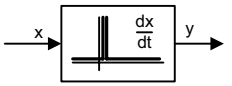

Differentiator

$y = \frac{dx}{dt}$

Symbol for monitoring

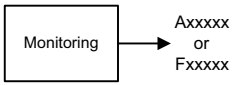

Monitoring

Located at the lower right in the Sheet.

1	2	3	4	5	6	7	8
DO: All objects					fp_1021_01_eng.vsd	Function diagram	- 1021 -
General - explanation of the symbols (part 2)					28.04.05 V02.03.00	SINAMICS S	

Figure 2-2 1021 – Explanation of the symbols (part 2)

© Siemens AG, 2005. All rights reserved
SINAMICS S List Manual, Edition 06.2005

Switch-on delay

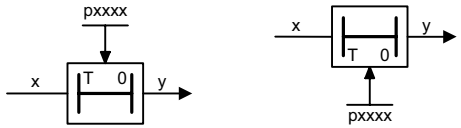

The digital signal x must have the value "1" without any interruption during time T before output y changes to "1".

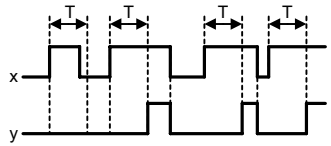

Switch-out delay

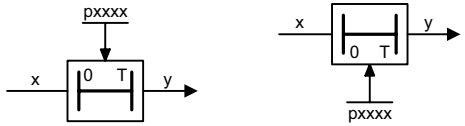

The digital signal x must have the value "0" without interruption during time T before output y changes to "1".

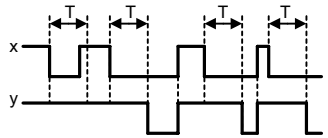

Delay (switch-in and switch-out)

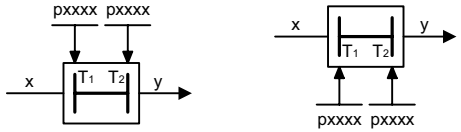

The digital signal x must have the value "1" without interruption during time T1 or must have the value "0" during time T2 before output y changes its signal state.

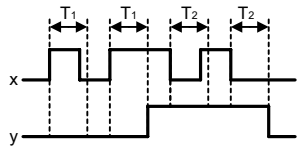

PT1 element

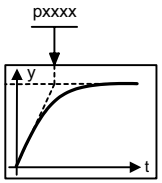

Delay element, first Order.

pxxxx = time constant

PT2 lowpass

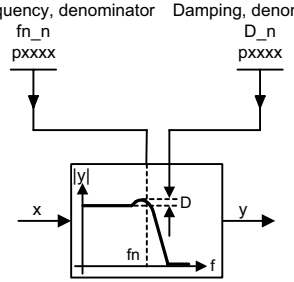

Transfer function

$$H(s) = \frac{1}{\left(\frac{s}{2\pi fn\_n}\right)^2 + \frac{2 \cdot D\_n}{2\pi fn\_n} \cdot s + 1}$$

2nd Order filter (bandstop/general filter)

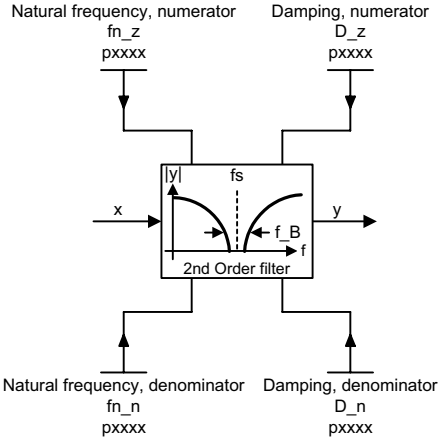

Used as bandstop filter

- center frequency fs: fn_z = fs
  fn_n = fs

- bandwidth f_B: D_z = 0

$$D\_n = \frac{f\_B}{2 \bullet fs}$$

Transfer function when used as general filter

$$H(s) = \frac{\left(\frac{s}{2\pi fn\_z}\right)^2 + \frac{2 \cdot D\_z}{2\pi fn\_z} \cdot s + 1}{\left(\frac{s}{2\pi fn\_n}\right)^2 + \frac{2 \cdot D\_n}{2\pi fn\_n} \cdot s + 1}$$

1	2	3	4	5	6	7	8
DO: All objects					fp_1024_01_eng.vsd	Function diagram	- 1024 -
General - explanation of the symbols (part 3)					30.03.05 V02.03.00	SINAMICS S	

Figure 2-3 1024 – Explanation of the symbols (part 3)

© Siemens AG, 2005. All rights reserved
SINAMICS S List Manual, Edition 06.2005

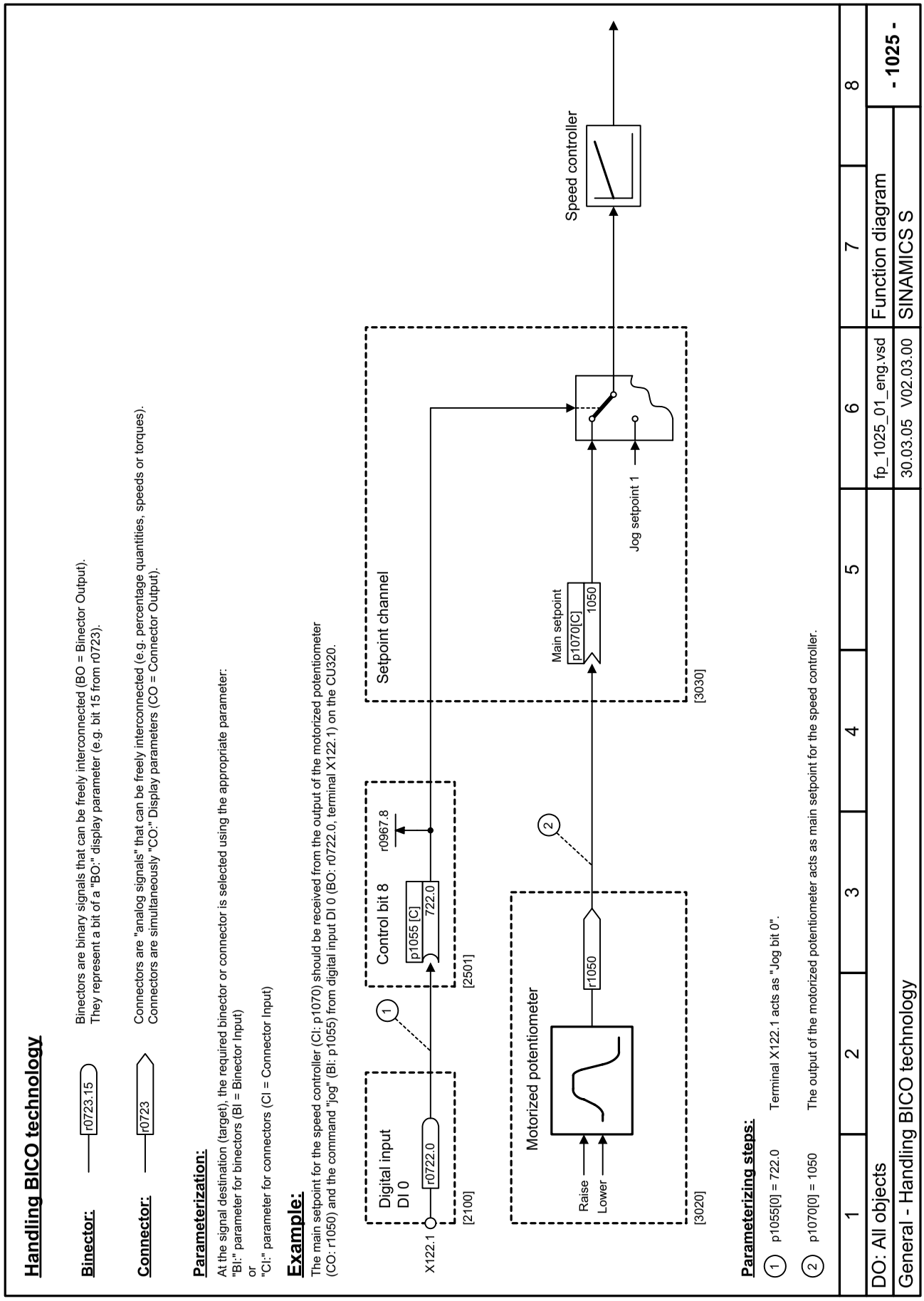

Figure 2-4 1025 – Using BICO technology

© Siemens AG, 2005. All rights reserved

2.3 Overviews

Function diagrams

1510 – CU320 input/output terminals	2-725
1512 – CX32 input/output terminals	2-726
1520 – PROFIBUS	2-727
1530 – Internal control/status words	2-728
1550 – Setpoint channel	2-729
1580 – Servo encoder evaluations (position, speed, temperature)	2-730
1590 – Servo speed control and V/f control	2-731
1610 – Servo generation of the torque limits	2-732
1630 – Servo current control	2-733
1680 – VECTOR encoder evaluations (position, speed, temperature)	2-734
1690 – VECTOR V/f control	2-735
1700 – VECTOR speed control and generation of the torque limits	2-736
1710 – VECTOR current control	2-737
1750 – Monitoring, faults, alarms	2-738
1773 – Basic Infeed	2-739
1774 – Active Infeed	2-740
1775 – Smart Infeed	2-741
1790 – Terminal Board 30 (TB30)	2-742
1840 – Terminal Module 31 (TM31)	2-743

© Siemens AG, 2005. All rights reserved

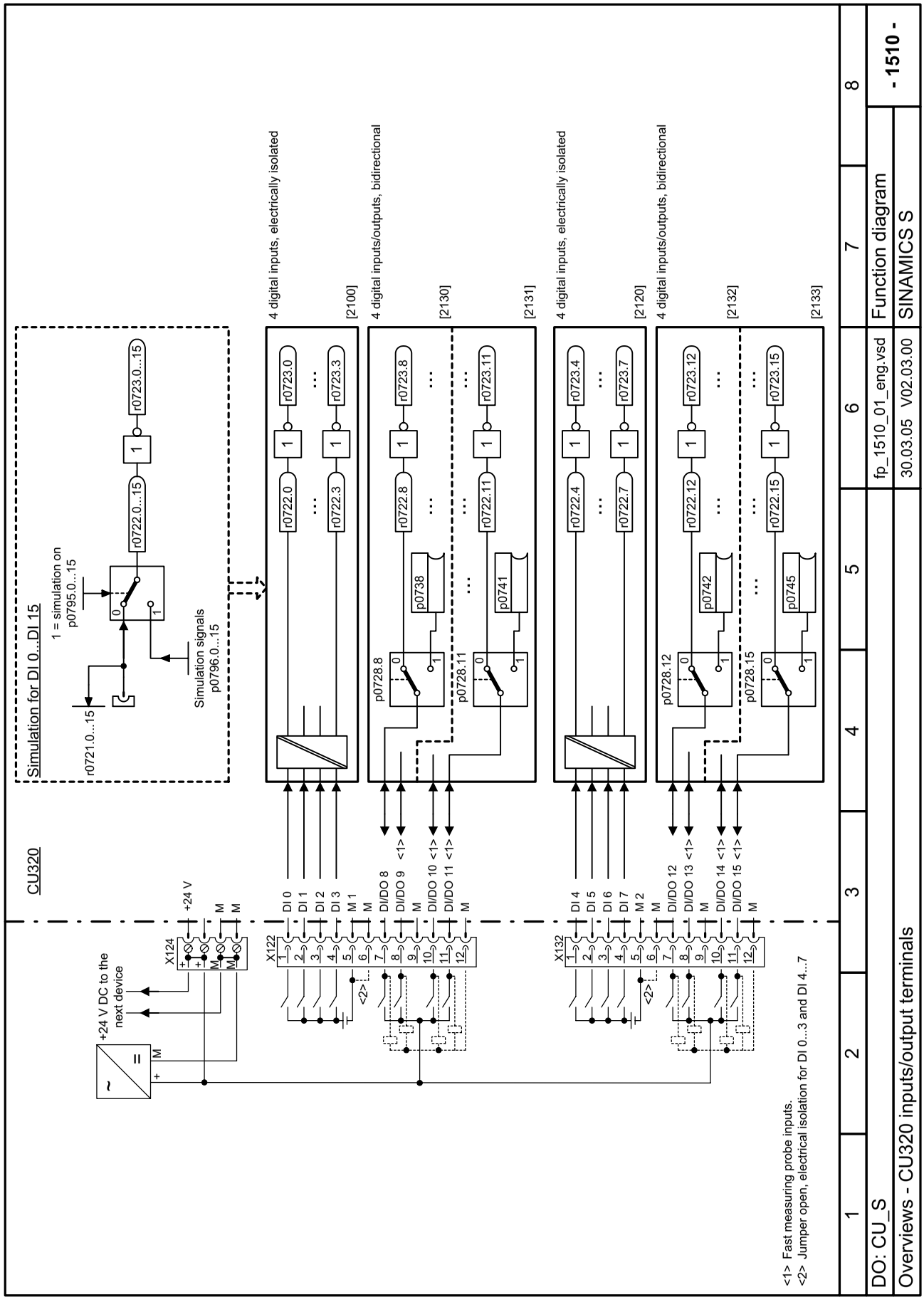

Figure 2-5 1510 – CU320 input/output terminals

© Siemens AG, 2005. All rights reserved

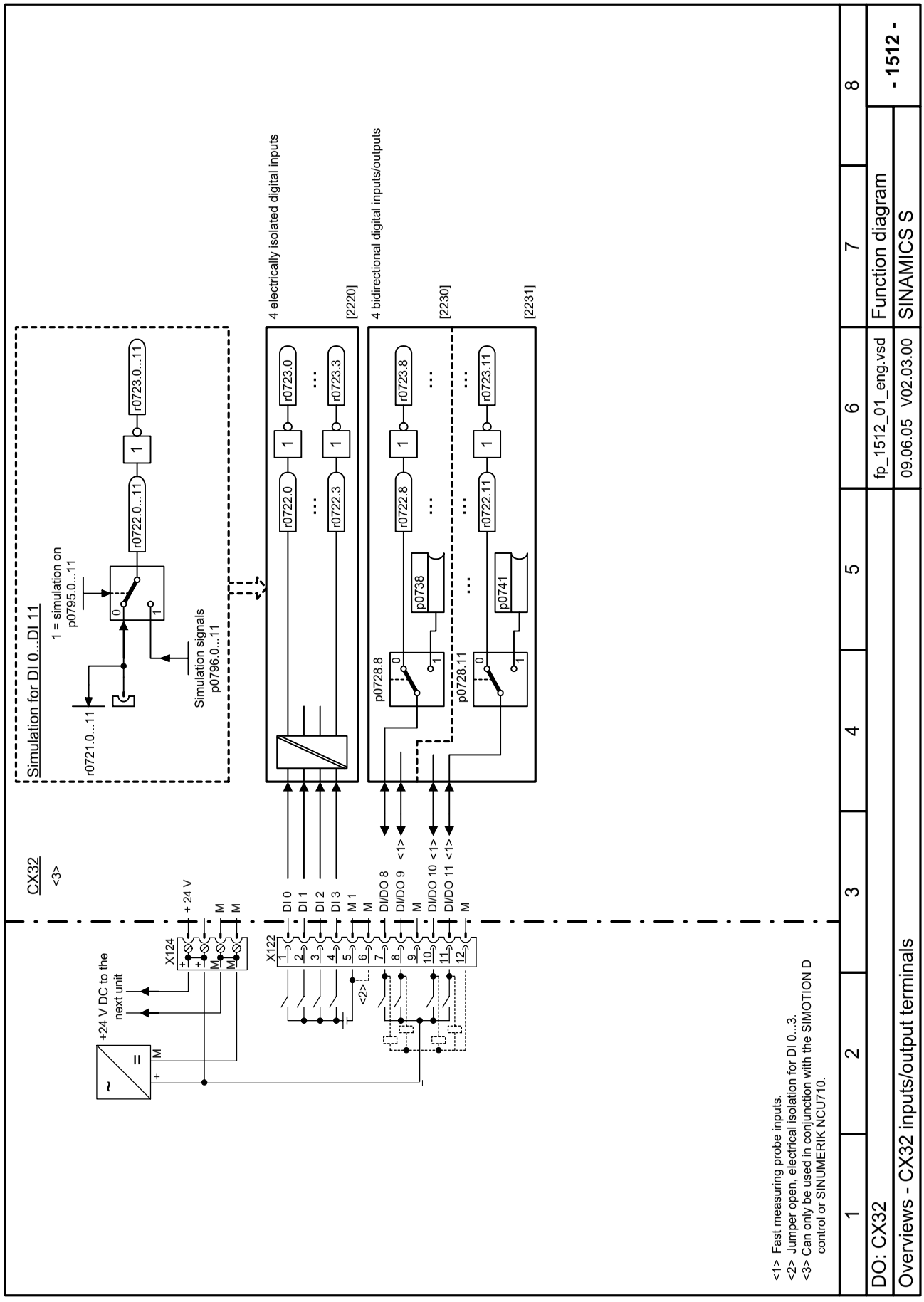

Figure 2-6 1512 – CX32 input/output terminals

© Siemens AG, 2005. All rights reserved
SINAMICS S List Manual, Edition 06.2005

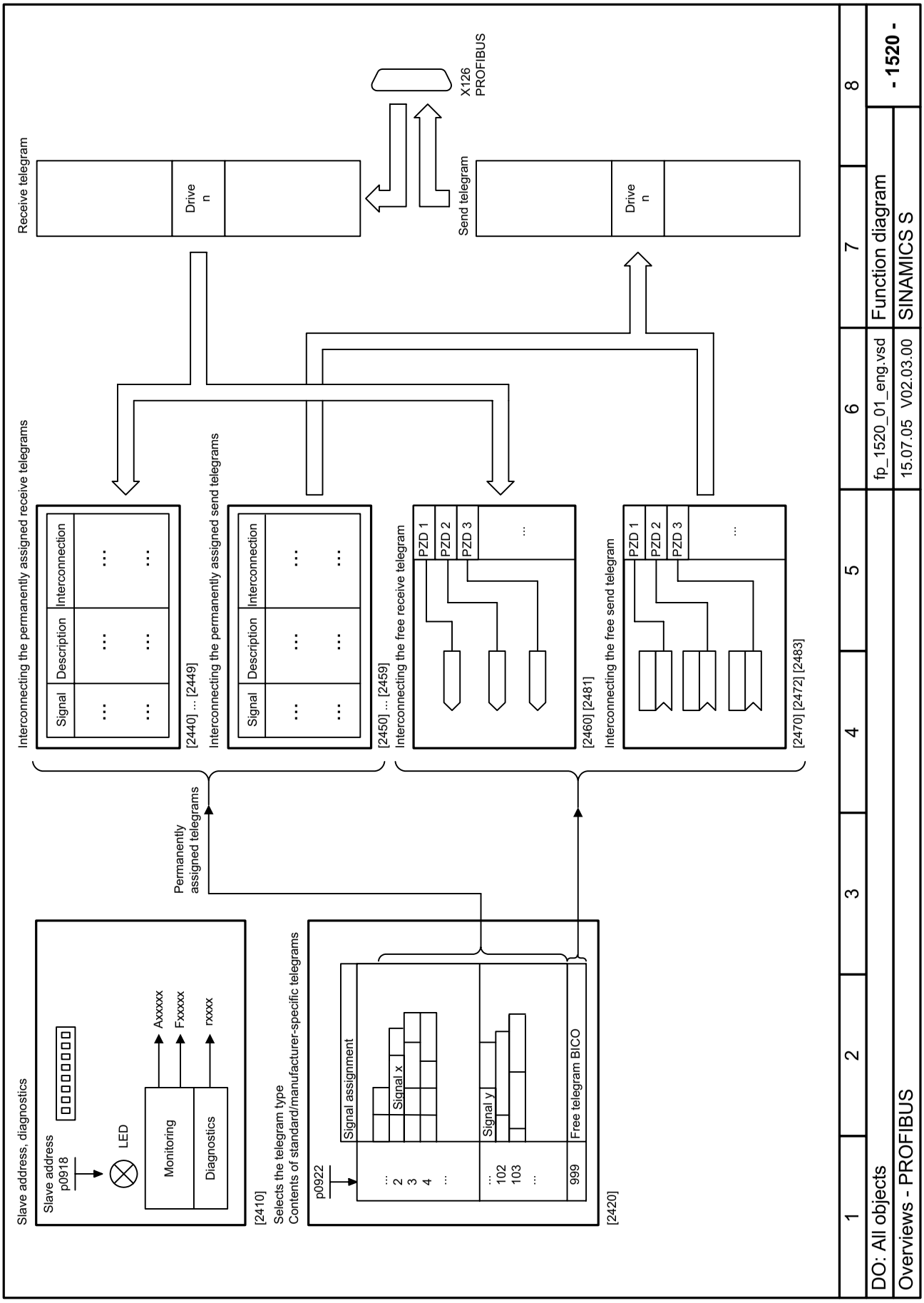

Figure 2-7 1520 – PROFIBUS

© Siemens AG, 2005. All rights reserved

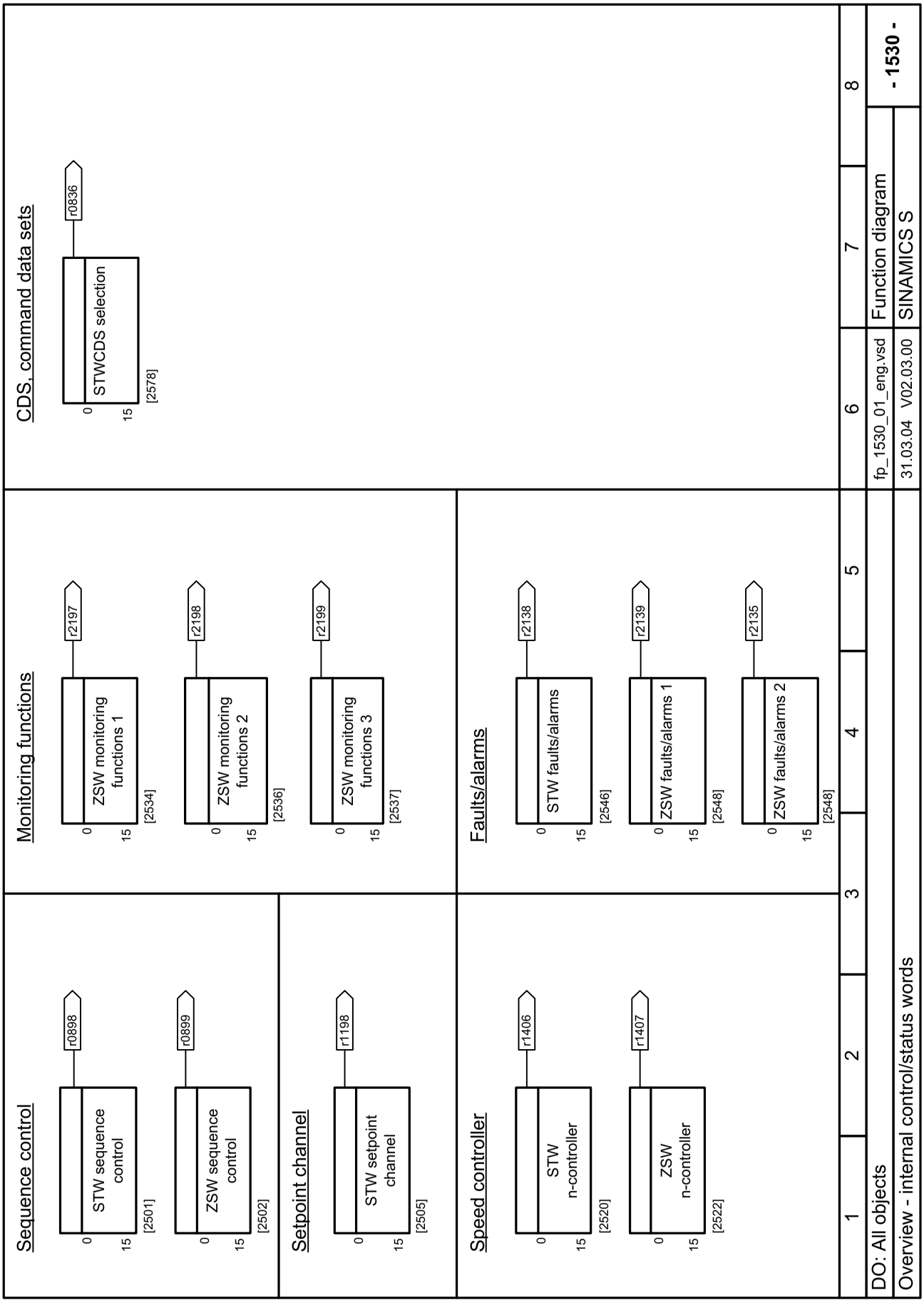

Figure 2-8 1530 – Internal control/status words

© Siemens AG, 2005. All rights reserved
SINAMICS S List Manual, Edition 06.2005

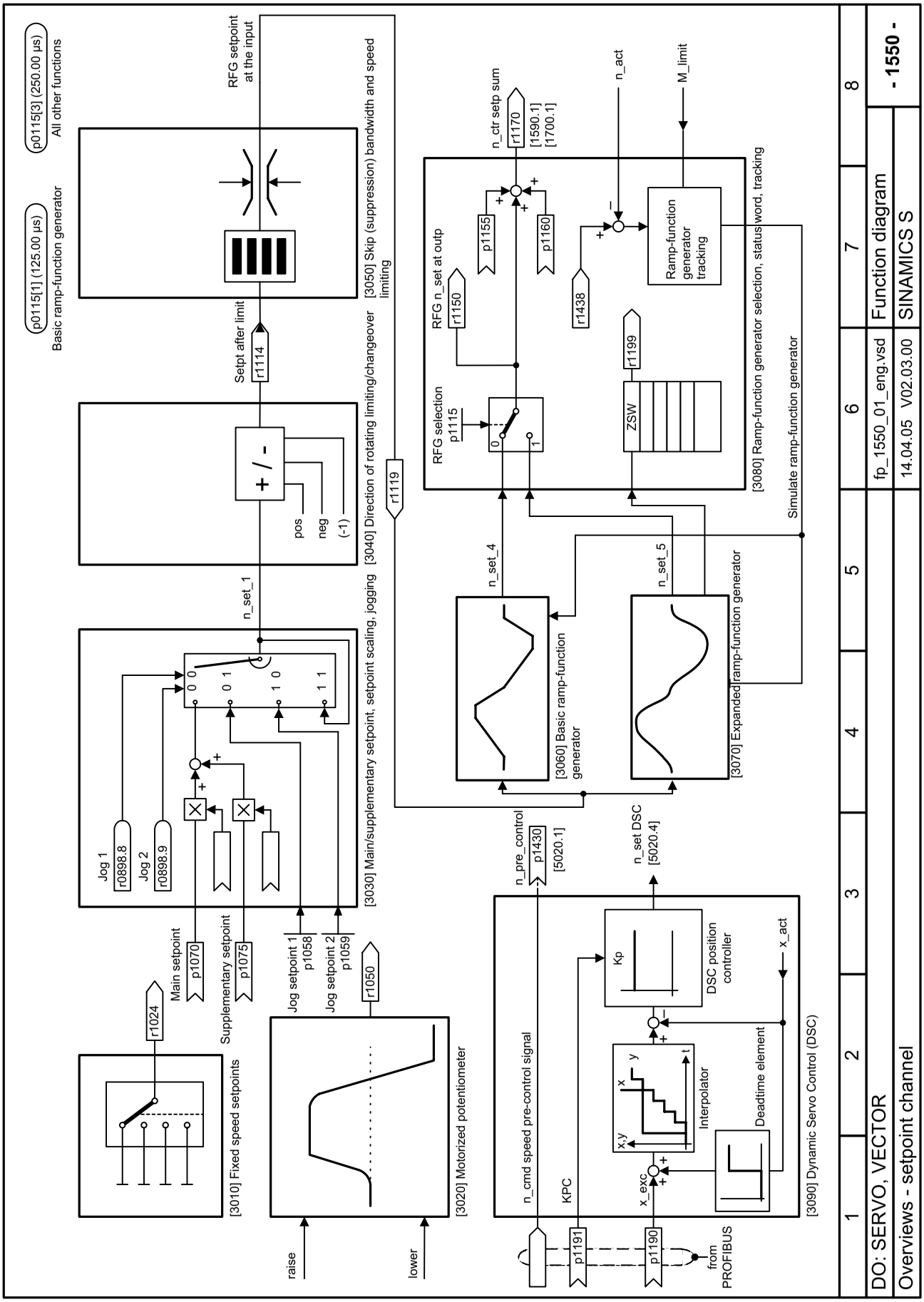

Figure 2-9 1550 – Setpoint channel

© Siemens AG, 2005. All rights reserved

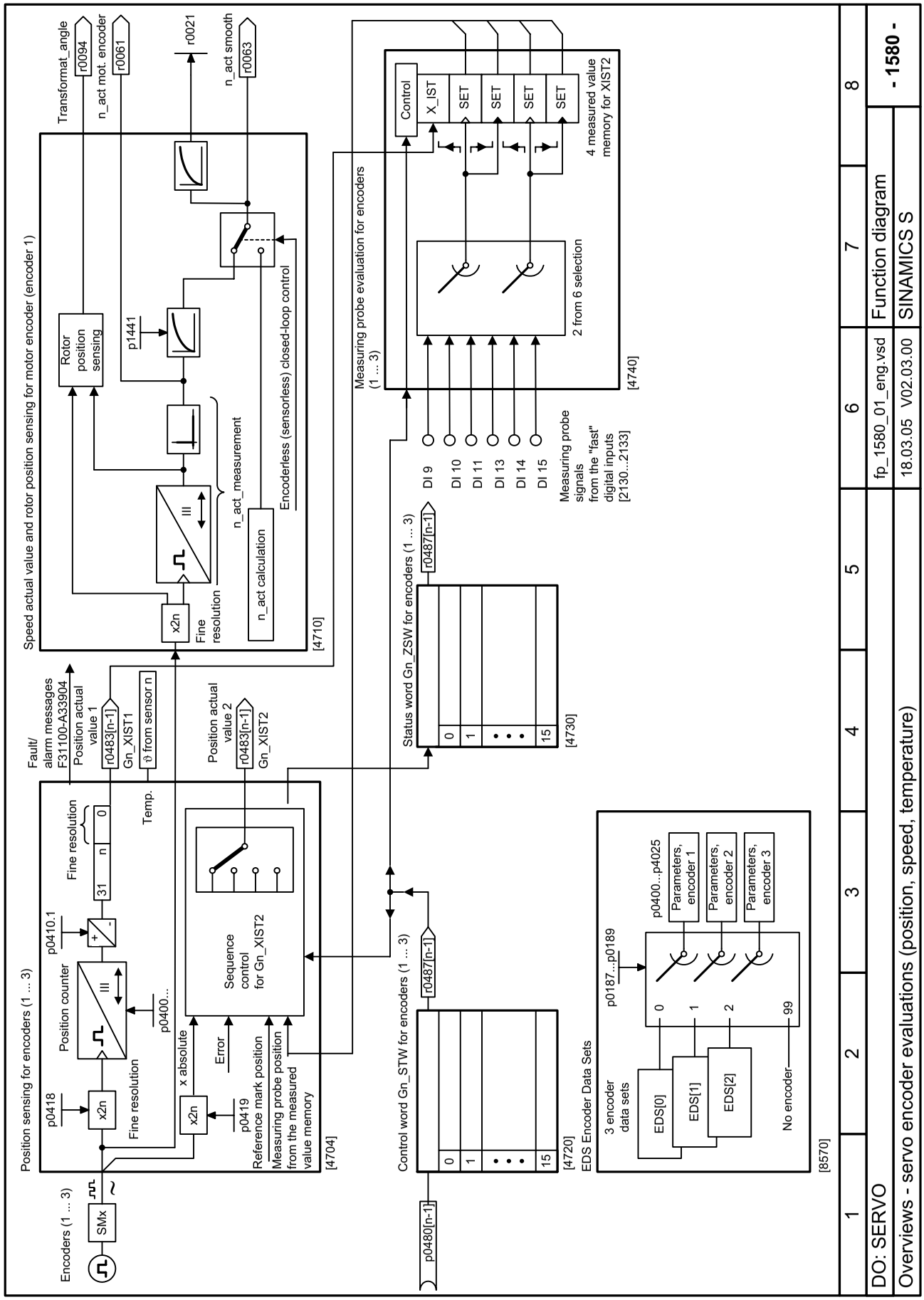

Figure 2-10 1580 – Servo encoder evaluations (position, speed, temperature)

© Siemens AG, 2005. All rights reserved

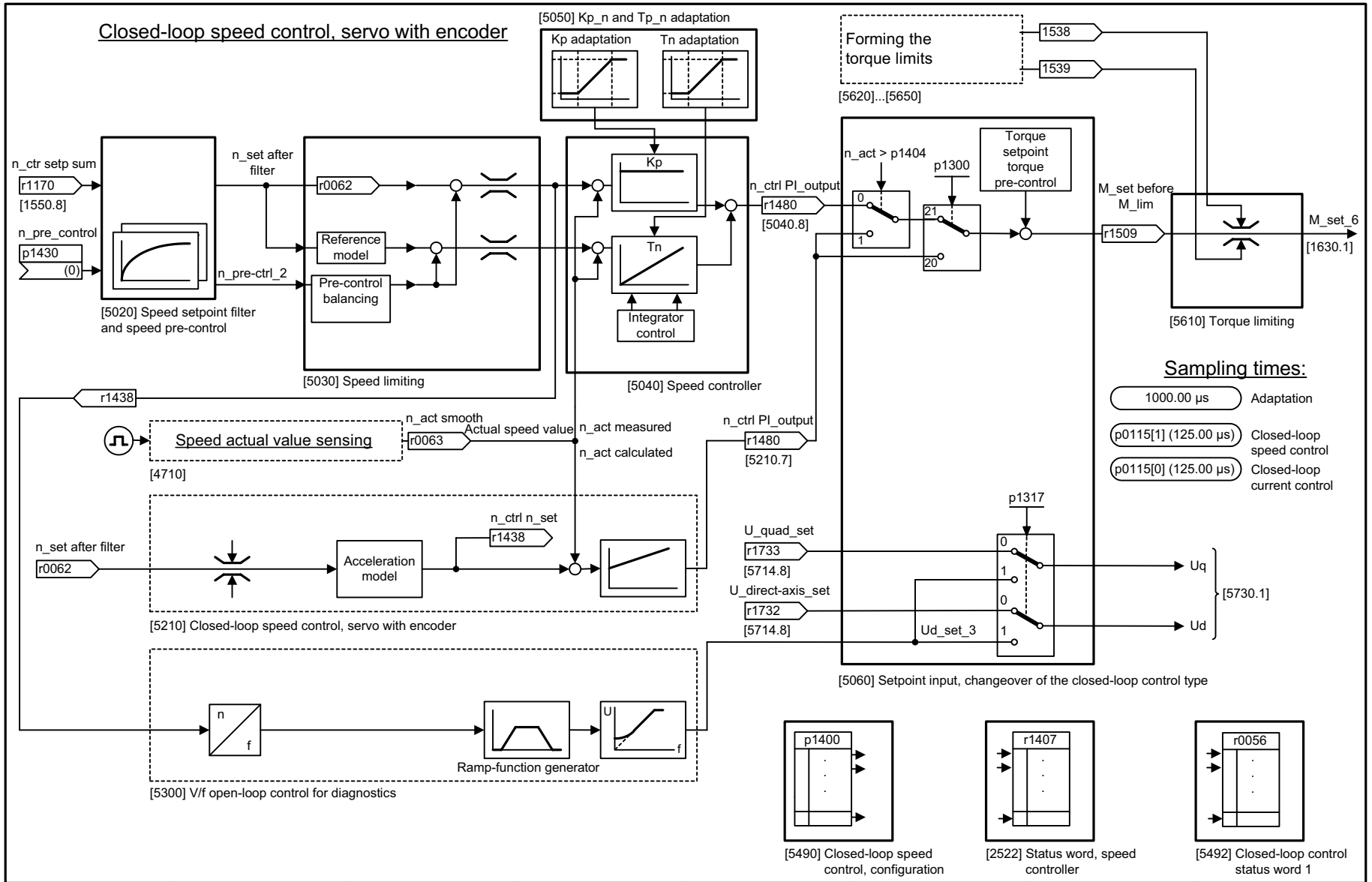

1	2	3	4	5	6	7	8
DO: SERVO					fp_1590_01_eng.vsd	Function diagram	- 1590 -
Overview - servo closed-loop speed control and V/f open-loop control					12.07.05 V02.03.00	SINAMICS S	

Figure 2-11 1590 – Servo speed control and V/f control

© Siemens AG, 2005. All rights reserved
SINAMICS S List Manual, Edition 06.2005

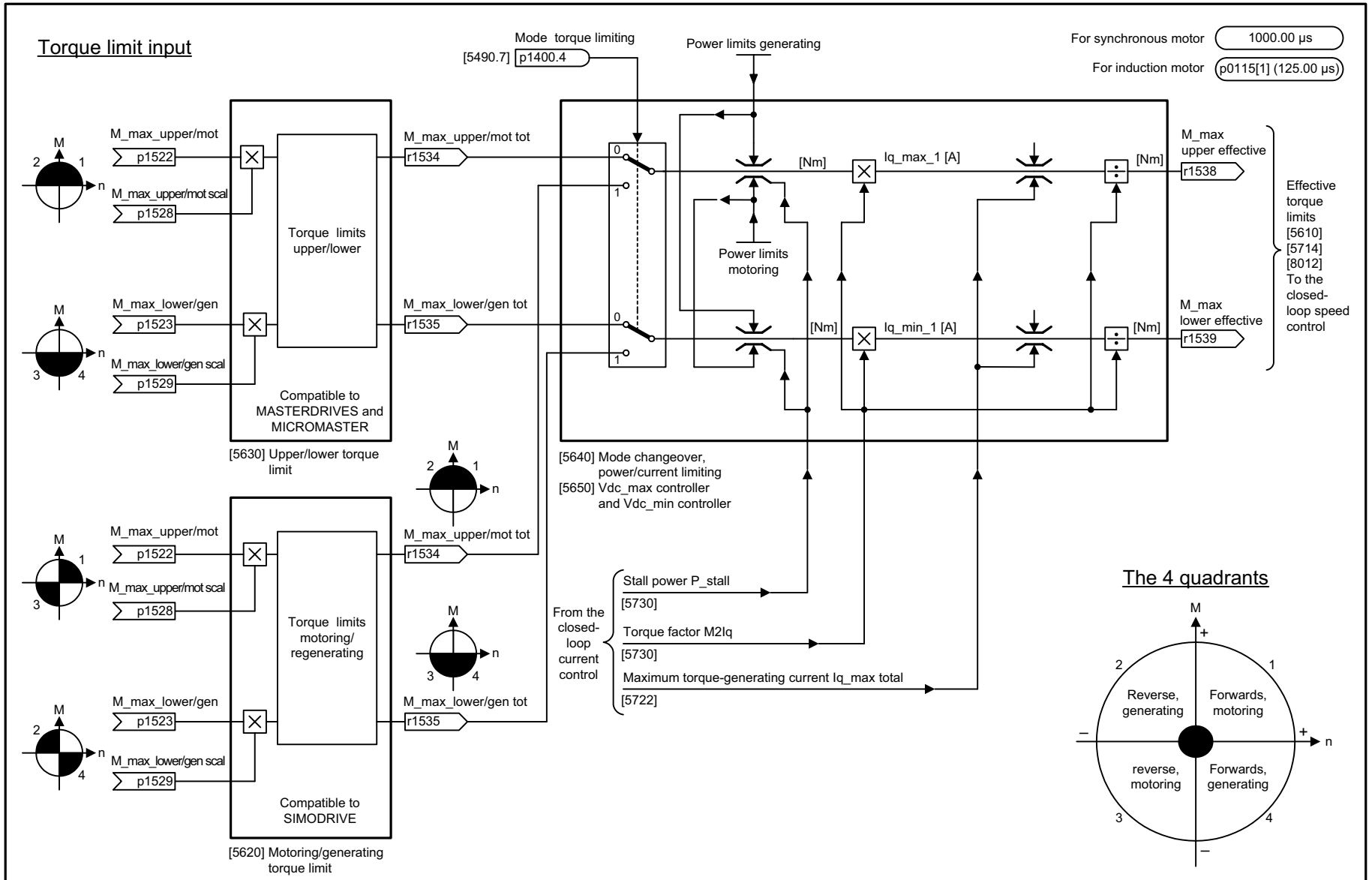

Figure 2-12 1610 – Servo generation of the torque limits

1	2	3	4	5	6	7	8
DO: SERVO					fp_1610_01_eng.vsd	Function diagram	- 1610 -
Overview - servo forming the torque limits					22.07.05 V02.03.00	SINAMICS S	

© Siemens AG, 2005. All rights reserved
SINAMICS S List Manual, Edition 06.2005

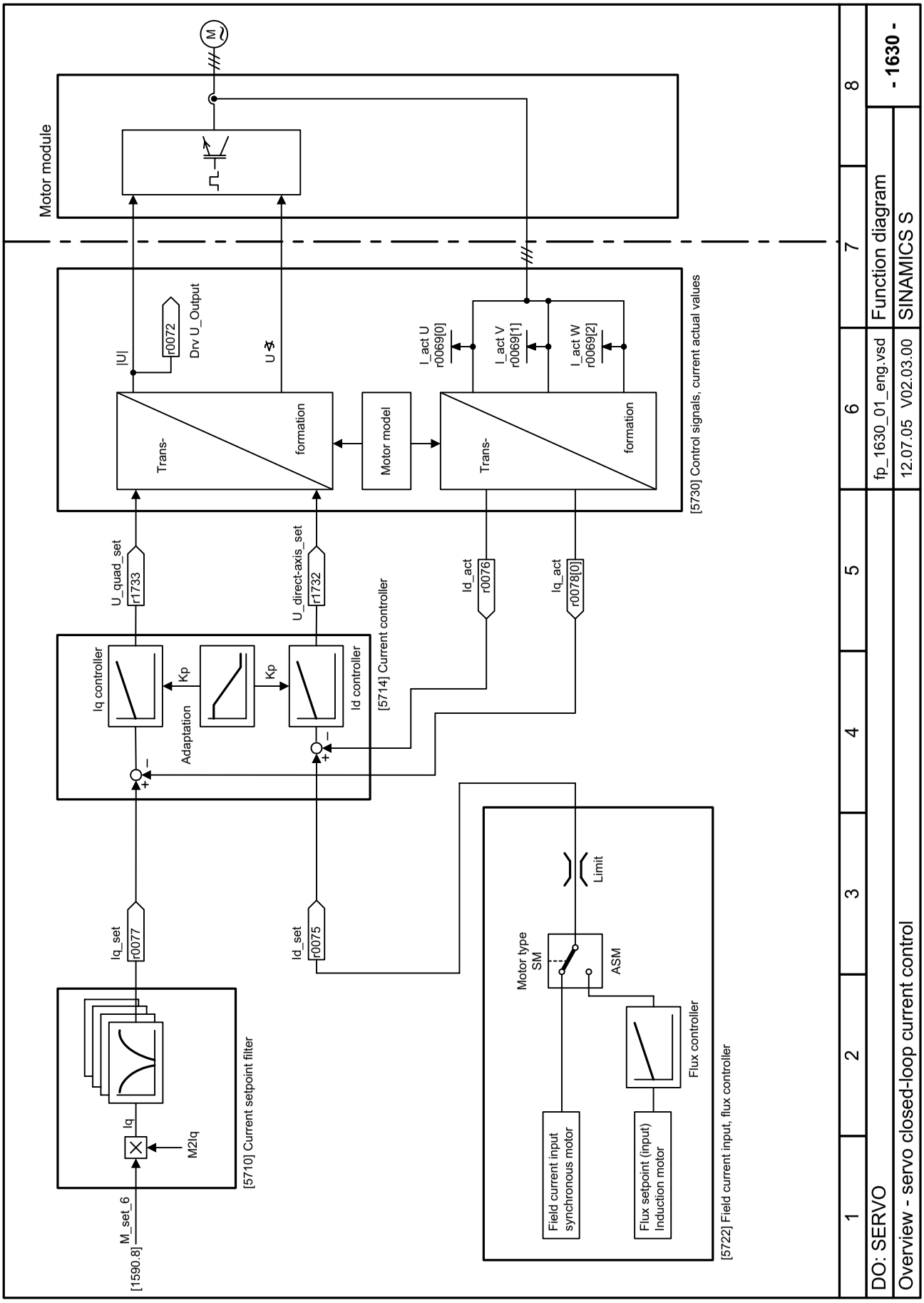

Figure 2-13 1630 – Servo current control

© Siemens AG, 2005. All rights reserved

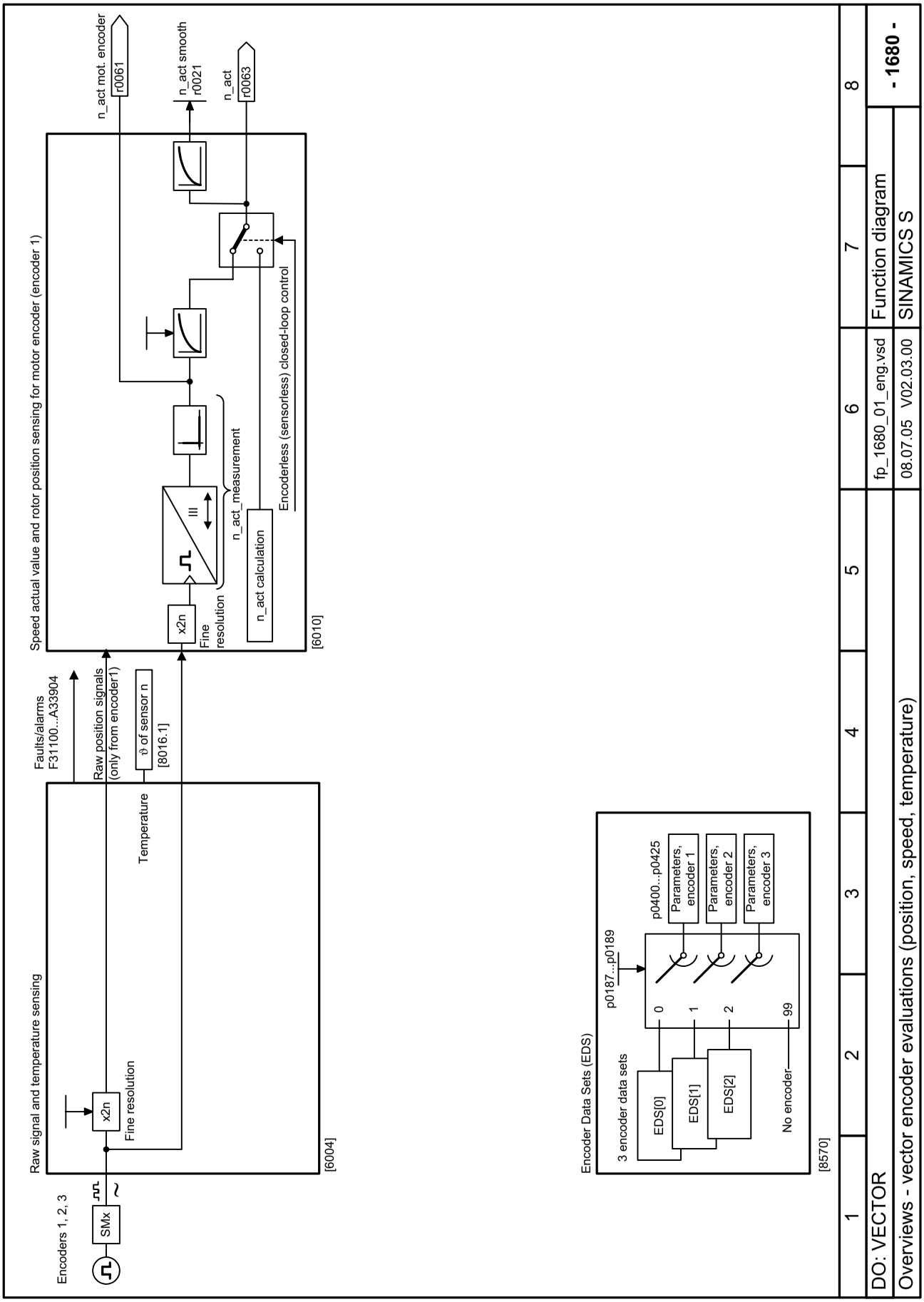

Figure 2-14 1680 – VECTOR encoder evaluations (position, speed, temperature)

© Siemens AG, 2005. All rights reserved

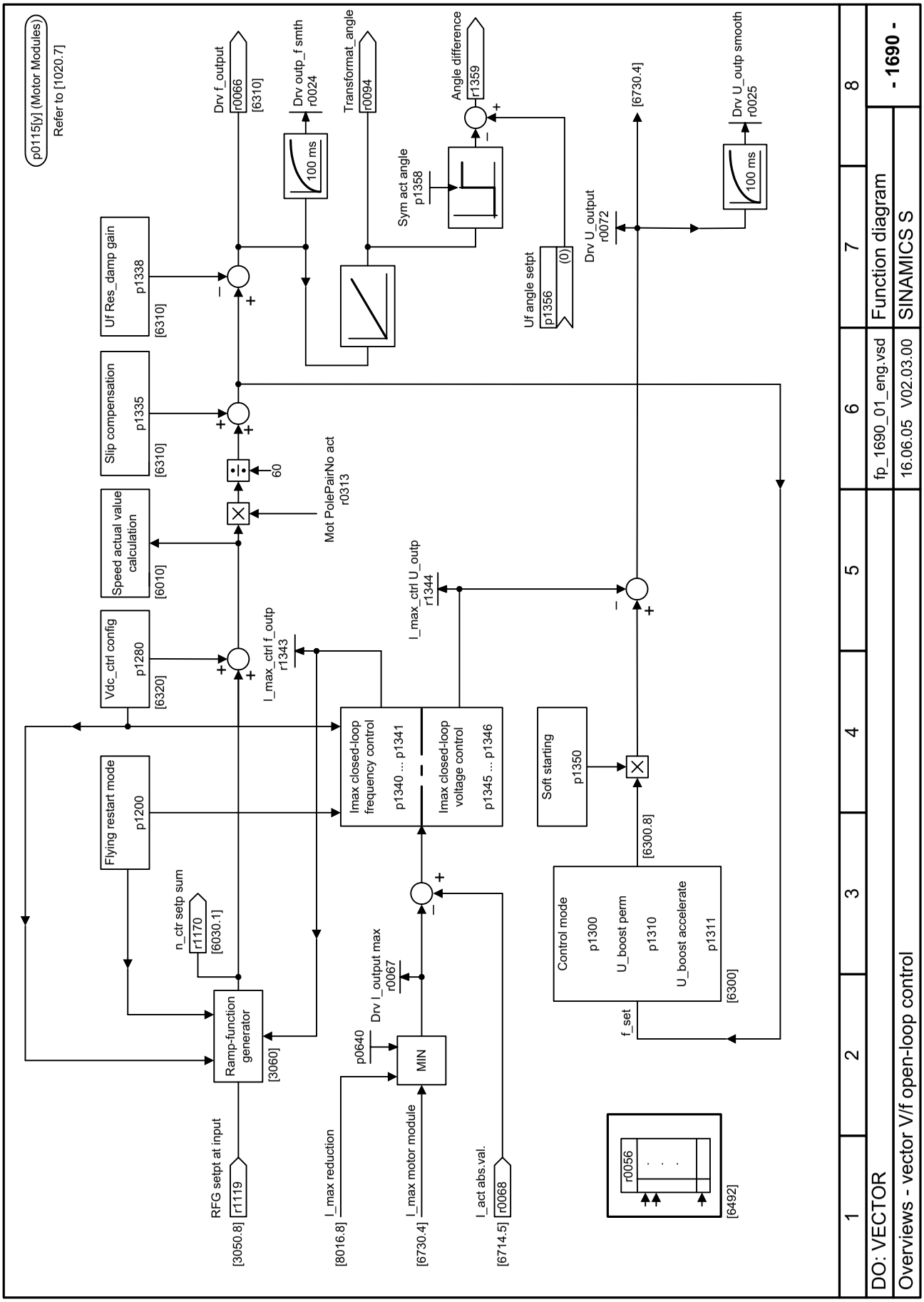

Figure 2-15 1690 – VECTOR V/f control

© Siemens AG, 2005. All rights reserved

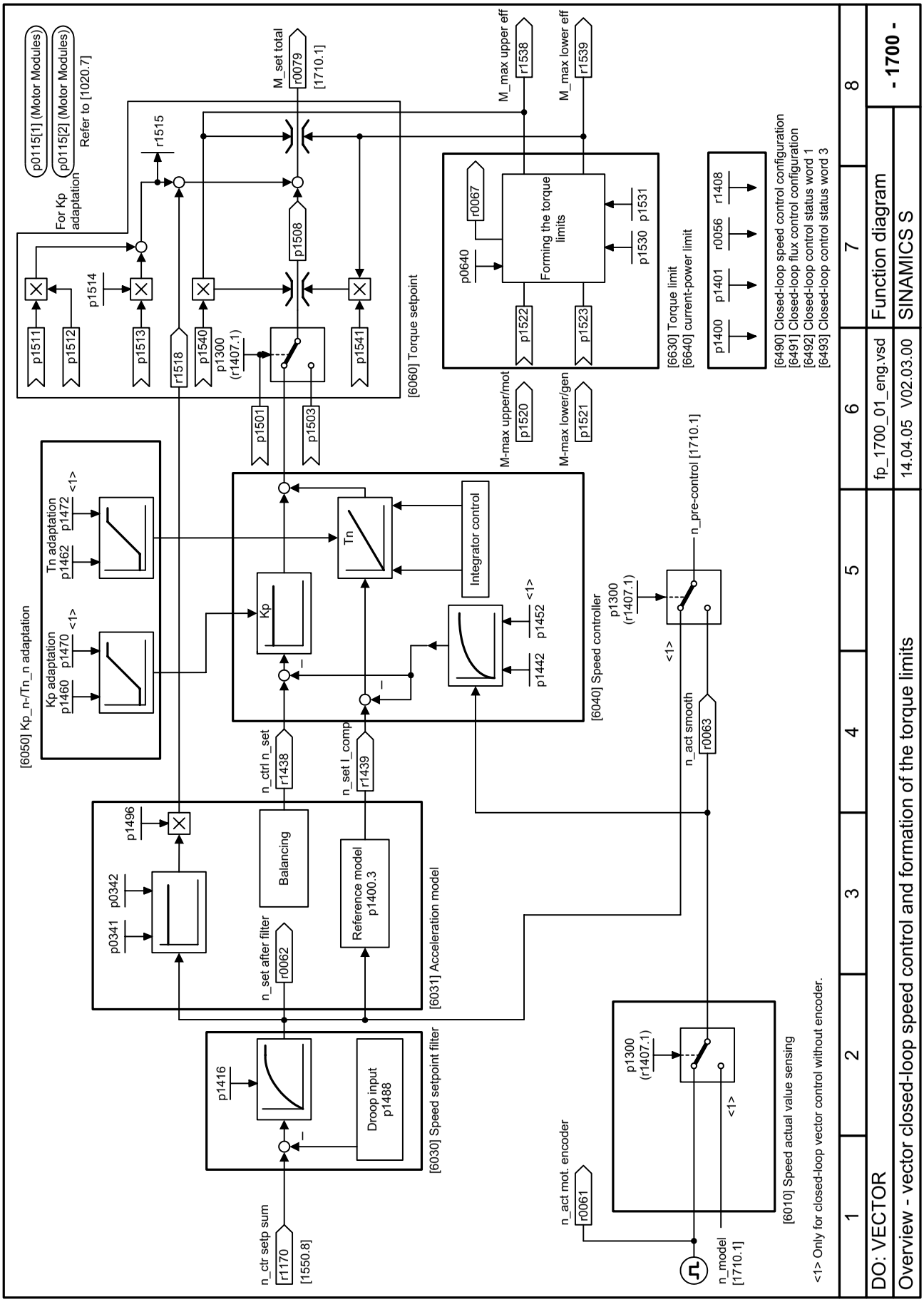

Figure 2-16 1700 – VECTOR speed control and generation of the torque limits

© Siemens AG, 2005. All rights reserved

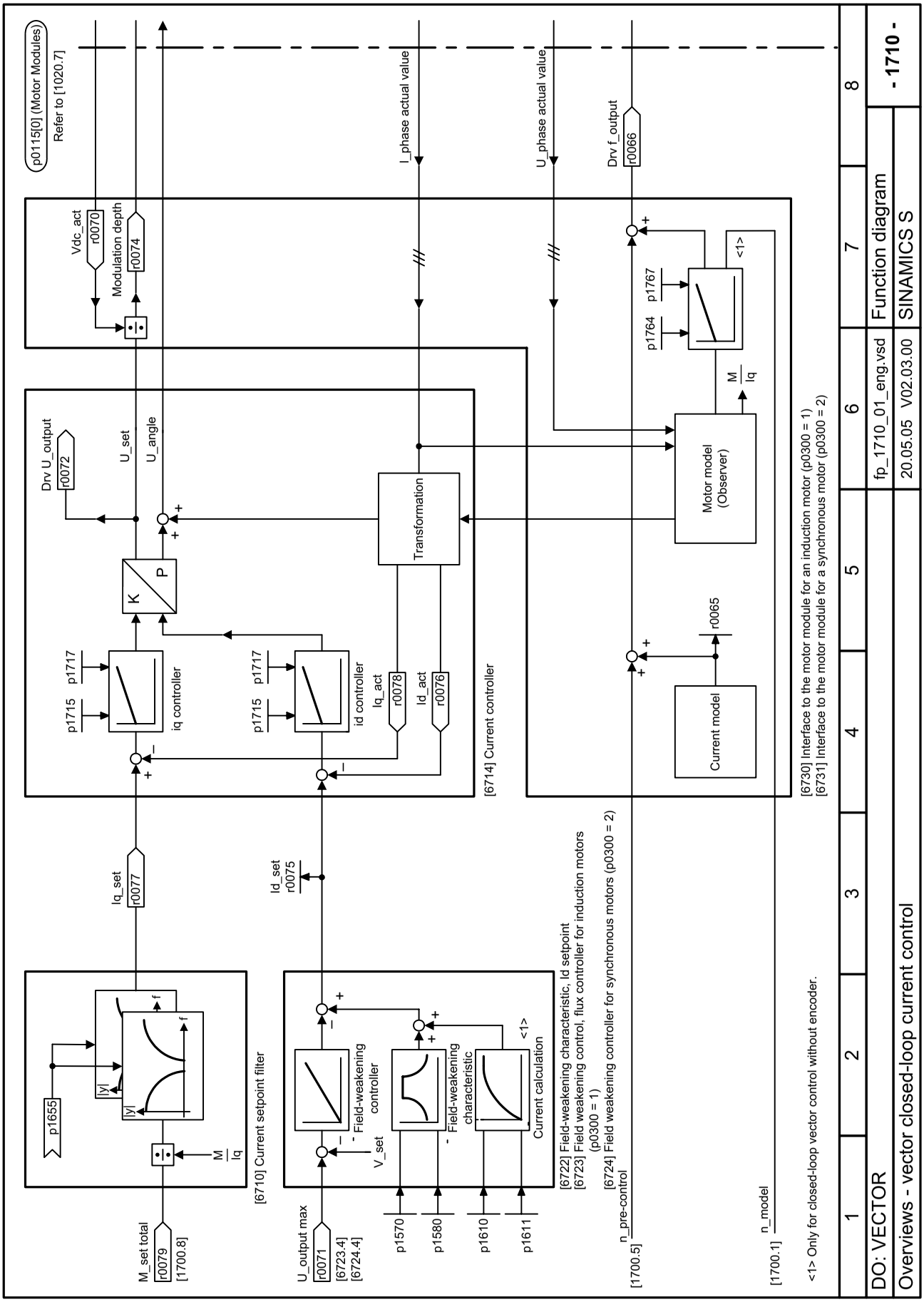

Figure 2-17 1710 – VECTOR current control

© Siemens AG, 2005. All rights reserved

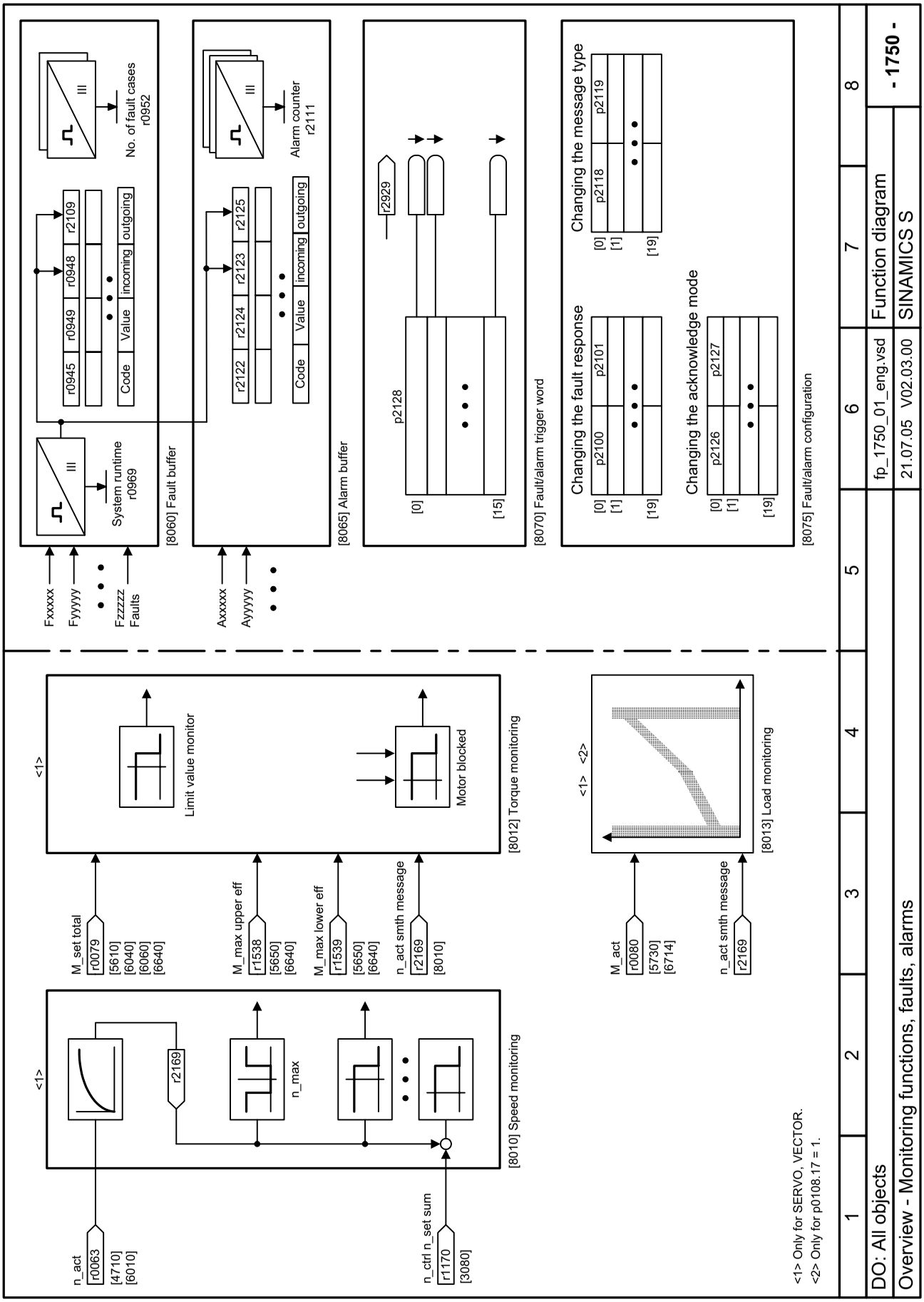

Figure 2-18 1750 – Monitoring, faults, alarms

© Siemens AG, 2005. All rights reserved

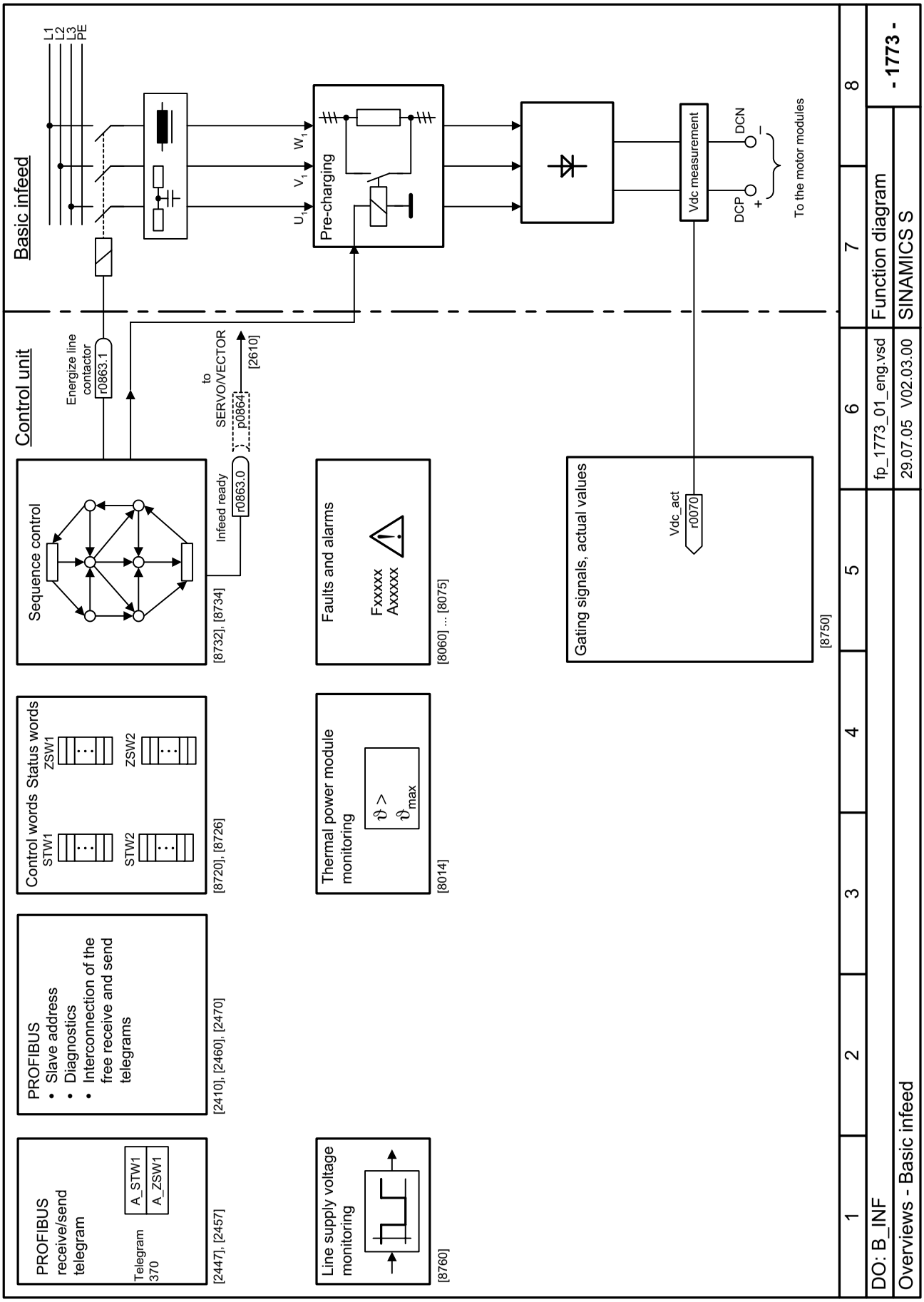

Figure 2-19 1773 – Basic Infeed

© Siemens AG, 2005. All rights reserved

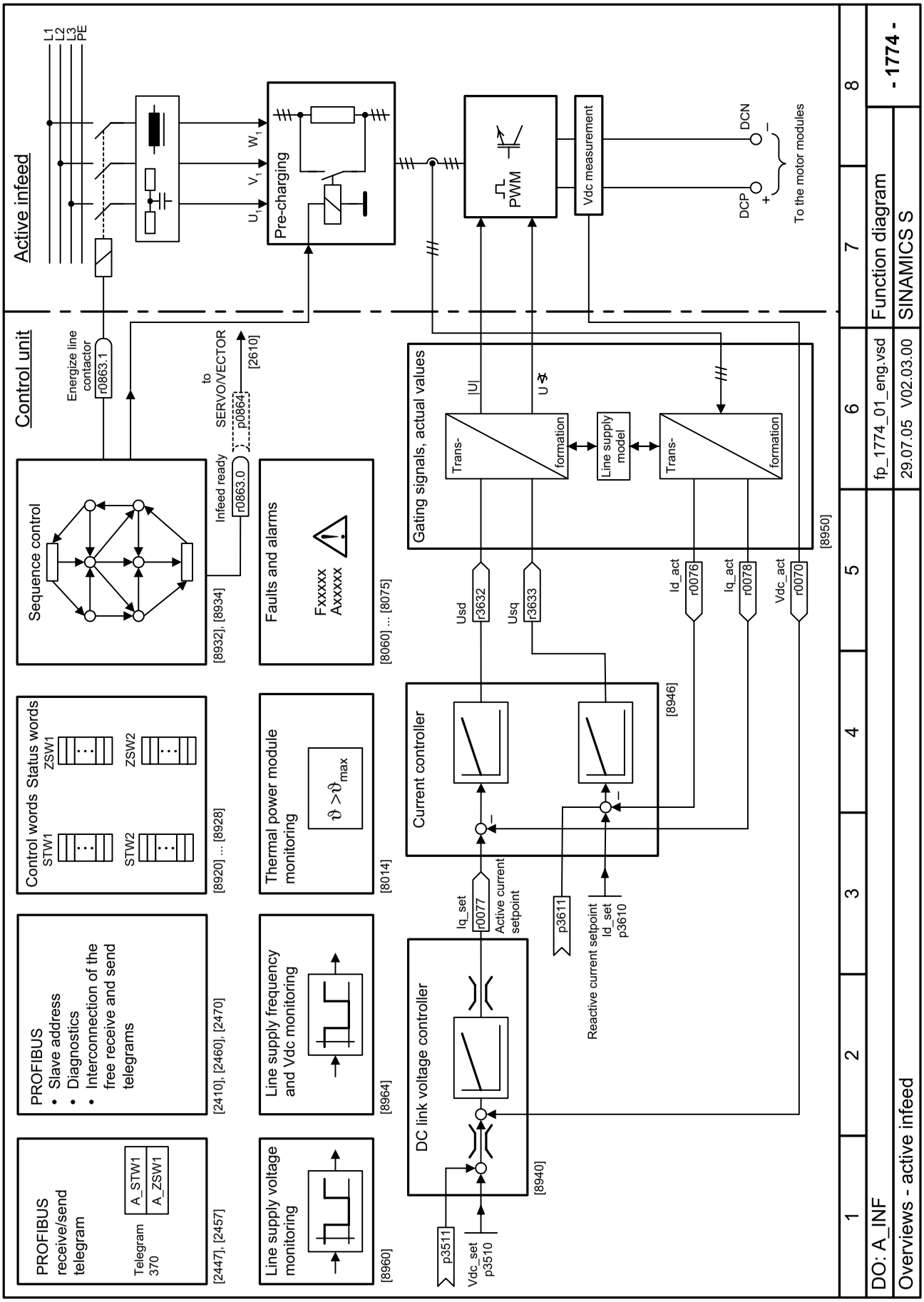

Figure 2-20 1774 – Active Infeed

© Siemens AG, 2005. All rights reserved
SINAMICS S List Manual, Edition 06.2005

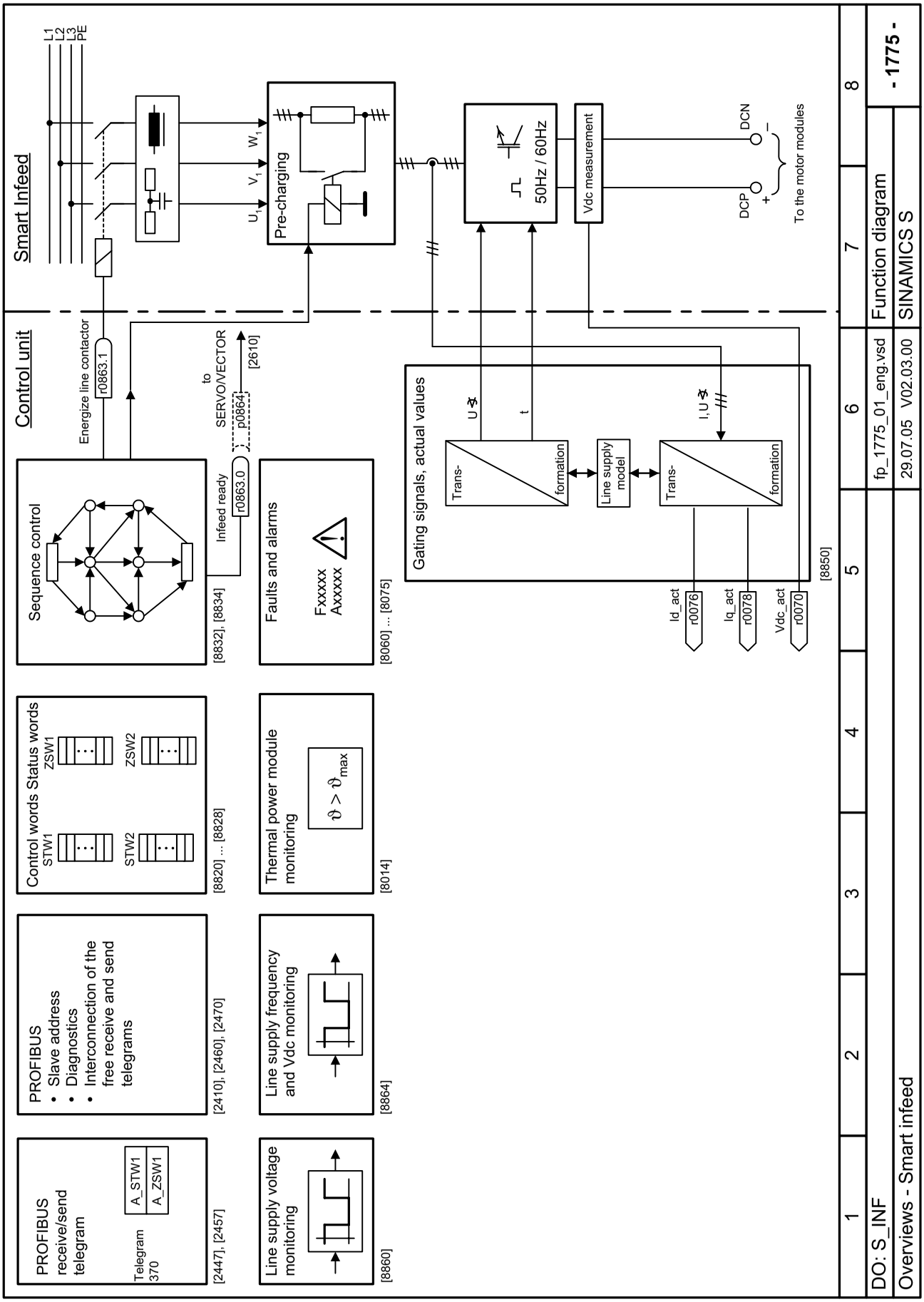

Figure 2-21 1775 – Smart Infeed

© Siemens AG, 2005. All rights reserved

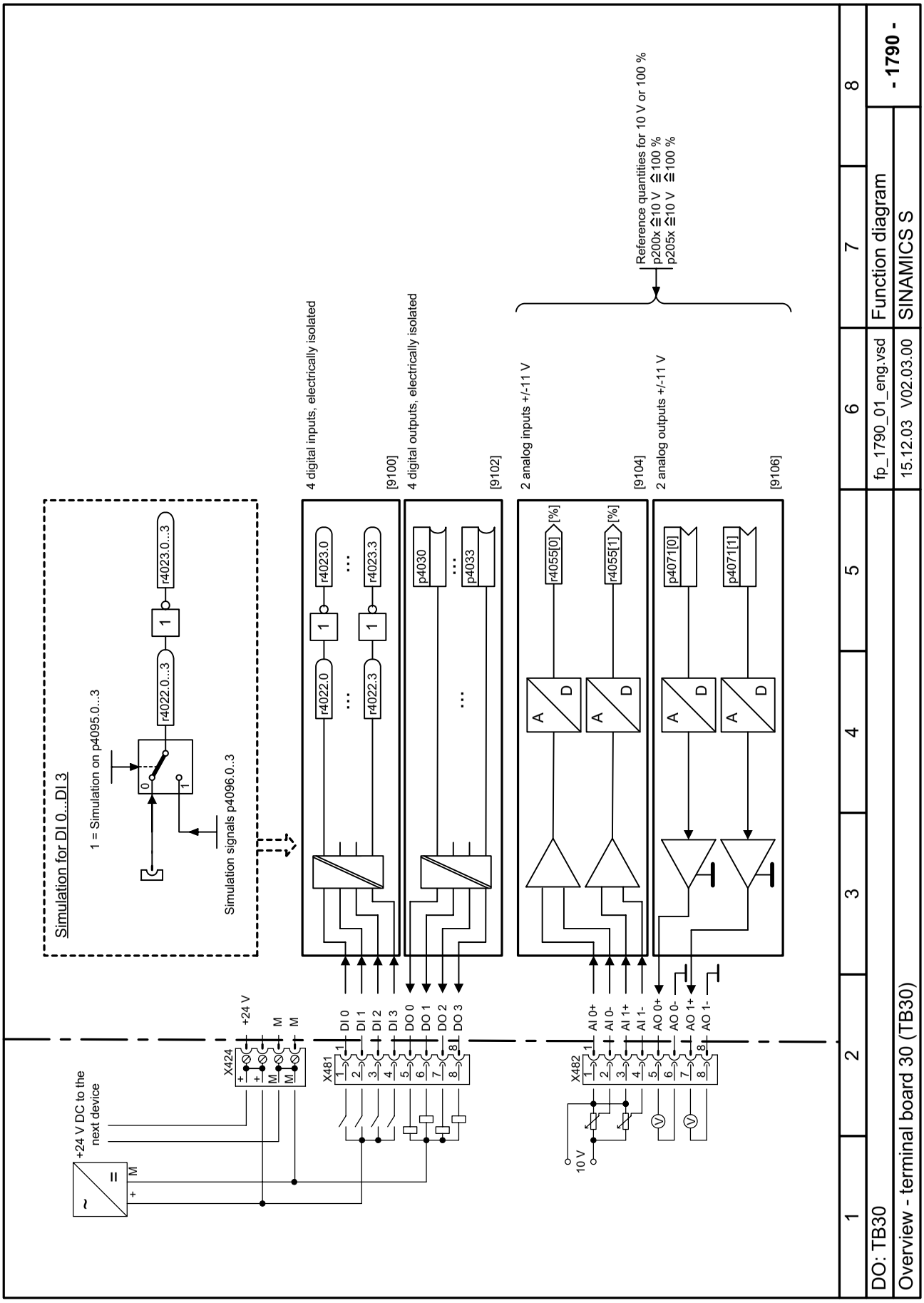

Figure 2-22 1790 – Terminal Board 30 (TB30)

© Siemens AG, 2005. All rights reserved
SINAMICS S List Manual, Edition 06.2005

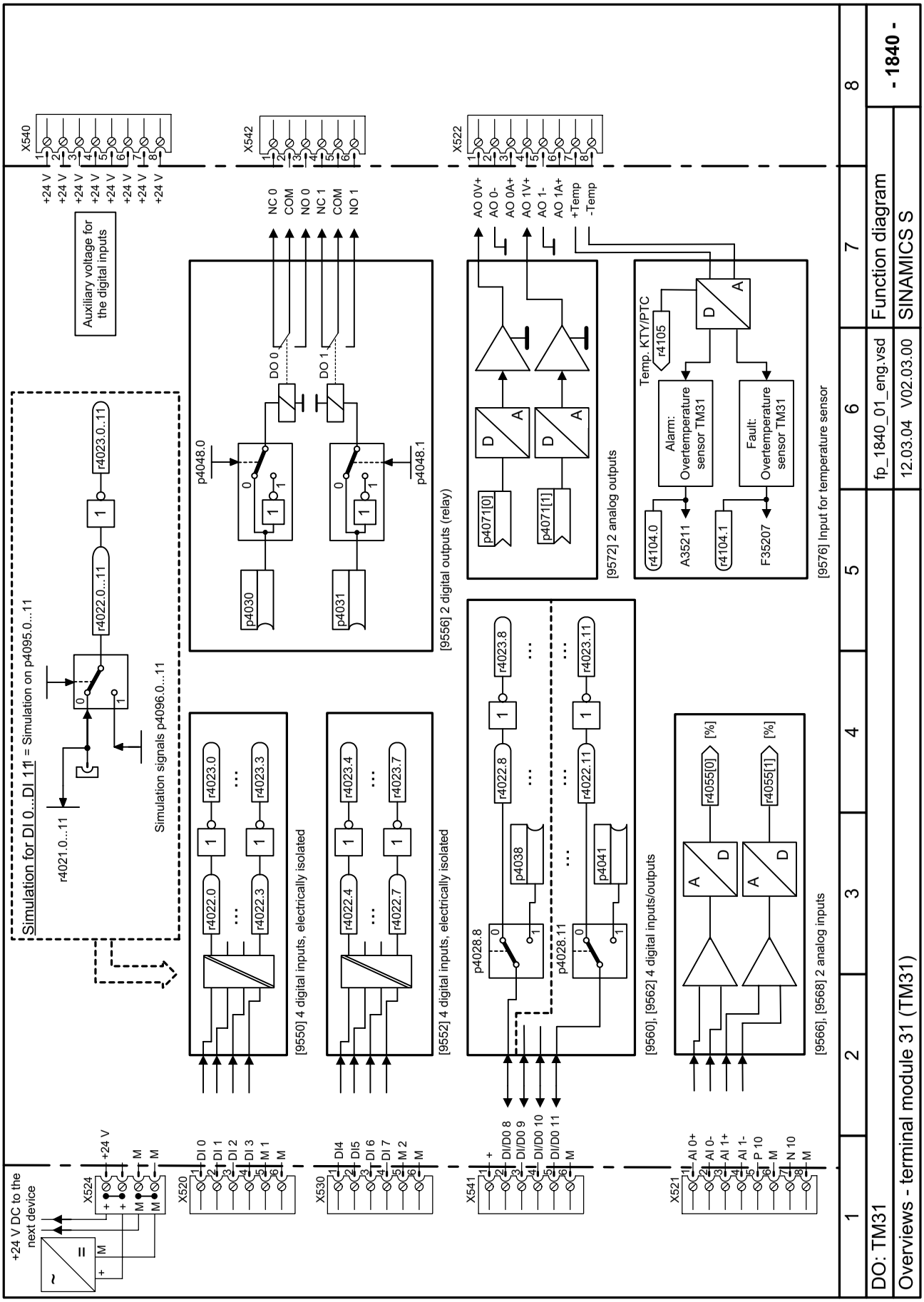

Figure 2-23 1840 – Terminal Module 31 (TM31)

© Siemens AG, 2005. All rights reserved

2.4 CU320 input/output terminals

Function diagrams

2100 – Digital inputs, electrically isolated (DI 0 ... DI 3)	2-745
2120 – Digital inputs, electrically isolated (DI 4 ... DI 7)	2-746
2130 – Digital inputs/outputs, bi-directional (DI/DO 8 ... DI/DO 9)	2-747
2131 – Digital inputs/outputs, bi-directional (DI/DO 10 ... DI/DO 11)	2-748
2132 – Digital inputs/outputs, bi-directional (DI/DO 12 ... DI/DO 13)	2-749
2133 – Digital inputs/outputs, bi-directional (DI/DO 14 ... DI/DO 15)	2-750

© Siemens AG, 2005. All rights reserved

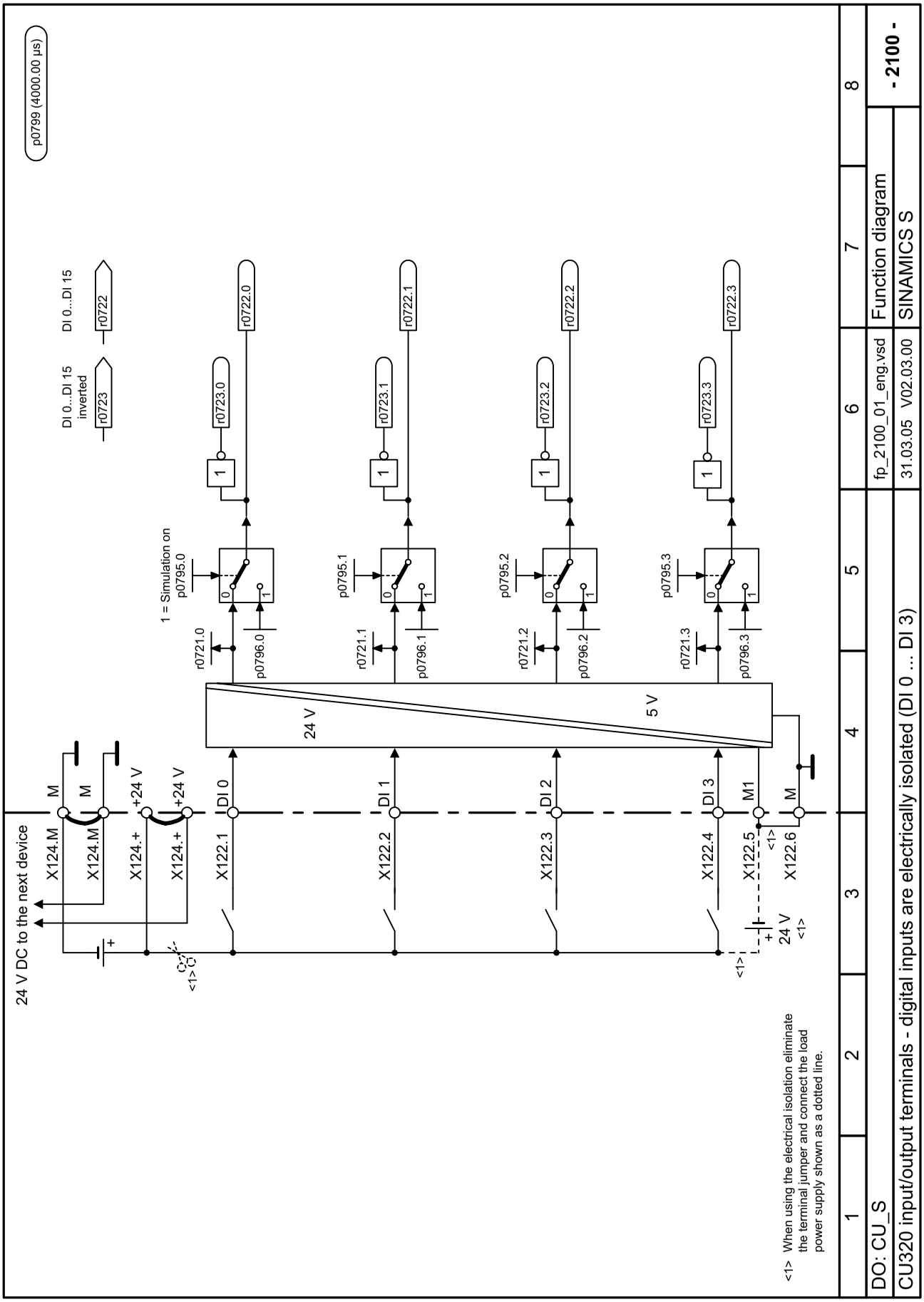

Figure 2-24 2100 – Digital inputs, electrically isolated (DI 0 ... DI 3)

© Siemens AG, 2005. All rights reserved

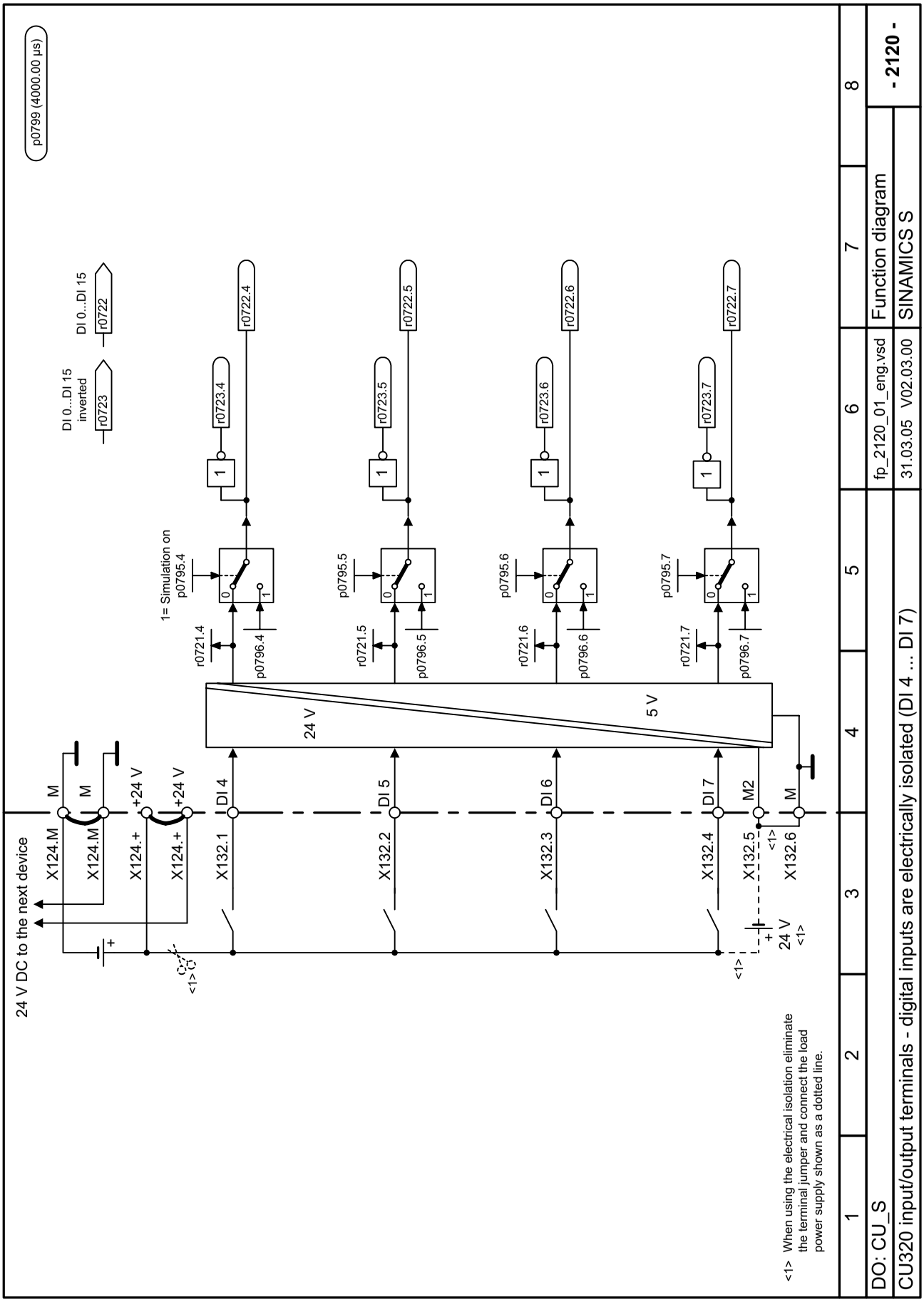

Figure 2-25 2120 – Digital inputs, electrically isolated (DI 4 ... DI 7)

© Siemens AG, 2005. All rights reserved

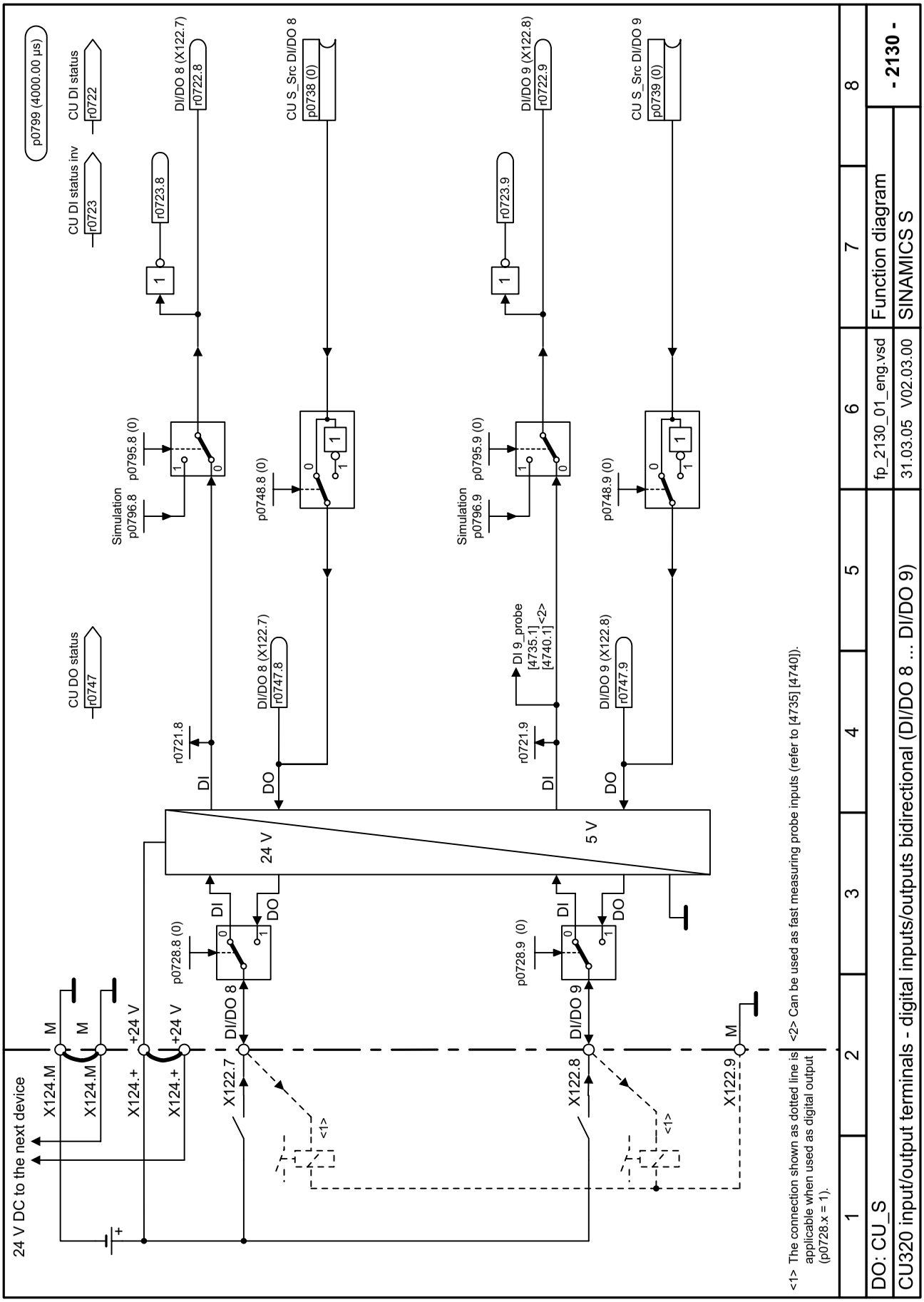

Figure 2-26 2130 – Digital inputs/outputs, bi-directional (DI/DO 8 ... DI/DO 9)

© Siemens AG, 2005. All rights reserved

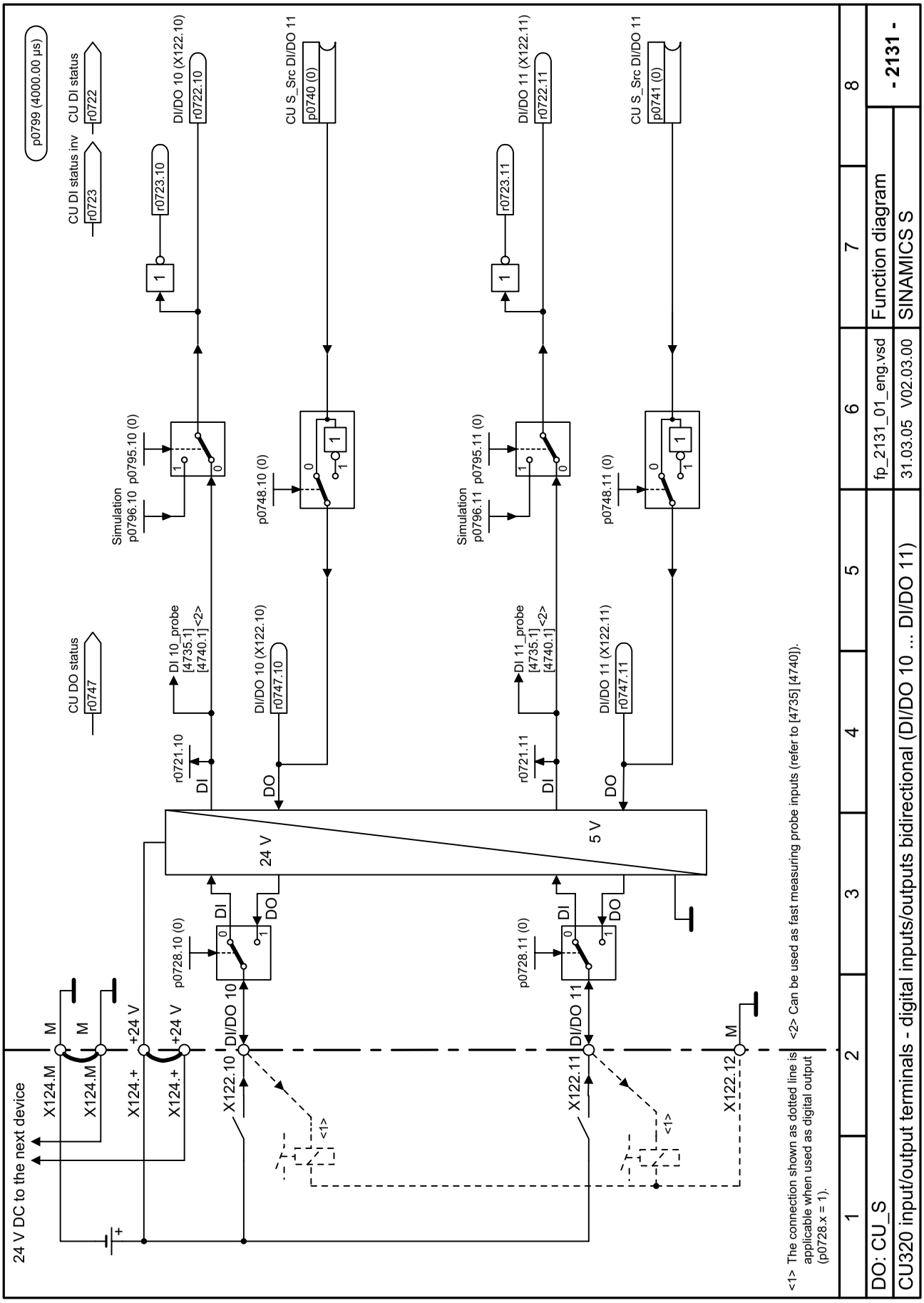

Figure 2-27 2131 – Digital inputs/outputs, bi-directional (DI/DO 10 ... DI/DO 11)

© Siemens AG, 2005. All rights reserved

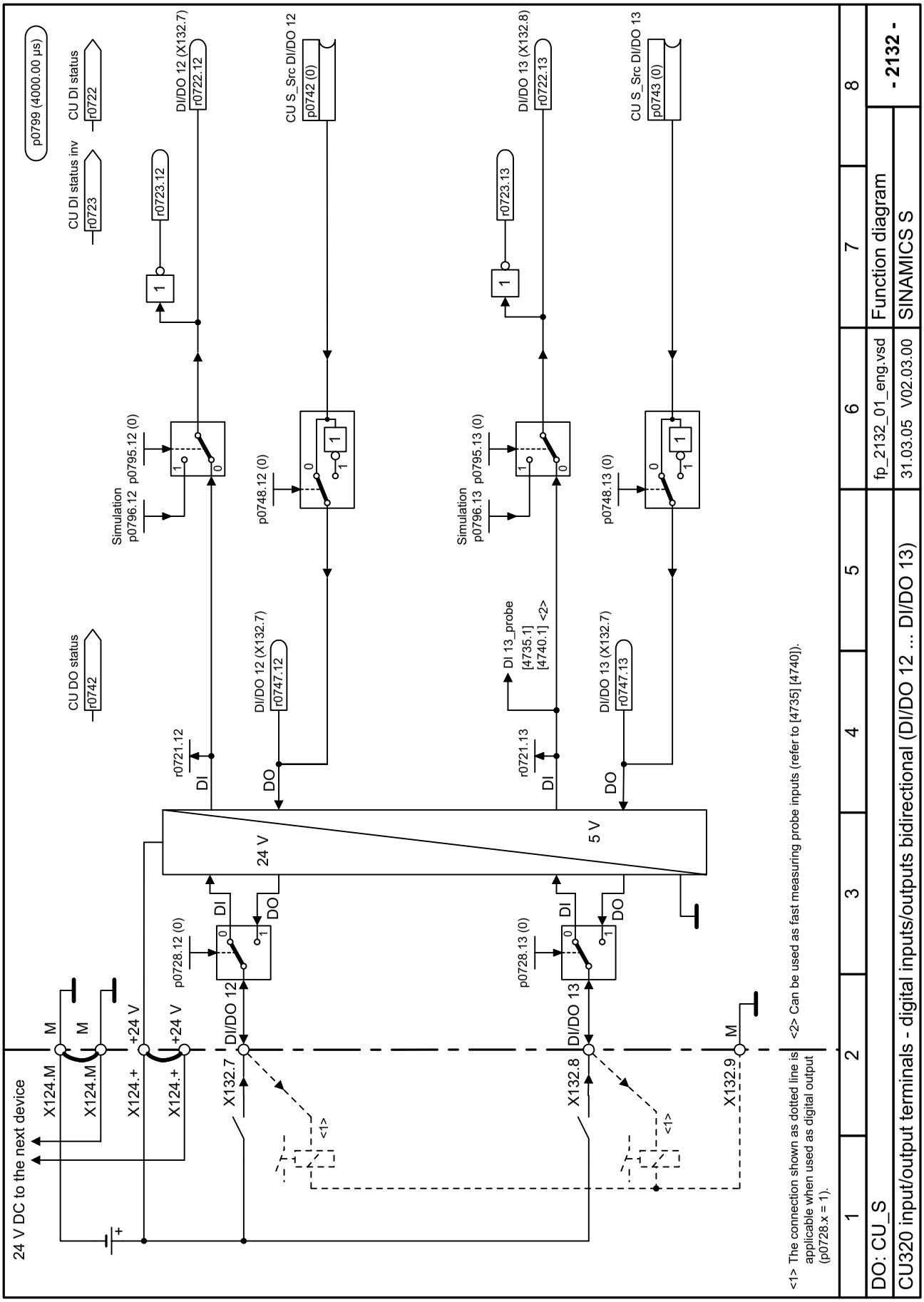

Figure 2-28 2132 – Digital inputs/outputs, bi-directional (DI/DO 12 ... DI/DO 13)

© Siemens AG, 2005. All rights reserved

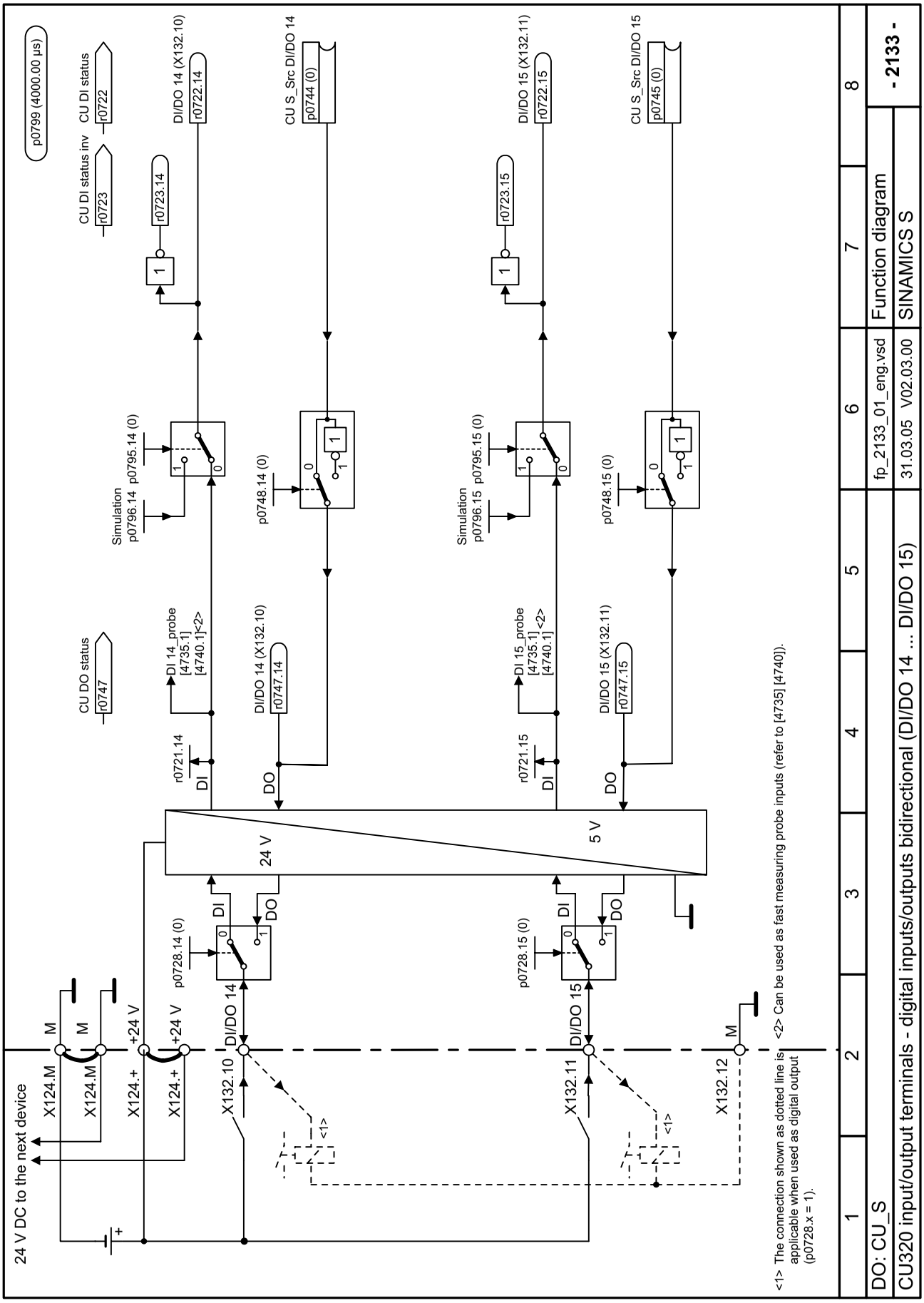

Figure 2-29 2133 – Digital inputs/outputs, bi-directional (DI/DO 14 ... DI/DO 15)

© Siemens AG, 2005. All rights reserved

2.5 CX32 input/output terminals

Function diagrams

2220 – Digital inputs, electrically isolated (DI 0 ... DI 3)	2-752
2230 – Digital inputs/outputs, bi-directional (DI/DO 8 ... DI/DO 9)	2-753
2231 – Digital inputs/outputs, bi-directional (DI/DO 10 ... DI/DO 11)	2-754

© Siemens AG, 2005. All rights reserved

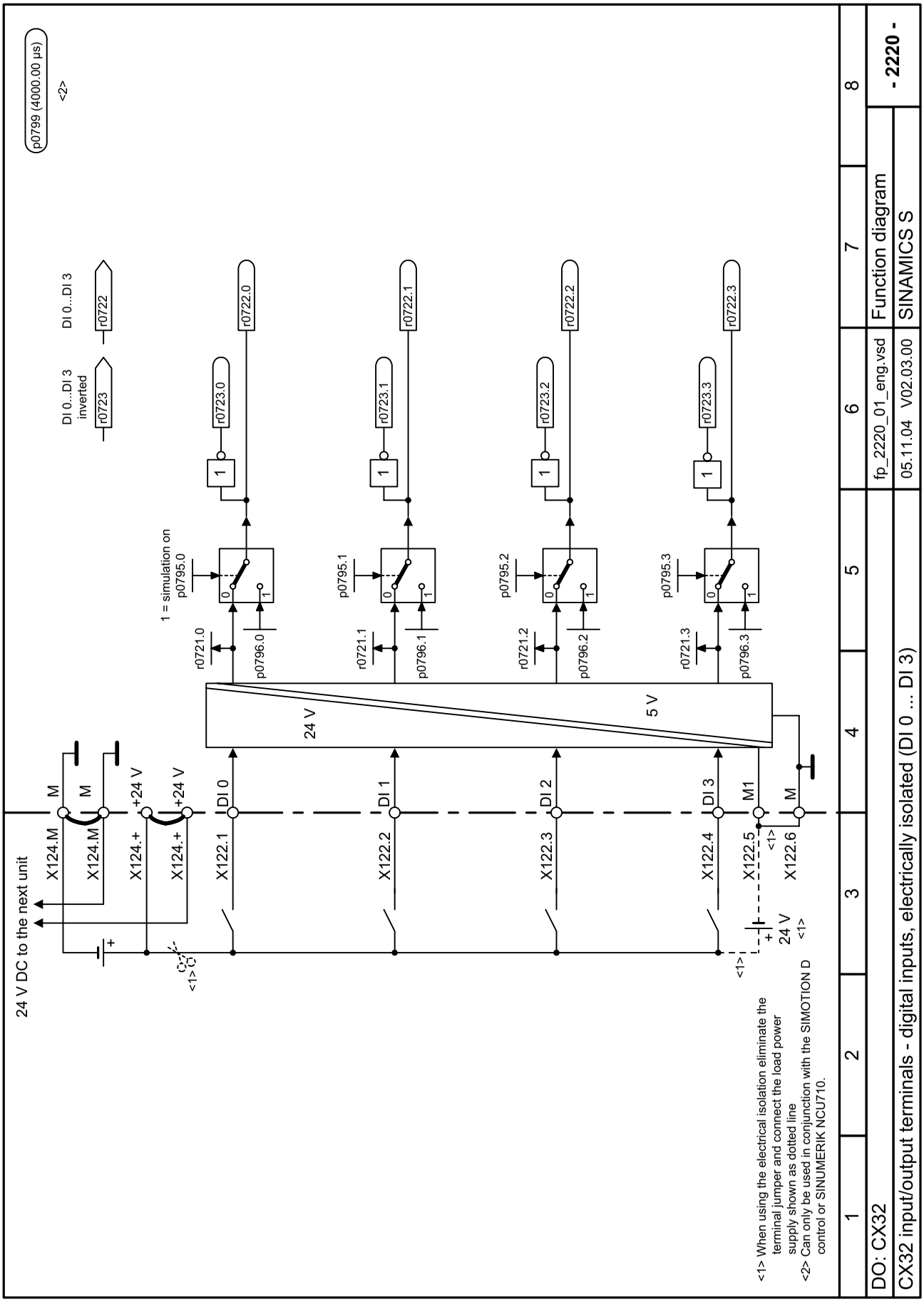

Figure 2-30 2220 – Digital inputs, electrically isolated (DI 0 ... DI 3)

© Siemens AG, 2005. All rights reserved

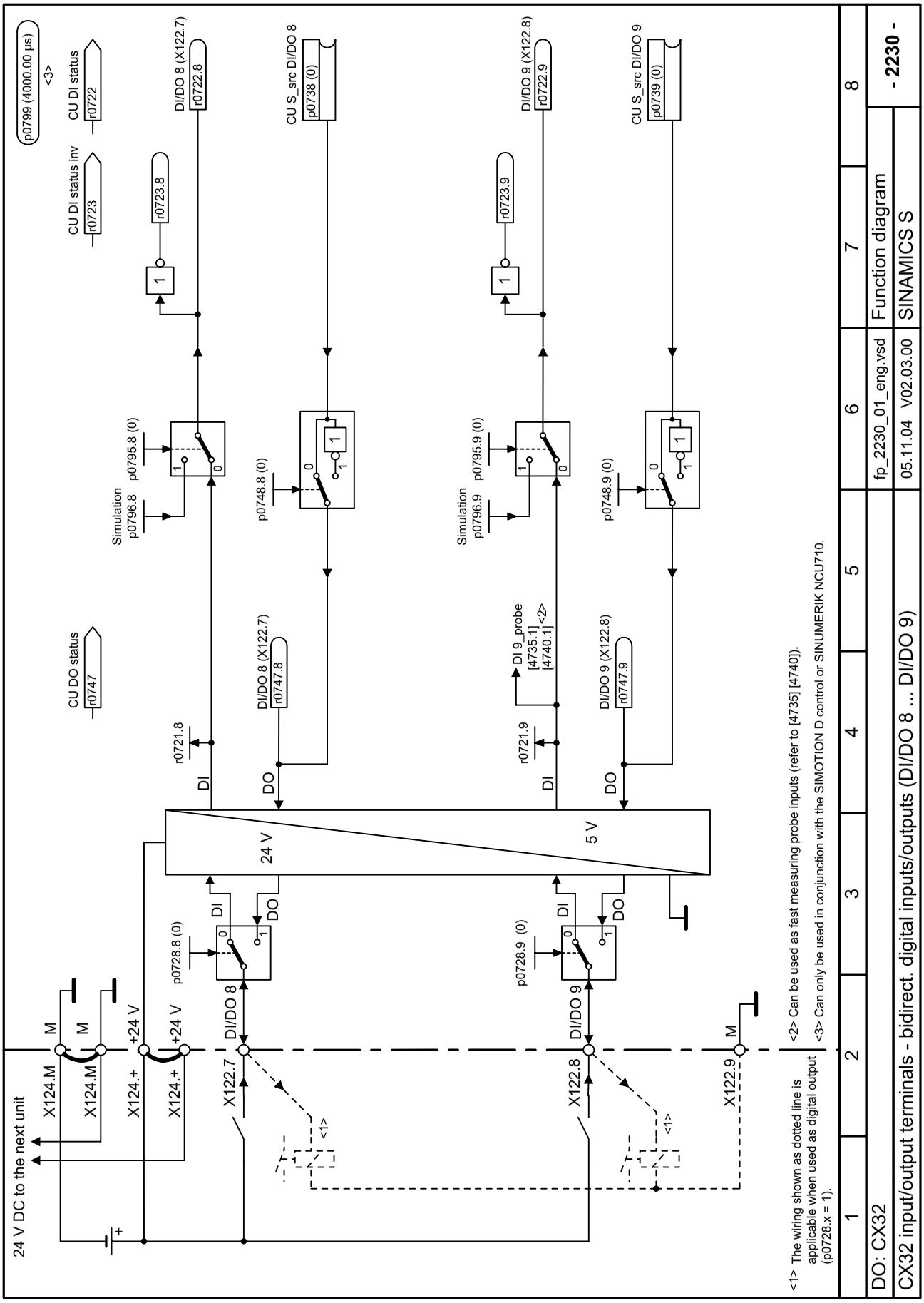

Figure 2-31 2230 – Digital inputs/outputs, bi-directional (DI/DO 8 ... DI/DO 9)

© Siemens AG, 2005. All rights reserved

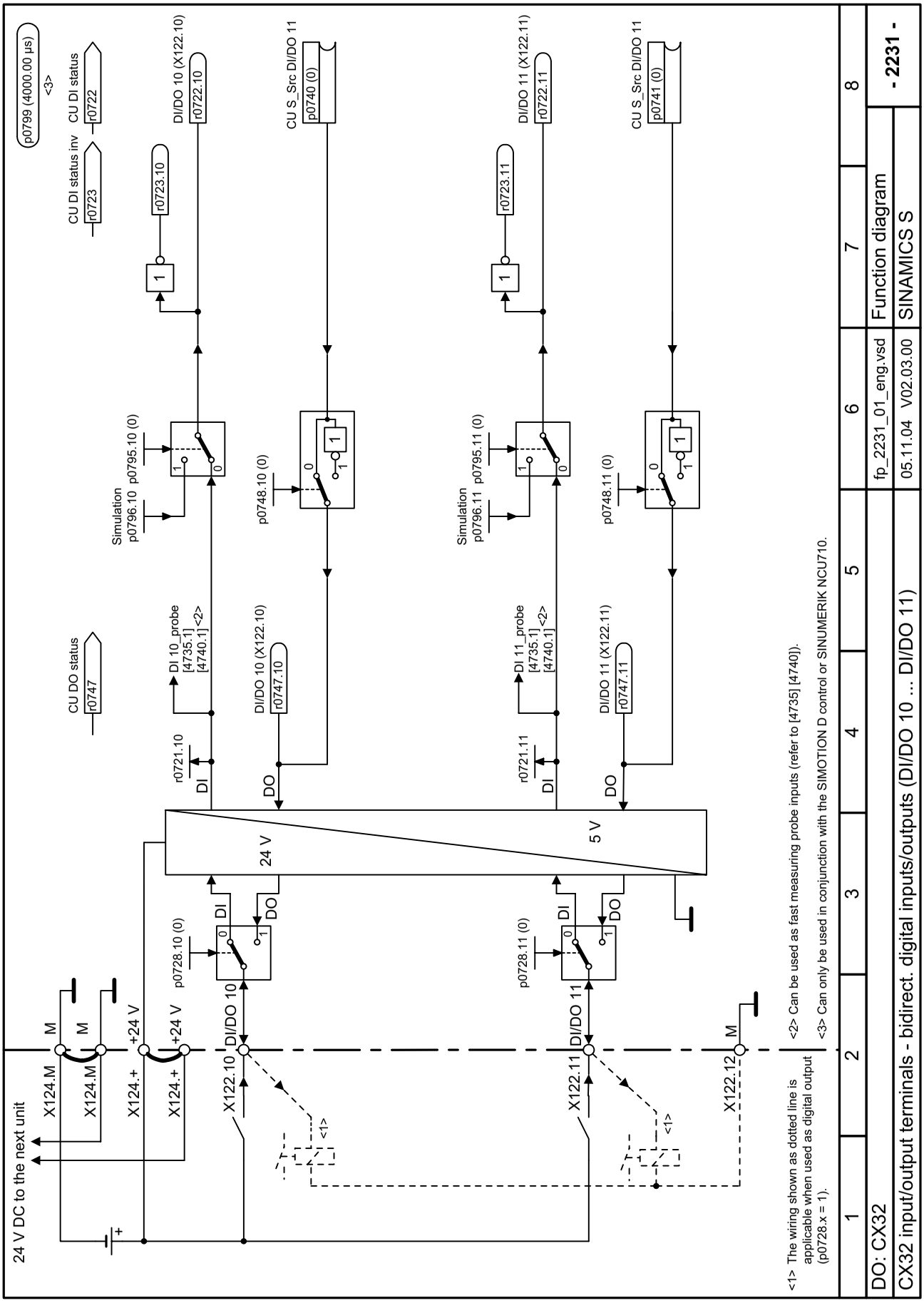

Figure 2-32 2231 – Digital inputs/outputs, bi-directional (DI/DO 10 ... DI/DO 11)

© Siemens AG, 2005. All rights reserved

2.6 PROFIBUS

Function diagrams

2410 – PROFIBUS address, diagnostics	2-756
2420 – Messages and process data	2-757
2440 – Standard/manufacturer-specific receive telegram interconnection	2-758
2441 – STW1 control word interconnection (p2038 = 2)	2-759
2442 – STW1 control word interconnection (p2038 = 0)	2-760
2443 – STW1 control word interconnection (p2038 = 1)	2-761
2444 – STW2 control word interconnection (p2038 = 0)	2-762
2445 – STW2 control word interconnection (p2038 = 1)	2-763
2447 – E_STW1 control word infeed interconnection	2-764
2448 – CU_STW control word infeed interconnection	2-765
2449 – A_DIGITAL interconnection	2-766
2450 – Standard/manufacturer-specific send telegram interconnection	2-767
2451 – ZSW1 status word interconnection (p2038 = 2)	2-768
2452 – ZSW1 status word interconnection (p2038 = 0)	2-769
2453 – ZSW1 status word interconnection (p2038 = 1)	2-770
2454 – ZSW2 status word interconnection (p2038 = 0)	2-771
2455 – ZSW2 status word interconnection (p2038 = 1)	2-772
2456 – MELDW status word interconnection	2-773
2457 – E_ZSW1 status word infeed interconnection	2-774
2458 – CU_ZSW status word interconnection	2-775
2459 – E_DIGITAL interconnection	2-776
2460 – Receive telegram, free interconnection via BICO (p0922 = 999)	2-777
2470 – Send telegram, free interconnection via BICO (p0922 = 999)	2-778
2472 – Status words, free interconnection	2-779
2481 – Receive telegram, free interconnection via BICO (p0922 = 999)	2-780
2483 – Send telegram, free interconnection via BICO (p0922 = 999)	2-781

© Siemens AG, 2005. All rights reserved

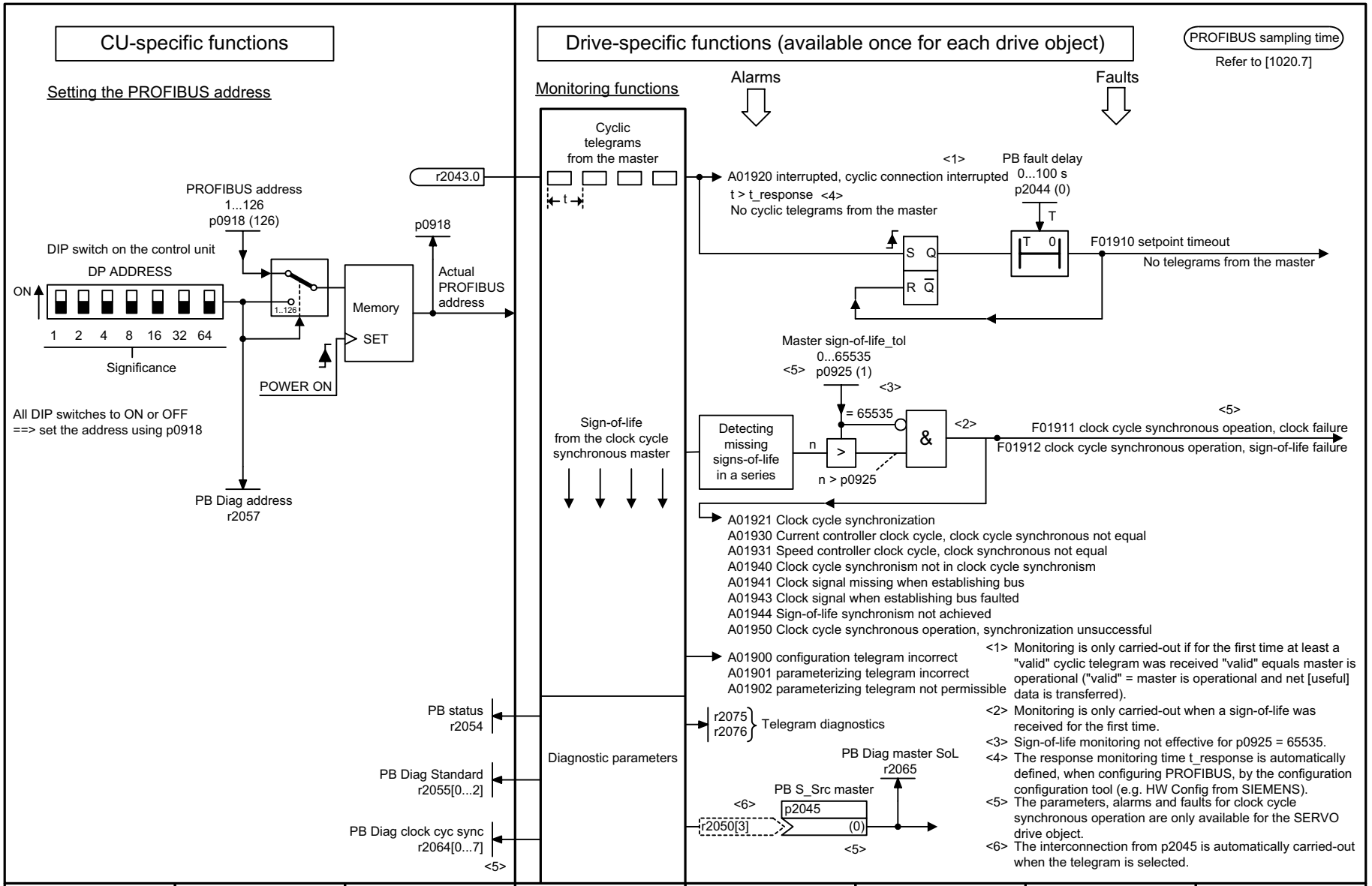

1	2	3	4	5	6	7	8
DO: A_INF, B_INF, S_INF, CU_S, SERVO, TB30, TM31, VECTOR					fp_2410_01_eng.vsd	Function diagram	- 2410 -
PROFIBUS - PROFIBUS address, diagnostics					15.07.05 V02.03.00	SINAMICS S	

Figure 2-33 2410 – PROFIBUS address, diagnostics

© Siemens AG, 2005. All rights reserved
SINAMICS S List Manual, Edition 06.2005

Telegram selection <1> p0922 (999) <2>

PROFIBUS sampling time
Refer to [1020.7]

Interconnection is made acc. to	Telegramm	Appl.-Class	Function in the drive	PZD 01	PZD 02	PZD 03	PZD 04	PZD 05	PZD 06	PZD 07	PZD 08	PZD 09	PZD 10	PZD 11	PZD 12	PZD 13	PZD 14	PZD 15	PZD 16	PZD 17	PZD 18	PZD 19
Standard telegrams	1	1	Speed control, 2 words	STW1	NSOLL_A	⇄ Receive telegram from PROFIBUS																
				ZSW1	NIST_A	⇉ Send telegram to PROFIBUS																
	2	1	Speed control, 4 words	STW1	NSOLL_B		STW2															
				ZSW1	NIST_B		ZSW2															
[2440] [2450] automatically	3	1, 4	Speed control, 1 position encoder	STW1	NSOLL_B		STW2	G1_STW														
				ZSW1	NIST_B		ZSW2	G1_ZSW	G1_XIST1		G1_XIST2											
	4	1, 4	Speed control, 2 position encoder	STW1	NSOLL_B		STW2	G1_STW	G2_STW													
				ZSW1	NIST_B		ZSW2	G1_ZSW	G1_XIST1		G1_XIST2	G2_ZSW	G2_XIST1	G2_XIST2								
	5	4 DSC	DSC, 1 position encoder	STW1	NSOLL_B		STW2	G1_STW	XERR		KPC											
				ZSW1	NIST_B		ZSW2	G1_ZSW	G1_XIST1		G1_XIST2											
	6	4 DSC	DSC, 2 position encoder	STW1	NSOLL_B		STW2	G1_STW	G2_STW	XERR		KPC										
				ZSW1	NIST_B		ZSW2	G1_ZSW	G1_XIST1		G1_XIST2	G2_ZSW	G2_XIST1	G2_XIST2								
	20	1	Closed-loop control, VIK-NAMUR	STW1	NSOLL_A																	
				ZSW1	NIST_A_GLATT	IAIST_GLATT	MIST_GLATT	PIST_GLATT	<4>													
Manufacturer-specific telegrams	102	1, 4	Speed control with torque reduction, 1 position encoder	STW1	NSOLL_B		STW2	MOMRED	G1_STW													
				ZSW1	NIST_B		ZSW2	MELDW	G1_ZSW	G1_XIST1		G1_XIST2										
	103	1, 4	Speed control with torque reduction, 2 position encoder	STW1	NSOLL_B		STW2	MOMRED	G1_STW	G2_STW												
				ZSW1	NIST_B		ZSW2	MELDW	G1_ZSW	G1_XIST1		G1_XIST2	G2_ZSW	G2_XIST1	G2_XIST2							
	105	4	DSC with torque reduction, 1 position encoder	STW1	NSOLL_B		STW2	MOMRED	G1_STW	XERR		KPC										
				ZSW1	NIST_B		ZSW2	MELDW	G1_ZSW	G1_XIST1		G1_XIST2										
[2440] [2450] automatically	106	4	DSC with torque reduction, 2 position encoder	STW1	NSOLL_B		STW2	MOMRED	G1_STW	G2_STW	XERR		KPC									
				ZSW1	NIST_B		ZSW2	MELDW	G1_ZSW	G1_XIST1		G1_XIST2	G2_ZSW	G2_XIST1	G2_XIST2				GL = GLATT			
	116	4	DSC with torque reduction, 2 position encoder	STW1	NSOLL_B		STW2	MOMRED	G1_STW	G2_STW	XERR		KPC									
				ZSW1	NIST_B		ZSW2	MELDW	G1_ZSW	G1_XIST1		G1_XIST2	G2_ZSW	G2_XIST1	G2_XIST2	AIST_GL	MSOLL_GL	PIST_GL	ITIST_GL			
	352	1	Closed-loop speed control, PCS7	STW1	NSOLL_A	<5>	<5>	<5>	<5>													
				ZSW1	NIST_A_GLATT	IAIST_GLATT	MIST_GLATT	WARN_CODE	FAULT_CODE													
	370	-	Infeed, 1 word	E_STW1																		
				E_ZSW1																		
	390	-	CU (DO1), Digitale IOs	CU_STW	A_DIGITAL																	
				CU_ZSW	E_DIGITAL																	
	391	-	CU (DO1), Digitale IOs and Measuring probe	CU_STW	A_DIGITAL	MT_STW																
				CU_ZSW	E_DIGITAL	MT_ZSW	MT1_ZS_F	MT1_ZS_S	MT2_ZS_F	MT2_ZS_S												
Free telegram	[2460] [2470] 999	-	Free interconnection via BICO	STW1<3>	Receive telegram length can be freely selected via the central PROFIBUS configuring in the master																	
				ZSW1<3>	Send telegram length can be freely selected via the central PROFIBUS configuring in the master																	

<1> Depending on the drive object, only specific telegrams can be used.
<2> When p0922 = 999 is changed to another value, the telegram is automatically assigned according to [2420].
If p0922 is not equal to 999 and is changed to p0922 = 999, the "old" telegram assignment is kept according to [2420]!
<3> In order to comply with the PROFIdrive profile, PZD1 must be used as control word 1 (STW1) or status word 1 (ZSW1).
p2037 should be set to 2 if STW1, with PZD1, is not transferred according to the PROFIdrive profile.
<4> Freely interconnectable (pre-setting: MELD_NAMUR).
<5> Can be freely connected.

1	2	3	4	5	6	7	8
DO: A_INF, B_INF, CU_S, S_INF, SERVO, VECTOR					fp_2420_01_eng.vsd	Function diagram	- 2420 -
PROFIBUS - telegrams and process data					09.06.05 V02.03.00	SINAMICS S	

Figure 2-34 2420 – Messages and process data

© Siemens AG, 2005. All rights reserved
SINAMICS S List Manual, Edition 06.2005

PROFIBUS sampling time
Refer to [1020.7]

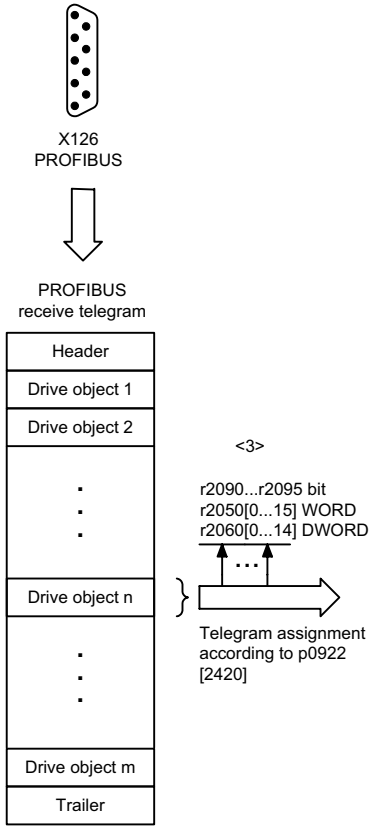

Signal receivers for PZD receive signals			<1>		<2>	
Signal	Meaning	PROFIdrive Signal No.	Interconnection parameter	Function diagram	Data type	Normalization
STW1	Control word 1 for telegram 1 ... 106	1	(bit serial)	[2442] [2443]	U16	-
STW2	Control word 2 for telegram 1 ... 106	3	(bit serial)	[2444] [2445]	U16	-
NSOLL_A	Speed setpoint A (16-bit)	5	p1070	[3030.2]	I16	4000 hex ≙ p2000
NSOLL_B	Speed setpoint B (32-bit)	7	**p1155 p1430 (DSC)**	[3080.4] [3090.8]	I32	4000 0000 hex ≙ p2000
G1_STW	Encoder 1 control word	9	p0480[0]	[4720]	U16	
G2_STW	Encoder 2 control word	13	p0480[1]	[4720]	U16	
G3_STW	Encoder 3 control word	17	p0480[2]	[4720]	U16	
A_DIGITAL	Digital outputs	22	(bit serial)	[2449]	U16	
XERR	Position deviation	25	p1190	[3090.5]	I32	
KPC	Position controller gain factor	26	p1191	[3090.5]	I32	
MOMRED	Torque reduction	101	p1542	[5610.2]	I16	4000 hex ≙ p2003
MT_STW	Control word for Measuring probe	130	p0682	-	U16	
E_STW1	Control word for INFEED	320	(bit serial)	[2447]	U16	
CU_STW	Control word for CU	500	(bit serial)	[2448]	U16	

<1> When selecting a standard telegram or a manufacturer-specific telegram using p0922, these interconnection parameters of the command data set CDS are automatically set to 0.
<2> Data type according to to the PROFIdrive profile: I16 = Integer16, I32 = Integer32, U16 = Unsigned16, U32 = Unsigned32.
<3> Display parameters for receive data according to [2460].

1	2	3	4	5	6	7	8
DO: A_INF, B_INF, S_INF, SERVO, VECTOR					fp_2440_01_eng.vsd	Function diagram	**- 2440 -**
PROFIBUS - standard/manufacturer-specific receive telegram interconnection					15.07.05 V02.03.00	SINAMICS S	

Figure 2-35 2440 – Standard/manufacturer-specific receive telegram interconnection

© Siemens AG, 2005. All rights reserved
SINAMICS S List Manual, Edition 06.2005

PROFIBUS sampling time
Refer to [1020.7]

Signal targets for STW1 (Interface Mode PROFIdrive VIK-NAMUR, p2038 = 2) <1>

Signal	Meaning	Interconnection parameters	[Function diagram] internal control word	[Function diagram] signal target	Inverted
STW1.0	= ON (pulses can be enabled) 0 = OFF1 (braking with ramp-function generator, then pulse cancellation and ready-to-power-up)	p0840[0] = r2090.0	[2501.3]	[2610]	-
STW1.1	**1 = No OFF2 (enable is possible)** 0 = OFF2 (immediate pulse cancellation and power-on inhibit)	p0844[0] = r2090.1	[2501.3]	[2610]	-
STW1.2	**1 = No OFF3 (enable possible)** 0 = OFF3 (braking with the OFF3 ramp p1135, then pulse cancellation and power-on inhibit)	p0848[0] = r2090.2	[2501.3]	[2610]	-
STW1.3	**1 = Enable operation (pulses can be enabled)** 0 = Inhibit operation (cancel pulses)	p0852[0] = r2090.3	[2501.3]	[2610]	-
STW1.4	**1 = operating condition (the ramp-function generator can be enabled)** 0 = inhibit ramp-function generator (set the ramp-function generator output to zero)	p1140[0] = r2090.4	[2501.3]	[3060] [3070] [3080]	-
STW1.5	**1 = Enable the ramp-function generator** 0 = stop the ramp-function generator (freeze the ramp-function generator output)	p1141[0] = r2090.5	[2501.3]	[3060] [3070]	-
STW1.6	**1 = Enable setpoint** 0 = inhibit setpoint (set the ramp-function generator input to zero)	p1142[0] = r2090.6	[2501.3]	[3060] [3070] [3080]	-
STW1.7	**= Acknowledge faults**	p2103[0] = r2090.7	[2546.1]	[8060]	-
STW1.8	**Reserved**	-	-	-	-
STW1.9	**Reserved**	-	-	-	-
STW1.10	**1 = Control via PLC** <2>	p0854[0] = r2090.10	[2501.3]	[2501]	-
STW1.11	**1 = Dir of rot reversal**	p1113[0] = r2090.11	[2505.3]	[3040]	-
STW1.12	**Reserved**	-	-	-	-
STW1.13	**Reserved**	-	-	-	-
STW1.14	**Reserved**	-	-	-	-
STW1.15	**1 = Parameter data set changeover (DDS) data set 2** 0 = Parameter data set changeover (DDS) data set 1	p0820[0] = 2090.15	-	[8565]	-

<1> Used in telegram 20.
<2> Bit 10 must be set in the first PZD word of the telegram received from PROFIBUS in order that the drive accepts the process data.

1	2	3	4	5	6	7	8
DO: SERVO, VECTOR					fp_2441_01_eng.vsd	Function diagram	- 2441 -
PROFIBUS - STW1 control word interconnection (p2038 = 2)					17.02.05 V02.03.00	SINAMICS S	

Figure 2-36 2441 – STW1 control word interconnection (p2038 = 2)

© Siemens AG, 2005. All rights reserved
SINAMICS S List Manual, Edition 06.2005

PROFIBUS sampling time
Refer to [1020.7]

Signal targets for STW1 (Interface Mode SINAMICS/MICROMASTER, p2038 = 0) <1>

Signal	Meaning	Interconnection parameters	[Function diagram] internal control word	[Function diagram] signal target	Inverted
STW1.0	= ON (pulses can be enabled) **0 = OFF1** (braking with ramp-function generator, then pulse cancellation and ready-to-power-up)	p0840[0] = r2090.0	[2501.3]	[2610]	-
STW1.1	**1 = No OFF2** (enable is possible) 0 = OFF2 (immediate pulse cancellation and power-on inhibit)	p0844[0] = r2090.1	[2501.3]	[2610]	-
STW1.2	**1 = No OFF3** (enable possible) 0 = OFF3 (braking with the OFF3 ramp p1135, then pulse cancellation and power-on inhibit)	p0848[0] = r2090.2	[2501.3]	[2610]	-
STW1.3	**1 = Enable operation** (pulses can be enabled) 0 = Inhibit operation (cancel pulses)	p0852[0] = r2090.3	[2501.3]	[2610]	-
STW1.4	**1 = operating condition** (the ramp-function generator can be enabled) 0 = inhibit ramp-function generator (set the ramp-function generator output to zero)	p1140[0] = r2090.4	[2501.3]	[3060] [3070] [3080]	-
STW1.5	**1 = Enable the ramp-function generator** 0 = stop the ramp-function generator (freeze the ramp-function generator output)	p1141[0] = r2090.5	[2501.3]	[3060] [3070]	-
STW1.6	**1 = Enable setpoint** 0 = inhibit setpoint (set the ramp-function generator input to zero)	p1142[0] = r2090.6	[2501.3]	[3060] [3070] [3080]	-
STW1.7	**= Acknowledge faults**	p2103[0] = r2090.7	[2546.1]	[8060]	-
STW1.8	**Reserved**	-	-	-	-
STW1.9	**Reserved**	-	-	-	-
STW1.10	**1 = Control via PLC** <2>	p0854[0] = r2090.10	[2501.3]	[2501]	-
STW1.11	**1 = Dir of rot reversal** <3>	p1113[0] = r2090.11	[2505.3]	[3040]	-
STW1.12	**Reserved**	-	-	-	-
STW1.13	**1 = Motorized potentiometer, setpoint, raise** <3>	p1035[0] = r2090.13	[2505.3]	[3020]	-
STW1.14	**1 = Motorized potentiometer, setpoint, lower** <3>	p1036[0] = r2090.14	[2505.3]	[3020]	-
STW1.15	**Reserved**	-	-	-	-

<1> Used in telegram 1, 2, 3, 4, 5, 6, 352, 999.
<2> Bit 10 must be set in the first PZD word of the telegram received from PROFIBUS in order that the drive accepts the process data.
<3> Only for "expanded setpoint channel" and "expanded ramp-function generator"

1	2	3	4	5	6	7	8
DO: SERVO, VECTOR					fp_2442_01_eng.vsd	Function diagram	- 2442 -
PROFIBUS - STW1 control word interconnection (p2038 = 0)					29.04.05 V02.03.00	SINAMICS S	

Figure 2-37 2442 – STW1 control word interconnection (p2038 = 0)

© Siemens AG, 2005. All rights reserved
SINAMICS S List Manual, Edition 06.2005

PROFIBUS sampling time
Refer to [1020.7]

Signal targets for STW1 (Interface Mode SIMODRIVE 611 universal, p2038 = 1) <1>

Signal	Meaning	Interconnection parameters	[Function diagram] internal control word	[Function diagram] signal target	Inverted
STW1.0	↑ = ON (pulses can be enabled) **0 = OFF1** (braking with ramp-function generator, then pulse cancellation and ready-to-power-up)	p0840[0] = r2090.0	[2501.3]	[2610]	-
STW1.1	**1 = No OFF2** (enable is possible) 0 = OFF2 (immediate pulse cancellation and power-on inhibit)	p0844[0] = r2090.1	[2501.3]	[2610]	-
STW1.2	**1 = No OFF3** (enable possible) 0 = OFF3 (braking with the OFF3 ramp p1135, then pulse cancellation and power-on inhibit)	p0848[0] = r2090.2	[2501.3]	[2610]	-
STW1.3	**1 = Enable operation** (pulses can be enabled) 0 = Inhibit operation (cancel pulses)	p0852[0] = r2090.3	[2501.3]	[2610]	-
STW1.4	**1 = Operating condition** (the ramp-function generator can be enabled) 0 = inhibit ramp-function generator (set the ramp-function generator output to zero)	p1140[0] = r2090.4	[2501.3]	[3060] [3070] [3080]	-
STW1.5	1 **= Enable the ramp-function generator** 0 = stop the ramp-function generator (freeze the ramp-function generator output)	p1141[0] = r2090.5	[2501.3]	[3060] [3070]	-
STW1.6	**1 = Enable setpoint** 0 = inhibit setpoint (set the ramp-function generator input to zero)	p1142[0] = r2090.6	[2501.3]	[3060] [3070] [3080]	-
STW1.7	↑ **= Acknowledge faults**	p2103[0] = r2090.7	[2546.1]	[8060]	-
STW1.8	**Reserved**	-	-	-	-
STW1.9	**Reserved**	-	-	-	-
STW1.10	**1 = Control via PLC** <2>	p0854[0] = r2090.10	[2501.3]	[2501]	-
STW1.11	**1 = Ramp-function generator active**	p2148[0] = r2090.11	-	[8010]	-
STW1.12	**1 = Unconditionally open the holding brake**	p0855[0] = r2090.12	[2501.3]	[2701]	-
STW1.13	**Reserved**	-	-	-	-
STW1.14	1 = Closed-loop torque control active **0 = Closed-loop speed control active**	p1501[0] = r2090.14	[2520.3]	[5060] [6060]	-
STW1.15	**Reserved**	-	-	-	-

<1> Used in telegram 1, 2, 3, 4, 5, 6, 102, 103, 105, 106, 116, 352, 999.

<2> Bit 10 must be set in the first PZD word of the telegram received from PROFIBUS in order that the drive accepts the process data.

Figure 2-38 2443 – STW1 control word interconnection (p2038 = 1)

© Siemens AG, 2005. All rights reserved

1	2	3	4	5	6	7	8
DO: SERVO					fp_2443_01_eng.vsd	Function diagram	- 2443 -
PROFIBUS - STW1 control word interconnection (p2038 = 1)					27.07.054 V02.03.00	SINAMICS S	

PROFIBUS sampling time
Refer to [1020.7]

Signal targets for STW2 (Interface Mode SINAMICS/MICROMASTER, p2038 = 0) <1>

Signal	Meaning	Interconnection parameters	[Function diagram] internal control word	[Function diagram] signal target	Inverted
STW2.0	**Drive data set selection DDS, bit 0**	p0820[0] = r2093.0	-	[8565]	-
STW2.1	**Drive data set selection DDS, bit 1**	p0821[0] = r2093.1	-	[8565]	-
STW2.2	**Drive data set selection DDS, bit 2**	p0822[0] = r2093.2	-	[8565]	-
STW2.3	**Drive data set selection DDS, bit 3**	p0823[0] = r2093.3	-	[8565]	-
STW2.4	**Drive data set selection DDS, bit 4**	p0824[0] = r2093.4	-	[8565]	-
STW2.5	**Reserved**	-	-	-	-
STW2.6	**Reserved**	-	-	-	-
STW2.7	**1 = Parking axis**	p0897 = r2093.7	-	-	-
STW2.8	**1 = Traverse to fixed endstop**	p1545[0] = r2093.8	[2520.2]	[8012]	-
STW2.9	**Reserved**	-	-	-	-
STW2.10	**Reserved**	-	-	-	-
STW2.11	**1 = Motor changeover, feedback Signal**	p0828 = r2093.11	-	-	-
STW2.12	**Master sign-of-life, bit 0**	p2045 = r2050[3]	-	[2410]	-
STW2.13	**Master sign-of-life, bit 1**	p2045 = r2050[3]	-	[2410]	-
STW2.14	**Master sign-of-life, bit 2**	p2045 = r2050[3]	-	[2410]	-
STW2.15	**Master sign-of-life, bit 3**	p2045 = r2050[3]	-	[2410]	-

<1> Used in telegram 2, 3, 4, 5, 6, 999.

1	2	3	4	5	6	7	8
DO: SERVO					fp_2444_01_eng.vsd	Function diagram	- 2444 -
PROFIBUS - STW2 control word interconnection (p2038 = 0)					20.06.05 V02.03.00	SINAMICS S	

Figure 2-39 2444 – STW2 control word interconnection (p2038 = 0)

© Siemens AG, 2005. All rights reserved
SINAMICS S List Manual, Edition 06.2005

PROFIBUS sampling time
Refer to [1020.7]

Signal targets for STW2 (Interface Mode SIMODRIVE 611 universal, p2038 = 1) <1>

Signal	Meaning	Interconnection parameters	[Function diagram] internal control word	[Function diagram] signal target	Inverted
STW2.0	**Drive data set selection DDS, bit 0**	p0820[0] = r2093.0	-	[8565]	-
STW2.1	**Drive data set selection DDS, bit 1**	p0821[0] = r2093.1	-	[8565]	-
STW2.2	**Drive data set selection DDS, bit 2**	p0822[0] = r2093.2	-	[8565]	-
STW2.3	**Reserved**	-	-	-	-
STW2.4	**1 = Bypass ramp-function generator** <3>	p1122[0] = r2093.4	-	[3060] [3070]	-
STW2.5	**Reserved**	-	-	-	-
STW2.6	**1 = Integrator inhibit, speed controller** <2>	p1477[0] = r2093.6	-	[5040] [5210]	-
STW2.7	**1 = Parking axis active**	p0897 = r2093.7	-	-	-
STW2.8	**1 = Traverse to fixed endstop**	p1545[0] = r2093.8	[2520.2]	[8012]	-
STW2.9	**Drive data set selection DDS, bit 3**	p0823[0] = r2093.9	-	[8565]	-
STW2.10	**Drive data set selection DDS, bit 4**	p0824[0] = r2093.10	-	[8565]	-
STW2.11	**= Motor changeover, feedback Signal**	p0828 = r2093.11	-	-	-
STW2.12	**Master sign-of-life, bit 0**	p2045 = r2050[3]	-	[2410]	-
STW2.13	**Master sign-of-life, bit 1**	p2045 = r2050[3]	-	[2410]	-
STW2.14	**Master sign-of-life, bit 2**	p2045 = r2050[3]	-	[2410]	-
STW2.15	**Master sign-of-life, bit 3**	p2045 = r2050[3]	-	[2410]	-

<1> Used in telegram 2, 3, 4, 5, 6, 102, 103, 105, 106, 116, 999.
<2> For a 1 signal, the integral component of the speed controller is deleted/cleared and the integrator is inhibited.
<3> Only when the function module "expanded setpoint channel" is activated (r0108.8 = 1).

1	2	3	4	5	6	7	8
DO: SERVO					fp_2445_01_eng.vsd	Function diagram	- 2445 -
PROFIBUS - STW2 control word interconnection (p2038 = 1)					27.07.05 V02.03.00	SINAMICS S	

Figure 2-40 2445 – STW2 control word interconnection (p2038 = 1)

© Siemens AG, 2005. All rights reserved
SINAMICS S List Manual, Edition 06.2005

PROFIBUS sampling time
Refer to [1020.7]

Signal targets for E_STW1 <1>

Signal	Meaning	Interconnection parameters	[Function diagram] internal control word			[Function diagram] signal target			Inverted
			A_INF	B_INF	S_INF	A_INF	B_INF	S_INF	
STW1.0	**= ON** (close pre-charging/line contactor, pulses can be enabled) 0 = OFF1 (reduce Vdc along a ramp, pulse cancellation and open pre-charging/line contactor)	p0840[0] = r2090.0	[8920.3]	[8720.3]	[8820.3]	[8932]	[8732]	[8832]	-
STW1.1	**1 = No OFF2** (enable is possible) 0 = OFF2 (immediate pulse cancellation and power-on inhibit)	p0844[0] = r2090.1	[8920.3]	[8720.3]	[8820.3]	[8932]	[8732]	[8832]	-
STW1.2	**Reserved**		-	-	-	-	-	-	-
STW1.3	**1 = Enable operation** (pulses can be enabled) <3> 0 = Inhibit operation (cancel pulses)	p0852[0] = r2090.3	[8920.3]	-	[8820.3]	[8932]	-	[8832]	-
STW1.4	**Reserved**	-	-	-	-	-	-	-	-
STW1.5	**1 = Inhibit motoring operation** <4>	p3532= r2090.5	[8920.3]	-	-	[8920]	-	-	-
STW1.6	**1 = Inhibit regenerative operation** <3>	p3533= r2090.6	[8920.3]	-	[8820.3]	[8920]	-	[8820]	-
STW1.7	**= Acknowledge faults**	p2103[0] = r2090.7	[2546.3]			[8060]			-
STW1.8	**Reserved**	-	-	-	-	-	-	-	-
STW1.9	**Reserved**	-	-	-	-	-	-	-	-
STW1.10	**1 = Control via PLC** <2>	p0854[0] = r2090.10	[8920.3]	[8720.3]	[8820.3]	[8920]	[8720]	[8820]	-
STW1.11	**Reserved**	-	-	-	-	-	-	-	-
STW1.12	**Reserved**	-	-	-	-	-	-	-	-
STW1.13	**Reserved**	-	-	-	-	-	-	-	-
STW1.14	**Reserved**	-	-	-	-	-	-	-	-
STW1.15	**Reserved**	-	-	-	-	-	-	-	-

<1> Used in telegram 370.
<2> Bit 10 must be set in the first PZD word of the telegram received from PROFIBUS in order that the drive object accepts the process data.
<3> Only for A_INF, S_INF
<4> Only for A_INF

1	2	3	4	5	6	7	8
DO: A_INF, B_INF, S_INF					fp_2447_01_eng.vsd	Function diagram	- 2447 -
PROFIBUS - E_STW1 control word infeed interconnection					19.05.05 V02.03.00	SINAMICS S	

Figure 2-41 2447 – E_STW1 control word infeed interconnection

© Siemens AG, 2005. All rights reserved
SINAMICS S List Manual, Edition 06.2005

PROFIBUS sampling time
Refer to [1020.7]

Signal targets for CU_STW <1>

Signal	Meaning	Interconnection parameters	[Function diagram] internal control word	[Function diagram] signal target	Inverted
CU_STW.0	**Synchronisation**	p0681[0] = r2090.0	-	-	-
CU_STW.1	**Reserved**	-	-	-	-
CU_STW.2	**Reserved**	-	-	-	-
CU_STW.3	**Reserved**	-	-	-	-
CU_STW.4	**Reserved**	-	-	-	-
CU_STW.5	**Reserved**	-	-	-	-
CU_STW.6	**Reserved**	-	-	-	-
CU_STW.7	**Acknowledge faults**	p2103[0] = r2090.7	-	-	-
CU_STW.8	**Reserved**	-	-	-	-
CU_STW.9	**Reserved**	-	-	-	-
CU_STW.10	**Reserved**	-	-	-	-
CU_STW.11	**Reserved**	-	-	-	-
CU_STW.12	**Master sign-of-life, Bit 0**	p2045[0] =r2050[0]	-	-	-
CU_STW.13	**Master sign-of-life, Bit 1**	p2045[0] =r2050[0]	-	-	-
CU_STW.14	**Master sign-of-life, Bit 2**	p2045[0] =r2050[0]	-	-	-
CU_STW.15	**Master sign-of-life, Bit 3**	p2045[0] =r2050[0]	-	-	-

<1> Used in telegram 390, 391 and 999.

1	2	3	4	5	6	7	8
DO: CU_S					fp_2448_01_eng.vsd	Function diagram	**- 2448 -**
PROFIBUS - CU_STW control word Control Unit interconnection					27.07.05 V02.03.00	SINAMICS S	

Figure 2-42 2448 – CU_STW control word infeed interconnection

© Siemens AG, 2005. All rights reserved
SINAMICS S List Manual, Edition 06.2005

PROFIBUS sampling time
Refer to [1020.7]

Signal targets for A_DIGITAL <1>

Signal	Meaning	Interconnection parameters <3>	[Function diagram] internal control word	[Function diagram] signal target	Inverted
A_DIGITAL.0	**Digital Output 8 (DI/DO8)** <2>	p0738[0] = r2091[0]	-	-	-
A_DIGITAL.1	**Digital Output 9 (DI/DO9)** <2>	p0739[0] = r2091[1]	-	-	-
A_DIGITAL.2	**Digital Output 10 (DI/DO10)** <2>	p0740[0] = r2091[2]	-	-	-
A_DIGITAL.3	**Digital Output 11 (DI/DO11)** <2>	p0741[0] = r2091[3]	-	-	-
A_DIGITAL.4	**Digital Output 12 (DI/DO12)** <2>	p0742[0] = r2091[4]	-	-	-
A_DIGITAL.5	**Digital Output 13 (DI/DO13)** <2>	p0743[0] = r2091[5]	-	-	-
A_DIGITAL.6	**Digital Output 14 (DI/DO14)** <2>	p0744[0] = r2091[6]	-	-	-
A_DIGITAL.7	**Digital Output 15 (DI/DO15)** <2>	p0745[0] = r2091[7]	-	-	-
A_DIGITAL.8	**Reserved**	-	-	-	-
A_DIGITAL.9	**Reserved**	-	-	-	-
A_DIGITAL.10	**Reserved**	-	-	-	-
A_DIGITAL.11	**Reserved**	-	-	-	-
A_DIGITAL.12	**Reserved**	-	-	-	-
A_DIGITAL.13	**Reserved**	-	-	-	-
A_DIGITAL.14	**Reserved**	-	-	-	-
A_DIGITAL.15	**Reserved**	-	-	-	-

<1> Used in telegram 390, 391 and 999. <2> Can be parameterized via p0728 either as input (DI) or as output (DO). <3> Initialization alterable.

1	2	3	4	5	6	7	8
DO: CU_S					fp_2449_01_eng.vsd	Function diagram	- 2449 -
PROFIBUS - A_DIGITAL Verschaltung					26.07.05 V02.03.00	SINAMICS S	

Figure 2-43 2449 – A_DIGITAL interconnection

© Siemens AG, 2005. All rights reserved
SINAMICS S List Manual, Edition 06.2005

Signal sources for PZD send signals					<1>	
Signal	Description	PROFIdrive Signal No.	Interconnection parameter	Function diagram	Data type	Normalization
ZSW1	Status word 1	2	r2089[0]	[2452][2453]	U16	-
ZSW2	Status word 2	4	r2089[1]	[2454][2455]	U16	-
NIST_A	Speed setpoint A (16 bit)	6	r0063[0]	[6010]	I16	4000 hex ≙ p2000
NIST_B	Speed setpoint B (32 bit)	8	r0063	[4710]	I32	4000 0000 hex ≙ p2000
G1_ZSW	Encoder 1 status word	10	r0481[0]	[4730]	U16	
G1_XIST1	Encoder 1 actual position 1	11	r0482[0]	[4704]	U32	
G1_XIST2	Encoder 1 actual position 2	12	r0483[0]	[4704]	U32	
G2_ZSW	Encoder 2 status word	14	r0481[1]	[4730]	U16	
G2_XIST1	Encoder 2 actual position 1	15	r0482[1]	[4704]	U32	
G2_XIST2	Encoder 2 actual position 2	16	r0483[1]	[4704]	U32	
G3_ZSW	Encoder 3 status word	18	r0481[2]	[4730]	U16	
G3_XIST1	Encoder 3 actual position 1	19	r0482[2]	[4704]	U32	
G3_XIST2	Encoder 3 actual position 2	20	r0483[2]	[4704]	U32	
E_DIGITAL	Digital inputs	21	r2089[2]	[2459]	U16	
IAIST_GLATT	Absolute actual current, smoothed	51	r0068[1]	[6714]	I16	4000 hex ≙ p2002
ITIST_GLATT	Active current actual value, torque-generating	52	r0078[1]	[5730]	I16	4000 hex ≙ p2002
PIST_GLATT	Power factor, smoothed	53	r0082[1]	[6714]	I16	4000 hex p2004
MIST_GLATT	Actual torque smoothed	54	r0080[1]	[6714]	I16	4000 hex ≙ p2003
NIST_A_GLATT	Actual speed, smoothed	57	r0063[1]	[4710][6010]	I16	4000 hex ≙ p2000
MELD_NAMUR	VIK-NAMUR message bit bar	58	r3113	-	U16	≙
MELDW	Message word	102	r2089[2]	[2456]	U16	
MSOLL_GLATT	Torque setpoint total	120	r0079[1]	[5610]	I16	4000 hex ≙ p2003
AIST_GLATT	Torque utilization	121	r0081	[8012]	I16	4000 hex ≙ 100%
MT_ZSW	Status word for Measuring probe	131	r0688		U16	
MT1_ZS_F	Central meas. probe 1, meas. time rising edge	132	r0687[0]		U16	
MT1_ZS_S	Central meas. probe 1, meas. time falling edge	133	r0686[0]		U16	
MT2_ZS_F	Central meas. probe 2, meas. time rising edge	134	r0687[1]		U16	
MT2_ZS_S	Central meas. probe 2, meas. time falling edge	135	r0686[1]		U16	
FAULT_CODE	Fault code	301	r2131	[8060]	U16	
WARN_CODE	Alarm code	303	r2132	[8065]	U16	
E_ZSW1	Status word for INFEED	321	r0899, r2139	[2457]	U16	
CU_ZSW	Status word for Control Unit	501	r2089[1]	[2458]	U16	

<1> Data type according to the PROFIdrive profile: I16 = Integer16, I32 = Integer32, U16 = Unsigned16, U32 = Unsigned32

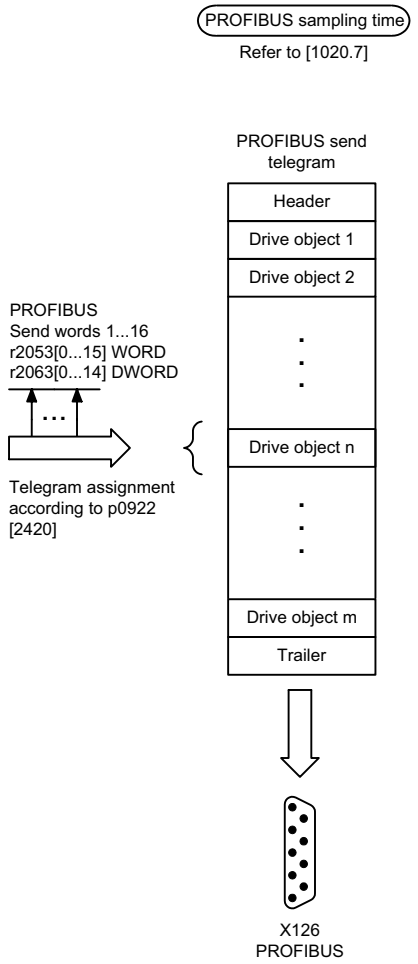

Figure 2-44 2450 – Standard/manufacturer-specific send telegram interconnection

1	2	3	4	5	6	7	8
DO: A_INF, B_INF, S_INF, SERVO, VECTOR					fp_2450_01_eng.vsd	Function diagram	- 2450 -
PROFIBUS - standard/manufacturer-specific send telegram interconnection					28.07.05 V02.03.00	SINAMICS S	

© Siemens AG, 2005. All rights reserved
SINAMICS S List Manual, Edition 06.2005

PROFIBUS sampling time
Refer to [1020.7]

Signal sources for ZSW1 (Interface Mode PROFIdrive VIK-NAMUR, p2038 = 2) <1>

Signal	Meaning	Interconnection parameters	[Function diagram] Internal status word	[Function diagram] signal source	Inverted <2>
ZSW1.0	**1 = Ready to power-up**	p2080[0] = r0899.0	[2503.7]	[2610]	-
ZSW1.1	**1 = Ready to operate** (DC link charged, pulses inhibited)	p2080[1] = r0899.1	[2503.7]	[2610]	-
ZSW1.2	**1 = Operation enabled** (drive follows n_set)	p2080[2] = r0899.2	[2503.7]	[2610]	-
ZSW1.3	**1 = Fault present**	p2080[3] = r2139.3	[2548.7]	[8060]	-
ZSW1.4	**1 = No coast to stop active (OFF2 inactive)**	p2080[4] = r0899.4	[2503.7]	[2610]	-
ZSW1.5	**1 = No fast stop active (OFF3 active)**	p2080[5] = r0899.5	[2503.7]	[2610]	-
ZSW1.6	**1 = Power-on inhibit active**	p2080[6] = r0899.6	[2503.7]	[2610]	-
ZSW1.7	**1 = Alarm present**	p2080[7] = r2139.7	[2548.7]	[8065]	-
ZSW1.8	**1 = Speed setpoint - actual value deviation within tolerance t_off**	p2080[8] = r2197.7	[2534.7]	[8010]	-
ZSW1.9	**1 = PLC requests control** <3>	p2080[9] = r0899.9	[2503.7]	[2503]	-
ZSW1.10	**1 = f or n comparison value reached/exceeded**	p2080[10] = r2199.1	[2536.7]	[8010]	-
ZSW1.11	**1 = I, M, or P limit reached**	p2080[11] = r1407.7	[2522.7]	[5610] [6060]	✔
ZSW1.12	**Reserved**	-	-	-	-
ZSW1.13	**1 = Alarm motor overtemperature**	p2080[13] = r2135.14	[2548.7]	[8016]	✔
ZSW1.14	**1 = Motor rotates forwards (n_act ≥ 0)** **0 = Motor rotates backwards (n_act < 0)**	p2080[14] = r2197.3	[2534.7]	[8010]	-
ZSW1.15	**Reserved**	-	-	-	-

<1> Used in telegram 20.
<2> The status word is generated using the binector-connector converter p2088[0].
<3> The master system requests the process data.

1	2	3	4	5	6	7	8
DO: SERVO, VECTOR					fp_2451_01_eng.vsd	Function diagram	- 2451 -
PROFIBUS - ZSW1 status word interconnection (p2038 = 2)					26.07.05 V02.03.00	SINAMICS S	

Figure 2-45 2451 – ZSW1 status word interconnection (p2038 = 2)

© Siemens AG, 2005. All rights reserved
SINAMICS S List Manual, Edition 06.2005

PROFIBUS sampling time
Refer to [1020.7]

Signal sources for ZSW1 (Interface Mode SINAMICS/MICROMASTER, p2038 = 0) <1>

Signal	Meaning	Interconnection parameters	[Function diagram] Internal status word	[Function diagram] Signal source	Inverted <2>
ZSW1.0	**1 = Ready to power-up**	p2080[0] = r0899.0	[2503.7]	[2610]	-
ZSW1.1	**1 = Ready to operate** (DC link charged, pulses inhibited)	p2080[1] = r0899.1	[2503.7]	[2610]	-
ZSW1.2	**1 = Operation enabled** (drive follows n_set)	p2080[2] = r0899.2	[2503.7]	[2610]	-
ZSW1.3	**1 = Fault present**	p2080[3] = r2139.3	[2548.7]	[8060]	-
ZSW1.4	**1 = No coast to stop active (OFF2 inactive)**	p2080[4] = r0899.4	[2503.7]	[2610]	-
ZSW1.5	**1 = No fast stop active (OFF3 inactive)**	p2080[5] = r0899.5	[2503.7]	[2610]	-
ZSW1.6	**1 = Power-on inhibit active**	p2080[6] = r0899.6	[2503.7]	[2610]	-
ZSW1.7	**1 = Alarm present**	p2080[7] = r2139.7	[2548.7]	[8065]	-
ZSW1.8	**1 = Speed setpoint - actual value deviation within tolerance t_off**	p2080[8] = r2197.7	[2534.7]	[8010]	-
ZSW1.9	**1 = PLC requests control** <3>	p2080[9] = r0899.9	[2503.7]	[2503]	-
ZSW1.10	**1 = f or n comparison value reached/exceeded**	p2080[10] = r2199.1	[2536.7]	[8010]	-
ZSW1.11	**1 = I, M, or P limit reached** <4>	p2080[11] = r1407.7	[2522.7]	[5610] [6060]	✔
ZSW1.12	**1 = Holding brake closed**	p2080[12] = r0899.12	[2503.7]	[2701]	-
ZSW1.13	**1 = Alarm motor overtemperature**	p2080[13] = r2135.14	[2548.7]	[8016]	✔
ZSW1.14	**1 = Motor rotates forwards (n_act ≥ 0)** **0 = Motor rotates backwards (n_act < 0)**	p2080[14] = r2197.3	[2534.7]	[8010]	-
ZSW1.15	**1 = Alarm, thermal overload, power module**	p2080[15] = r2135.15	[2548.7]	[8014]	✔

<1> Used in telegram 1, 2, 3, 4, 5, 6, 352, 999.
<2> The status word is generated using the binector-connector converter p2088[0].
<3> The master system requests the process data.
<4> Not for Vector V/f.

1	2	3	4	5	6	7	8
DO: SERVO, VECTOR					fp_2452_01_eng.vsd	Function diagram	- 2452 -
PROFIBUS - ZSW1 status word interconnection (p2038 = 0)					26.07.05 V02.03.00	SINAMICS S	

Figure 2-46 2452 – ZSW1 status word interconnection (p2038 = 0)

© Siemens AG, 2005. All rights reserved

PROFIBUS sampling time
Refer to [1020.7]

Signal sources for ZSW1 (Interface Mode SIMODRIVE 611 universal, p2038 = 1) <1>

Signal	Meaning	Interconnection parameters	[Function diagram] Internal status word	[Function diagram] Signal source	Inverted
ZSW1.0	**1 = Ready to power-up**	p2080[0] = r0899.0	[2503.7]	[2610]	-
ZSW1.1	**1 = Ready to operate** (DC link charged, pulses inhibited)	p2080[1] = r0899.1	[2503.7]	[2610]	-
ZSW1.2	**1 = Operation enabled** (drive follows n_set)	p2080[2] = r0899.2	[2503.7]	[2610]	-
ZSW1.3	**1 = Fault present**	p2080[3] = r2139.3	[2548.7]	[8060]	-
ZSW1.4	**1 = No coast-down active (OFF2 inactive)** **0 = Coast down active (OFF2 active)**	p2080[4] = r0899.4	[2503.7]	[2610]	-
ZSW1.5	**1 = No fast stop active (OFF3 inactive)** **0 = Fast stop active (OFF3 active)**	p2080[5] = r0899.5	[2503.7]	[2610]	-
ZSW1.6	**1 = Power-on inhibit activ**	p2080[6] = r0899.6	[2503.7]	[2610]	-
ZSW1.7	**1 = Alarm present**	p2080[7] = r2139.7	[2548.7]	[8065]	-
ZSW1.8	**1 = Speed setpoint - actual value deviation within tolerance t_off**	p2080[8] = r2197.7	[2534.7]	[8010]	-
ZSW1.9	**1 = PLC requests control** <2>	p2080[9] = r0899.9	[2503.7]	[2503]	-
ZSW1.10	**1 = f or n comparison value reached/exceeded**	p2080[10] = r2199.1	[2536.7]	[8010]	-
ZSW1.11	**Reserved**	-	-	-	-
ZSW1.12	**Reserved**	-	-	-	-
ZSW1.13	**Reserved**	-	-	-	-
ZSW1.14	**1 = Closed-loop torque controlled operation** **0 = Closed-loop speed controlled operation**	p2080[14] = r1407.2	[2522.7]	[2522]	-
ZSW1.15	**Reserved**	-	-	-	-

<1> Used in telegram 1, 2, 3, 4, 5, 6, 102, 103, 105, 106, 116, 352, 999.
<2> The master system requests the process data.

1	2	3	4	5	6	7	8
DO: SERVO					fp_2453_01_eng.vsd	Function diagram	- 2453 -
PROFIBUS - ZSW1 status word interconnection (p2038 = 1)					27.07.05 V02.03.00	SINAMICS S	

Figure 2-47 2453 – ZSW1 status word interconnection (p2038 = 1)

© Siemens AG, 2005. All rights reserved
SINAMICS S List Manual, Edition 06.2005

PROFIBUS sampling time
Refer to [1020.7]

Signal sources for ZSW2 (Interface Mode SINAMICS/MICROMASTER, p2038 = 0) <1>

	Signal	Meaning	Interconnection parameters	[Function diagram] internal status word	[Function diagram] signal source	Inverted
	ZSW2.0	**1 = Drive data set DDS effective, bit 0**	p2081[0] = r0051.0	-	[8565]	-
	ZSW2.1	**1 = Drive data set DDS effective, bit 1**	p2081[1] = r0051.1	-	[8565]	-
	ZSW2.2	**1 = Drive data set DDS effective, bit 2**	p2081[2] = r0051.2	-	[8565]	-
	ZSW2.3	**1 = Drive data set DDS effective, bit 3**	p2081[3] = r0051.3	-	[8565]	-
	ZSW2.4	**1 = Drive data set DDS effective, bit 4**	p2081[4] = r0051.4	-	[8565]	-
	ZSW2.5	**Reserved**	-	-	-	-
	ZSW2.6	**Reserved**	-	-	-	-
	ZSW2.7	**1 = Parking axis active**	p2081[7] = r0896.0	-	-	-
	ZSW2.8	**1 = Traverse to fixed endstop**	p2081[8] = r1406.8	-	[2520]	-
	ZSW2.9	**Reserved**	-	-	-	-
	ZSW2.10	**Reserved**	-	-	-	-
	ZSW2.11	**1 = Data set changeover active**	p2081[11] = r0835.0	-	-	-
<2>	ZSW2.12	**Slave sign-of-life bit 0**	Implicitly interconnected	-	-	-
<2>	ZSW2.13	**Slave sign-of-life bit 1**	Implicitly interconnected	-	-	-
<2>	ZSW2.14	**Slave sign-of-life bit 2**	Implicitly interconnected	-	-	-
<2>	ZSW2.15	**Slave sign-of-life bit 3**	Implicitly interconnected	-	-	-

<1> Used in telegrams 2, 3, 4, 5, 6, 999.
<2> These signals are automatically interconnected for clock-cycle synchronous operation.

1	2	3	4	5	6	7	8
DO: SERVO					fp_2454_01_eng.vsd	Function diagram	- 2454 -
PROFIBUS - ZSW2 status word interconnection (p2038 = 0)					20.06.05 V02.03.00	SINAMICS S	

Figure 2-48 2454 – ZSW2 status word interconnection (p2038 = 0)

© Siemens AG, 2005. All rights reserved

PROFIBUS sampling time
Refer to [1020.7]

Signal sources for ZSW2 (Interface Mode SIMODRIVE 611 universal, p2038 = 1) <1>

	Signal	Meaning	Interconnection parameters	[Function diagram] Internal status word	[Function diagram] Signal source	Inverted
	ZSW2.0	**1 = Drive data set DDS effective, bit 0**	p2081[0] = r0051.0	-	[8565]	-
	ZSW2.1	**1 = Drive data set DDS effective, bit 1**	p2081[1] = r0051.1	-	[8565]	-
	ZSW2.2	**1 = Drive data set DDS effective, bit 2**	p2081[2] = r0051.2	-	[8565]	-
	ZSW2.3	**Reserved**	-	-	-	-
	ZSW2.4	**1 = Ramp-function generator inactive** <3>	p2081[4] = r1199.2	-	[3060] [3080]	✔
	ZSW2.5	**1 = Open the holding brake**	p2081[5] = r0899.12	[2503.7]	[2701]	-
	ZSW2.6	**1 = Integrator inhibit, speed controller**	p2081[6] = r2093.6	-	[5040] [5210]	-
	ZSW2.7	**1 = Parking axis active**	p2081[7] = r0896.0	-	-	-
	ZSW2.8	**1 = Traverse to fixed endstop**	p2081[8] = r1406.8	-	[2520]	-
	ZSW2.9	**1 = Drive data set DDS effective, bit 3**	p2081[9] = r0051.3	-	[8565]	-
	ZSW2.10	**1 = Drive data set DDS effective, bit 4**	p2081[10] = r0051.4	-	[8565]	-
	ZSW2.11	**1 = Data set changeover active**	p2081 [11] = r0835.0	-	-	-
<2>	ZSW2.12	**Slave sign-of-life bit 0**	Implicitly interconnected	-	-	-
	ZSW2.13	**Slave sign-of-life bit 1**	Implicitly interconnected	-	-	-
	ZSW2.14	**Slave sign-of-life bit 2**	Implicitly interconnected	-	-	-
	ZSW2.15	**Slave sign-of-life bit 3**	Implicitly interconnected	-	-	-

<1> Used in telegrams 2, 3, 4, 5, 6, 102, 103, 105, 106, 116, 999.
<2> These signals are automatically interconnected for clock-cycle synchronous operation.
<3> Only when the function module "expanded setpoint channel" is activated (r0108.8 = 1).

1	2	3	4	5	6	7	8
DO: SERVO					fp_2455_01_eng.vsd	Function diagram	- 2455 -
PROFIBUS - ZSW2 status word interconnection (p2038 = 1)					27.07.05 V02.03.00	SINAMICS S	

Figure 2-49 2455 – ZSW2 status word interconnection (p2038 = 1)

© Siemens AG, 2005. All rights reserved
SINAMICS S List Manual, Edition 06.2005

PROFIBUS sampling time
Refer to [1020.7]

Signal sources for MELDW

<1>

Signal	Meaning	Interconnection parameters	[Function diagram] Internal status word	[Function diagram] signal source	Inverted <2>
MELDW.0	**1 = Ramp-up/ramp-down completed 0 = Ramp-function generator active**	p2082[0] = r2199.5	[2537.7]	[8010]	-
MELDW.1	**1 = Torque utilization [%] < torque threshold value 2 (p2194)**	p2082[1] = r2199.11	[2537.7]	[8012]	-
MELDW.2	**1 = |n_act| < speed threshold value 3 (p2161)**	p2082[2] = r2199.0	[2537.7]	[8010]	-
MELDW.3	**1 = |n_act| £ speed threshold value 2 (p2155)**	p2082[3] = r2197.1	[2534.7]	[8010]	-
MELDW.4	**Reserved**	-	-	-	-
MELDW.5	**Reserved**	-	-	-	-
MELDW.6	**1 = Alarm motor overtemperature**	p2082[6] = r2135.14	[2548.7]	[8016]	✔
MELDW.7	**1 = Alarm, thermal overload, power module**	p2082[7] = r2135.15	[2548.7]	[8014]	✔
MELDW.8	**1 = Speed setpoint - actual value deviation within tolerance t_on**	p2082[8] = r2199.4	[2537.7]	[8010]	-
MELDW.9	**Reserved**	-	-	-	-
MELDW.10	**Reserved**	-	-	-	-
MELDW.11	**Reserved**	-	-	-	-
MELDW.12	**Reserved**	-	-	-	-
MELDW.13	**1 = Pulses enabled**	p2082[13] = r0899.11	[2503.7]	[2610]	-
MELDW.14	**Reserved**	-	-	-	-
MELDW.15	**Reserved**	-	-	-	-

<1> Used in telegrams 102, 103, 105, 106, 116, 999.
<2> The status word is generated using the binector-connector converter p2088[2].

1	2	3	4	5	6	7	8
DO: SERVO					fp_2456_01_eng.vsd	Function diagram	- 2456 -
PROFIBUS - MELDW status word interconnection					26.07.05 V02.03.00	SINAMICS S	

Figure 2-50 2456 – MELDW status word interconnection

© Siemens AG, 2005. All rights reserved
SINAMICS S List Manual, Edition 06.2005

PROFIBUS sampling time

Refer to [1020.7]

Signal sources for E_ZSW1 <1>

Signal	Meaning	Interconnection parameters	[Function diagram] signal source			[Function diagram] internal status word			Inverted
			A_INF	B_INF	S_INF	A_INF	B_INF	S_INF	
ZSW1.0	**1 = Ready to power-up**	p2080[0] = r0899.0	[8932]	[8732]	[8832]	[8926.7]	[8726.7]	[8826.7]	-
ZSW1.1	**1 = Ready to operate**	p2080[1] = r0899.1	[8932]	[8732]	[8832]	[8926.7]	[8726.7]	[8826.7]	-
ZSW1.2	**1 = Operation enabled**	p2080[2] = r0899.2	[8932]	[8732]	[8832]	[8926.7]	[8726.7]	[8826.7]	-
ZSW1.3	**1 = Fault present**	p2080[3] = r2139.3	[8060]			[2548.7]			-
ZSW1.4	**1 = No OFF2 effective**	p2080[4] = r0899.4	[8932]	[8732]	[8832]	[8926.7]	[8726.7]	[8826.7]	-
ZSW1.5	**Reserved**	-	-	-	-	-	-	-	-
ZSW1.6	**1 = Power-on inhibit**	p2080[6] = r0899.6	[8932]	[8732]	[8832]	[8926.7]	[8726.7]	[8826.7]	-
ZSW1.7	**1 = Alarm present**	p2080[7] = r2139.7	[8065]			[2548.7]			-
ZSW1.8	**Reserved**	-	-	-	-	-	-	-	-
ZSW1.9	**1 = PLC requests control** <2>	p2080[9] = r0899.9	[8926]	[8726]	[8826]	[8926.7]	[8726.7]	[8826.7]	-
ZSW1.10	**Reserved**	-	-	-	-	-	-	-	-
ZSW1.11	**1 = Pre-charging completed**	p2080[11] = r0899.11	[8950]	[8750]	[8850]	[8926.7]	[8726.7]	[8826.7]	-
ZSW1.12	**1 = Line contactor closed**	p2080[12] = r0899.12	[8934]	[8734]	[8834]	[8926.7]	[8726.7]	[8826.7]	-
ZSW1.13	**Reserved**	-	-	-	-	-	-	-	-
ZSW1.14	**Reserved**	-	-	-	-	-	-	-	-
ZSW1.15	**Reserved**	-	-	-	-	-	-	-	-

<1> Used in telegram 370. The master system requests process data.
<2> The master system requests the process data.

1	2	3	4	5	6	7	8
DO: A_INF, B_INF, S_INF					fp_2457_01_eng.vsd	Function diagram	- 2457 -
PROFIBUS - E_ZSW1 status word infeed interconnection					19.05.05 V02.03.00	SINAMICS S	

Figure 2-51 2457 – E_ZSW1 status word infeed interconnection

© Siemens AG, 2005. All rights reserved
SINAMICS S List Manual, Edition 06.2005

PROFIBUS sampling time
Refer to [1020.7]

Signal sources for CU_ZSW <1>

Signal	Meaning	Interconnection parameters	[Function diagram] Internal status word	[Function diagram] signal source	Inverted
CU_ZSW.0	**Reserved**	-	-	-	-
CU_ZSW.1	**Reserved**	-	-	-	-
CU_ZSW.2	**Reserved**	-	-	-	-
CU_ZSW.3	**Fault present**	p2081[3] = r2139.3	-	-	-
CU_ZSW.4	**Reserved**	-	-	-	-
CU_ZSW.5	**Reserved**	-	-	-	-
CU_ZSW.6	**Reserved**	-	-	-	-
CU_ZSW.7	**Alarm present**	p2081[7] = r2139.7	-	-	-
CU_ZSW.8	**Synchronisation (SYNC)**	p2081[8] = r0899.8	-	-	-
CU_ZSW.9	**Reserved**	-	-	-	-
CU_ZSW.10	**Reserved**	-	-	-	-
CU_ZSW.11	**Reserved**	-	-	-	-
CU_ZSW.12	**Slave-Sign-of-life Bit 0**	Implicitly interconnected	-	-	-
CU_ZSW.13	**Slave-Sign-of-life Bit 1**	Implicitly interconnected	-	-	-
CU_ZSW.14	**Slave-Sign-of-life Bit 2**	Implicitly interconnected	-	-	-
CU_ZSW.15	**Slave-Sign-of-life Bit 3**	Implicitly interconnected	-	-	-

<1> Used in telegram 390, 391 and 999.

1	2	3	4	5	6	7	8
DO: CU_S					fp_2458_01_eng.vsd	Function diagram	- 2458 -
PROFIBUS - CU_ZSW status word Control Unit interconnection					27.07.05 V02.03.00	SINAMICS S	

Figure 2-52 2458 – CU_ZSW status word interconnection

© Siemens AG, 2005. All rights reserved
SINAMICS S List Manual, Edition 06.2005

PROFIBUS sampling time
Refer to [1020.7]

Signal targets for E_DIGITAL <1>

Signal	Meaning	Interconnection parameters <3>	[Function diagram] Internal status word	[Function diagram] Signal target	Inverted
E_DIGITAL.0	**Digital Input 8 (DI/DO8)** <2>	p2082[0] = r0722[8]	-	-	-
E_DIGITAL.1	**Digital Input 9 (DI/DO9)** <2>	p2082[1] = r0722[9]	-	-	-
E_DIGITAL.2	**Digital Input 10 (DI/DO10)** <2>	p2082[2] = r0722[10]	-	-	-
E_DIGITAL.3	**Digital Input 11 (DI/DO11)** <2>	p2082[3] = r0722[11]	-	-	-
E_DIGITAL.4	**Digital Input 12 (DI/DO12)** <2>	p2082[4] = r0722[12]	-	-	-
E_DIGITAL.5	**Digital Input 13 (DI/DO13)** <2>	p2082[5] = r0722[13]	-	-	-
E_DIGITAL.6	**Digital Input 14 (DI/DO14)** <2>	p2082[6] = r0722[14]	-	-	-
E_DIGITAL.7	**Digital Input 15 (DI/DO15)** <2>	p2082[7] = r0722[15]	-	-	-
E_DIGITAL.8	**Digital Input 0 (DI0)**	p2082[8] = r0722[0]	-	-	-
E_DIGITAL.9	**Digital Input 1 (DI1)**	p2082[9] = r0722[1]	-	-	-
E_DIGITAL.10	**Digital Input 2 (DI2)**	p2082[10] = r0722[2]	-	-	-
E_DIGITAL.11	**Digital Input 3 (DI3)**	p2082[11] = r0722[3]	-	-	-
E_DIGITAL.12	**Digital Input 4 (DI4)**	p2082[12] = r0722[4]	-	-	-
E_DIGITAL.13	**Digital Input 5 (DI5)**	p2082[13] = r0722[5]	-	-	-
E_DIGITAL.14	**Digital Input 6 (DI6)**	p2082[14] = r0722[6]	-	-	-
E_DIGITAL.15	**Digital Input 7 (DI7)**	p2082[15] = r0722[7]	-	-	-

<1> Used in telegram 390, 391 and 999.
<2> Can be parameterized via p0728 either as input (DI) or as output (DO).
<3> Initialization alterable.

1	2	3	4	5	6	7	8
DO: CU_S					fp_2459_01_eng.vsd	Function diagram	- 2459 -
PROFIBUS - E_DIGITAL interconnection					27.07.05 V02.03.00	SINAMICS S	

Figure 2-53 2459 – E_DIGITAL interconnection

© Siemens AG, 2005. All rights reserved
SINAMICS S List Manual, Edition 06.2005

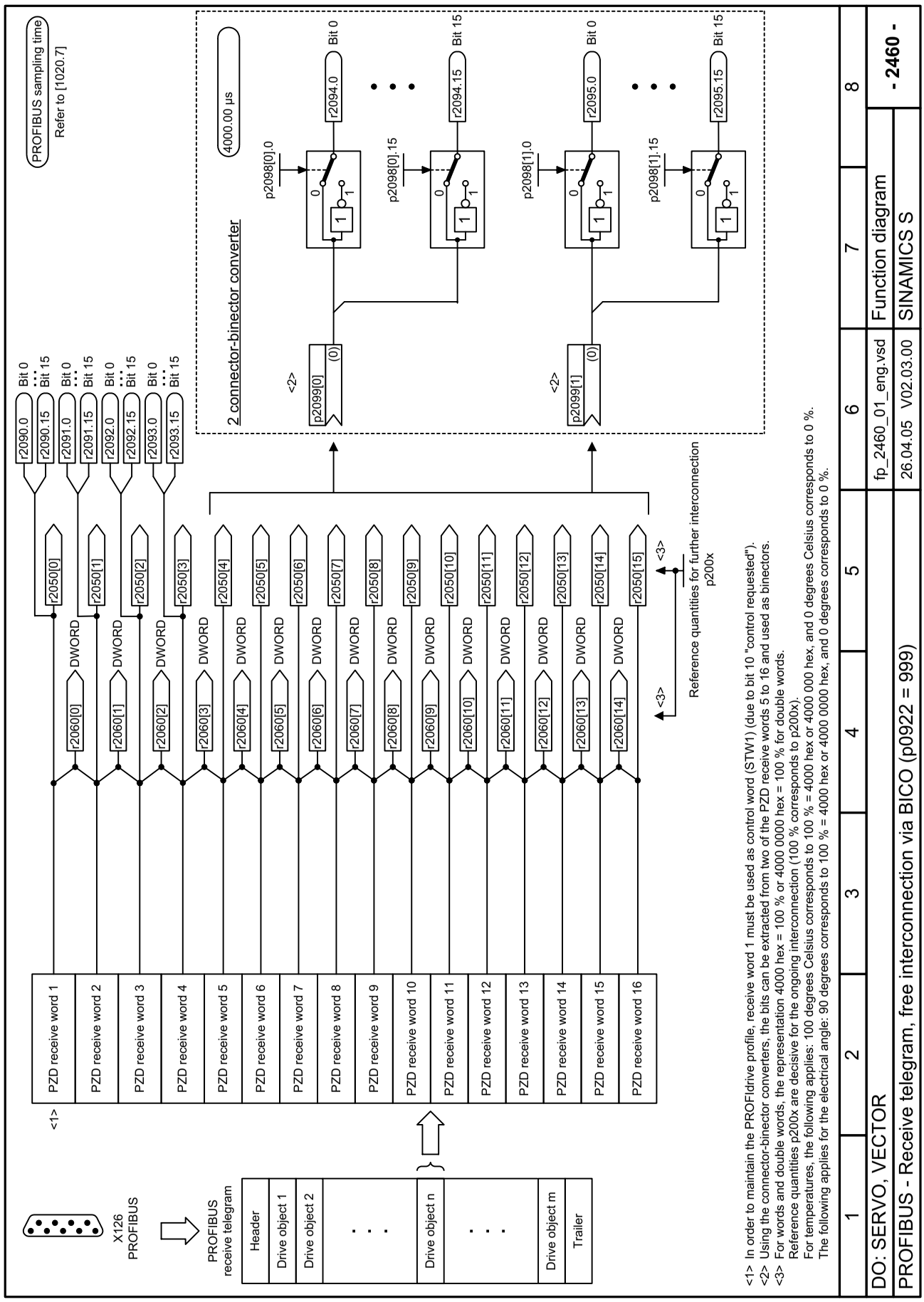

Figure 2-54 2460 – Receive telegram, free interconnection via BICO (p0922 = 999)

© Siemens AG, 2005. All rights reserved

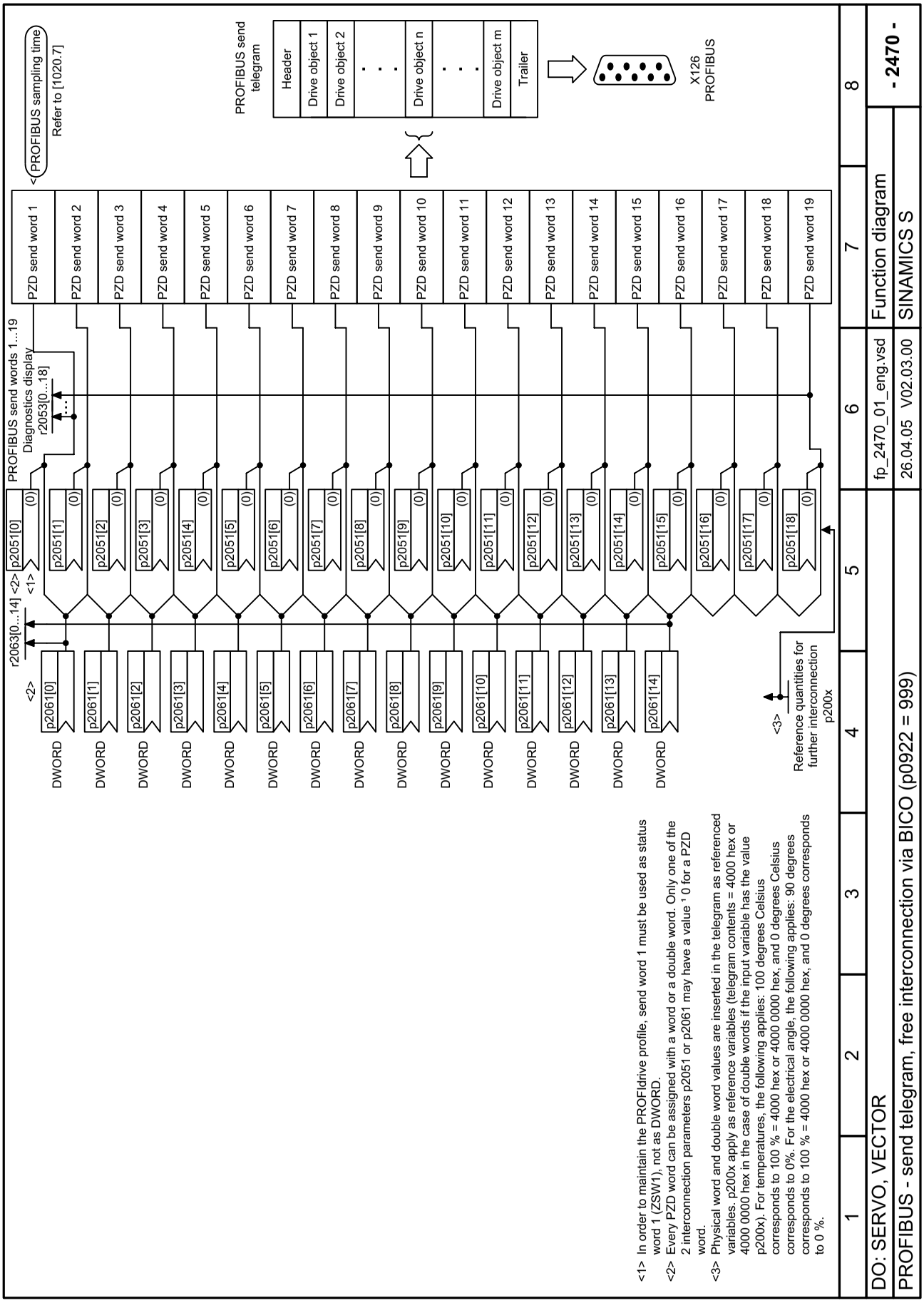

Figure 2-55 2470 – Send telegram, free interconnection via BICO (p0922 = 999)

© Siemens AG, 2005. All rights reserved

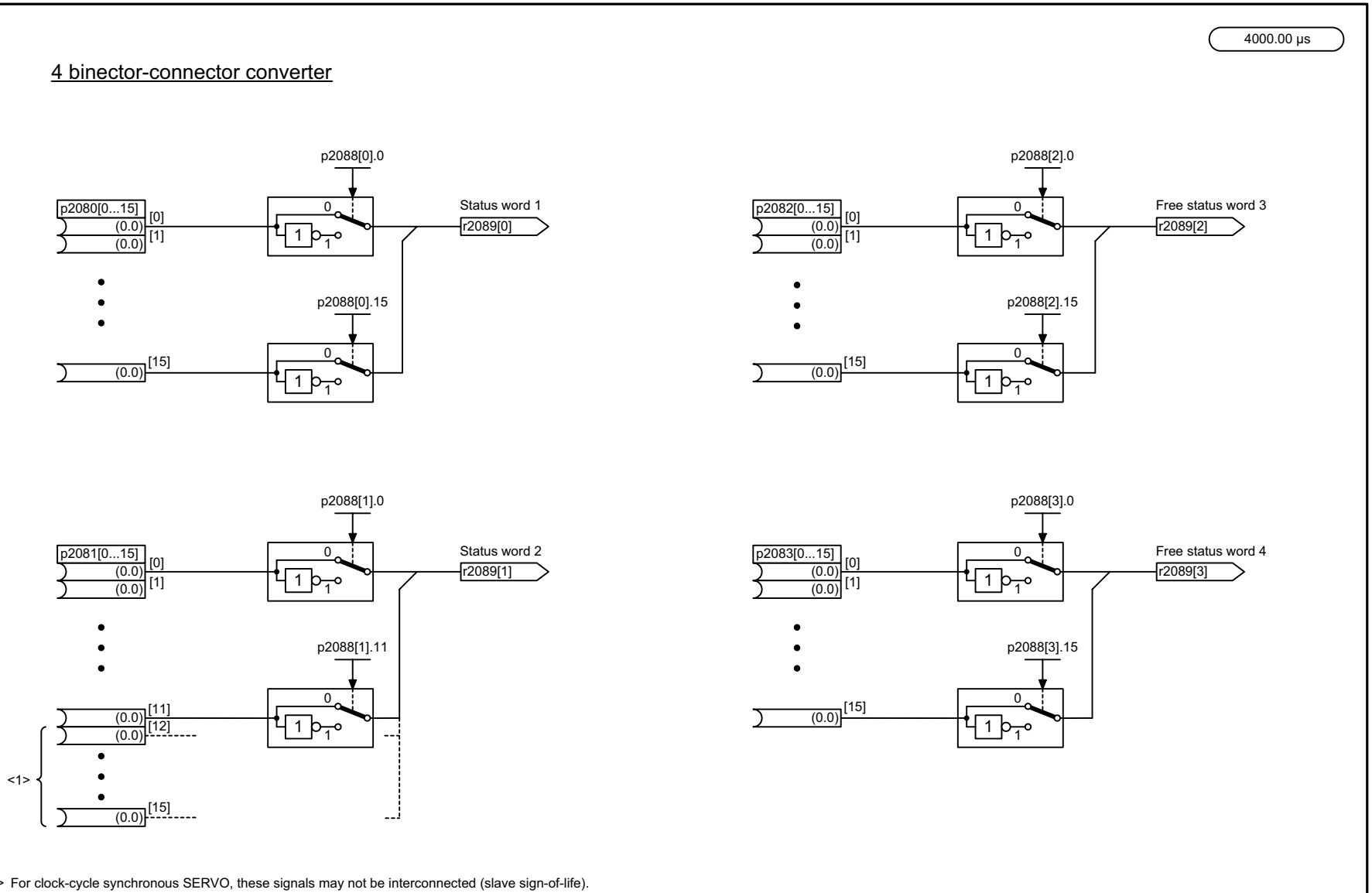

<1> For clock-cycle synchronous SERVO, these signals may not be interconnected (slave sign-of-life).

1	2	3	4	5	6	7	8
DO: A_INF, B_INF, S_INF, CU_S, SERVO, TB30, TM31, VECTOR					fp_2472_01_eng.vsd	Function diagram	- 2472 -
PROFIBUS - status words, free interconnection					15.07.05 V02.03.00	SINAMICS S	

Figure 2-56 2472 – Status words, free interconnection

© Siemens AG, 2005. All rights reserved
SINAMICS S List Manual, Edition 06.2005

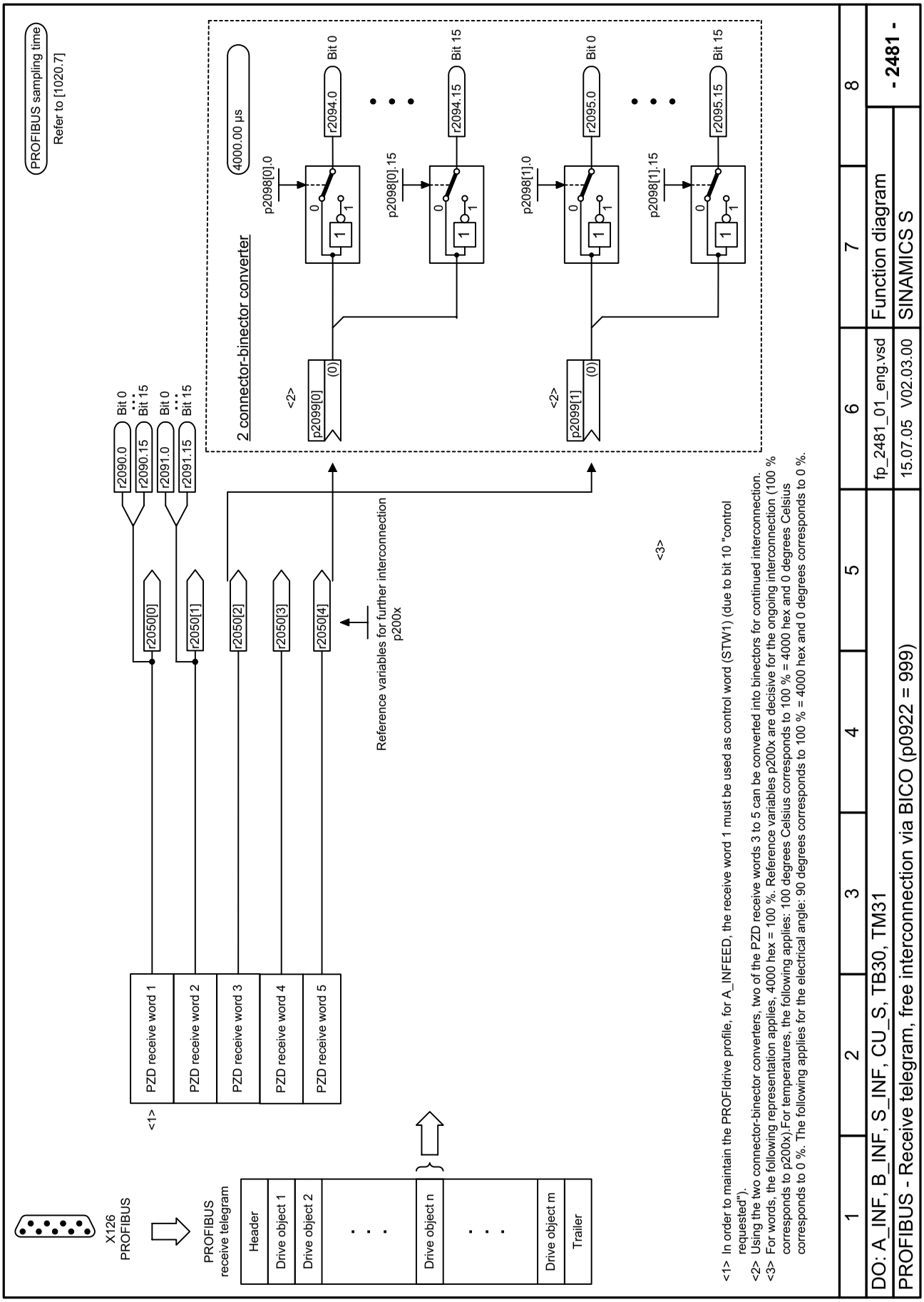

Figure 2-57 2481 – Receive telegram, free interconnection via BICO (p0922 = 999)

© Siemens AG, 2005. All rights reserved
SINAMICS S List Manual, Edition 06.2005

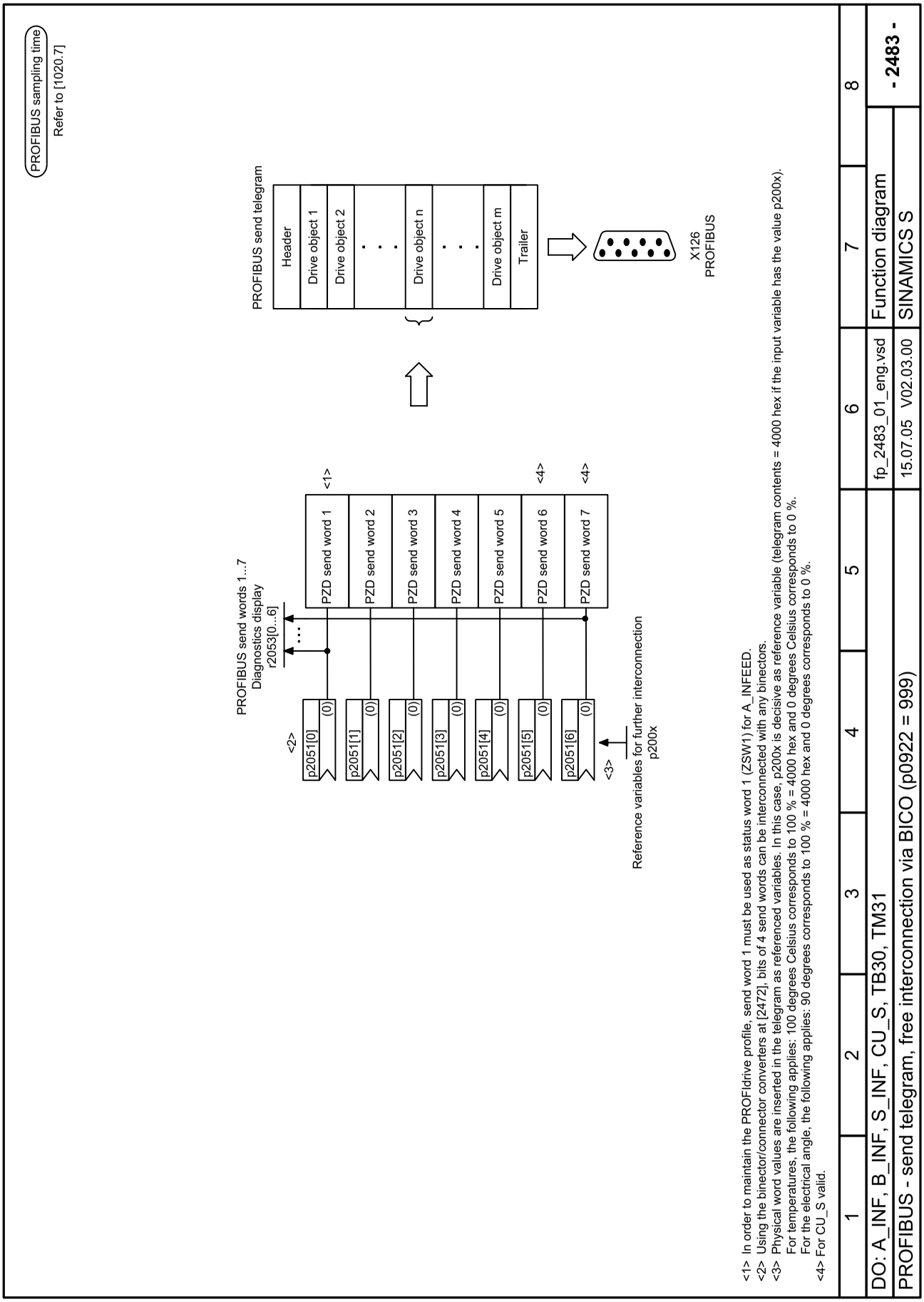

Figure 2-58 2483 – Send telegram, free interconnection via BICO (p0922 = 999)

© Siemens AG, 2005. All rights reserved

2.7 Internal control/status words

Function diagrams

2501 – Control word sequential control	2-783
2503 – Status word sequential control	2-784
2505 – Control word setpoint channel	2-785
2520 – Control word speed controller	2-786
2522 – Status word speed controller	2-787
2534 – Status word monitoring 1	2-788
2536 – Status word monitoring 2	2-789
2537 – Status word monitoring 3	2-790
2546 – Control word faults/alarms	2-791
2548 – Status word, faults/warnings 1 and 2	2-792

© Siemens AG, 2005. All rights reserved

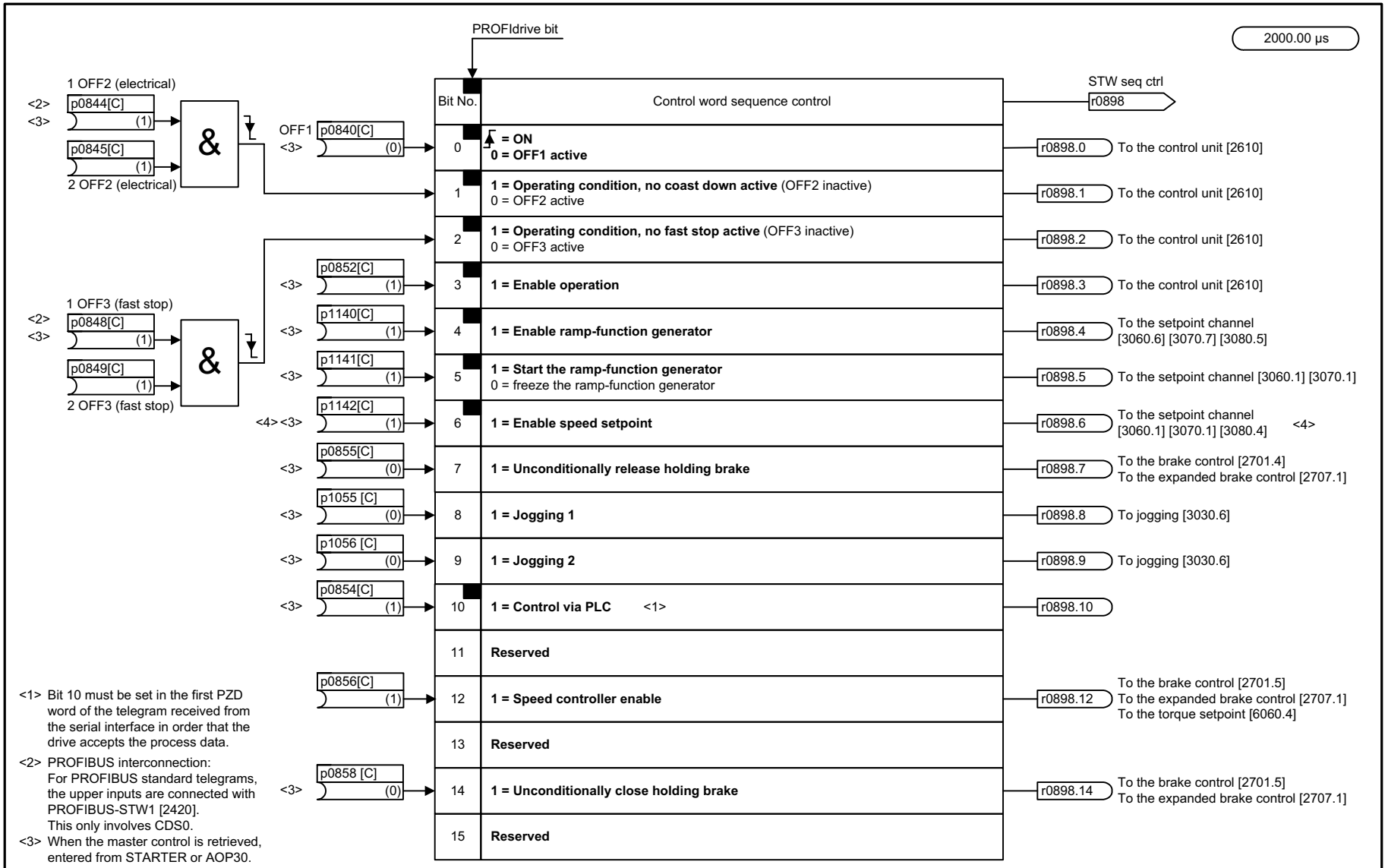

1	2	3	4	5	6	7	8
DO: SERVO, VECTOR					fp_2501_01_eng.vsd	Function diagram	- 2501 -
Internal control/status words, control word sequence control					21.06.05 V02.03.00	SINAMICS S	

Figure 2-59 2501 – Control word sequential control

© Siemens AG, 2005. All rights reserved
SINAMICS S List Manual, Edition 06.2005

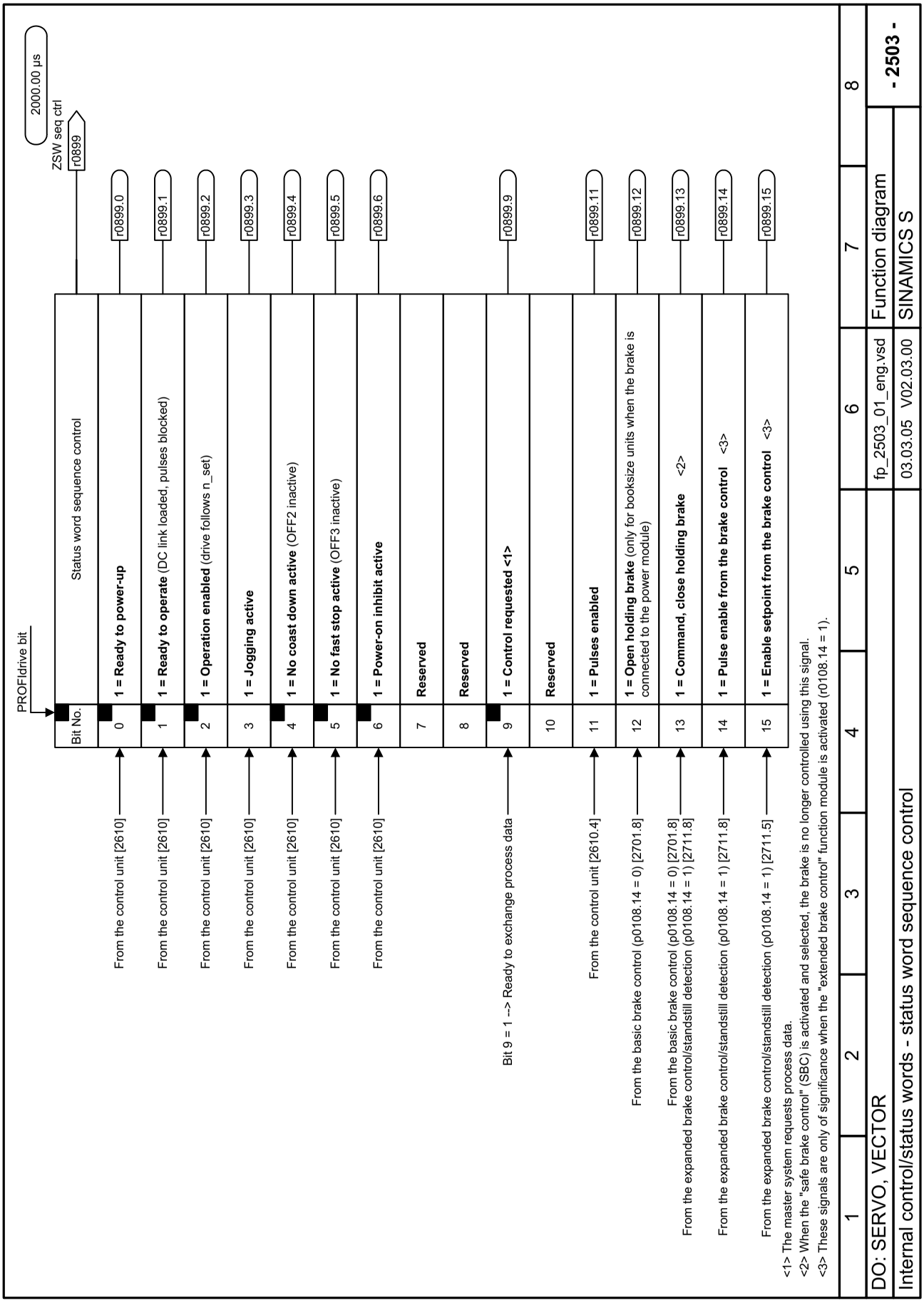

Figure 2-60 2503 – Status word sequential control

© Siemens AG, 2005. All rights reserved

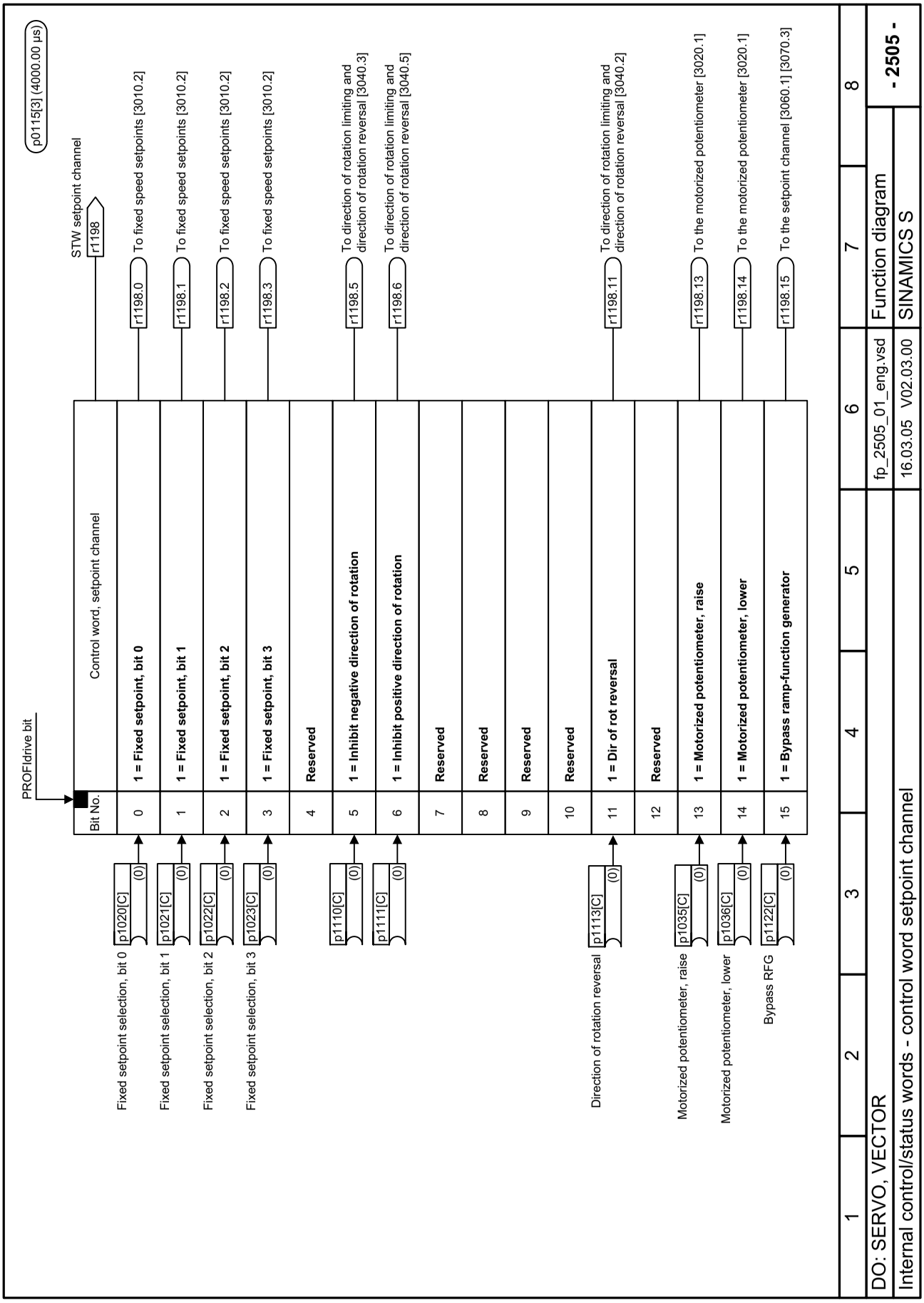

Figure 2-61 2505 – Control word setpoint channel

© Siemens AG, 2005. All rights reserved

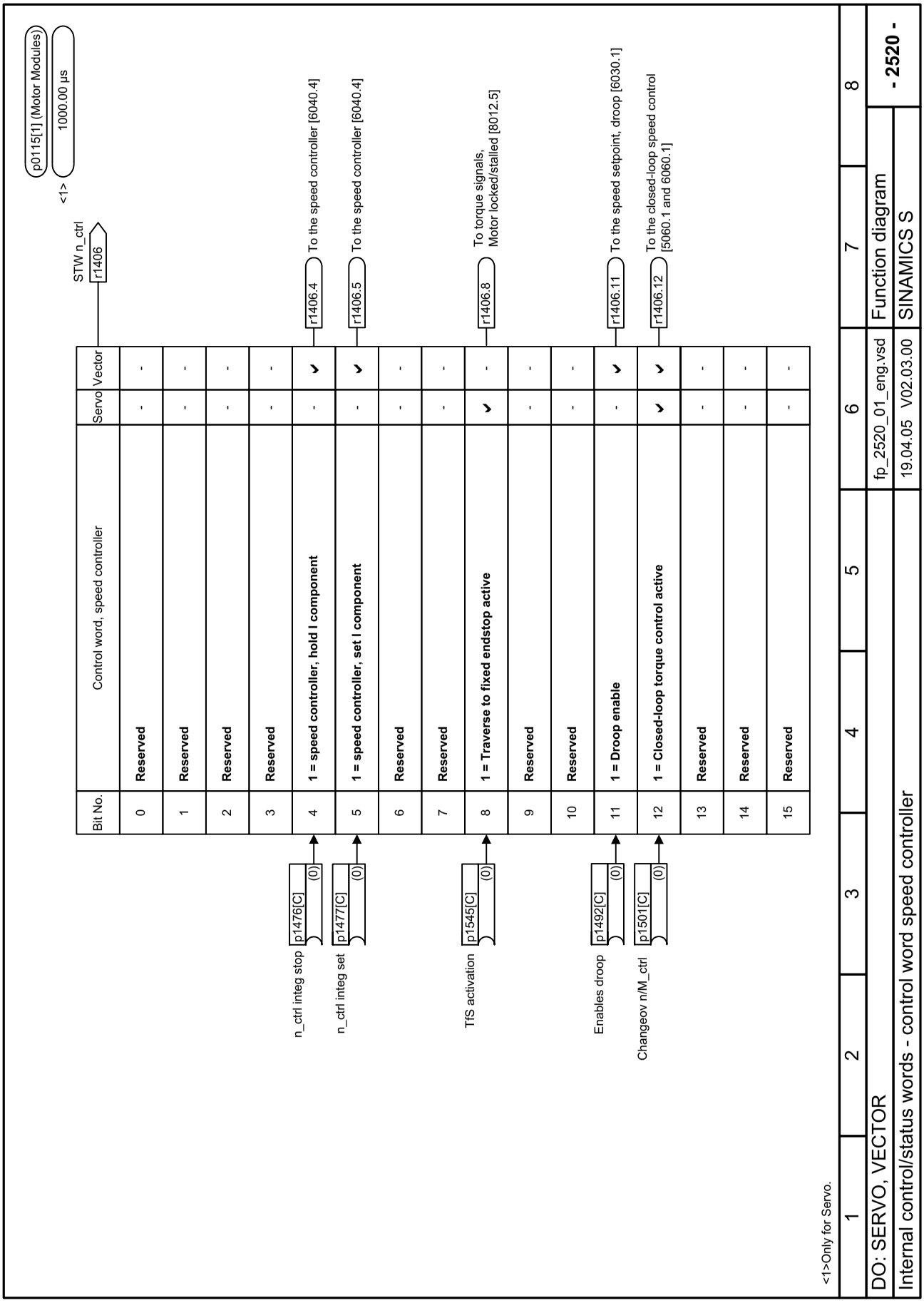

Figure 2-62 2520 – Control word speed controller

© Siemens AG, 2005. All rights reserved
SINAMICS S List Manual, Edition 06.2005

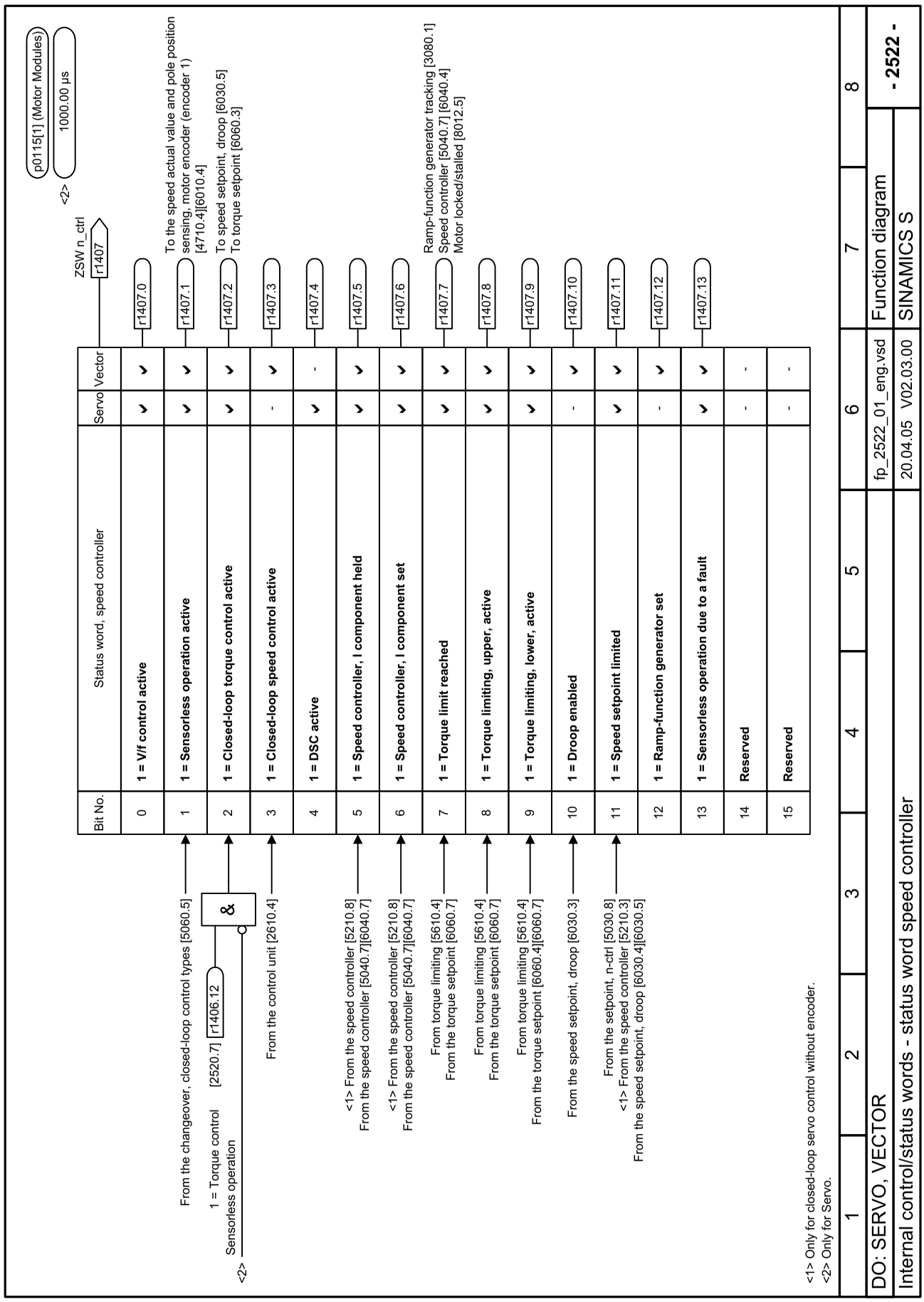

Figure 2-63 2522 – Status word speed controller

© Siemens AG, 2005. All rights reserved

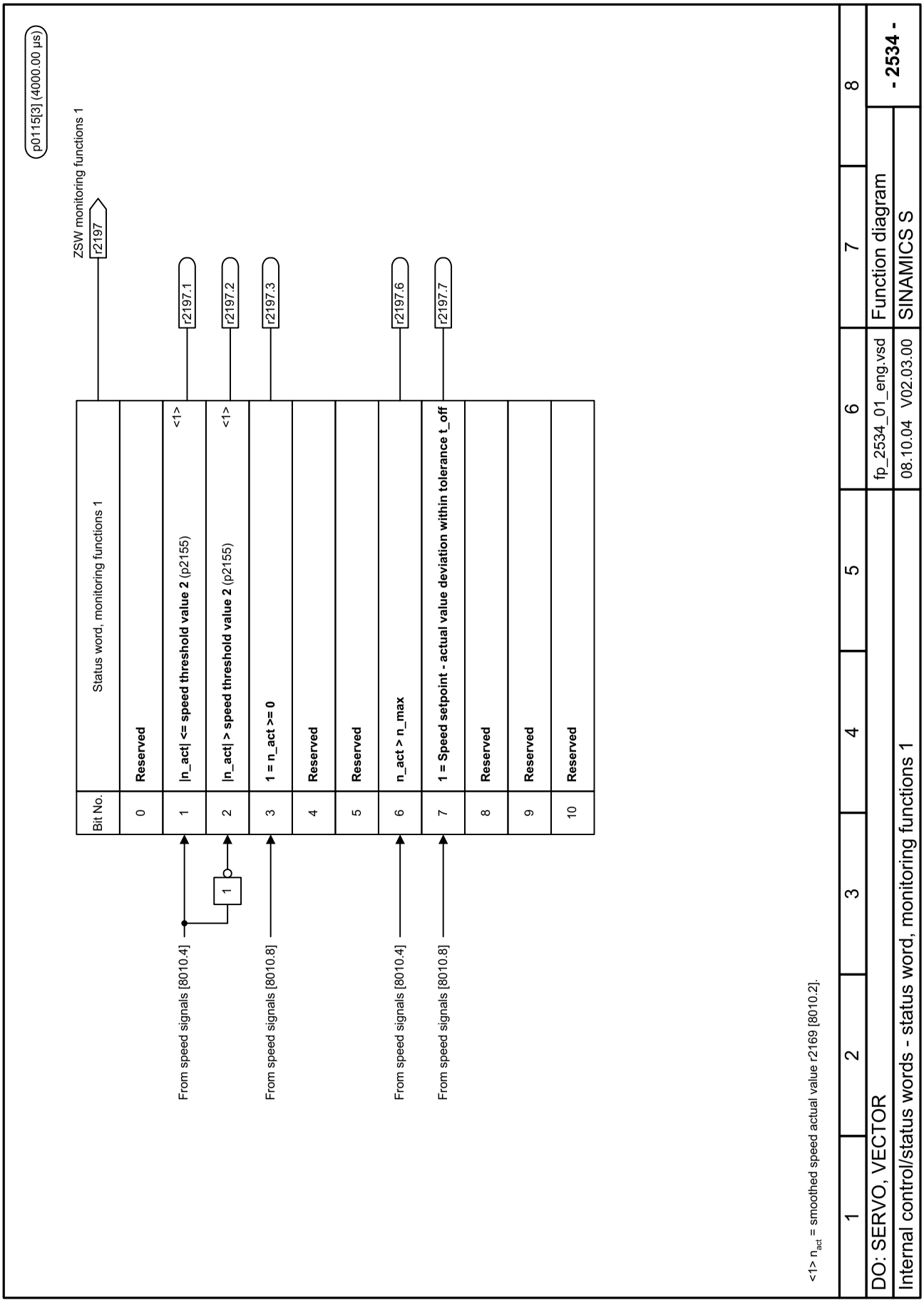

Figure 2-64 2534 – Status word monitoring 1

© Siemens AG, 2005. All rights reserved
SINAMICS S List Manual, Edition 06.2005

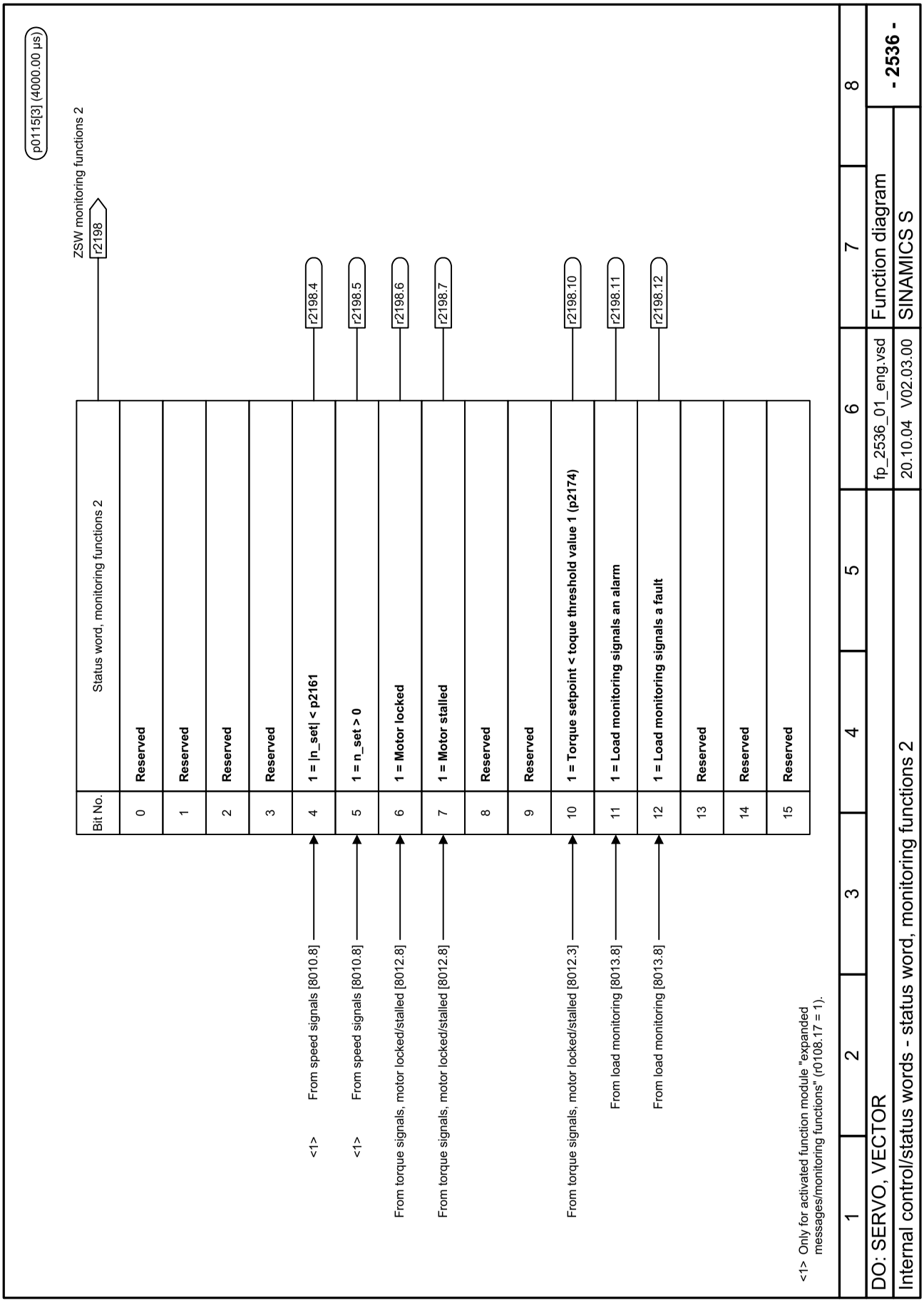

Figure 2-65 2536 – Status word monitoring 2

© Siemens AG, 2005. All rights reserved

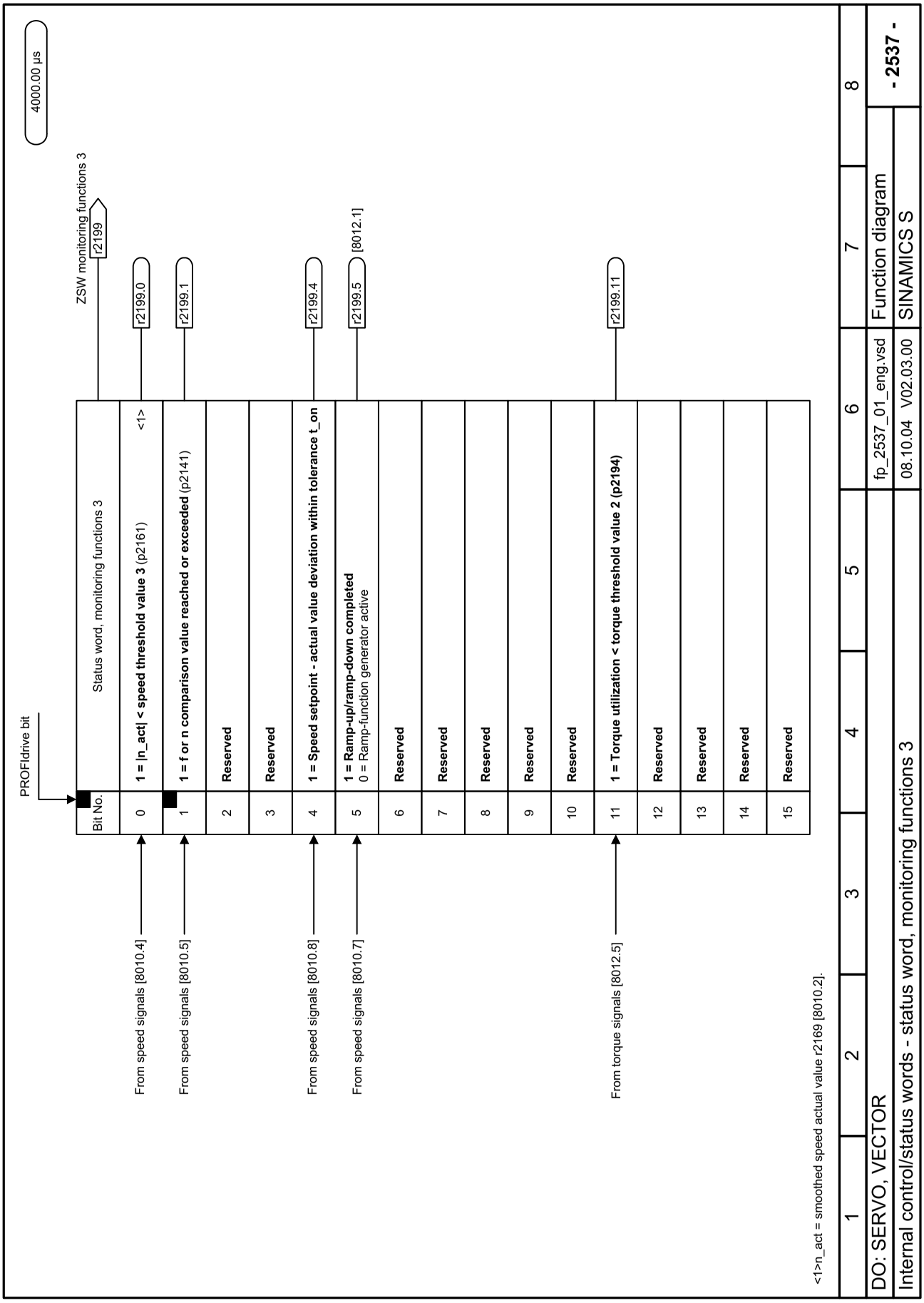

Figure 2-66 2537 – Status word monitoring 3

© Siemens AG, 2005. All rights reserved
SINAMICS S List Manual, Edition 06.2005

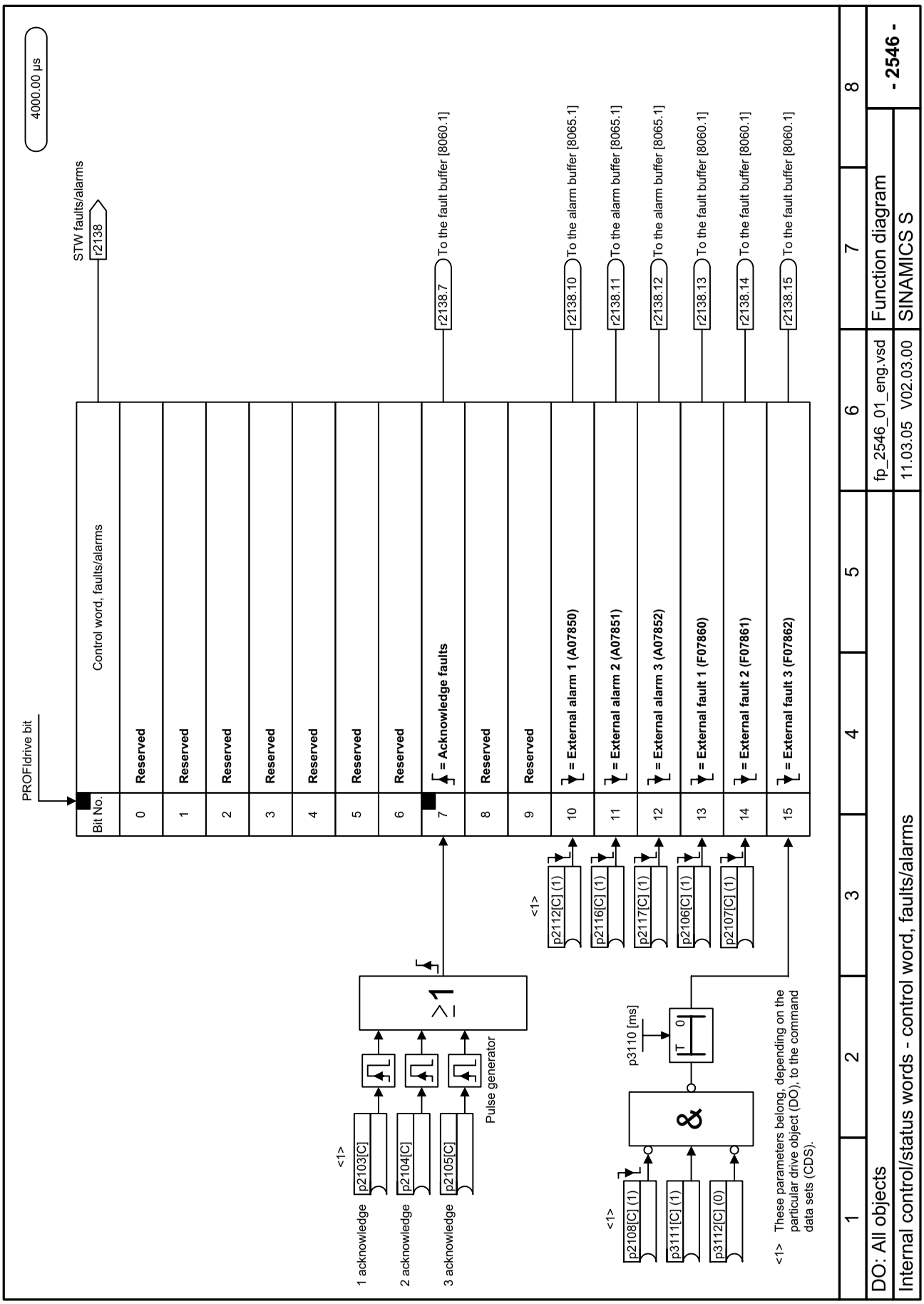

Figure 2-67 2546 – Control word faults/alarms

© Siemens AG, 2005. All rights reserved

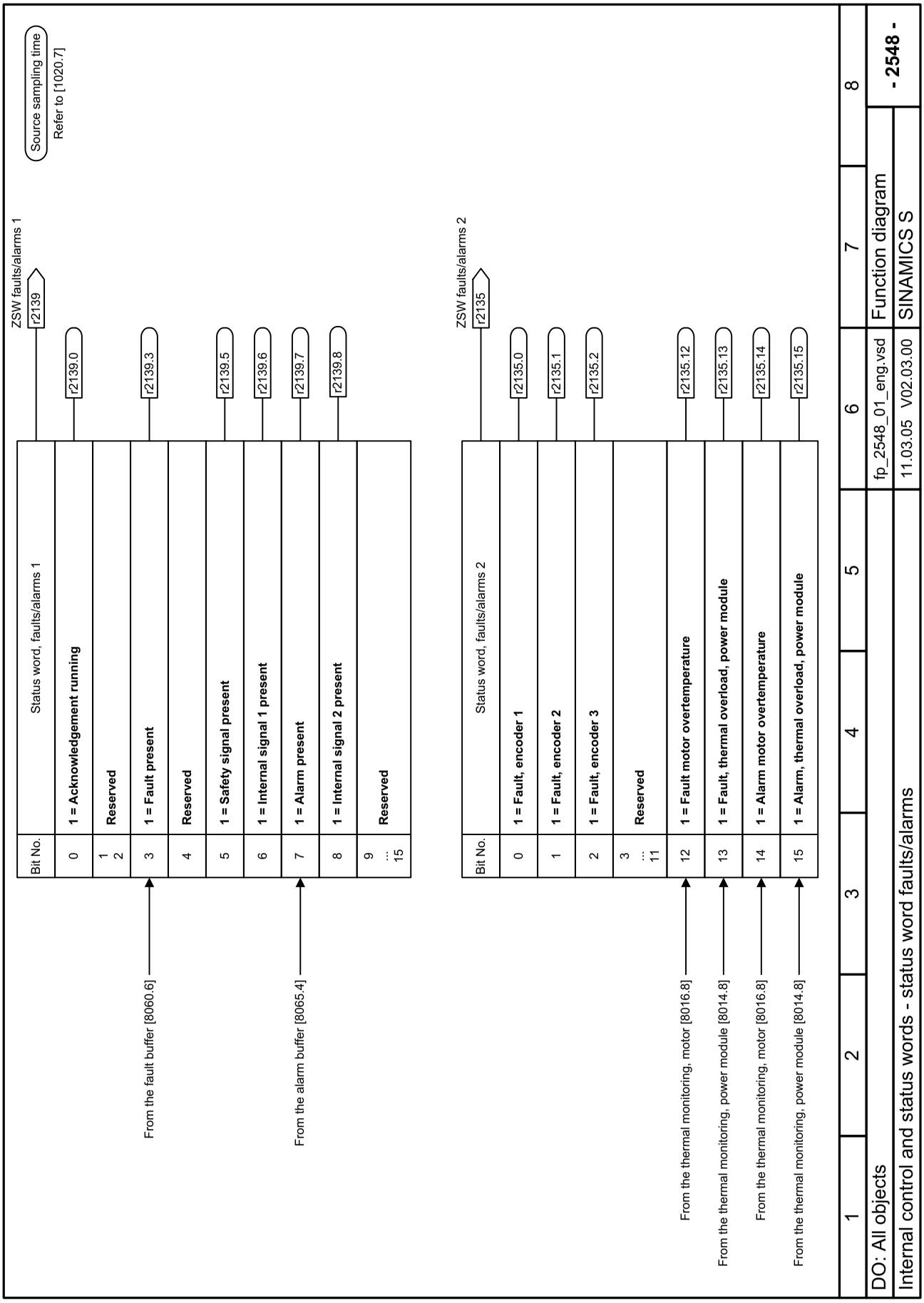

Figure 2-68 2548 – Status word, faults/warnings 1 and 2

© Siemens AG, 2005. All rights reserved
SINAMICS S List Manual, Edition 06.2005

2.8 Sequence control

Function diagrams

2610 – Processor	2-794
2634 – Missing enable signals, line contactor control	2-795

© Siemens AG, 2005. All rights reserved

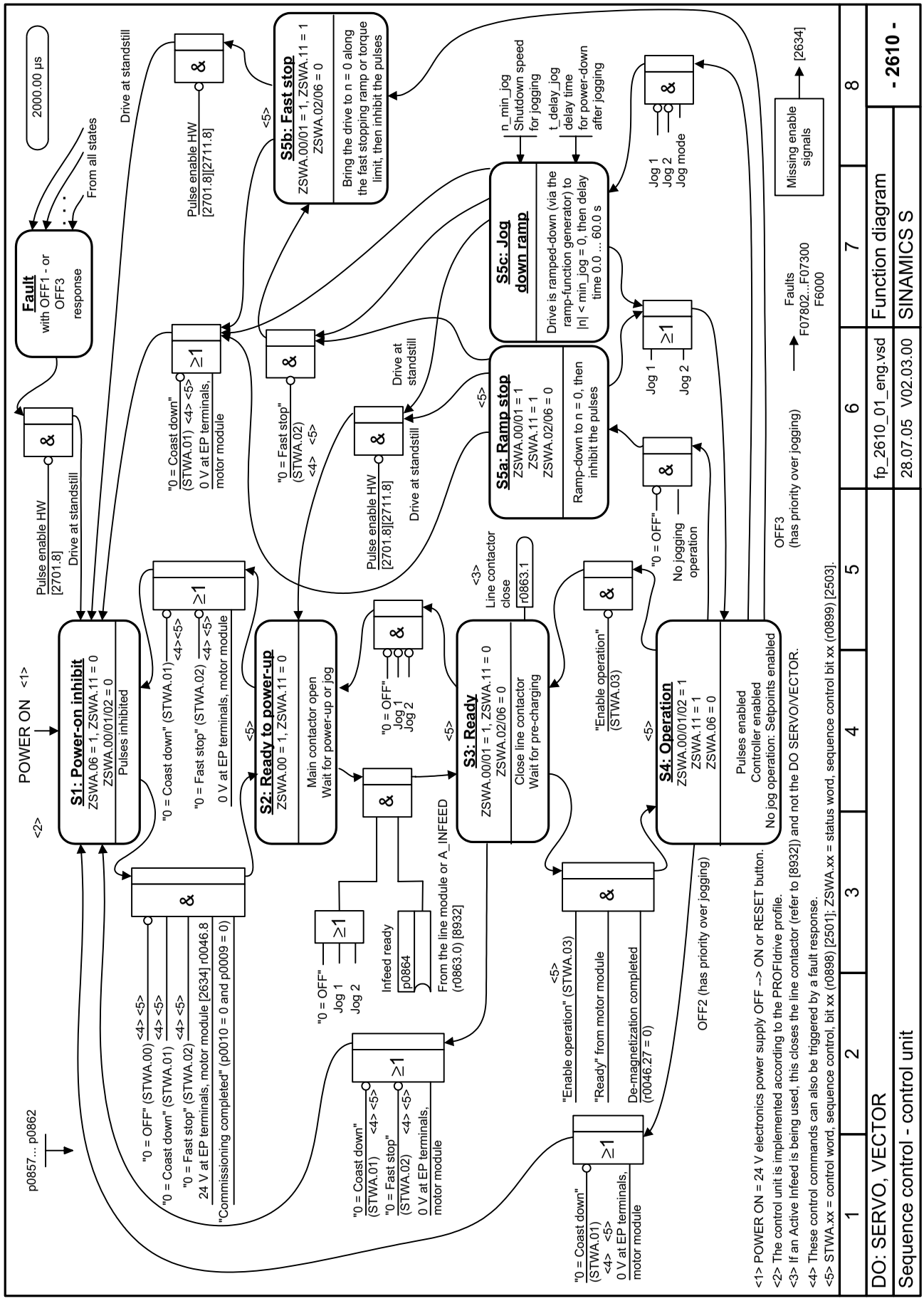

Figure 2-69 2610 – Processor

© Siemens AG, 2005. All rights reserved
SINAMICS S List Manual, Edition 06.2005

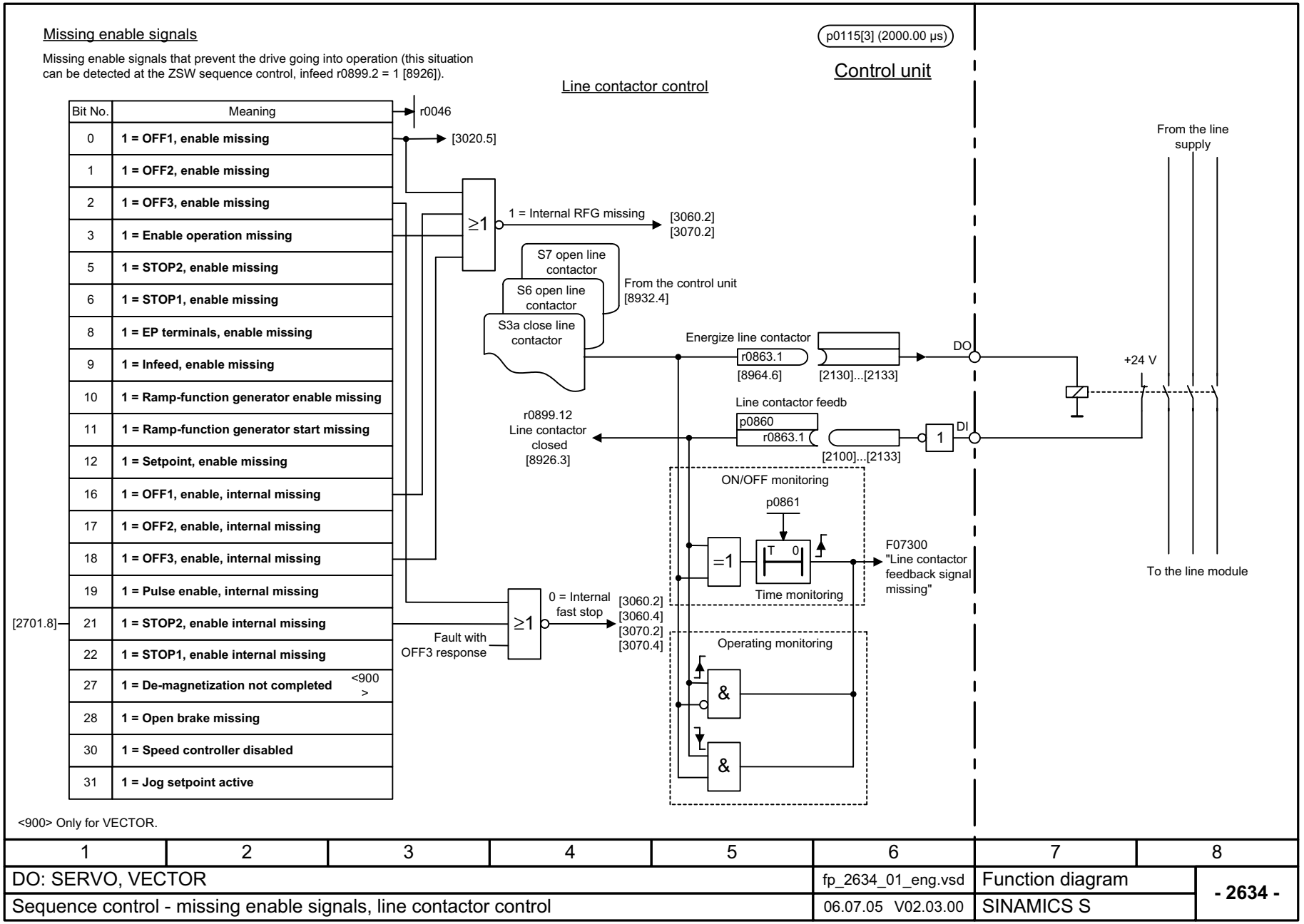

1	2	3	4	5	6	7	8
DO: SERVO, VECTOR					fp_2634_01_eng.vsd	Function diagram	- 2634 -
Sequence control - missing enable signals, line contactor control					06.07.05 V02.03.00	SINAMICS S	

Figure 2-70 2634 – Missing enable signals, line contactor control

© Siemens AG, 2005. All rights reserved
SINAMICS S List Manual, Edition 06.2005

2.9 Brake control

Function diagrams

2701 – Simple brake control (r0108.14 = 0)	2-797
2704 – Extended brake control/zero speed detection (r0108.14 = 1)	2-798
2707 – Extended braking control / open and close brake (r0108.14 = 1)	2-799
2711 – Extended brake control/signal outputs (r0108.14 = 1)	2-800

© Siemens AG, 2005. All rights reserved

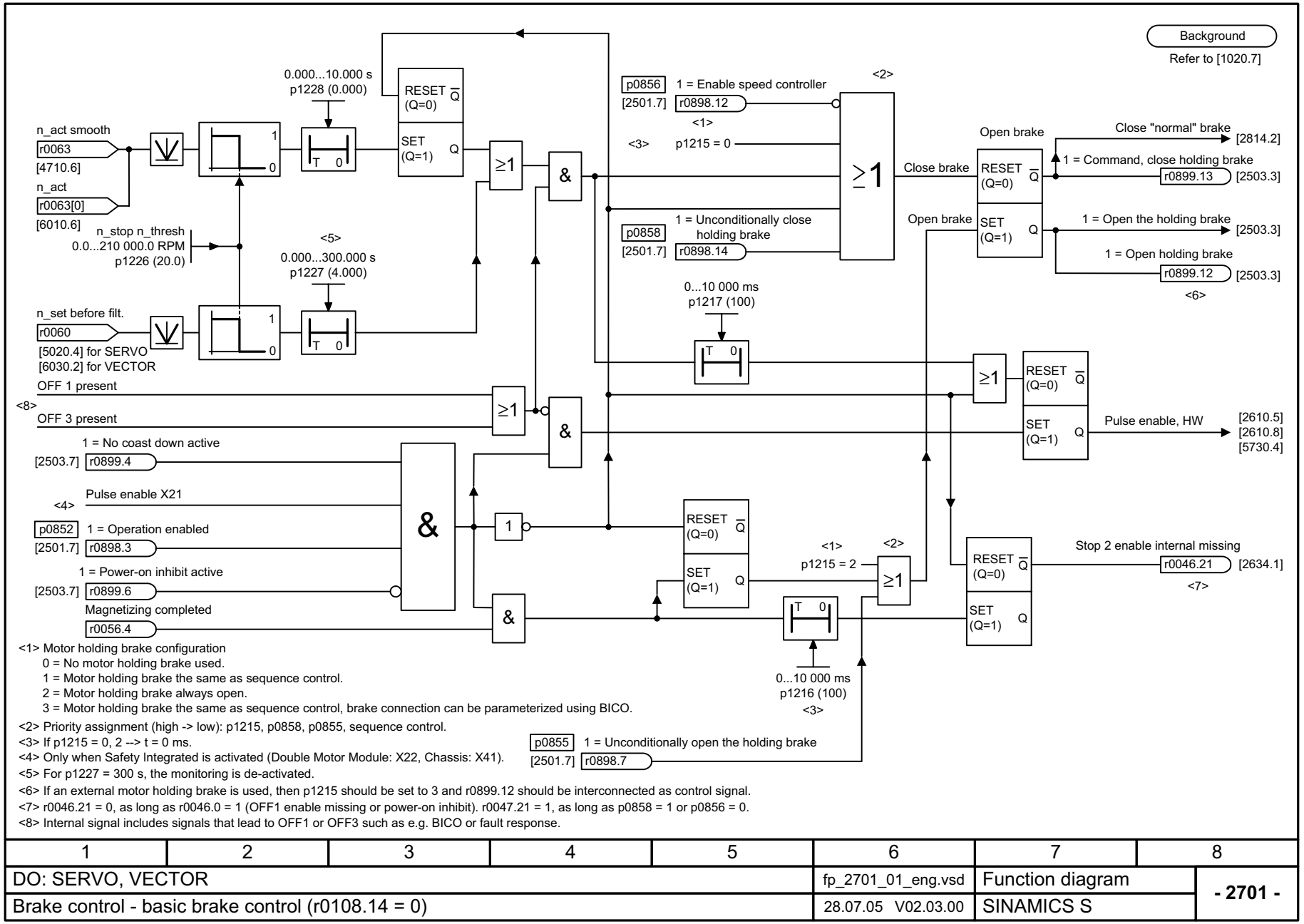

<1> Motor holding brake configuration
0 = No motor holding brake used.
1 = Motor holding brake the same as sequence control.
2 = Motor holding brake always open.
3 = Motor holding brake the same as sequence control, brake connection can be parameterized using BICO.

<2> Priority assignment (high -> low): p1215, p0858, p0855, sequence control.
<3> If p1215 = 0, 2 --> t = 0 ms.
<4> Only when Safety Integrated is activated (Double Motor Module: X22, Chassis: X41).
<5> For p1227 = 300 s, the monitoring is de-activated.
<6> If an external motor holding brake is used, then p1215 should be set to 3 and r0899.12 should be interconnected as control signal.
<7> r0046.21 = 0, as long as r0046.0 = 1 (OFF1 enable missing or power-on inhibit). r0047.21 = 1, as long as p0858 = 1 or p0856 = 0.
<8> Internal signal includes signals that lead to OFF1 or OFF3 such as e.g. BICO or fault response.

1	2	3	4	5	6	7	8
DO: SERVO, VECTOR					fp_2701_01_eng.vsd	Function diagram	- 2701 -
Brake control - basic brake control (r0108.14 = 0)					28.07.05 V02.03.00	SINAMICS S	

Figure 2-71 2701 – Simple brake control (r0108.14 = 0)

© Siemens AG, 2005. All rights reserved
SINAMICS S List Manual, Edition 06.2005

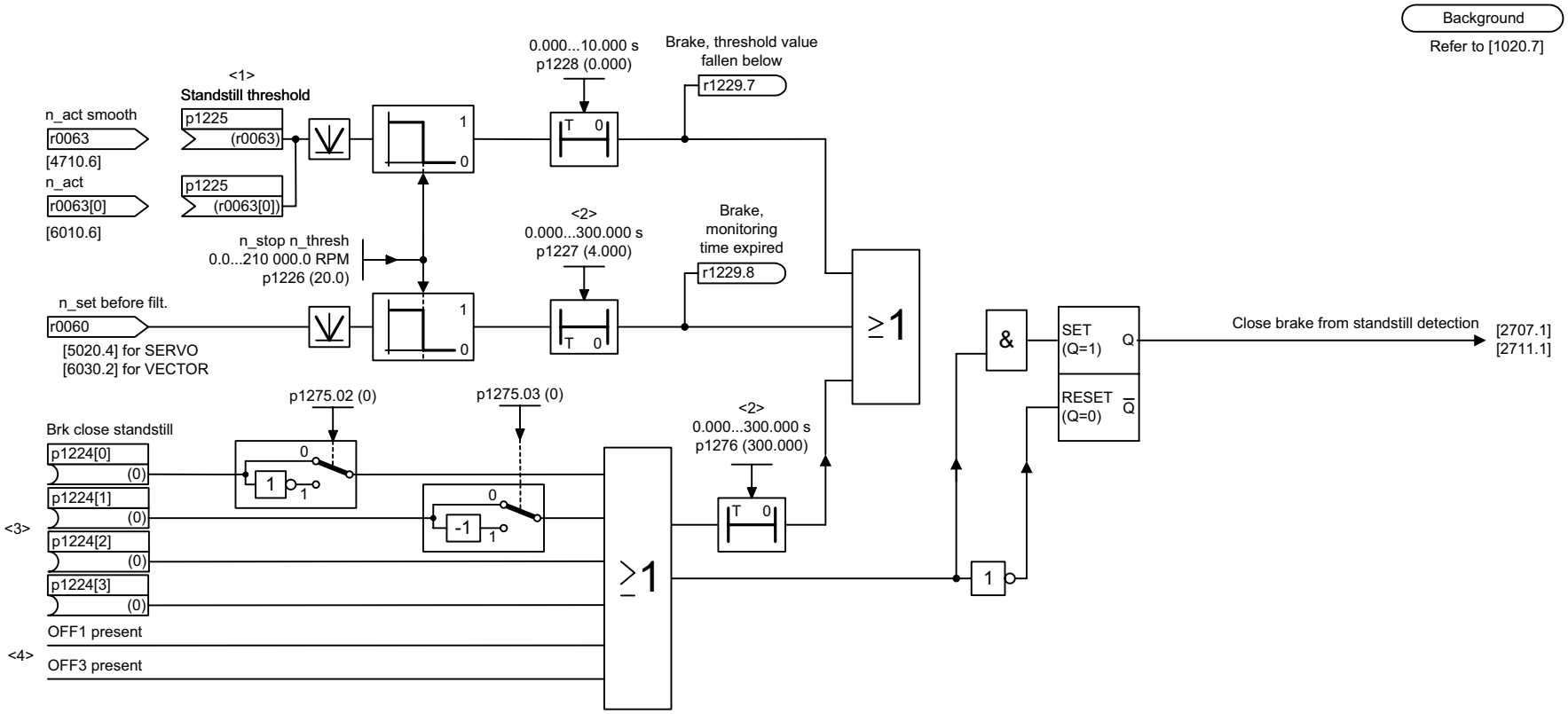

Figure 2-72 2704 – Extended brake control/zero speed detection (r0108.14 = 1)

<1> Shutdown threshold of the standstill detection. Here (e.g. when using a brake), another criterion to cancel the pulses can be selected other than the speed actual value. Otherwise, we recommend that the factory setting is kept.

<2> For p1276 = 300.000 s, the timer is de-activated, i.e. the timer output is always 0. Note: When operating a motor with a brake, which may not be closed while the motor is rotating, then the monitoring time of both timers must be set to 300 s.

<3> For operation without brake, p1224[0...3] must be = 0 (factory setting) in order to avoid undesirable interaction with the sequence control.

<4> Internal signal contains signals that lead to OFF1 or OFF3 such as e.g. BICO or fault response.

1	2	3	4	5	6	7	8
DO: SERVO, VECTOR					fp_2704_01_eng.vsd	Function diagram	- 2704 -
Brake control - expanded brake control/standstill detection (r0108.14 = 1)					10.06.05 V02.03.00	SINAMICS S	

© Siemens AG, 2005. All rights reserved
SINAMICS S List Manual, Edition 06.2005

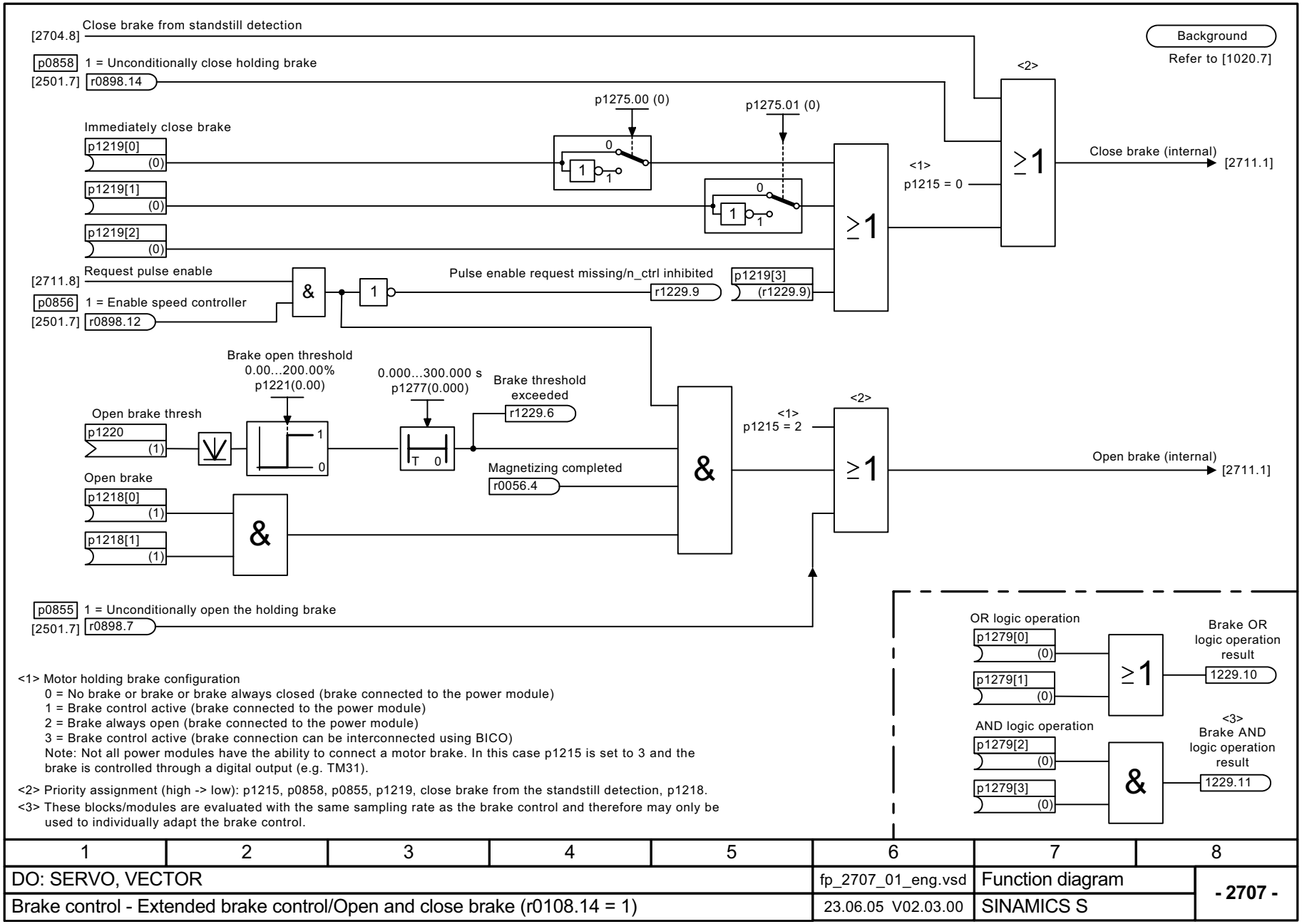

<1> Motor holding brake configuration
0 = No brake or brake or brake always closed (brake connected to the power module)
1 = Brake control active (brake connected to the power module)
2 = Brake always open (brake connected to the power module)
3 = Brake control active (brake connection can be interconnected using BICO)
Note: Not all power modules have the ability to connect a motor brake. In this case p1215 is set to 3 and the brake is controlled through a digital output (e.g. TM31).

<2> Priority assignment (high -> low): p1215, p0858, p0855, p1219, close brake from the standstill detection, p1218.

<3> These blocks/modules are evaluated with the same sampling rate as the brake control and therefore may only be used to individually adapt the brake control.

1	2	3	4	5	6	7	8
DO: SERVO, VECTOR					fp_2707_01_eng.vsd	Function diagram	- 2707 -
Brake control - Extended brake control/Open and close brake (r0108.14 = 1)					23.06.05 V02.03.00	SINAMICS S	

Figure 2-73 2707 – Extended braking control / open and close brake (r0108.14 = 1)

© Siemens AG, 2005. All rights reserved
SINAMICS S List Manual, Edition 06.2005

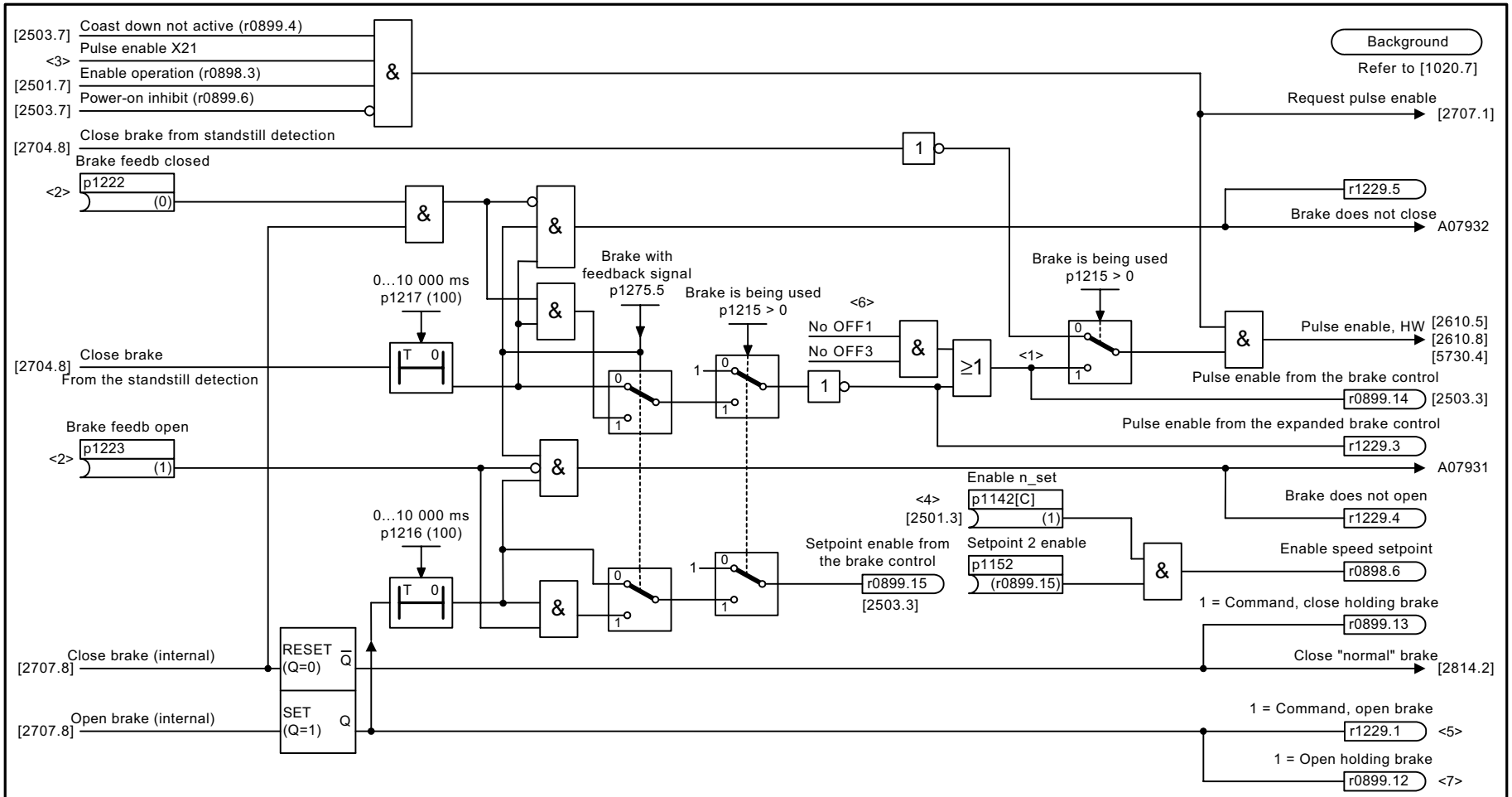

<1> This pulse enable path only works for operation with brake (p1215 > 0).
<2> When braking with a feedback signal, the inverted signal is interconnected to the BICO input for the second feedback signal. The brake switching times are set in p1216 and p1217.
<3> Only when Safety Integrated is activated (Double Motor Module: X22, Chassis: X41).
<4> When the master control is retrieved, entered from STARTER or AOP.
<5> If an external motor holding brake is used, then p1215 should be set to 3 and r1229.1 should be used as control signal.
<6> Internal signal contains signals that result in OFF1 or OFF3 such as e.g. BICO or fault response.
<7> When the function module "extended brake control" is activated (r0108.14 = 1), r1229.1 should be interconnected as control signal.

1	2	3	4	5	6	7	8
DO: SERVO, VECTOR					fp_2711_01_eng.vsd	Function diagram	- 2711 -
Brake control - extended brake control/signal outputs (r0108.14 = 1)					07.04.05 V02.03.00	SINAMICS S	

Figure 2-74 2711 – Extended brake control/signal outputs (r0108.14 = 1)

© Siemens AG, 2005. All rights reserved
SINAMICS S List Manual, Edition 06.2005

2.10 Safety Integrated

Function diagrams

2800 – Parameter manager	2-802
2802 – Monitoring and faults/alarms	2-803
2804 – Status words	2-804
2810 – Safe standstill (SH)	2-805
2814 – Safe brake control (SBC)	2-806

© Siemens AG, 2005. All rights reserved

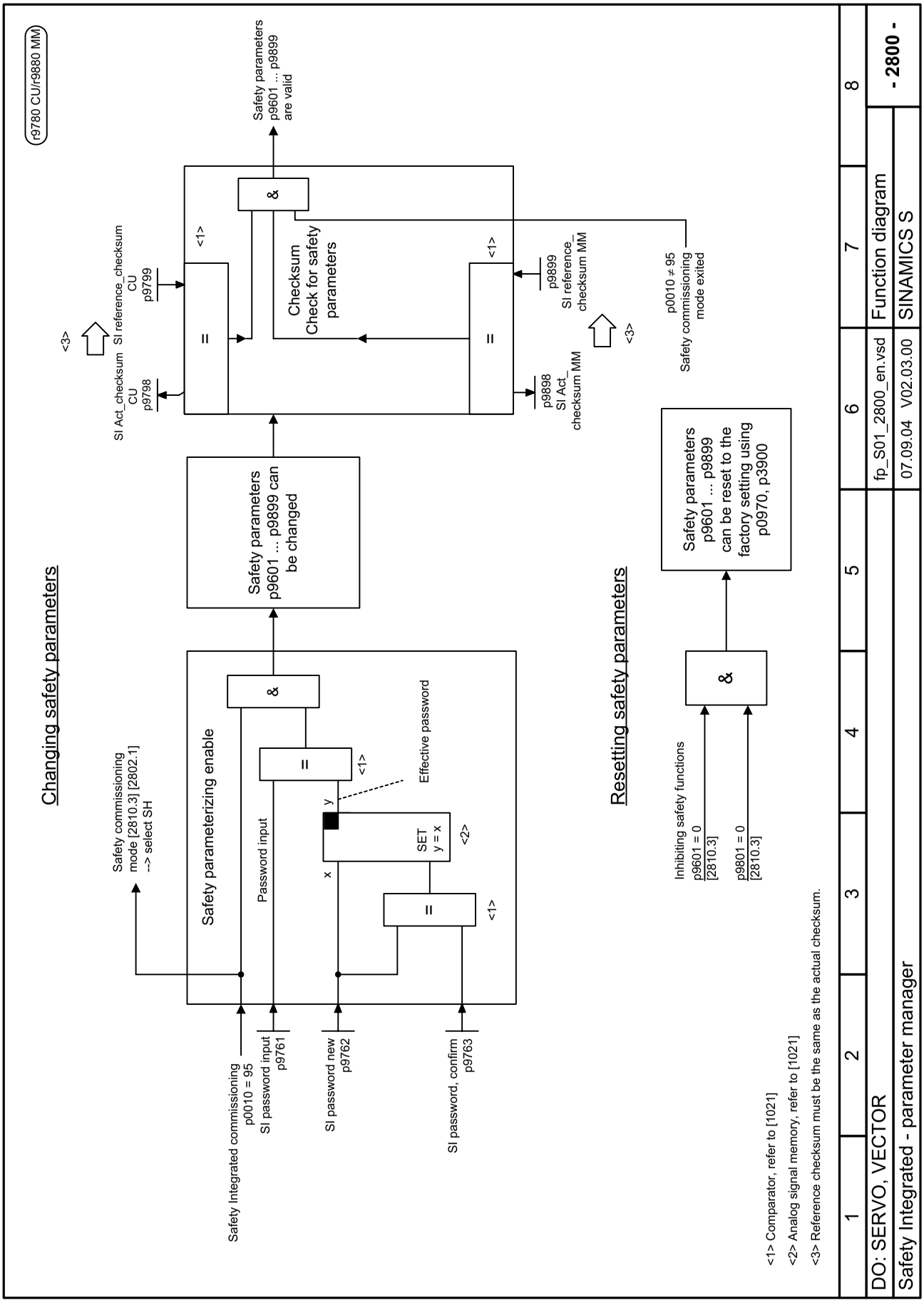

Figure 2-75 2800 – Parameter manager

© Siemens AG, 2005. All rights reserved
SINAMICS S List Manual, Edition 06.2005

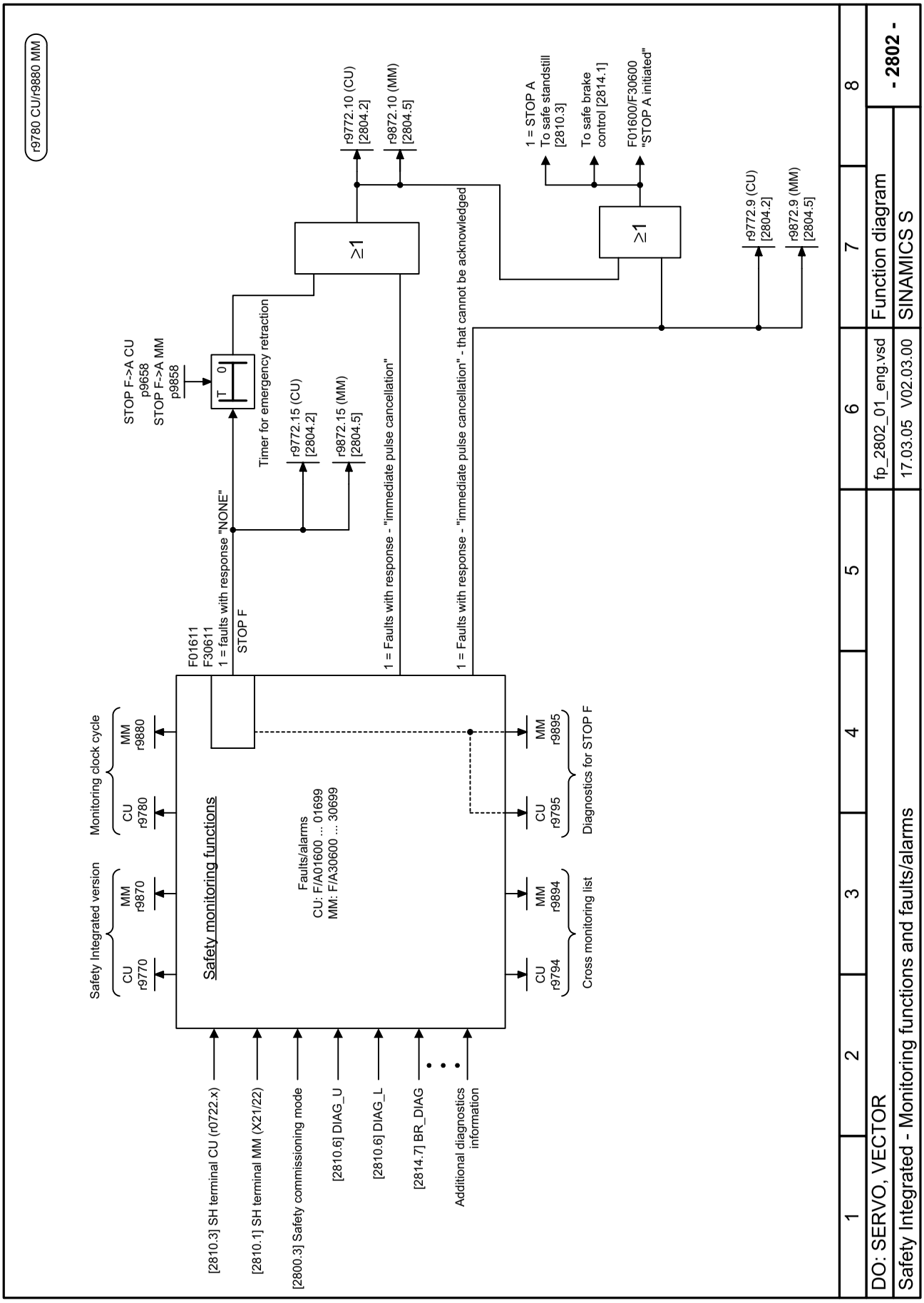

Figure 2-76 2802 – Monitoring and faults/alarms

© Siemens AG, 2005. All rights reserved

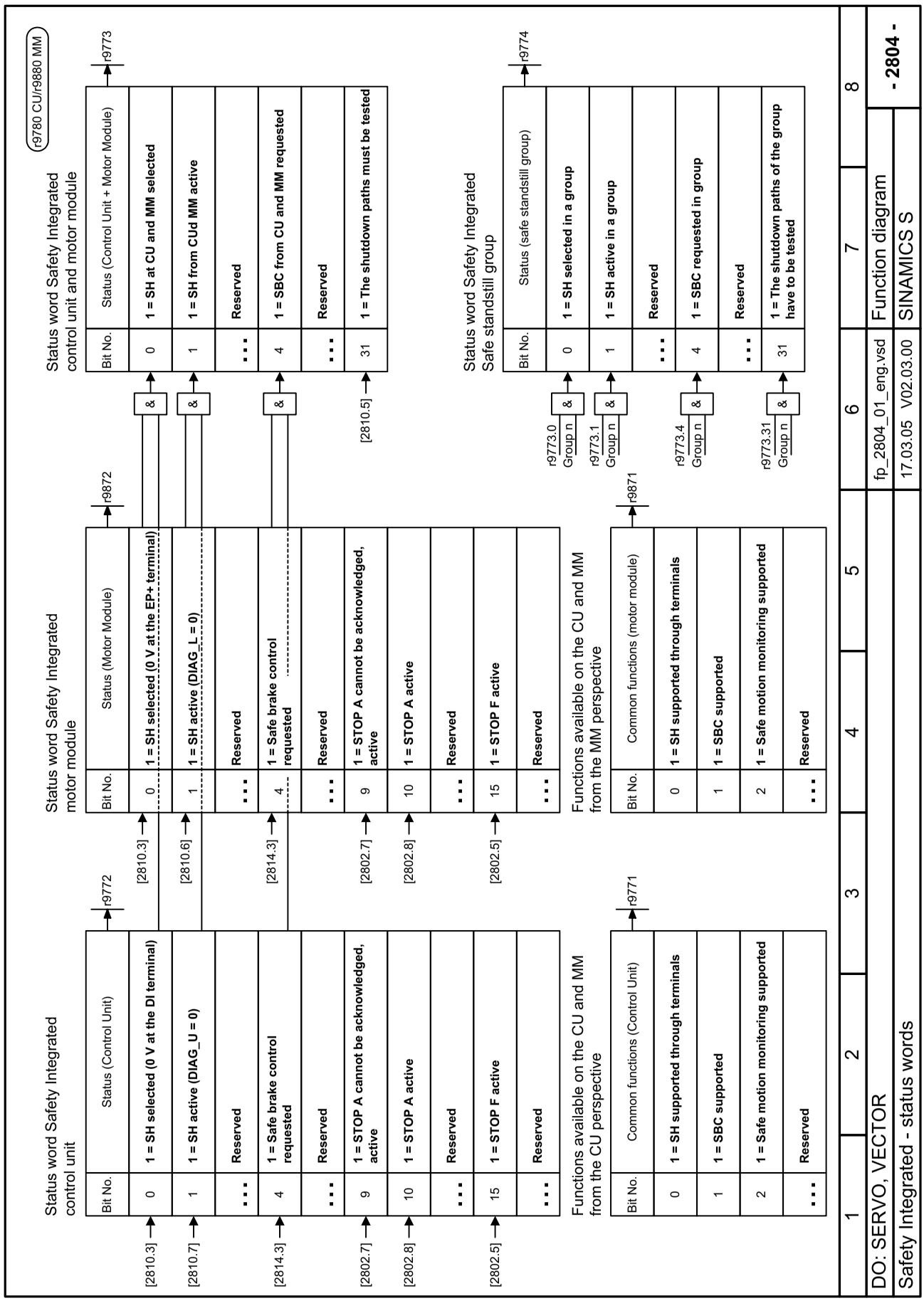

Figure 2-77 2804 – Status words

© Siemens AG, 2005. All rights reserved
SINAMICS S List Manual, Edition 06.2005

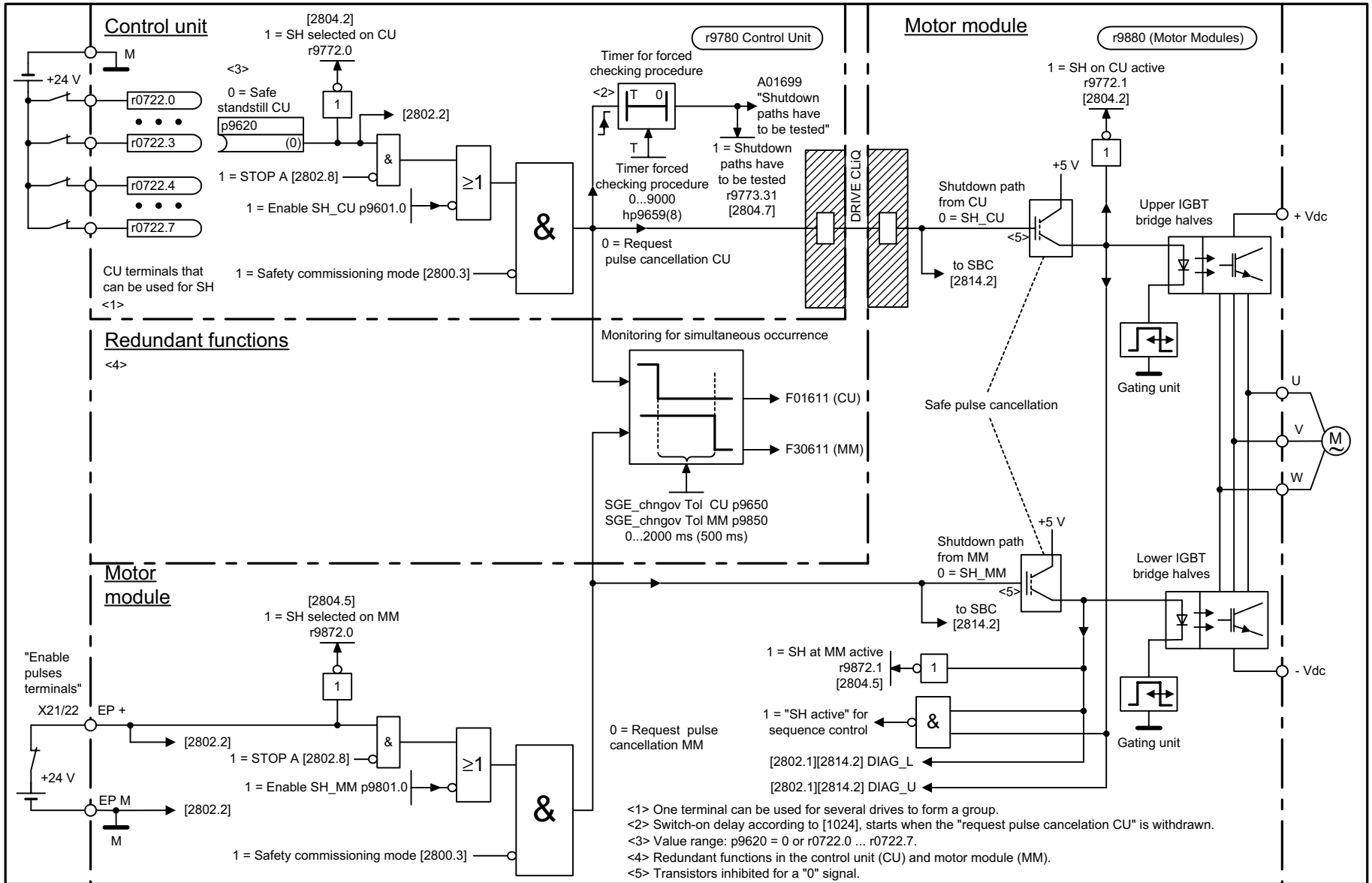

1	2	3	4	5	6	7	8
DO: SERVO, VECTOR					fp_2810_01_eng.vsd	Function diagram	- 2810 -
Safety Integrated - safe standstill (SH)					17.03.05 V02.03.00	SINAMICS S	

Figure 2-78 2810 – Safe standstill (SH)

© Siemens AG, 2005. All rights reserved
SINAMICS S List Manual, Edition 06.2005

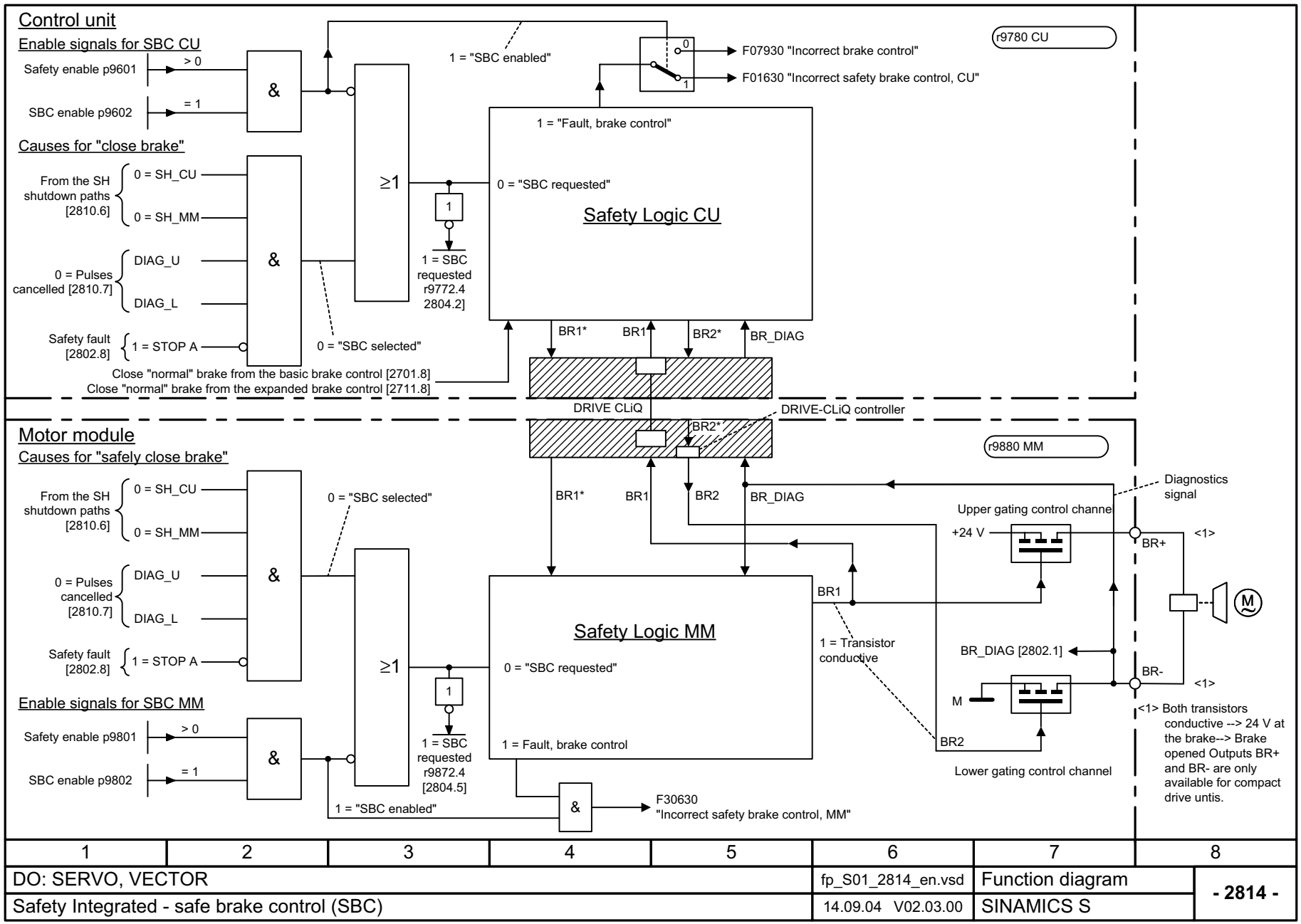

1	2	3	4	5	6	7	8
DO: SERVO, VECTOR					fp_S01_2814_en.vsd	Function diagram	- 2814 -
Safety Integrated - safe brake control (SBC)					14.09.04 V02.03.00	SINAMICS S	

Figure 2-79 2814 – Safe brake control (SBC)

© Siemens AG, 2005. All rights reserved
SINAMICS S List Manual, Edition 06.2005

2.11 Setpoint channel

Function diagrams

3010 – Fixed speed setpoints	2-808
3020 – Motorized potentiometer	2-809
3030 – Main/added setpoint, setpoint scaling, jogging	2-810
3040 – Direction limitation and direction reversal	2-811
3050 – Suppression bandwidth and speed limiting	2-812
3060 – Simple ramp-function generator	2-813
3070 – Extended ramp-function generator	2-814
3080 – Ramp-function generator selection, status word, tracking	2-815
3090 – Dynamic Servo Control (DSC)	2-816

© Siemens AG, 2005. All rights reserved

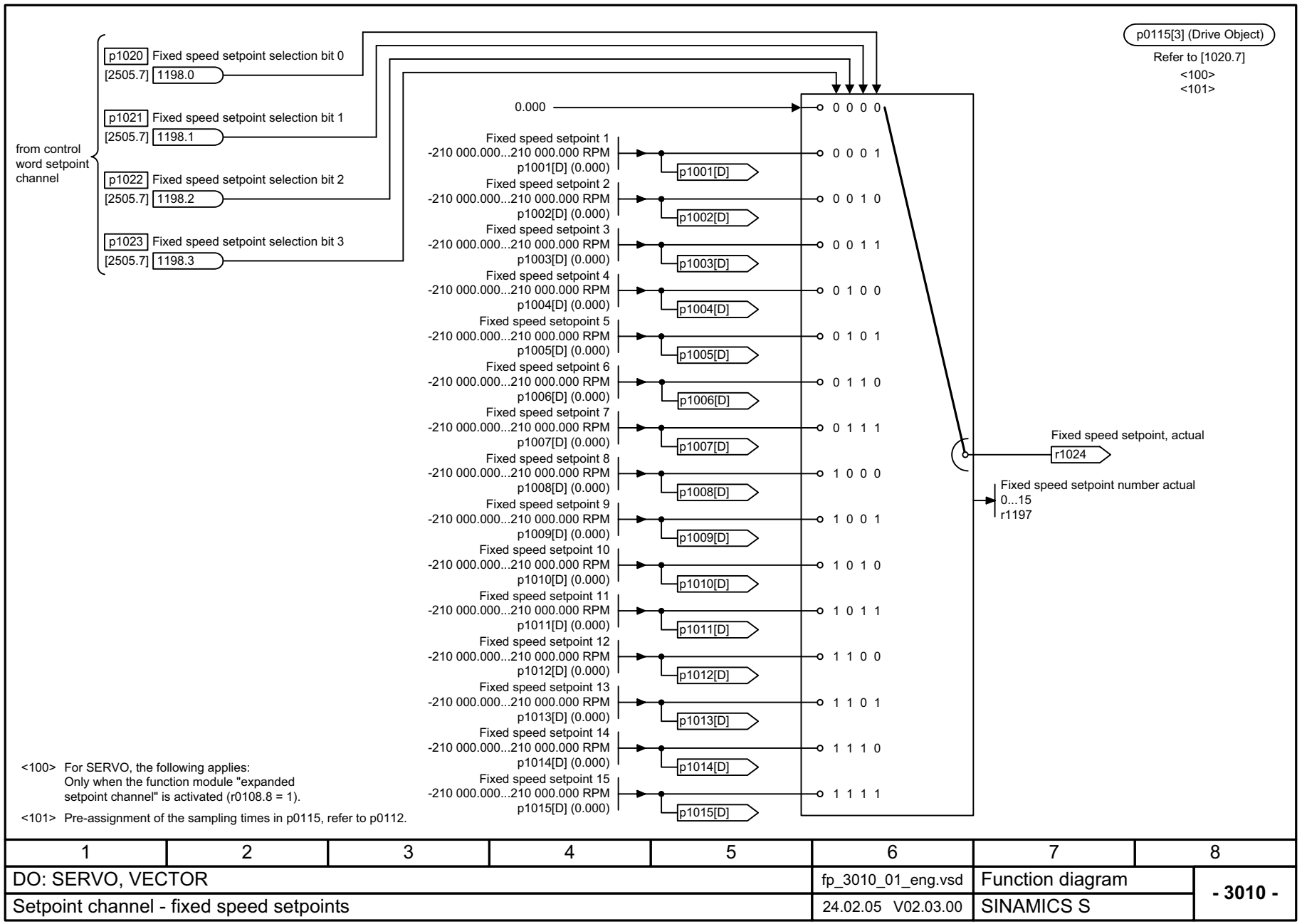

1	2	3	4	5	6	7	8
DO: SERVO, VECTOR					fp_3010_01_eng.vsd	Function diagram	- 3010 -
Setpoint channel - fixed speed setpoints					24.02.05 V02.03.00	SINAMICS S	

Figure 2-80 3010 – Fixed speed setpoints

© Siemens AG, 2005. All rights reserved
SINAMICS S List Manual, Edition 06.2005

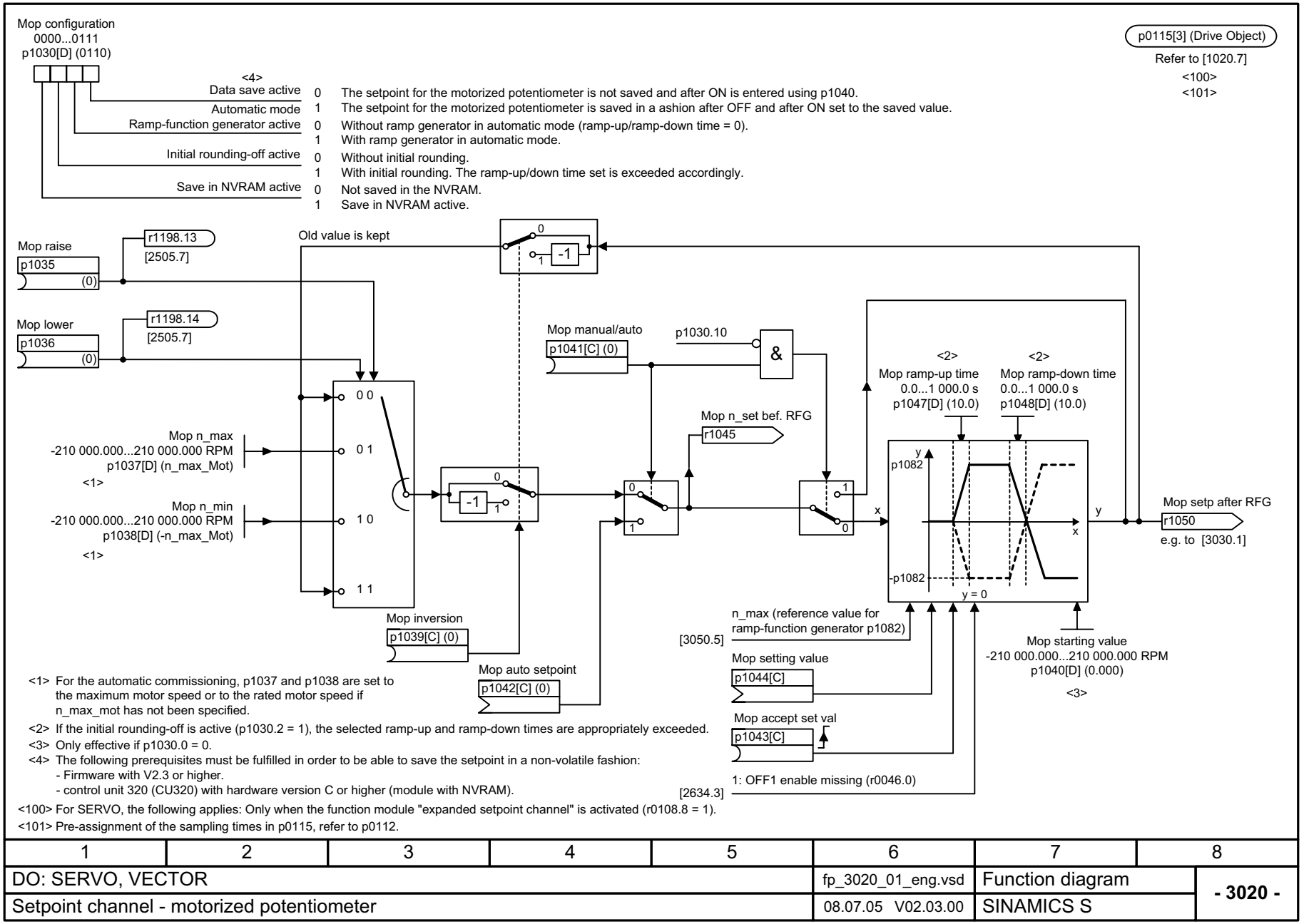

1	2	3	4	5	6	7	8
DO: SERVO, VECTOR					fp_3020_01_eng.vsd	Function diagram	- 3020 -
Setpoint channel - motorized potentiometer					08.07.05 V02.03.00	SINAMICS S	

Figure 2-81 3020 – Motorized potentiometer

© Siemens AG, 2005. All rights reserved
SINAMICS S List Manual, Edition 06.2005

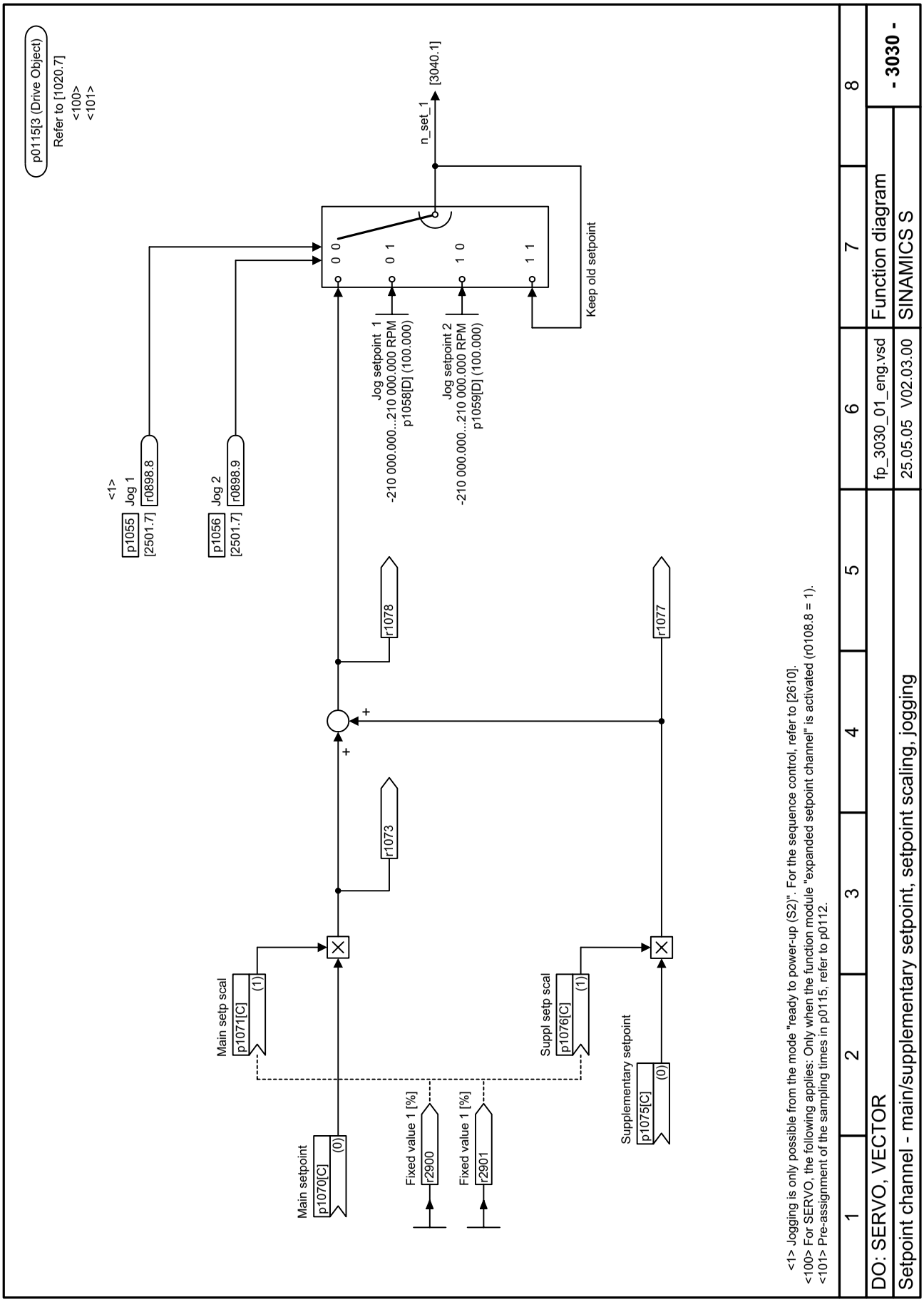

Figure 2-82 3030 – Main/added setpoint, setpoint scaling, jogging

© Siemens AG, 2005. All rights reserved

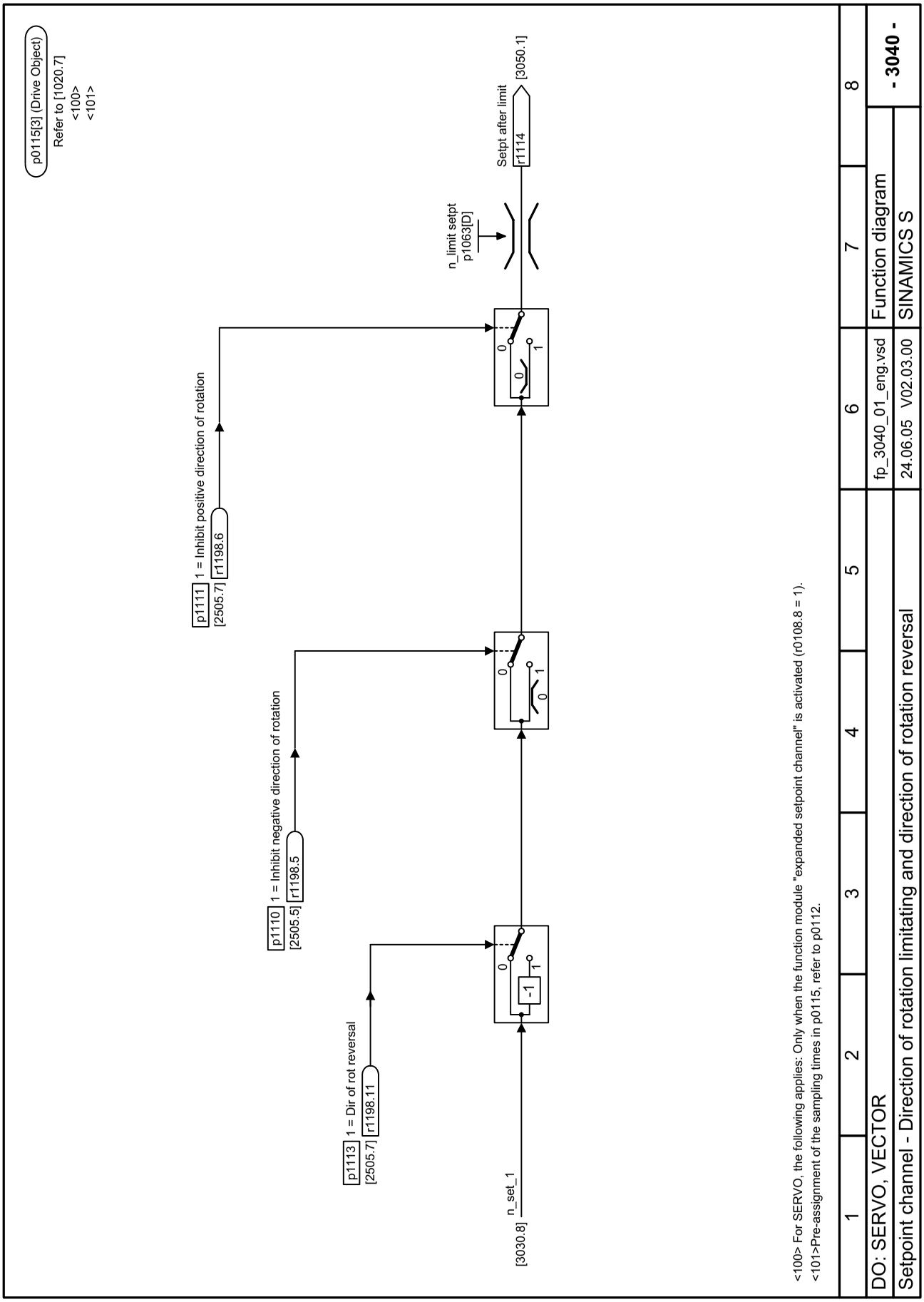

Figure 2-83 3040 – Direction limitation and direction reversal

© Siemens AG, 2005. All rights reserved

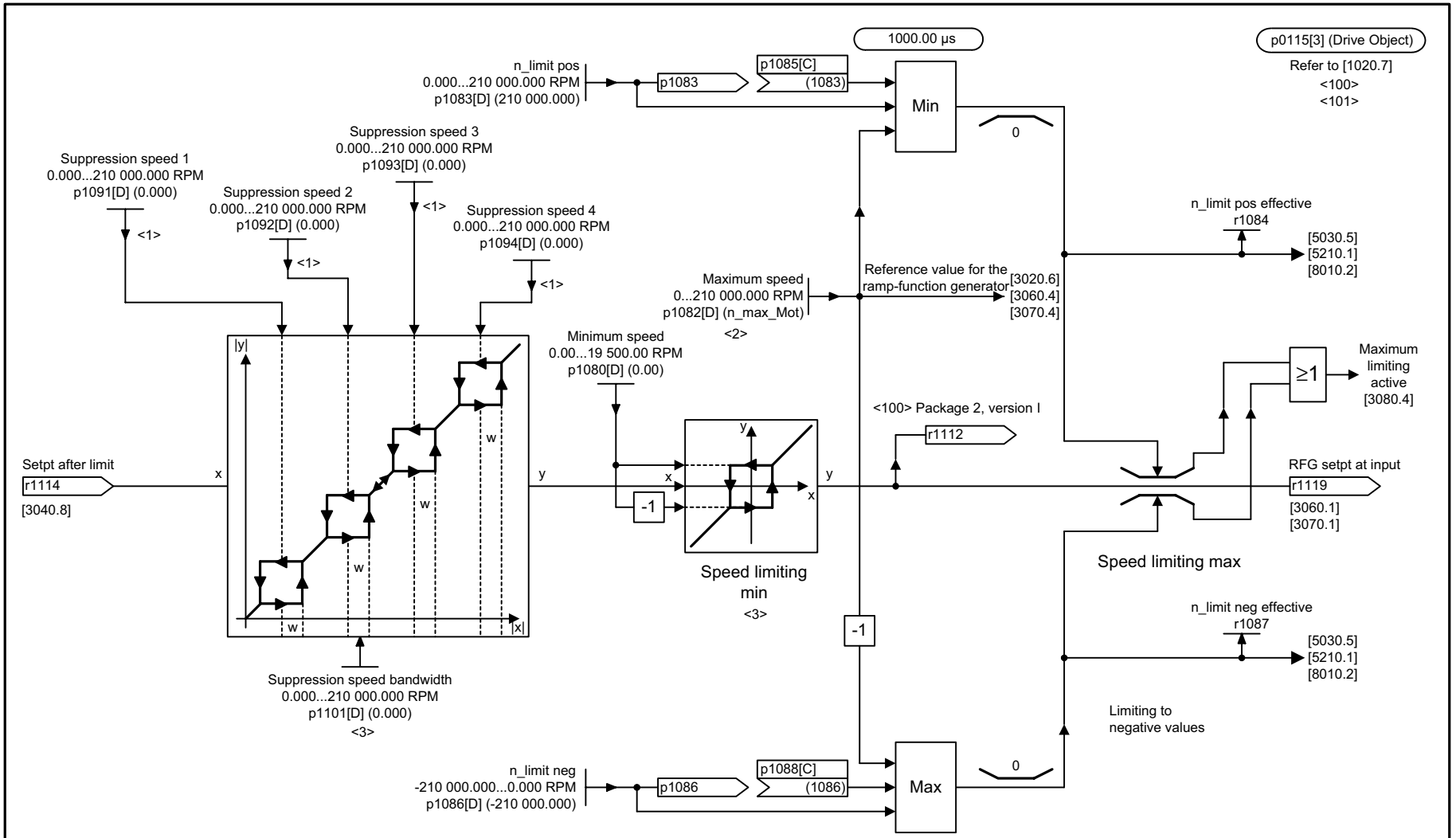

<1> A suppression speed of "0" de-activates the suppression speed bandwidth.
<2> The setting range of p1082 is limited to n_max_mot.
<3> If the drive is not stopped using the input setpoint, but using a controlled intervention, then after a subsequent run-up, the lower hysteresis branch is decisive.
<100> For SERVO, the following applies: Only when the function module "expanded setpoint channel" is activated (r0108.8 = 1). For r0108.8 = 0, [3095] is valid for generating the speed limits.
<101> Pre-assignment of the sampling times in p0115, refer to p0112.

1	2	3	4	5	6	7	8
DO: SERVO, VECTOR					fp_3050_01_eng.vsd	Function diagram	- 3050 -
Setpoint channel - suppression bandwidth and speed limiting					08.06.05 V02.03.00	SINAMICS S	

Figure 2-84 3050 – Suppression bandwidth and speed limiting

© Siemens AG, 2005. All rights reserved
SINAMICS S List Manual, Edition 06.2005

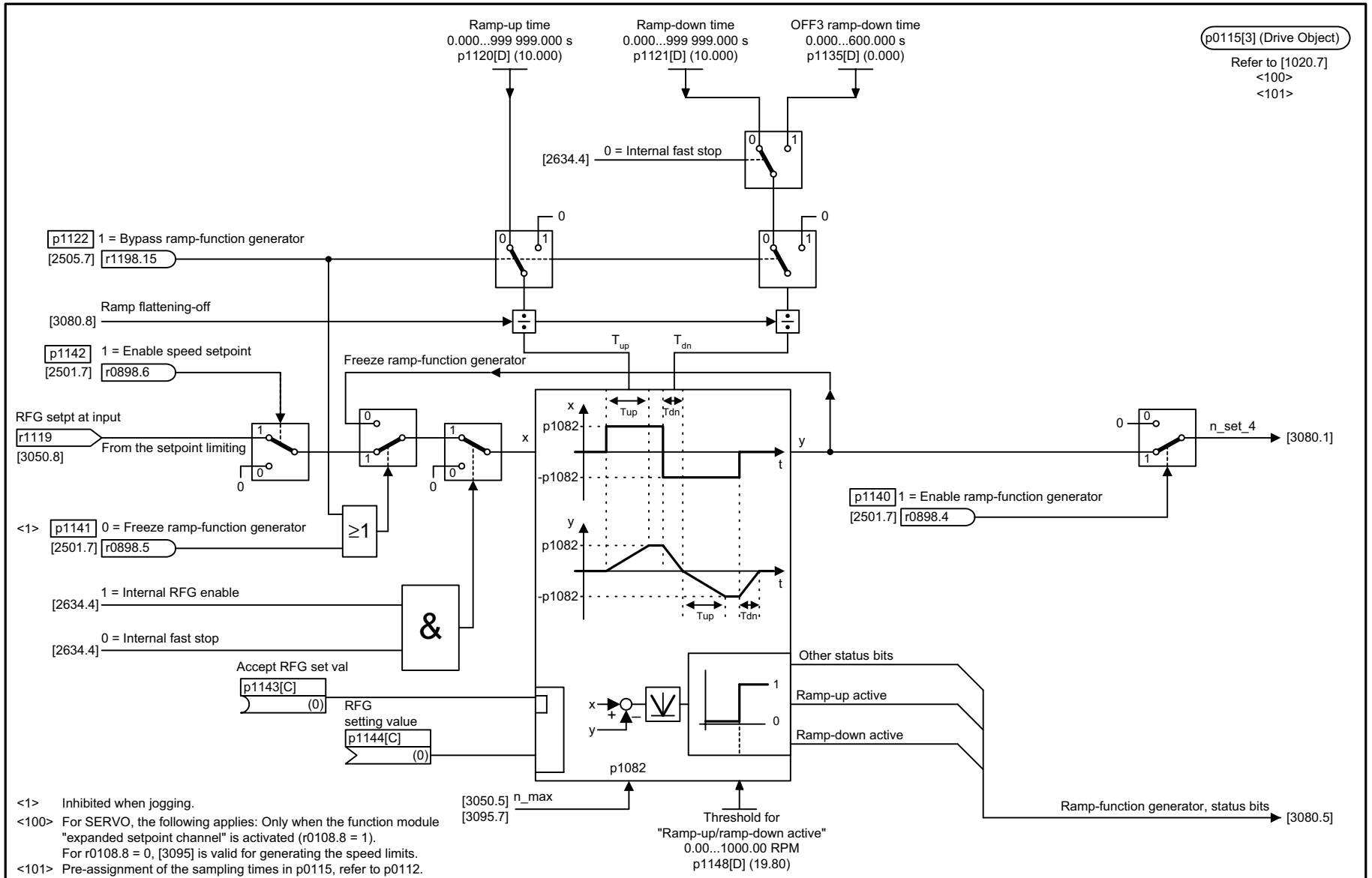

<1> Inhibited when jogging.
<100> For SERVO, the following applies: Only when the function module "expanded setpoint channel" is activated (r0108.8 = 1).
For r0108.8 = 0, [3095] is valid for generating the speed limits.
<101> Pre-assignment of the sampling times in p0115, refer to p0112.

1	2	3	4	5	6	7	8
DO: SERVO, VECTOR					fp_3060_01_eng.vsd	Function diagram	- 3060 -
Setpoint channel - basic ramp-function generator					28.07.05 V02.03.00	SINAMICS S	

Figure 2-85 3060 – Simple ramp-function generator

© Siemens AG, 2005. All rights reserved
SINAMICS S List Manual, Edition 06.2005

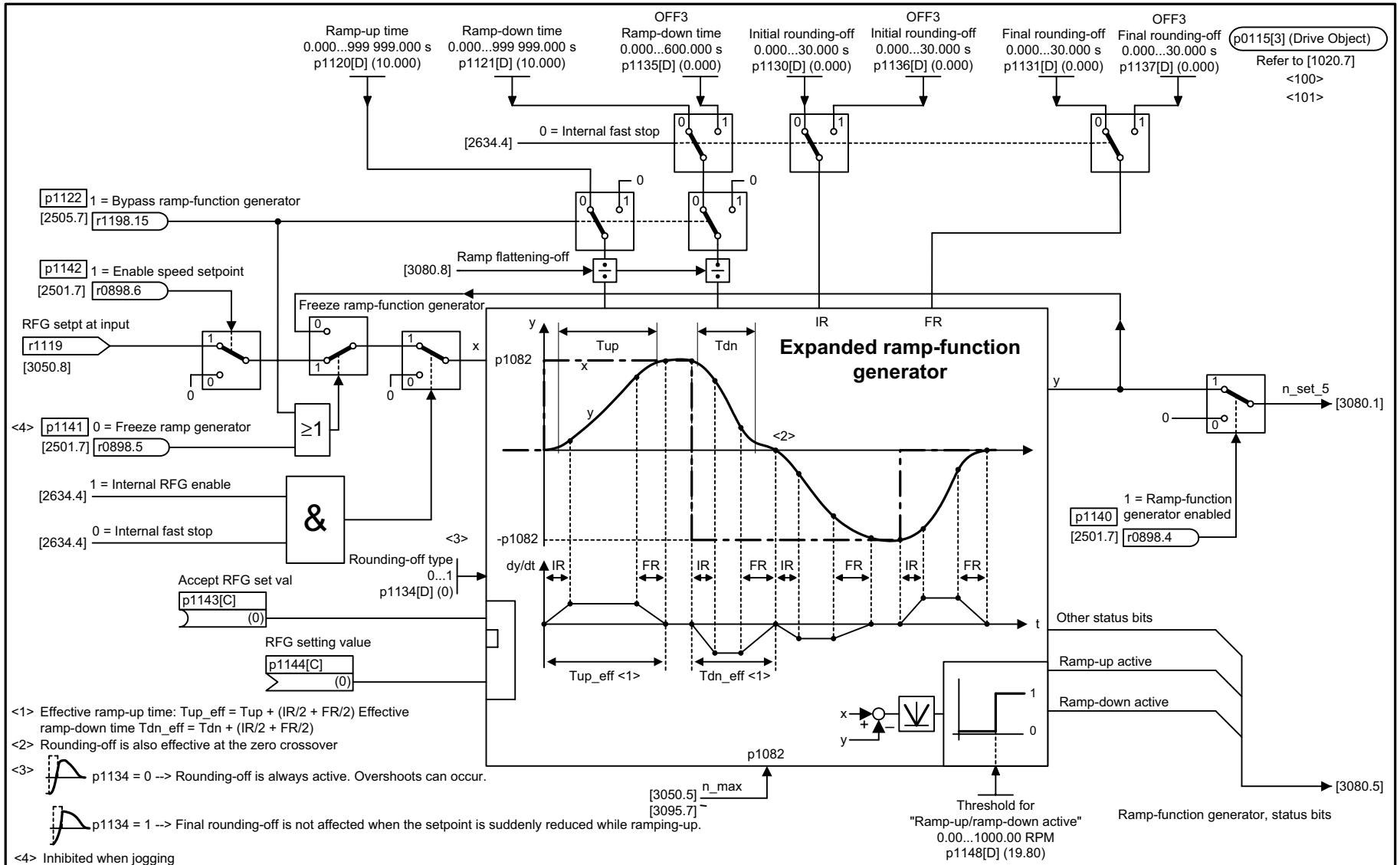

1	2	3	4	5	6	7	8
DO: SERVO, VECTOR					fp_3070_01_eng.vsd	Function diagram	- 3070 -
Setpoint channel - expanded ramp-function generator					28.07.05 V02.03.00	SINAMICS S	

Figure 2-86 3070 – Extended ramp-function generator

© Siemens AG, 2005. All rights reserved
SINAMICS S List Manual, Edition 06.2005

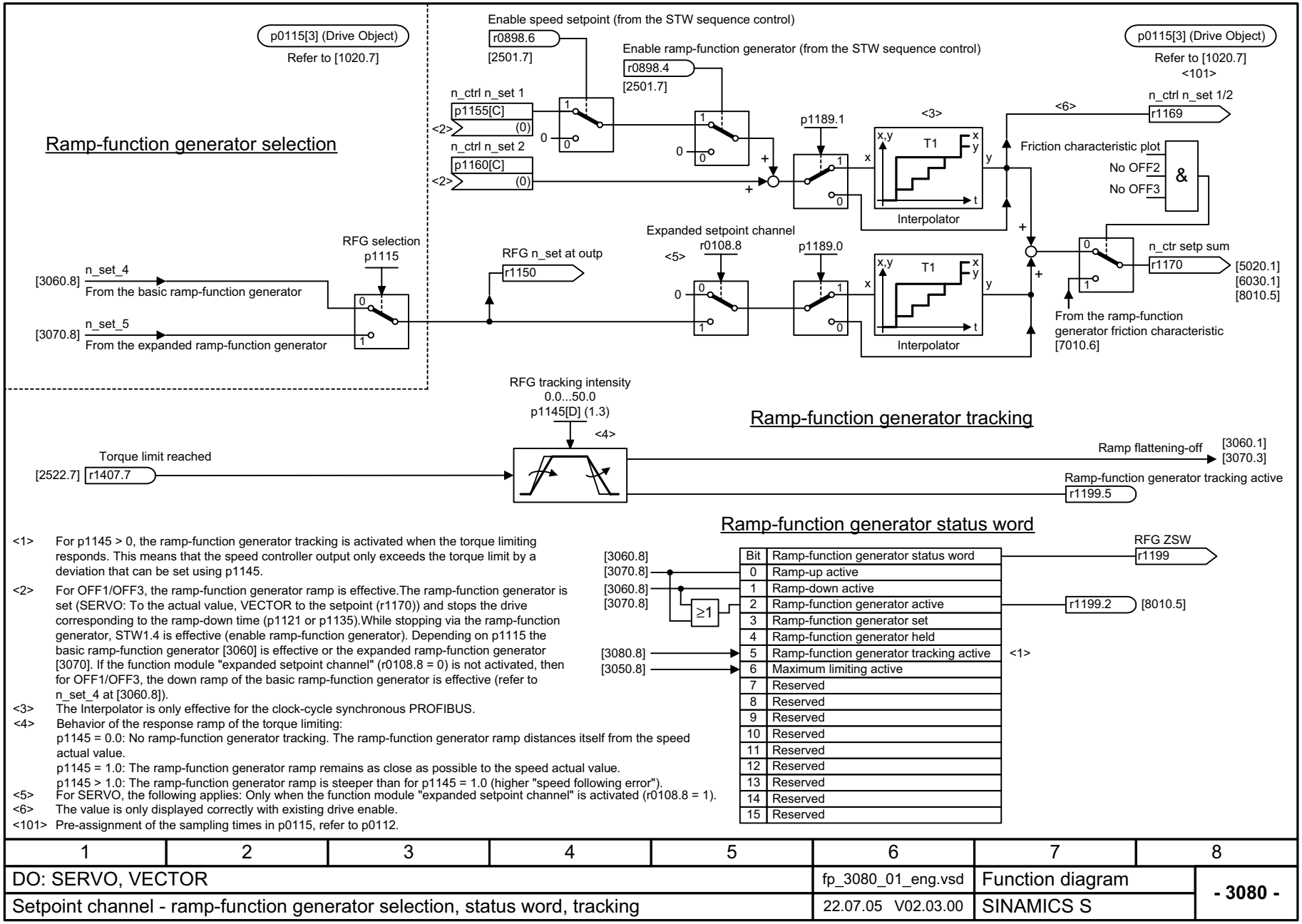

<1> For p1145 > 0, the ramp-function generator tracking is activated when the torque limiting responds. This means that the speed controller output only exceeds the torque limit by a deviation that can be set using p1145.

<2> For OFF1/OFF3, the ramp-function generator ramp is effective.The ramp-function generator is set (SERVO: To the actual value, VECTOR to the setpoint (r1170)) and stops the drive corresponding to the ramp-down time (p1121 or p1135).While stopping via the ramp-function generator, STW1.4 is effective (enable ramp-function generator). Depending on p1115 the basic ramp-function generator [3060] is effective or the expanded ramp-function generator [3070]. If the function module "expanded setpoint channel" (r0108.8 = 0) is not activated, then for OFF1/OFF3, the down ramp of the basic ramp-function generator is effective (refer to n_set_4 at [3060.8]).

<3> The Interpolator is only effective for the clock-cycle synchronous PROFIBUS.

<4> Behavior of the response ramp of the torque limiting:
p1145 = 0.0: No ramp-function generator tracking. The ramp-function generator ramp distances itself from the speed actual value.
p1145 = 1.0: The ramp-function generator ramp remains as close as possible to the speed actual value.
p1145 > 1.0: The ramp-function generator ramp is steeper than for p1145 = 1.0 (higher "speed following error").

<5> For SERVO, the following applies: Only when the function module "expanded setpoint channel" is activated (r0108.8 = 1).

<6> The value is only displayed correctly with existing drive enable.

<101> Pre-assignment of the sampling times in p0115, refer to p0112.

1	2	3	4	5	6	7	8
DO: SERVO, VECTOR					fp_3080_01_eng.vsd	Function diagram	- 3080 -
Setpoint channel - ramp-function generator selection, status word, tracking					22.07.05 V02.03.00	SINAMICS S	

Figure 2-87 3080 – Ramp-function generator selection, status word, tracking

© Siemens AG, 2005. All rights reserved
SINAMICS S List Manual, Edition 06.2005

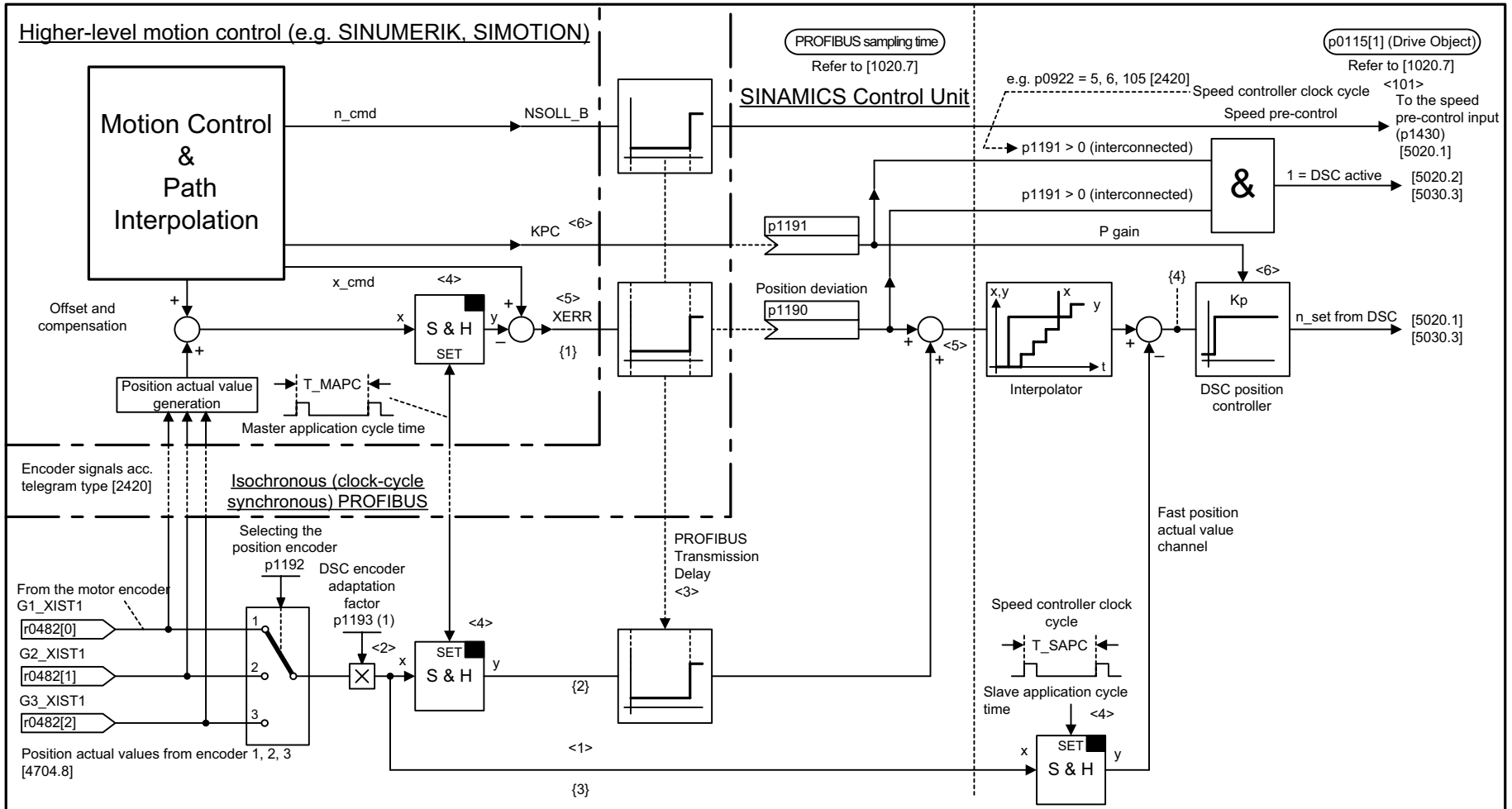

Figure 2-88 3090 – Dynamic Servo Control (DSC)

<1> Principle of operation of Dynamic Servo Control (DSC): The feedback branch {2} completely compensates the feedback coupling branch {1} regarding the position actual value sent from the drive. The fast actual value channel {3} allows a high dynamic performance and high Kv factors to be achieved.
<2> For the motor encoder (p1192 = 1) p1193 = 1 is effective.
When using encoder 2 or 3 (p1192 = 2, 3), p1193 should be set to "Increments per revolution motor encoder/increments per revolution position encoder (including fine resolution)".
<3> The deadtime for the PROFIBUS data transfer is automatically set.
<4> Sample & Hold element; refer to [1021].
<5> The position deviation must be referred to the increments of the motor including the fine resolution.
<6> Normalization of KPC: If signal {4} = 1 motor revolution and KPC = 1, then "n_set from DSC" = 0.001 motor revolutions/s.
<101> Pre-assignment of the sampling times in p0115, refer to p0112.

1	2	3	4	5	6	7	8
DO: SERVO					fp_3090_01_eng.vsd	Function diagram	- 3090 -
Setpoint channel - Dynamic Servo Control (DSC)					15.10.04 V02.03.00	SINAMICS S	

© Siemens AG, 2005. All rights reserved
SINAMICS S List Manual, Edition 06.2005

2.12 Setpoint channel not activated

Function diagrams

3095 – Generation of the speed limits (r0108.8 = 0) 2-818

© Siemens AG, 2005. All rights reserved

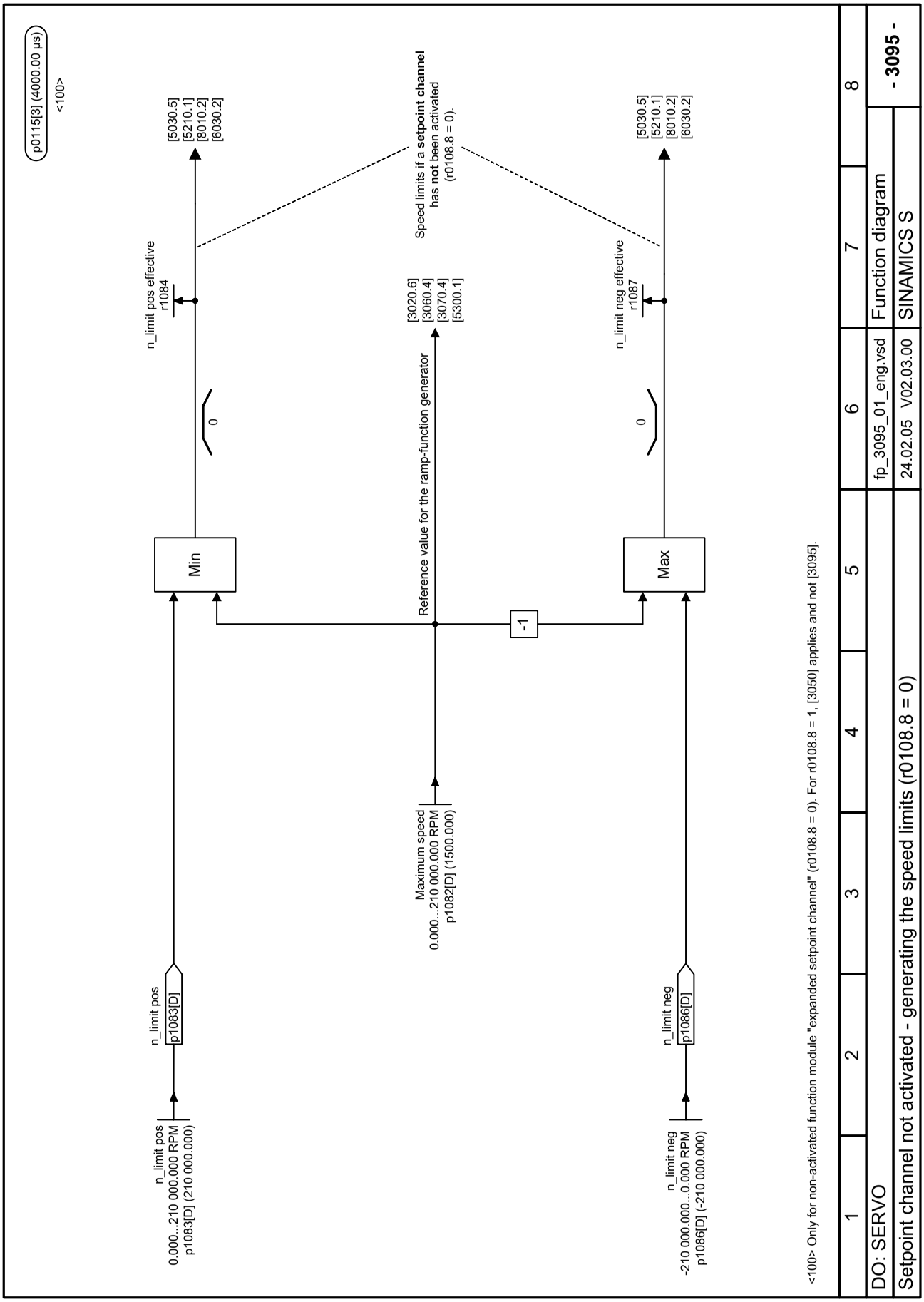

Figure 2-89 3095 – Generation of the speed limits (r0108.8 = 0)

© Siemens AG, 2005. All rights reserved

2.13 Servo control

Function diagrams

4704 – Position and temperature measurement, encoder 1 ... 3	2-820
4710 – Actual speed value and rotor position measurement, motor encoder (encoder 1)	2-821
4720 – Encoder interface, receive signals, encoder 1 ... 3	2-822
4730 – Encoder interface, send signals, encoder 1 ... 3	2-823
4735 – Reference mark search with equivalent zero mark, encoder 1 ... 3	2-824
4740 – Measuring input evaluation, measured value memory, encoder 1 ... 3	2-825
5020 – Speed setpoint filter and speed pre-control	2-826
5030 – Reference model/pre-control balancing/setpoint speed controller	2-827
5040 – Speed controller with encoder	2-828
5050 – Kp_n-/Tn_n adaptation	2-829
5060 – Torque setpoint, control type switchover	2-830
5210 – Speed controller without encoder	2-831
5300 – V/f control for diagnostics	2-832
5490 – Speed control configuration	2-833
5492 – Closed-loop control status word 1	2-834
5493 – Closed-loop control status word 3	2-835
5610 – Torque limiting/reduction/interpolator	2-836
5620 – Motor/generator torque limit	2-837
5630 – Upper/lower torque limit	2-838
5640 – Mode changeover, power/current limiting	2-839
5650 – Vdc_max controller and Vdc_min controller	2-840
5710 – Current setpoint filter	2-841
5714 – Iq and Id controller	2-842
5722 – Specified field current, flux controller	2-843
5730 – Interface to the Motor Module (gating signals, current actual values)	2-844

© Siemens AG, 2005. All rights reserved

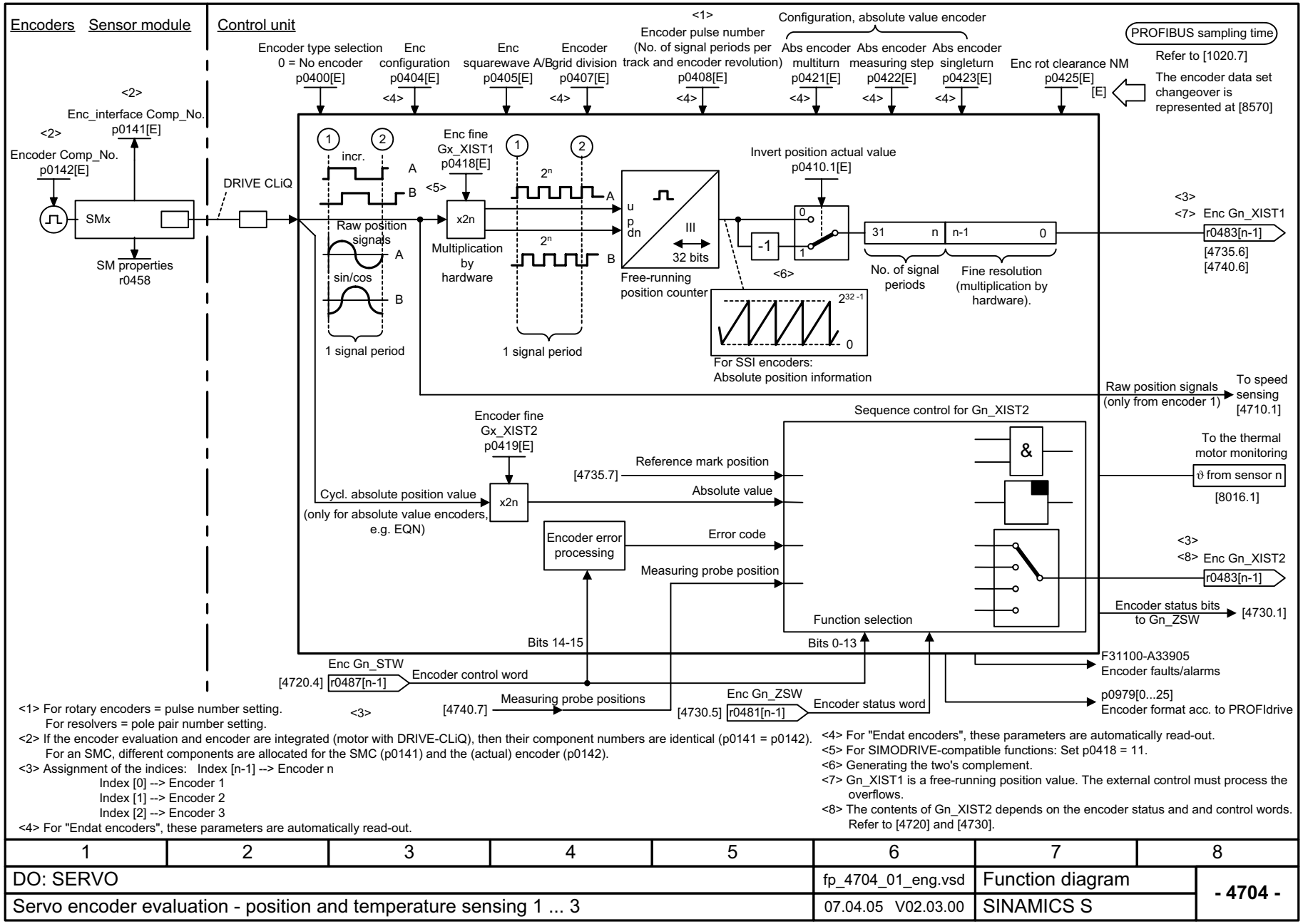

<1> For rotary encoders = pulse number setting.
For resolvers = pole pair number setting.
<2> If the encoder evaluation and encoder are integrated (motor with DRIVE-CLiQ), then their component numbers are identical (p0141 = p0142).
For an SMC, different components are allocated for the SMC (p0141) and the (actual) encoder (p0142).
<3> Assignment of the indices: Index [n-1] --> Encoder n
Index [0] --> Encoder 1
Index [1] --> Encoder 2
Index [2] --> Encoder 3
<4> For "Endat encoders", these parameters are automatically read-out.
<4> For "Endat encoders", these parameters are automatically read-out.
<5> For SIMODRIVE-compatible functions: Set p0418 = 11.
<6> Generating the two's complement.
<7> Gn_XIST1 is a free-running position value. The external control must process the overflows.
<8> The contents of Gn_XIST2 depends on the encoder status and and control words. Refer to [4720] and [4730].

1	2	3	4	5	6	7	8
DO: SERVO					fp_4704_01_eng.vsd	Function diagram	- 4704 -
Servo encoder evaluation - position and temperature sensing 1 ... 3					07.04.05 V02.03.00	SINAMICS S	

Figure 2-90 4704 – Position and temperature measurement, encoder 1 ... 3

© Siemens AG, 2005. All rights reserved
SINAMICS S List Manual, Edition 06.2005

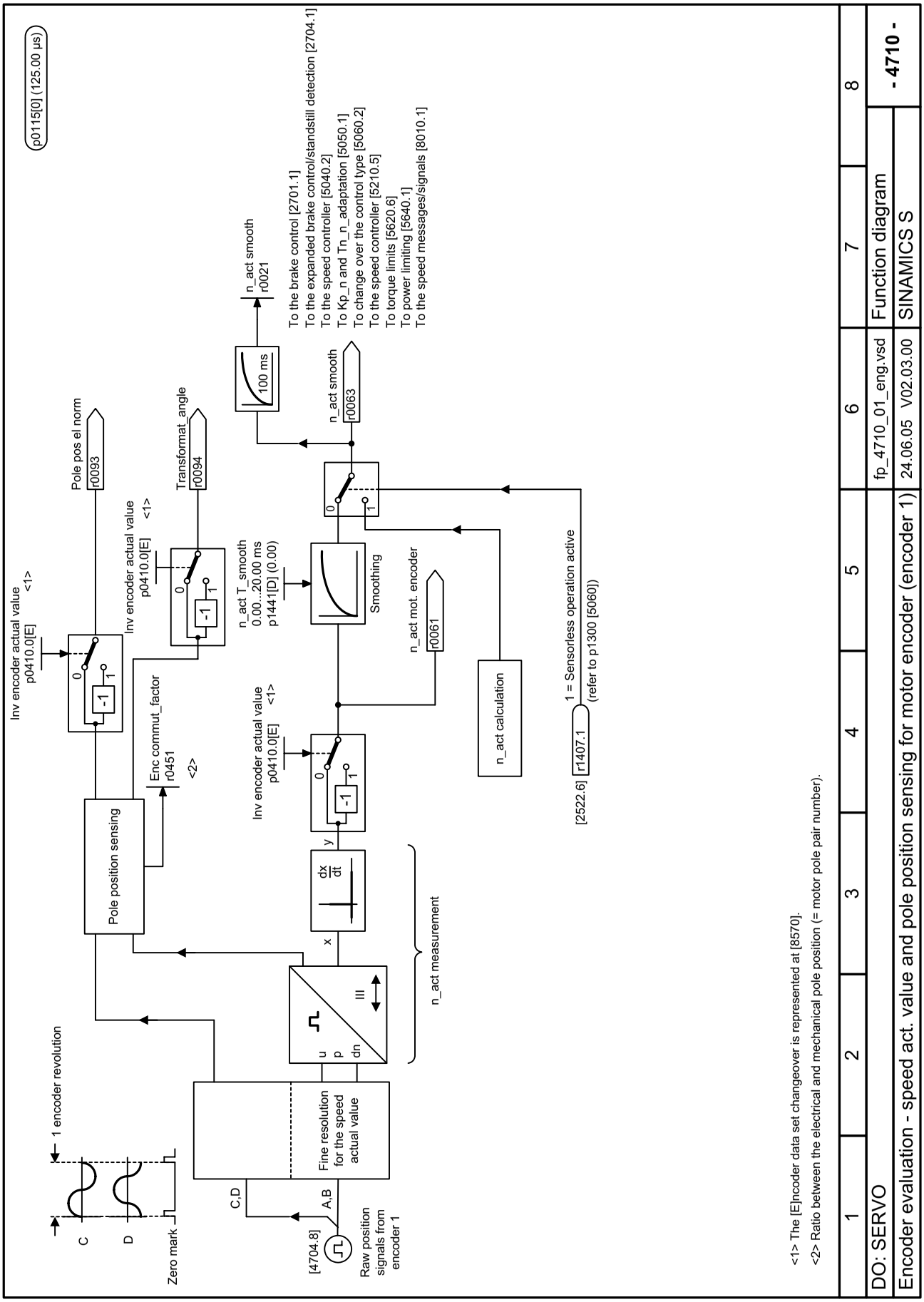

Figure 2-91 4710 – Actual speed value and rotor position measurement, motor encoder (encoder 1)

© Siemens AG, 2005. All rights reserved

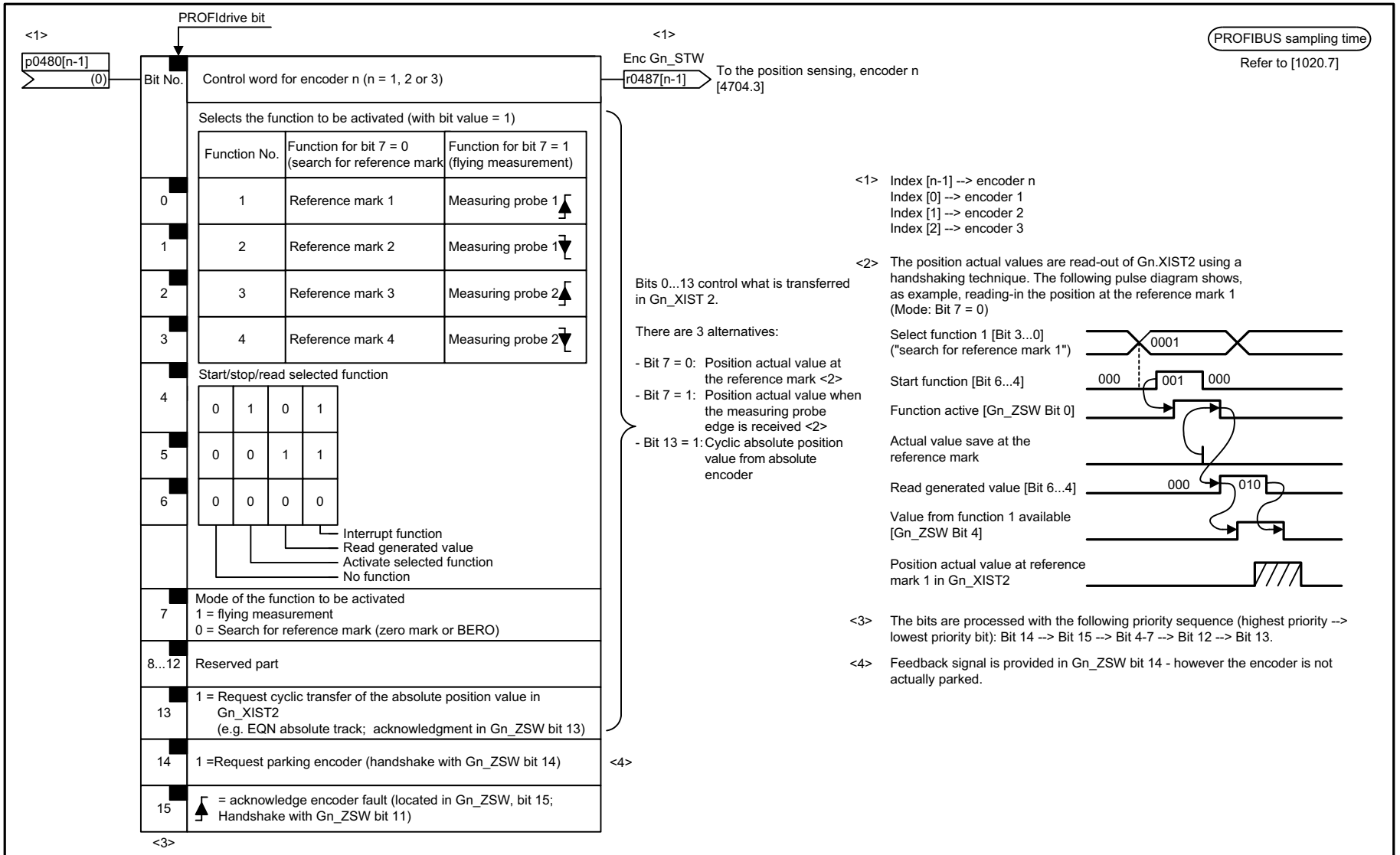

1	2	3	4	5	6	7	8
DO: SERVO					fp_4720_01_eng.vsd	Function diagram	- 4720 -
Servo encoder evaluation function - encoder interface, receive signals, encoders 1 ... 3					07.07.05 V02.03.00	SINAMICS S	

Figure 2-92 4720 – Encoder interface, receive signals, encoder 1 ... 3

© Siemens AG, 2005. All rights reserved
SINAMICS S List Manual, Edition 06.2005

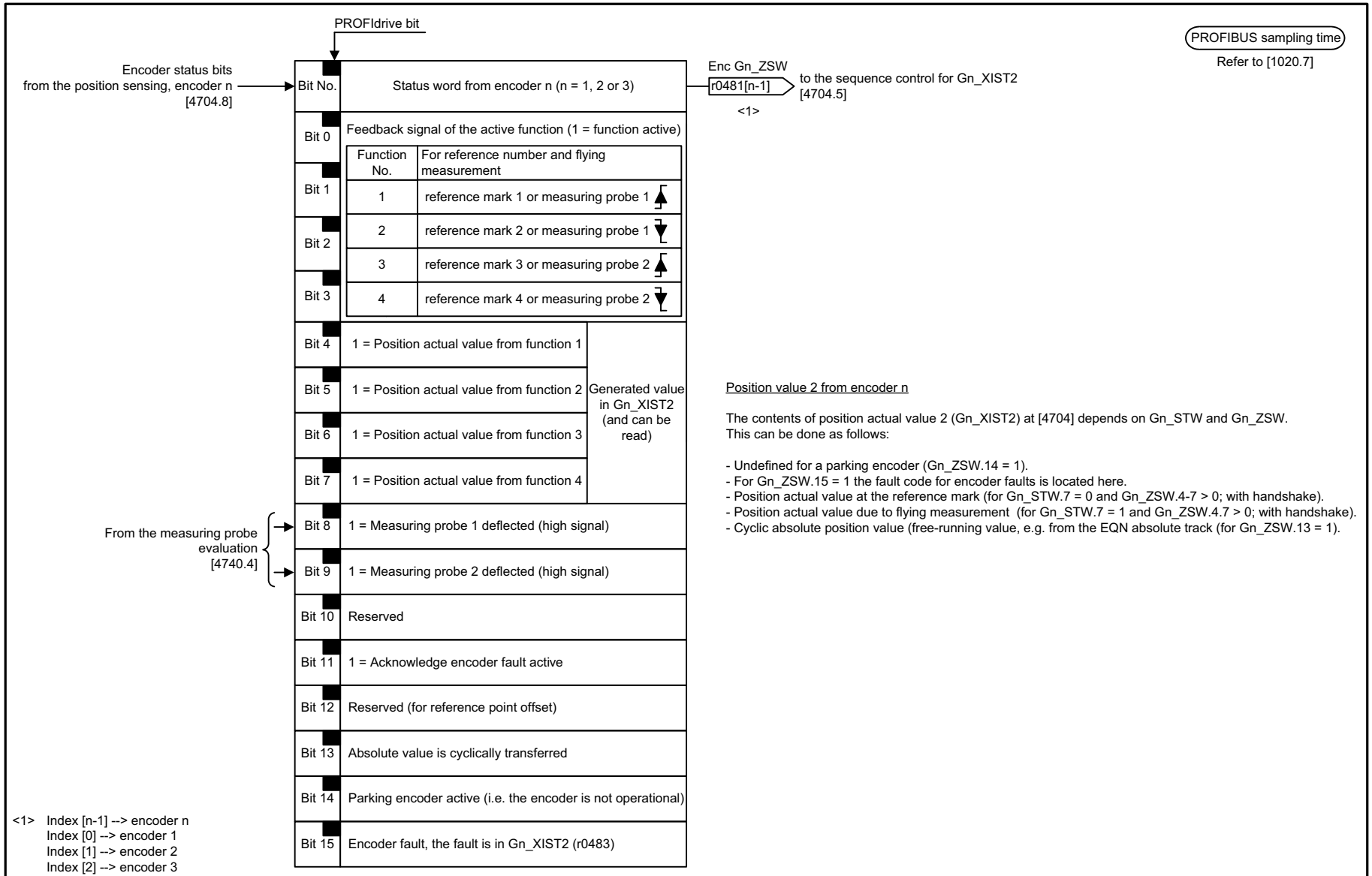

1	2	3	4	5	6	7	8
DO: SERVO					fp_4730_01_eng.vsd	Function diagram	- 4730 -
Servo encoder evaluation function - encoder interface, send signals, encoders 1 ... 3					21.12.04 V02.03.00	SINAMICS S	

Figure 2-93 4730 – Encoder interface, send signals, encoder 1 ... 3

© Siemens AG, 2005. All rights reserved

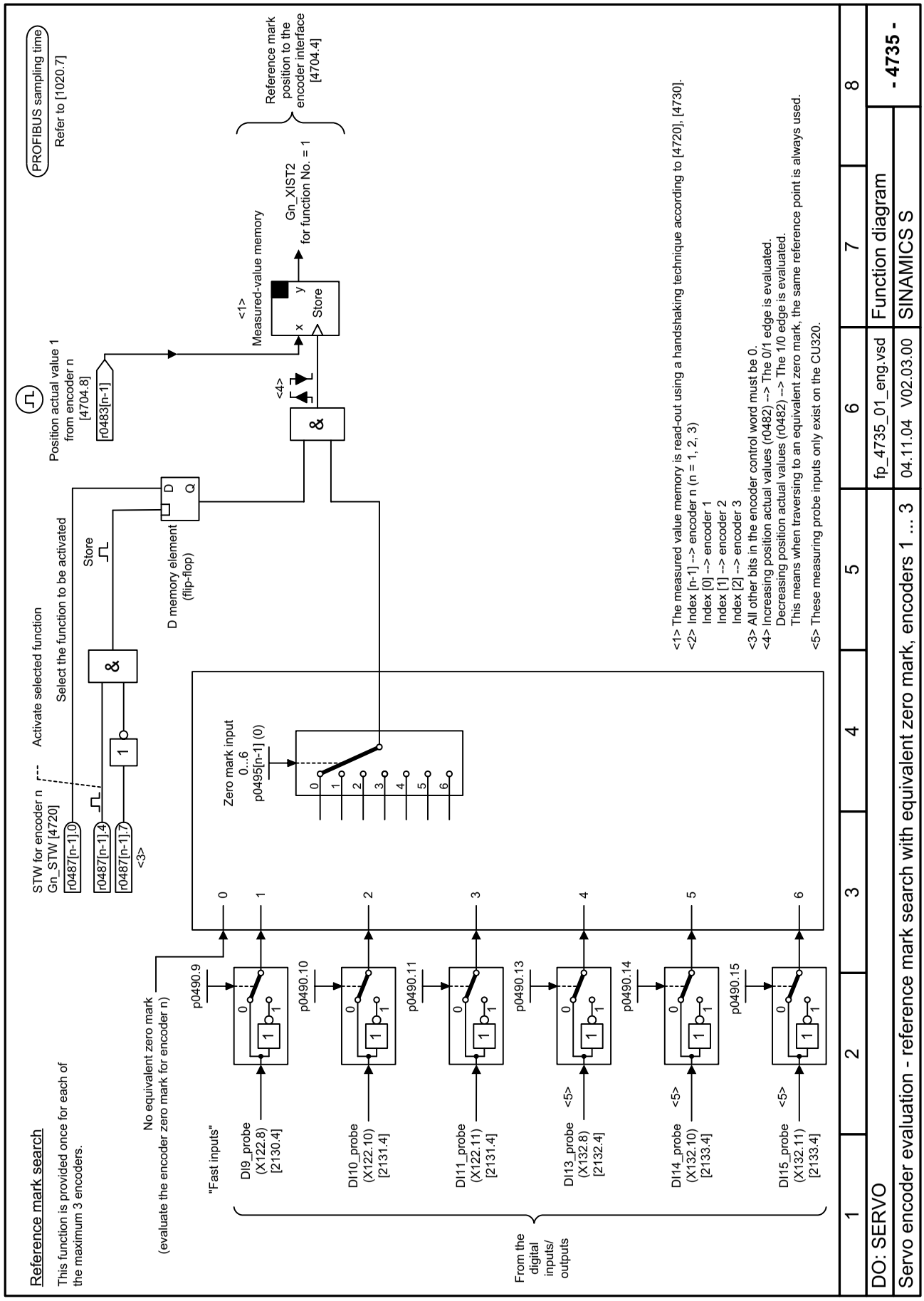

Figure 2-94 4735 – Reference mark search with equivalent zero mark, encoder 1 ... 3

© Siemens AG, 2005. All rights reserved

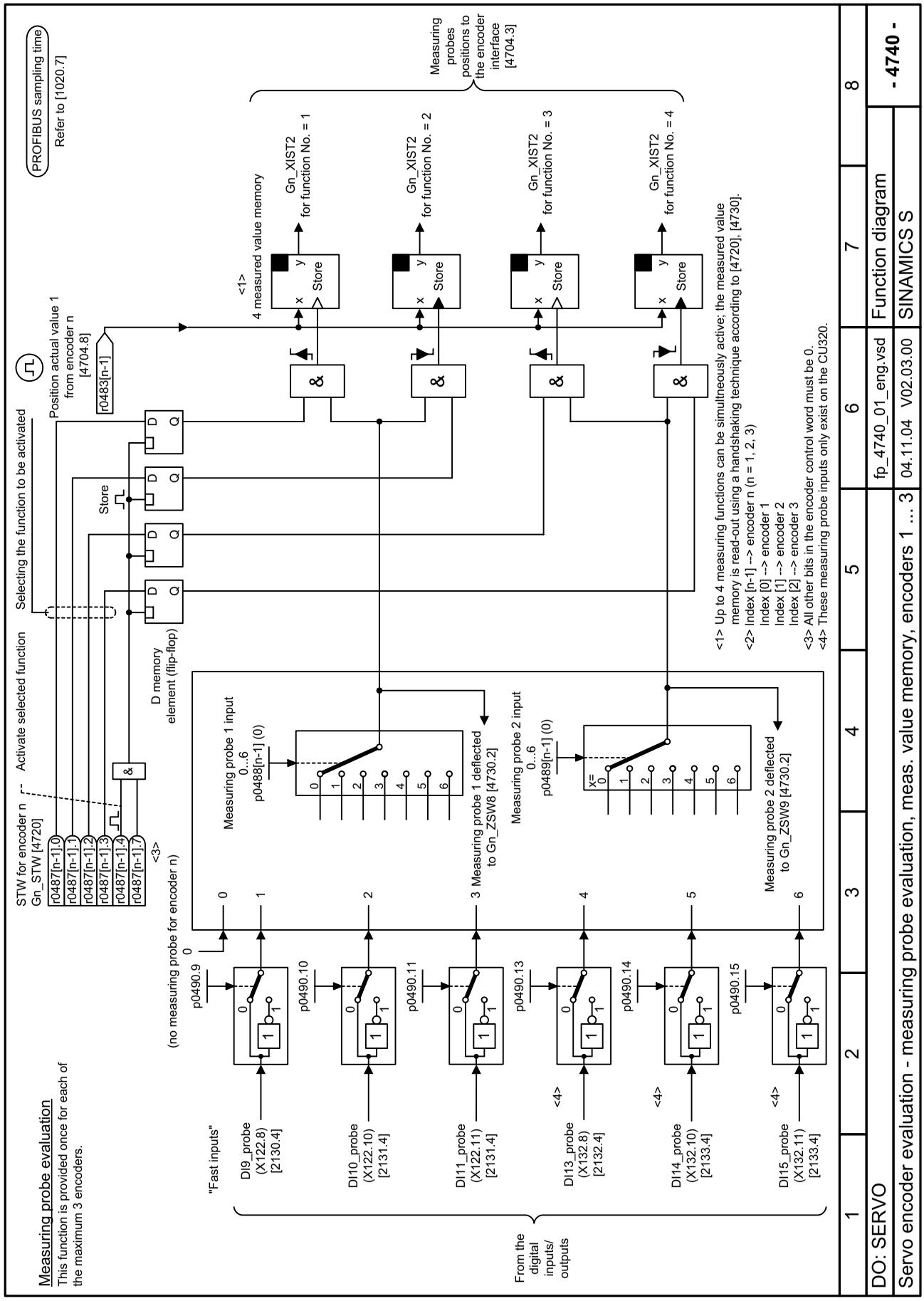

Figure 2-95 4740 – Measuring input evaluation, measured value memory, encoder 1 ... 3

© Siemens AG, 2005. All rights reserved

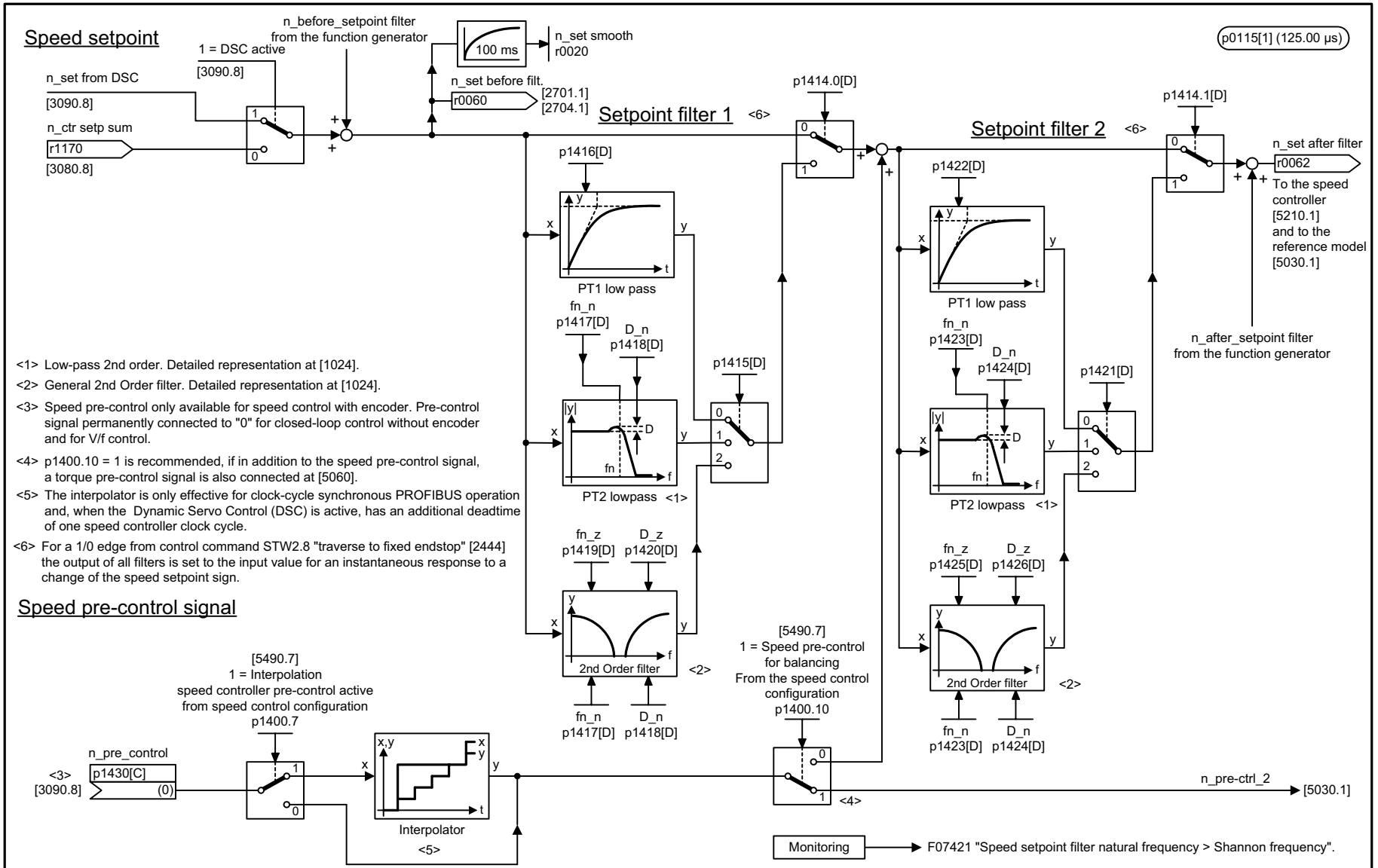

1	2	3	4	5	6	7	8
DO: SERVO					fp_5020_01_eng.vsd	Fuction diagram	- 5020 -
Servo speed control with encoder - speed setpoint filter and speed pre-control					06.07.05 V02.03.00	SINAMICS S	

Figure 2-96 5020 – Speed setpoint filter and speed pre-control

© Siemens AG, 2005. All rights reserved
SINAMICS S List Manual, Edition 06.2005

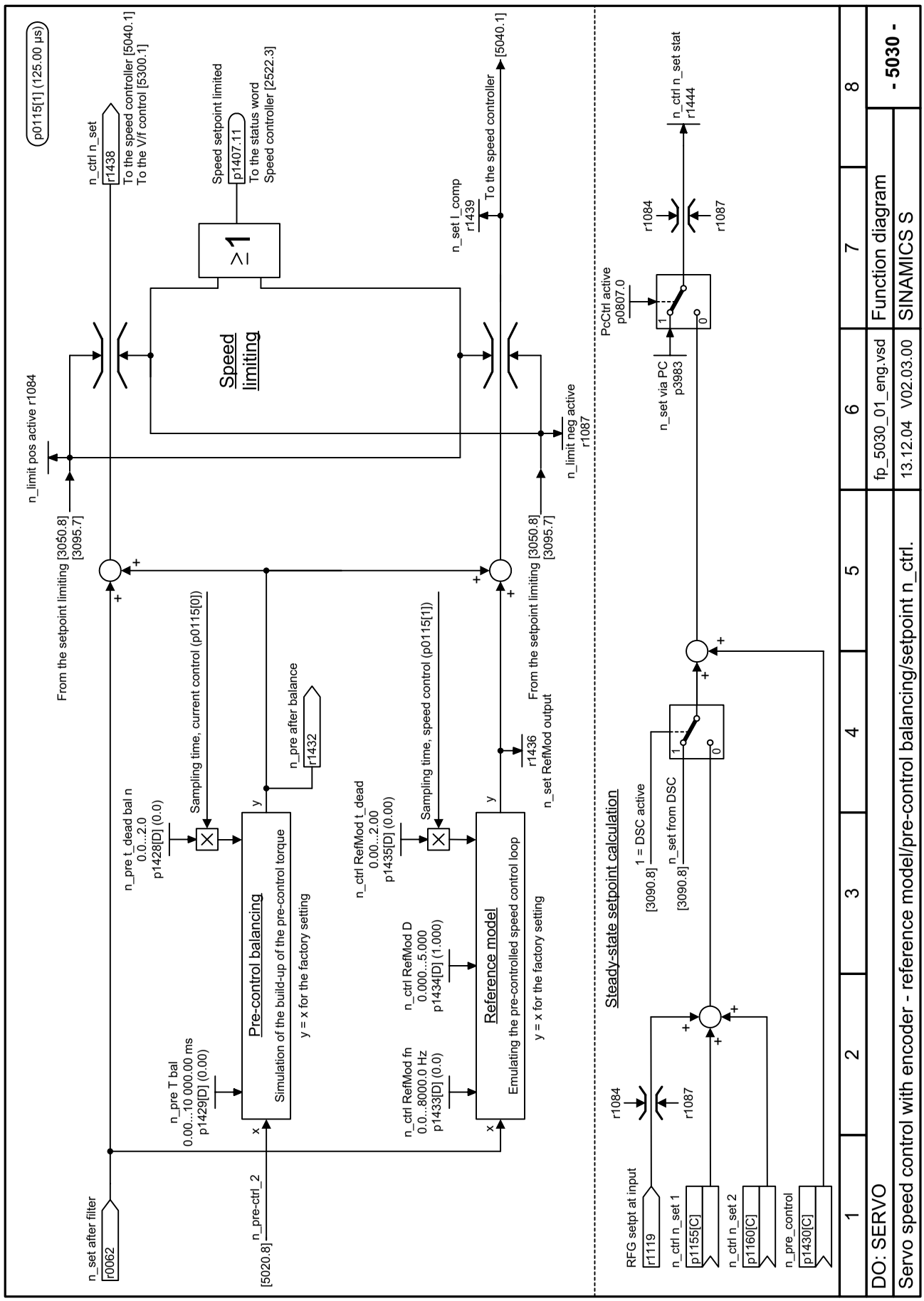

Figure 2-97 5030 – Reference model/pre-control balancing/setpoint speed controller

© Siemens AG, 2005. All rights reserved

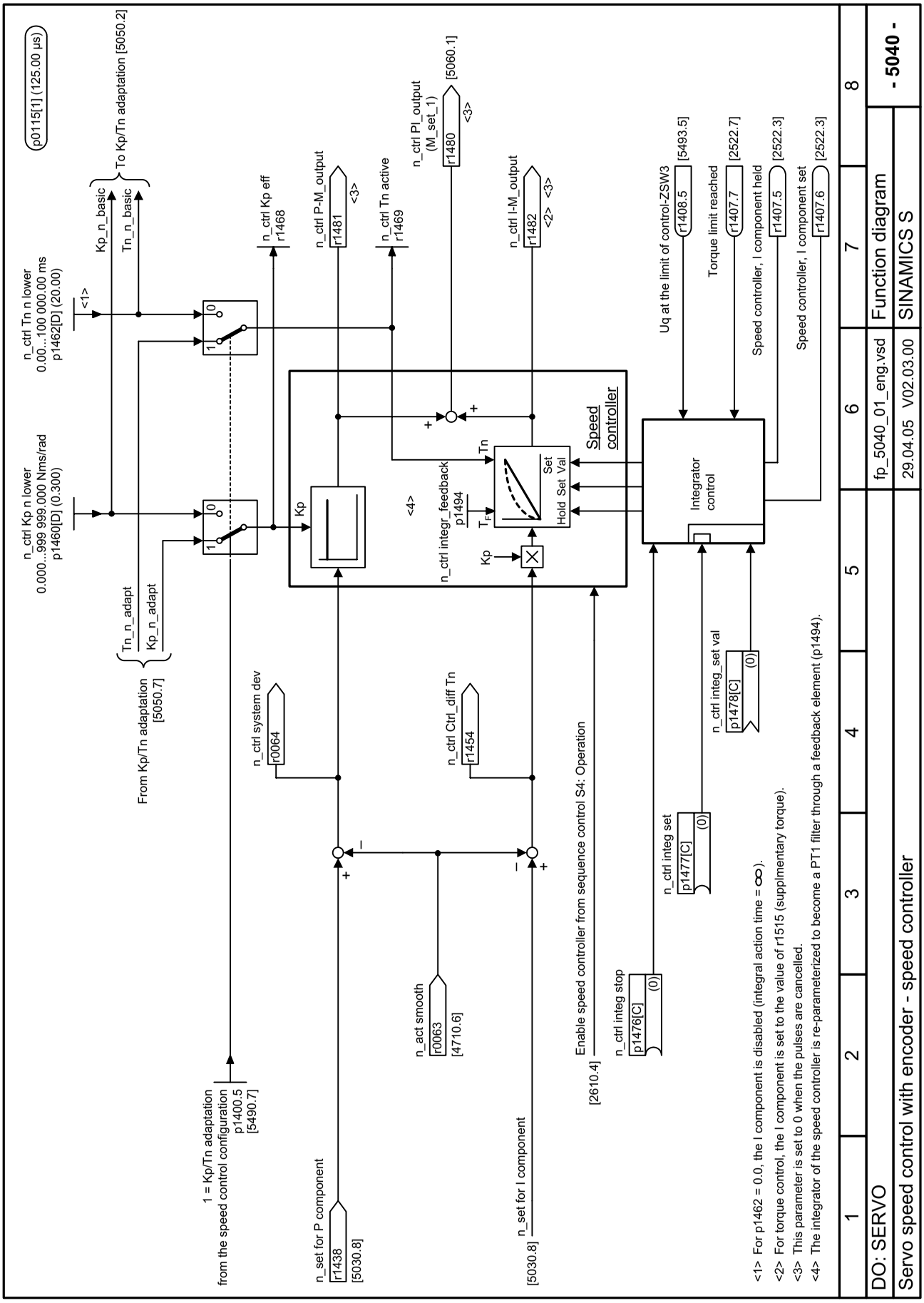

Figure 2-98 5040 – Speed controller with encoder

© Siemens AG, 2005. All rights reserved
SINAMICS S List Manual, Edition 06.2005

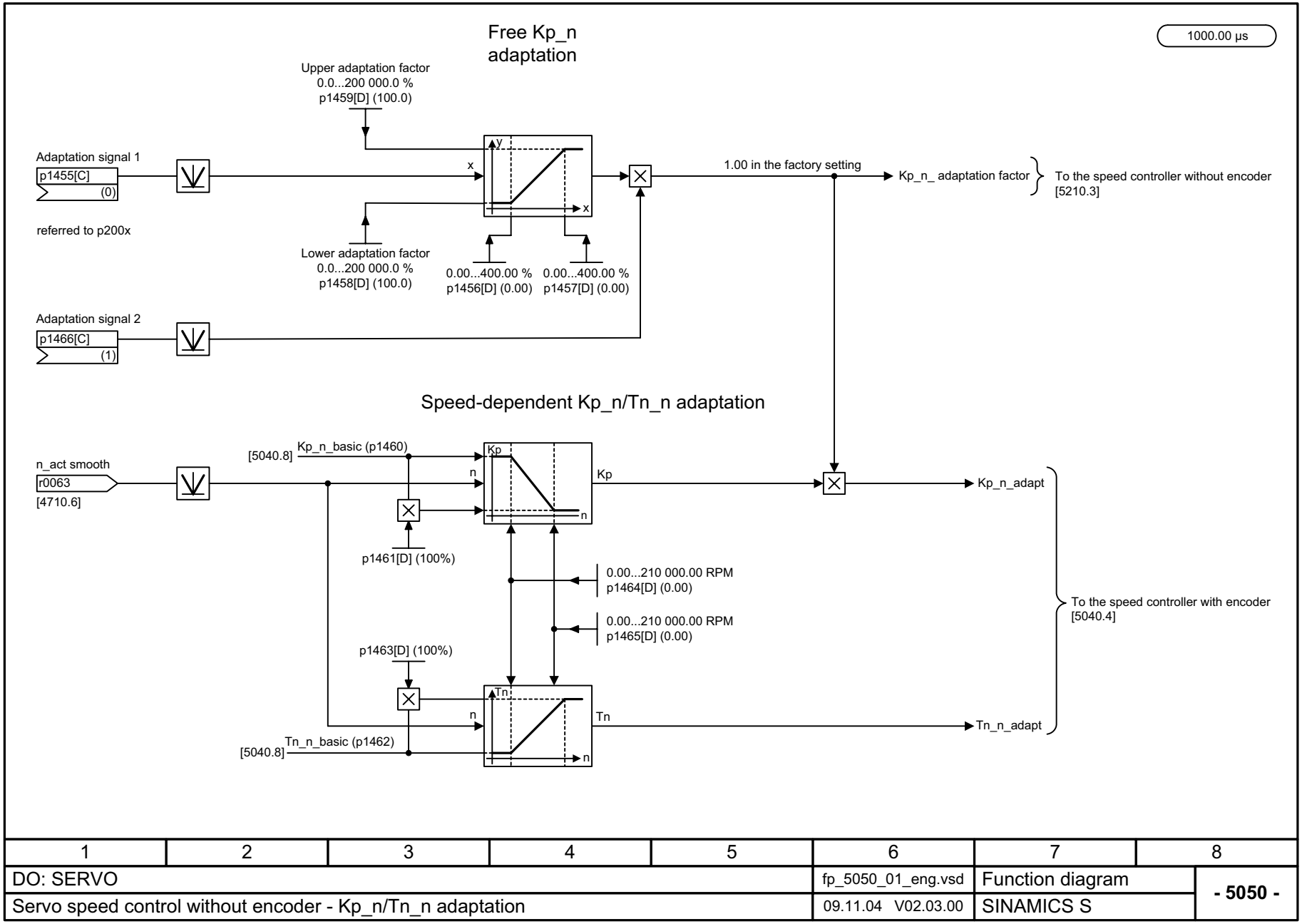

1	2	3	4	5	6	7	8
DO: SERVO					fp_5050_01_eng.vsd	Function diagram	- 5050 -
Servo speed control without encoder - Kp_n/Tn_n adaptation					09.11.04 V02.03.00	SINAMICS S	

Figure 2-99 5050 – Kp_n-/Tn_n adaptation

© Siemens AG, 2005. All rights reserved
SINAMICS S List Manual, Edition 06.2005

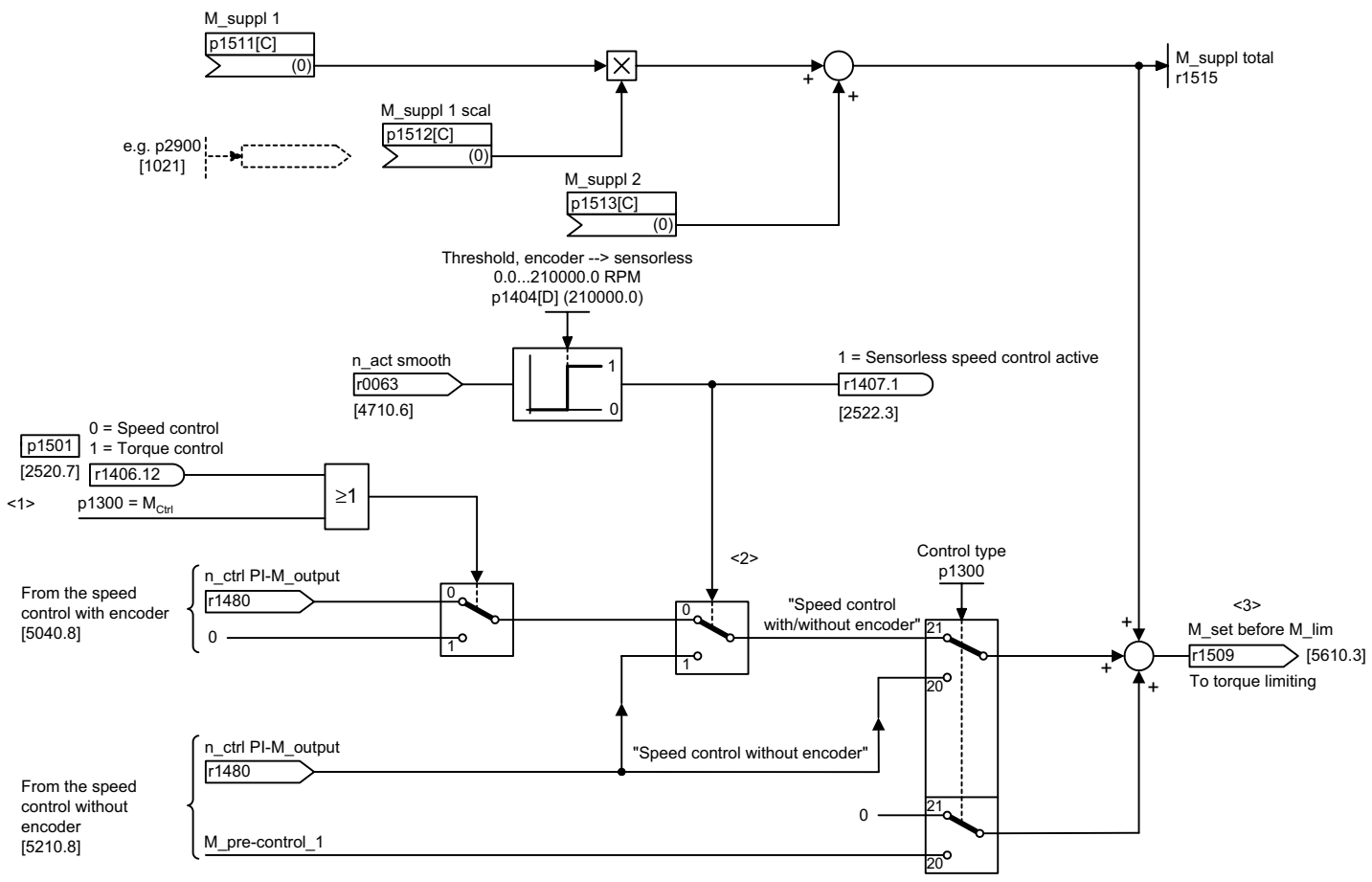

<1> The torque control can only be activated for operation with encoder.
An appropriate fault message is output, if:
1) Sensorless operation is active and closed-loop torque control is requested (r1406.12 = 0 --> 1).
2) Torque control is active and n_act smooth > p1404.
<2> Automatic changeover to sensorless operation, e.g. for extremely high-speed spindle drives.
<3> When the pulses are cancelled, r1509 is set to 0.

1	2	3	4	5	6	7	8
DO: SERVO					fp_5060_01_eng.vsd	Function diagram	- 5060 -
Servo speed control with encoder - torque setpoint, changeover control type					29.04.05 V02.03.00	SINAMICS S	

Figure 2-100 5060 – Torque setpoint, control type switchover

© Siemens AG, 2005. All rights reserved
SINAMICS S List Manual, Edition 06.2005

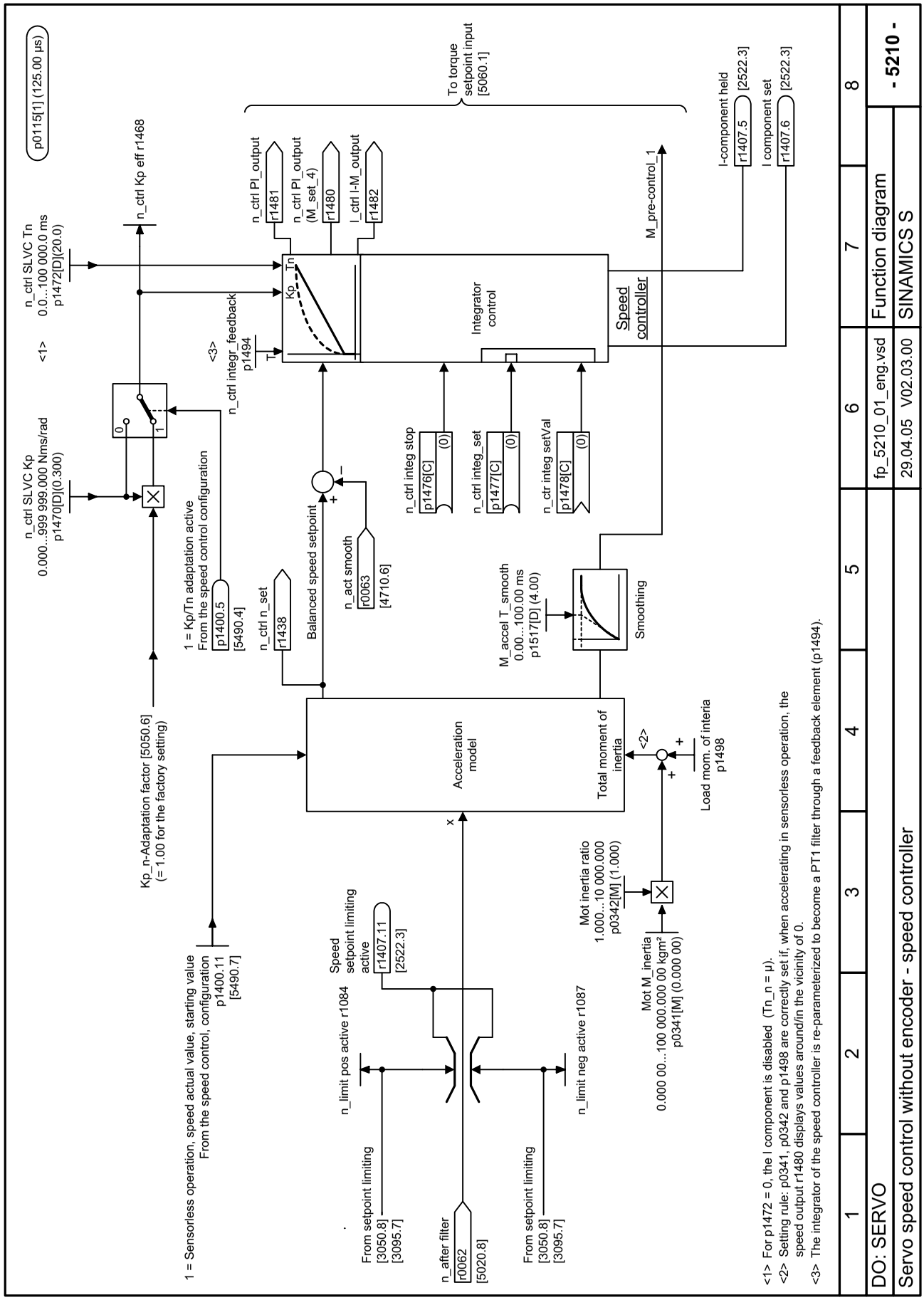

Figure 2-101 5210 – Speed controller without encoder

© Siemens AG, 2005. All rights reserved

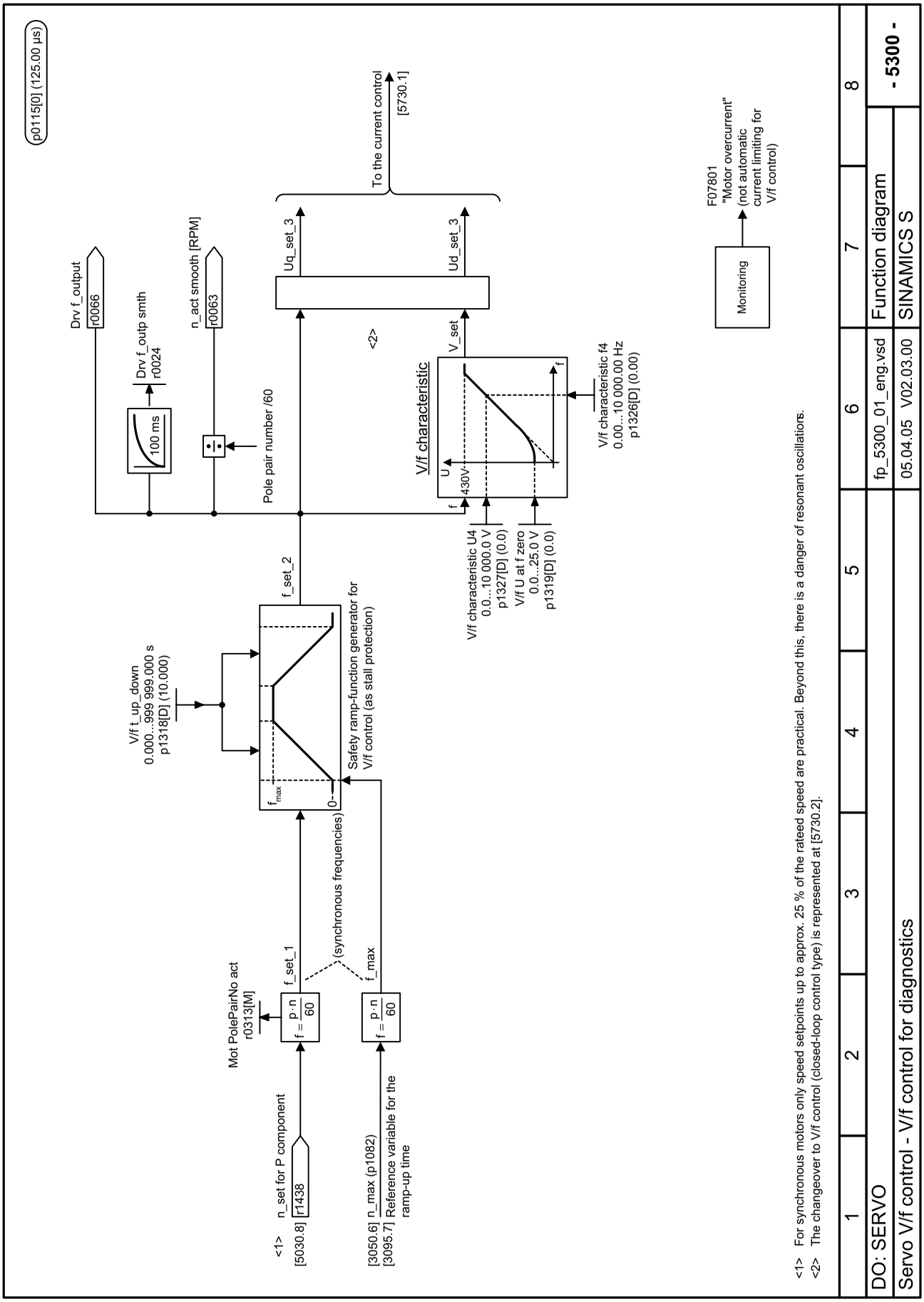

Figure 2-102 5300 – V/f control for diagnostics

© Siemens AG, 2005. All rights reserved
SINAMICS S List Manual, Edition 06.2005

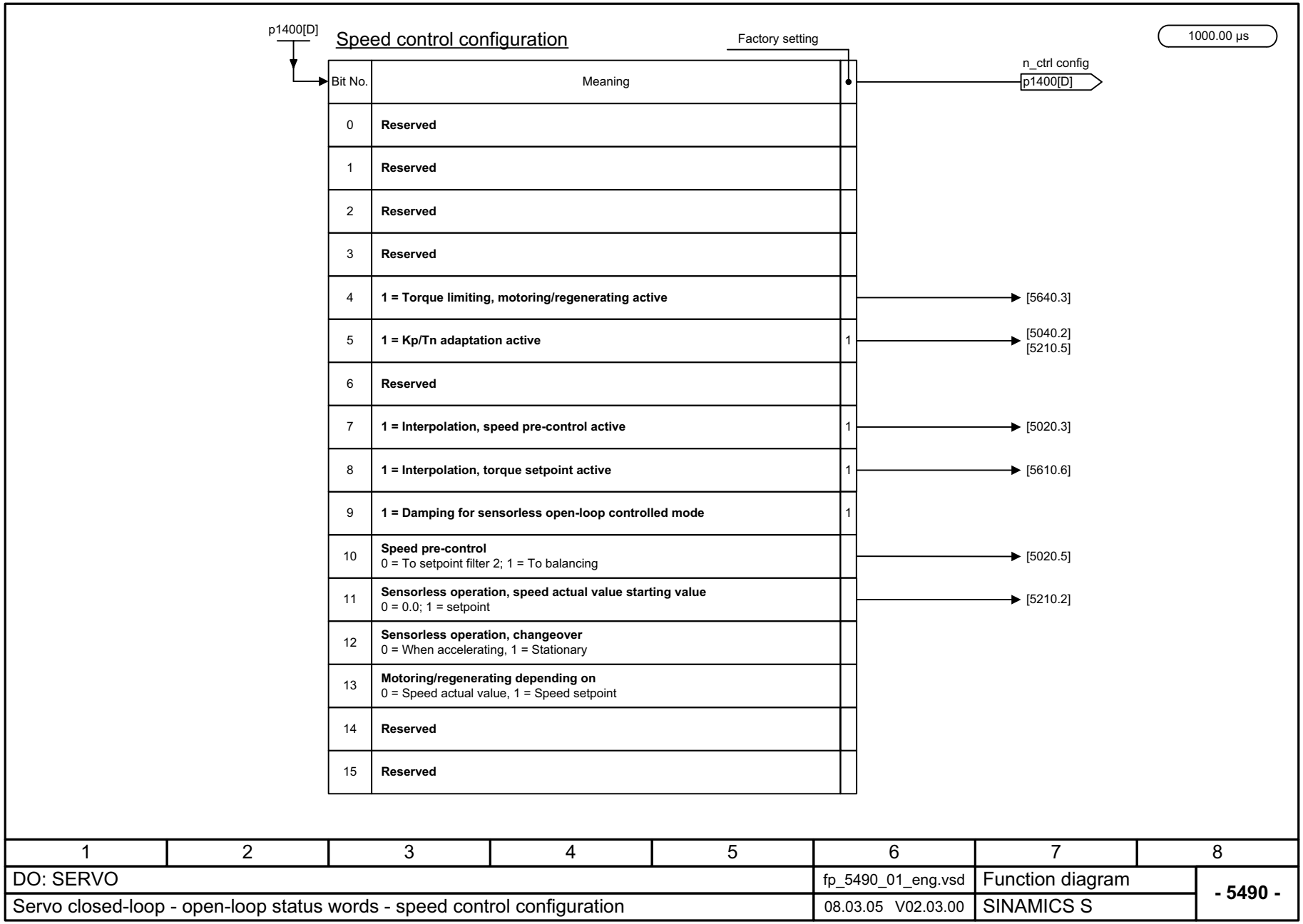

1	2	3	4	5	6	7	8
DO: SERVO					fp_5490_01_eng.vsd	Function diagram	- 5490 -
Servo closed-loop - open-loop status words - speed control configuration					08.03.05 V02.03.00	SINAMICS S	

Figure 2-103 5490 – Speed control configuration

© Siemens AG, 2005. All rights reserved
SINAMICS S List Manual, Edition 06.2005

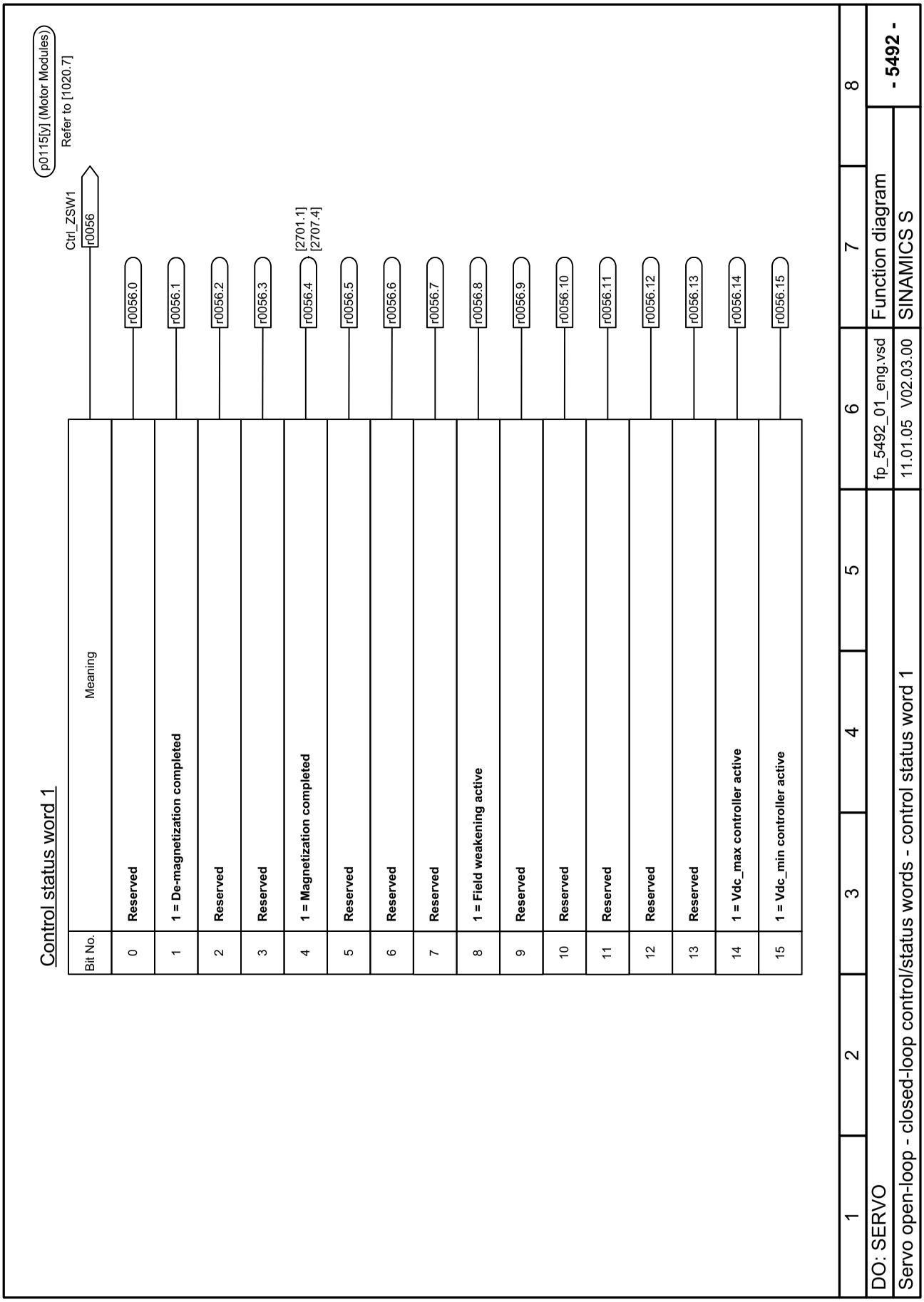

Figure 2-104 5492 – Closed-loop control status word 1

© Siemens AG, 2005. All rights reserved
SINAMICS S List Manual, Edition 06.2005

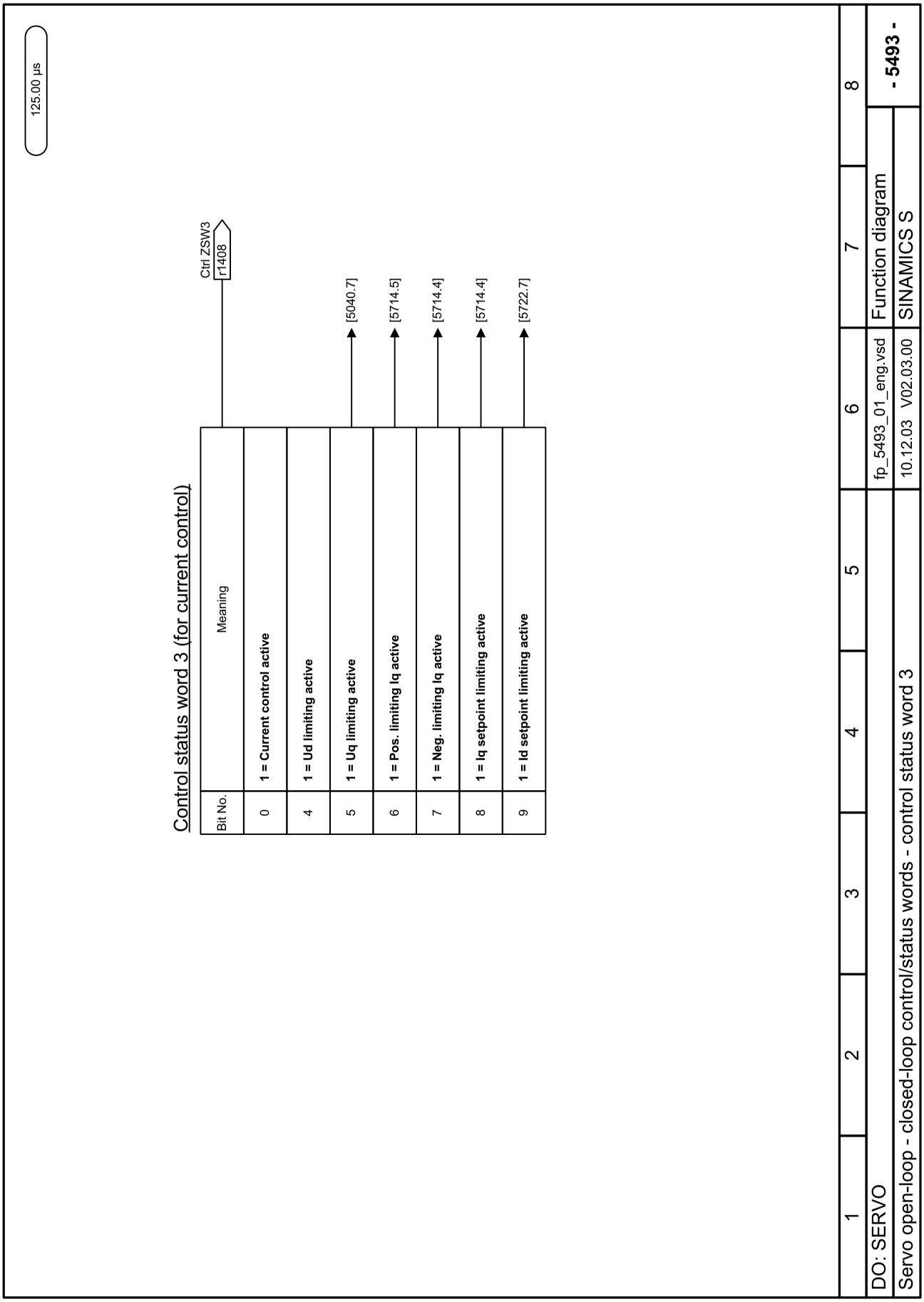

Figure 2-105 5493 – Closed-loop control status word 3

© Siemens AG, 2005. All rights reserved

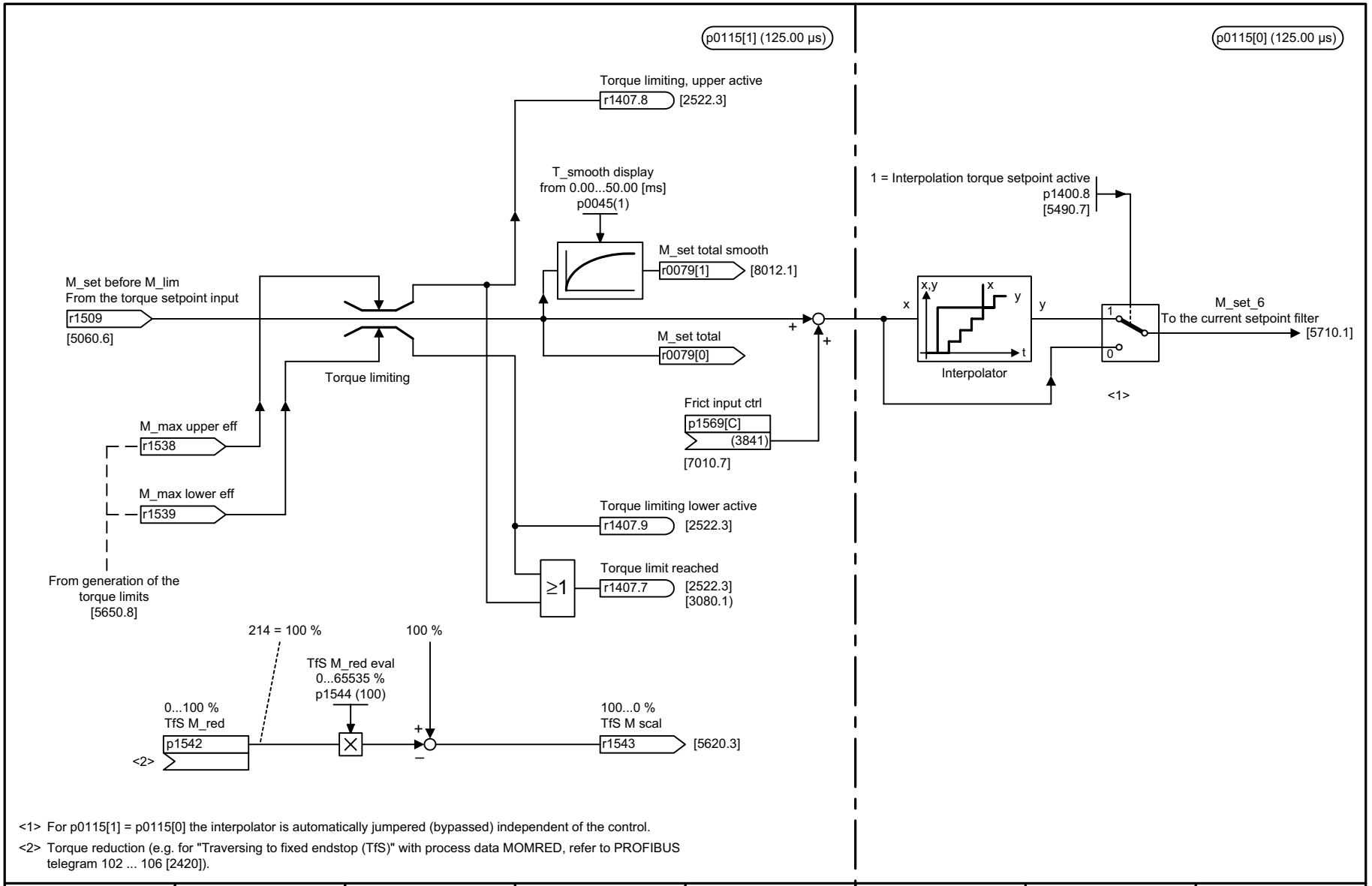

<1> For p0115[1] = p0115[0] the interpolator is automatically jumpered (bypassed) independent of the control.

<2> Torque reduction (e.g. for "Traversing to fixed endstop (TfS)" with process data MOMRED, refer to PROFIBUS telegram 102 ... 106 [2420]).

1	2	3	4	5	6	7	8
DO: SERVO					fp_5610_01_eng.vsd	Function diagram	- 5610 -
Servo torque limits - torque limiting/reduction/interpolator					12.07.05 V02.03.00	SINAMICS S	

Figure 2-106 5610 – Torque limiting/reduction/interpolator

© Siemens AG, 2005. All rights reserved
SINAMICS S List Manual, Edition 06.2005

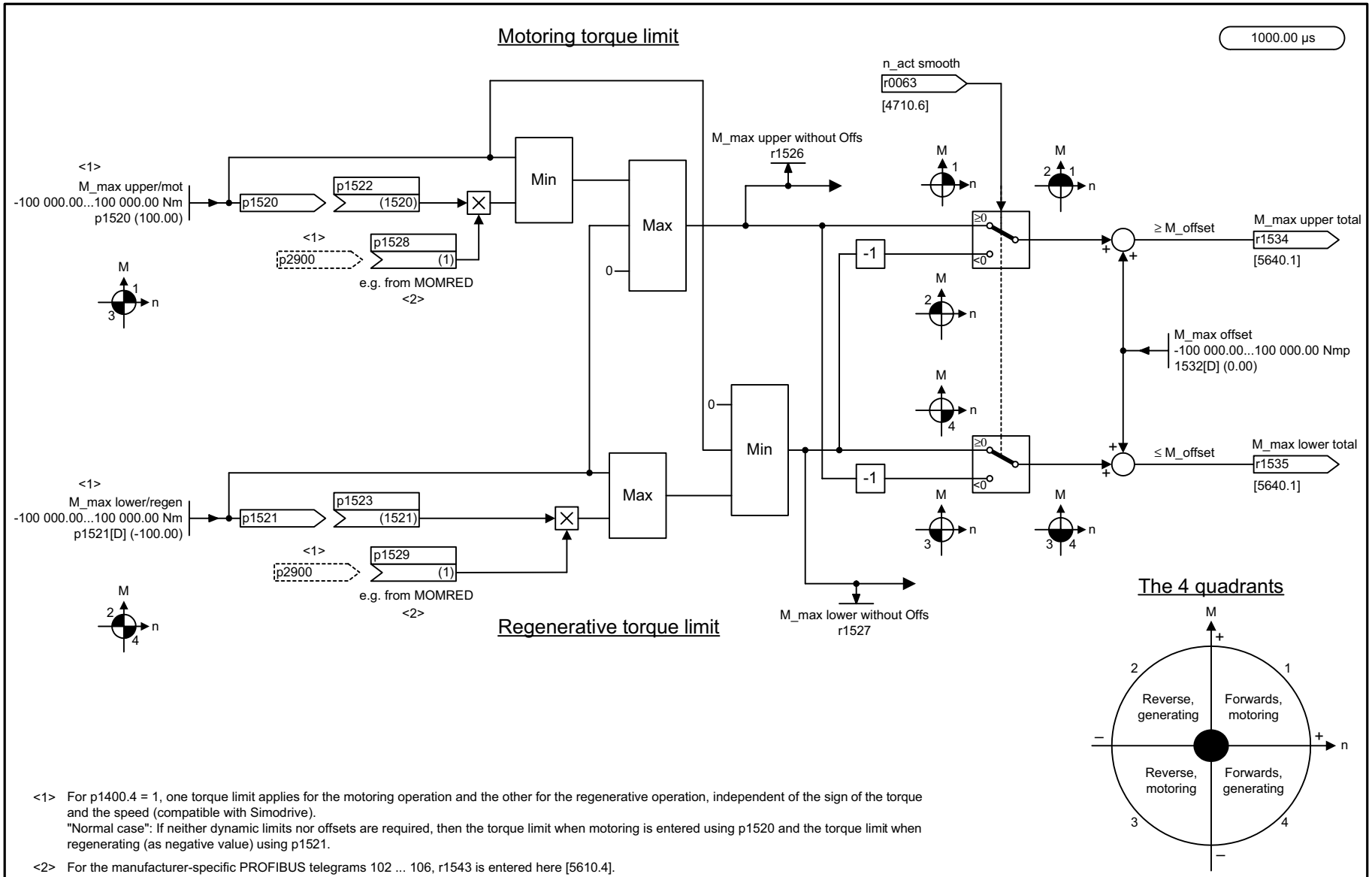

<1> For p1400.4 = 1, one torque limit applies for the motoring operation and the other for the regenerative operation, independent of the sign of the torque and the speed (compatible with Simodrive).
"Normal case": If neither dynamic limits nor offsets are required, then the torque limit when motoring is entered using p1520 and the torque limit when regenerating (as negative value) using p1521.

<2> For the manufacturer-specific PROFIBUS telegrams 102 ... 106, r1543 is entered here [5610.4].

1	2	3	4	5	6	7	8
DO: SERVO					fp_5620_01_eng.vsd	Function diagram	- 5620 -
Servo torque limitis - motoring/regenerating torque limit					05.10.04 V02.03.00	SINAMICS S	

Figure 2-107 5620 – Motor/generator torque limit

© Siemens AG, 2005. All rights reserved
SINAMICS S List Manual, Edition 06.2005

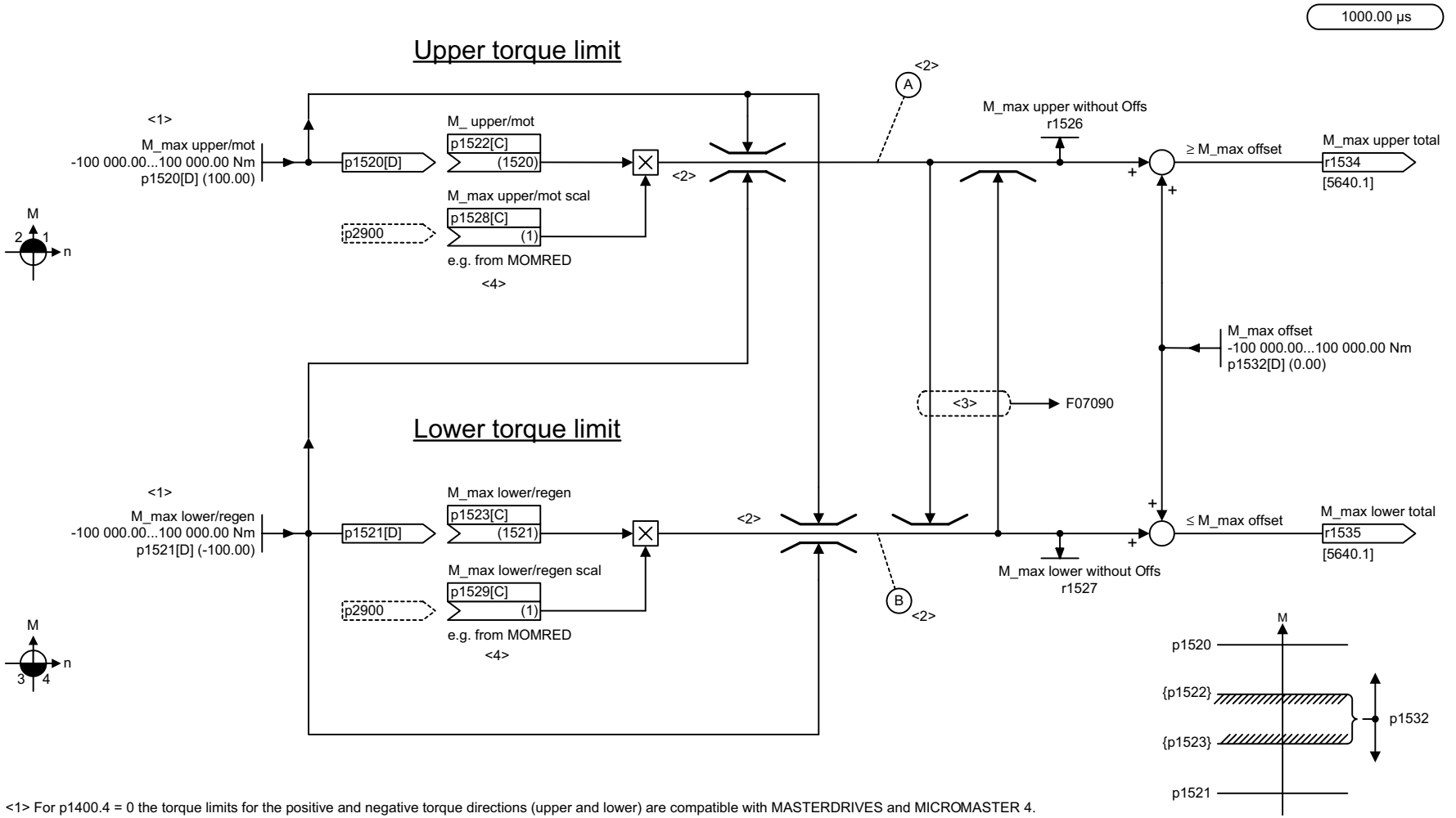

<1> For p1400.4 = 0 the torque limits for the positive and negative torque directions (upper and lower) are compatible with MASTERDRIVES and MICROMASTER 4.
"normal case" If dynamic limits and an offset are not required, then the upper torque limit is entered using p1520 and the lower torque limit (as negative value) using p1521.

<2> Danger note:
Negative values at (A) or positive values at (B) represent a minimum torque for the other torque direction and can cause the motor to accelerate uncontrollably.

<3> The limiters ensure that the limits cannot mutually "overtake" one another. For (A) < (B) Fault F07090 is initiated that can also be disabled.

<4> For the manufacturer-specific PROFIBUS telegrams 102 ... 106, r1543 is entered here [5610.4].

1	2	3	4	5	6	7	8
DO: SERVO					fp_5630_01_eng.vsd	Function diagram	- 5630 -
Servo torque limit - upper/lower torque limits					05.10.04 V02.03.00	SINAMICS S	

Figure 2-108 5630 – Upper/lower torque limit

© Siemens AG, 2005. All rights reserved
SINAMICS S List Manual, Edition 06.2005

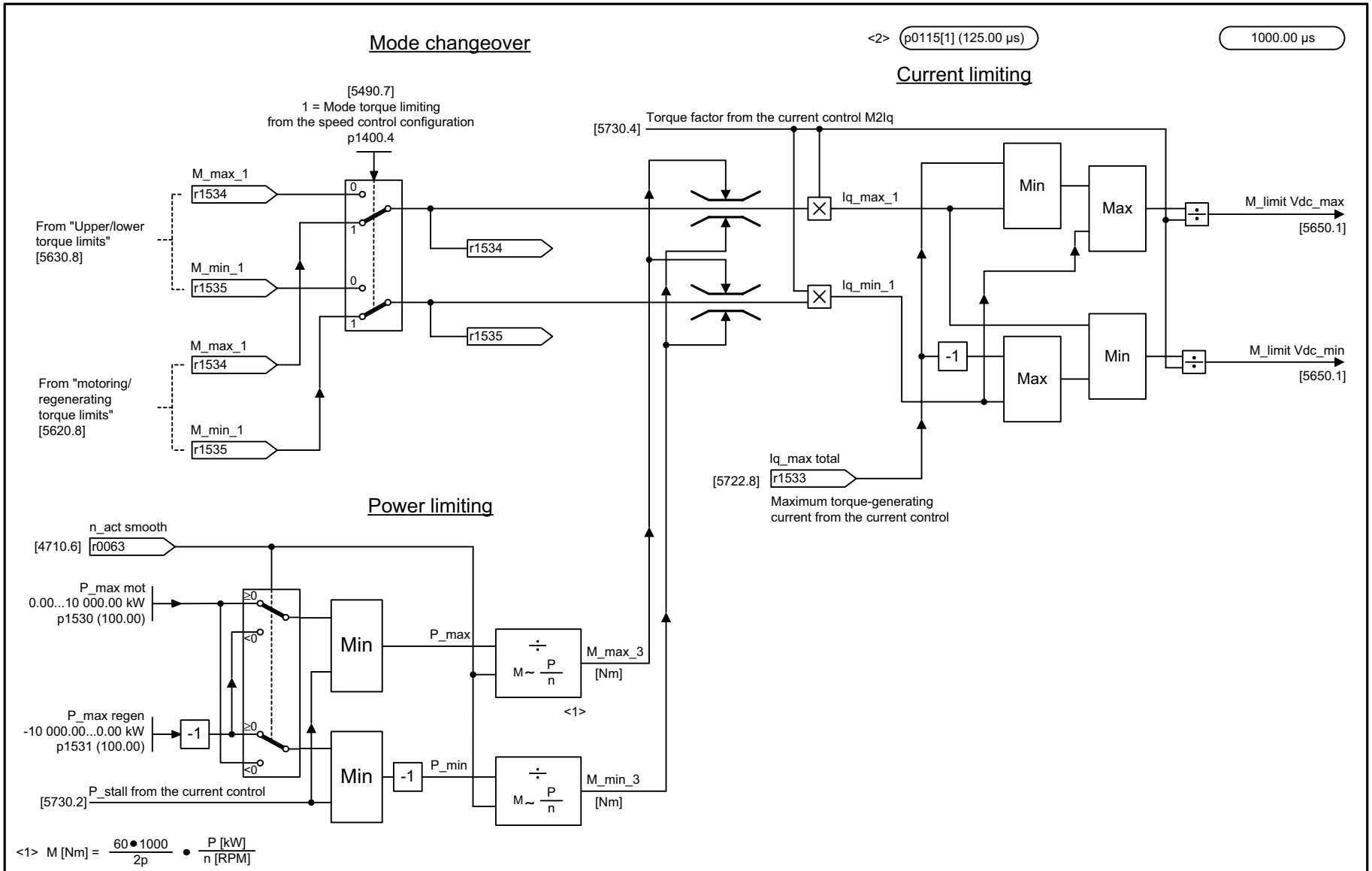

1	2	3	4	5	6	7	8
DO: SERVO					fp_5640_01_eng.vsd	Function diagram	- 5640 -
Servo torque limits - mode changeover, power/current limiting					08.12.04 V02.03.00	SINAMICS S	

Figure 2-109 5640 – Mode changeover, power/current limiting

© Siemens AG, 2005. All rights reserved
SINAMICS S List Manual, Edition 06.2005

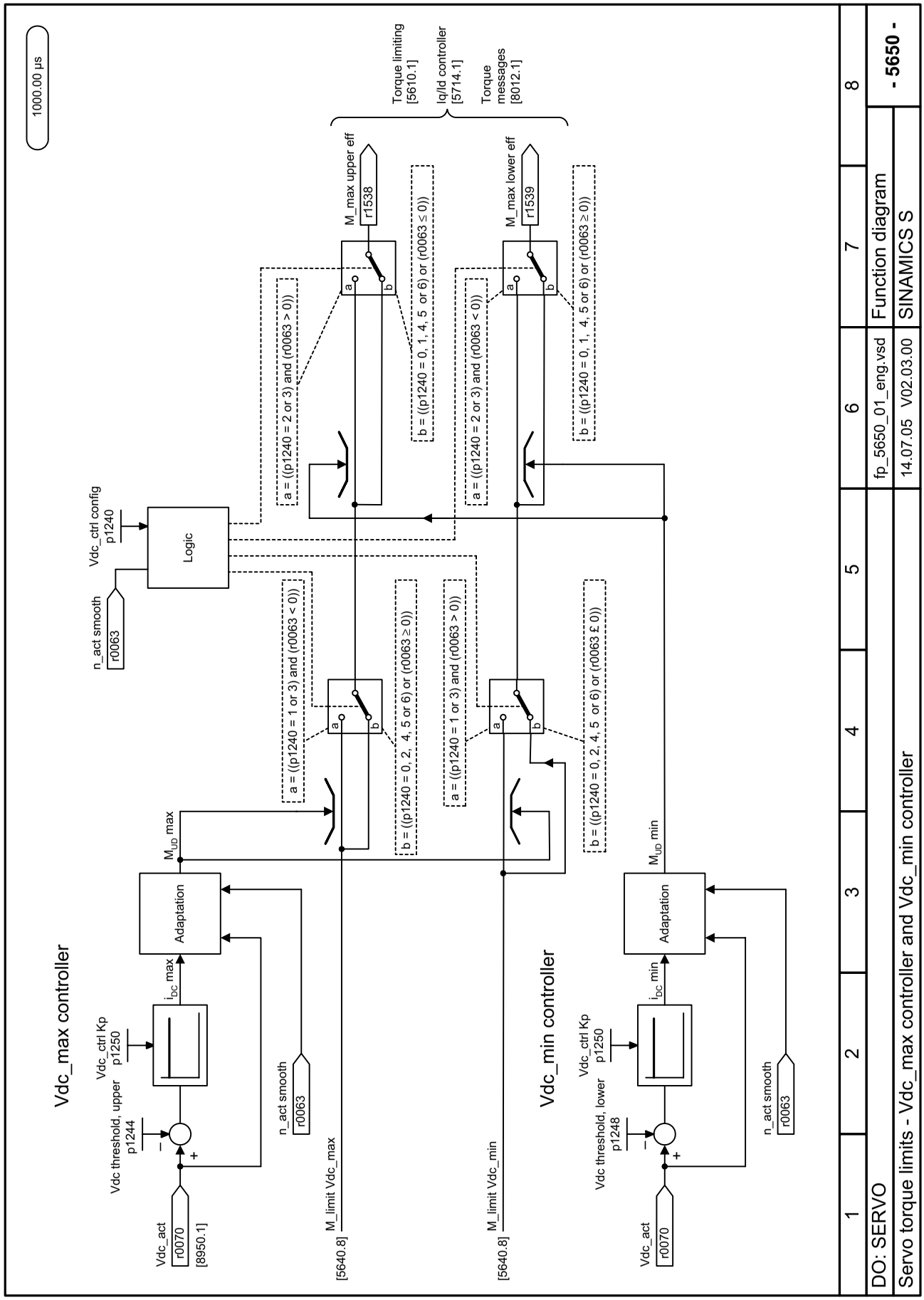

Figure 2-110 5650 – Vdc_max controller and Vdc_min controller

© Siemens AG, 2005. All rights reserved
SINAMICS S List Manual, Edition 06.2005

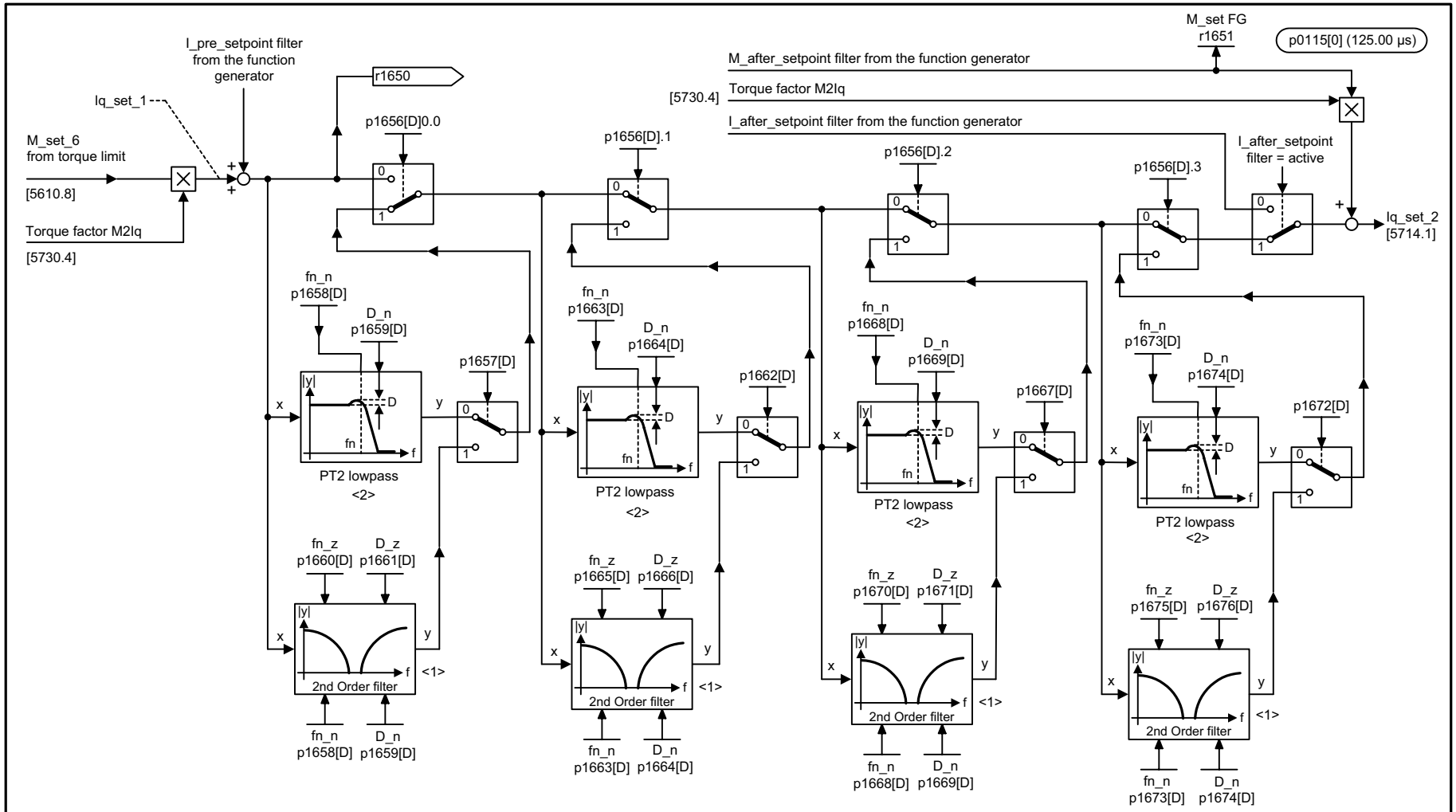

<1> General 2nd order filter (detailed representation at [1024]).
<2> PT2 lowpass (detailed representation at [1024]).

1	2	3	4	5	6	7	8
DO: SERVO					fp_5710_01_eng.vsd	Function diagram	- 5710 -
Servo current control - current setpoint filter					11.02.05 V02.03.00	SINAMICS S	

Figure 2-111 5710 – Current setpoint filter

© Siemens AG, 2005. All rights reserved
SINAMICS S List Manual, Edition 06.2005

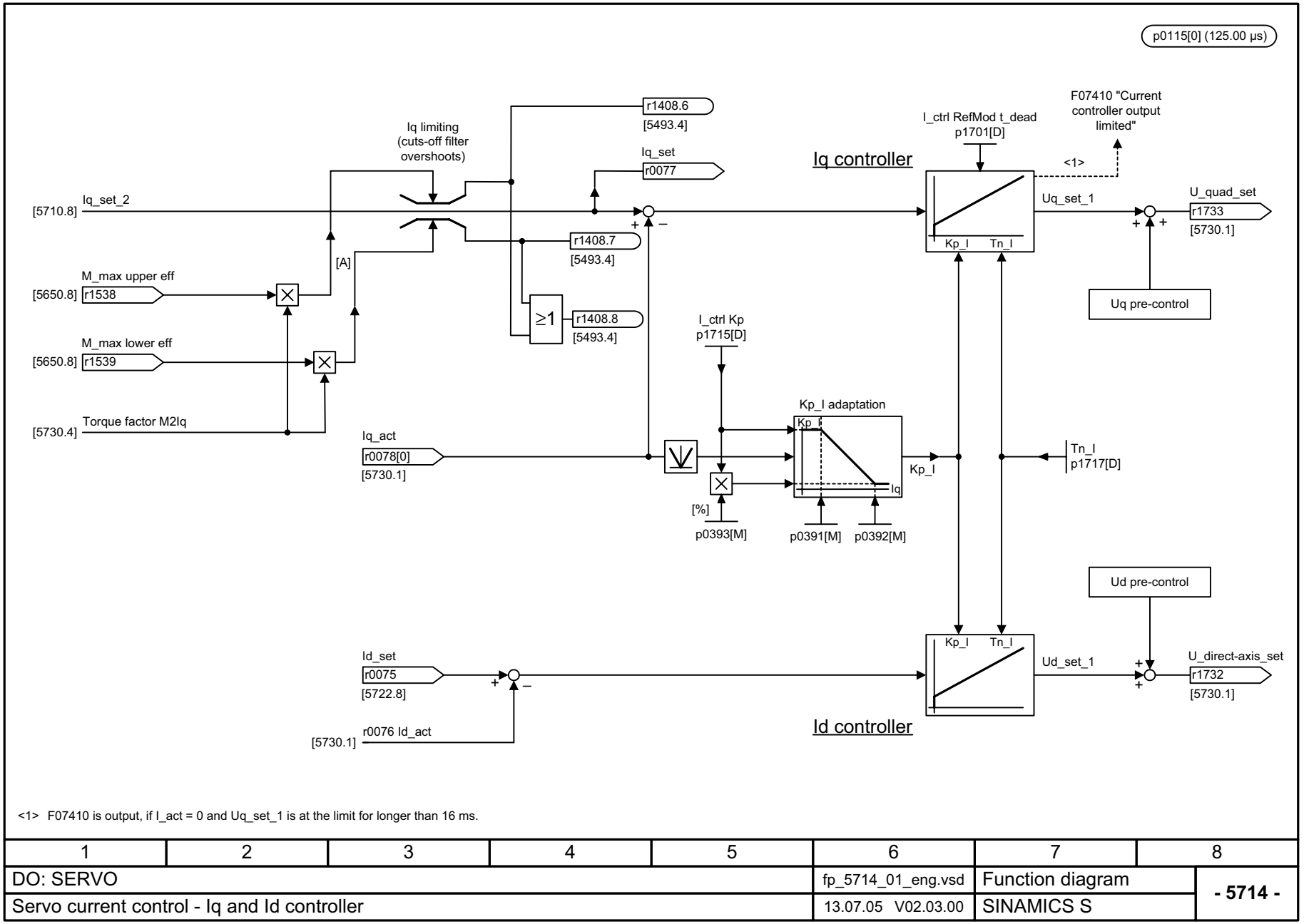

<1> F07410 is output, if I_act = 0 and Uq_set_1 is at the limit for longer than 16 ms.

1	2	3	4	5	6	7	8
DO: SERVO					fp_5714_01_eng.vsd	Function diagram	- 5714 -
Servo current control - Iq and Id controller					13.07.05 V02.03.00	SINAMICS S	

Figure 2-112 5714 – Iq and Id controller

© Siemens AG, 2005. All rights reserved
SINAMICS S List Manual, Edition 06.2005

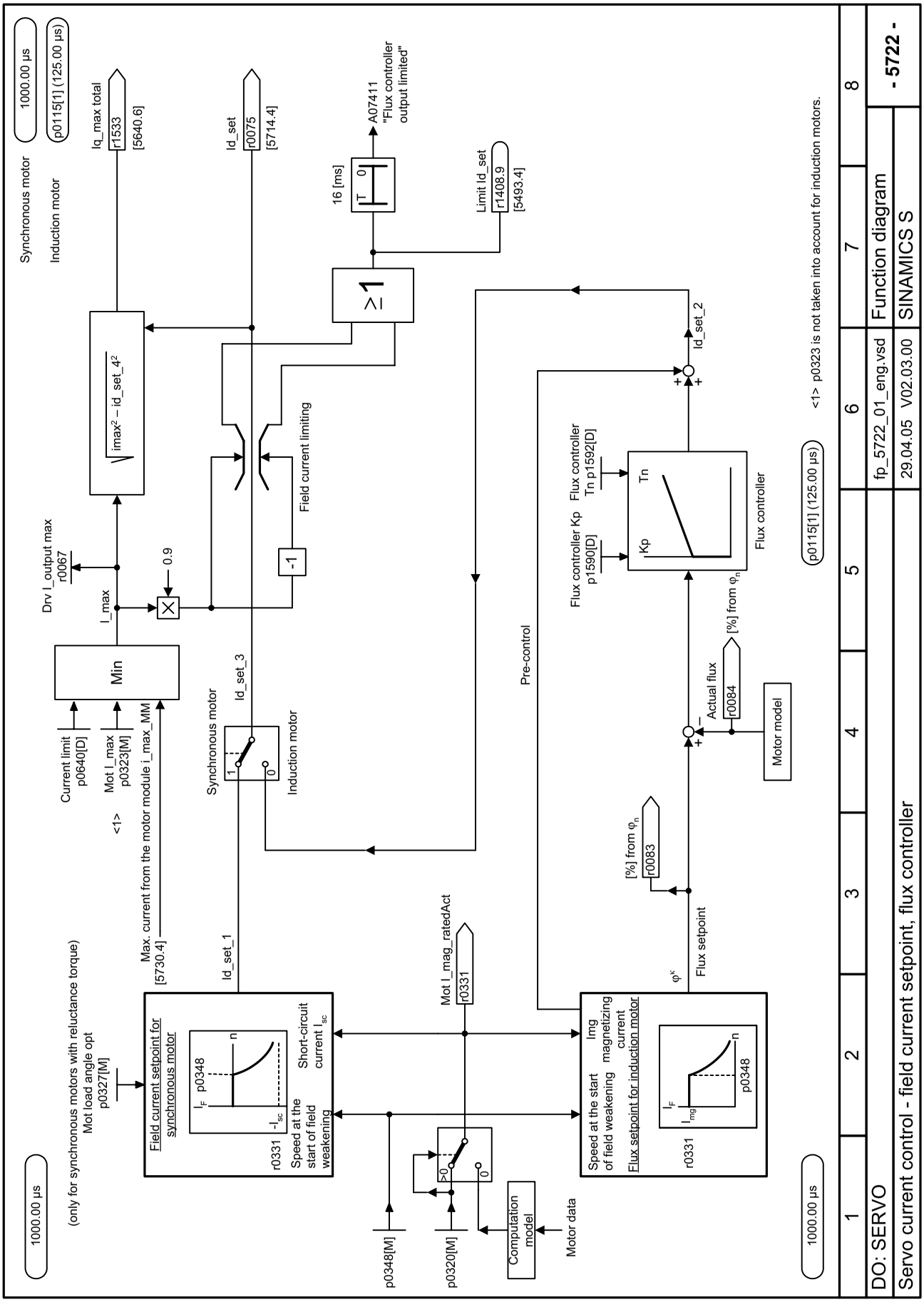

Figure 2-113 5722 – Specified field current, flux controller

© Siemens AG, 2005. All rights reserved

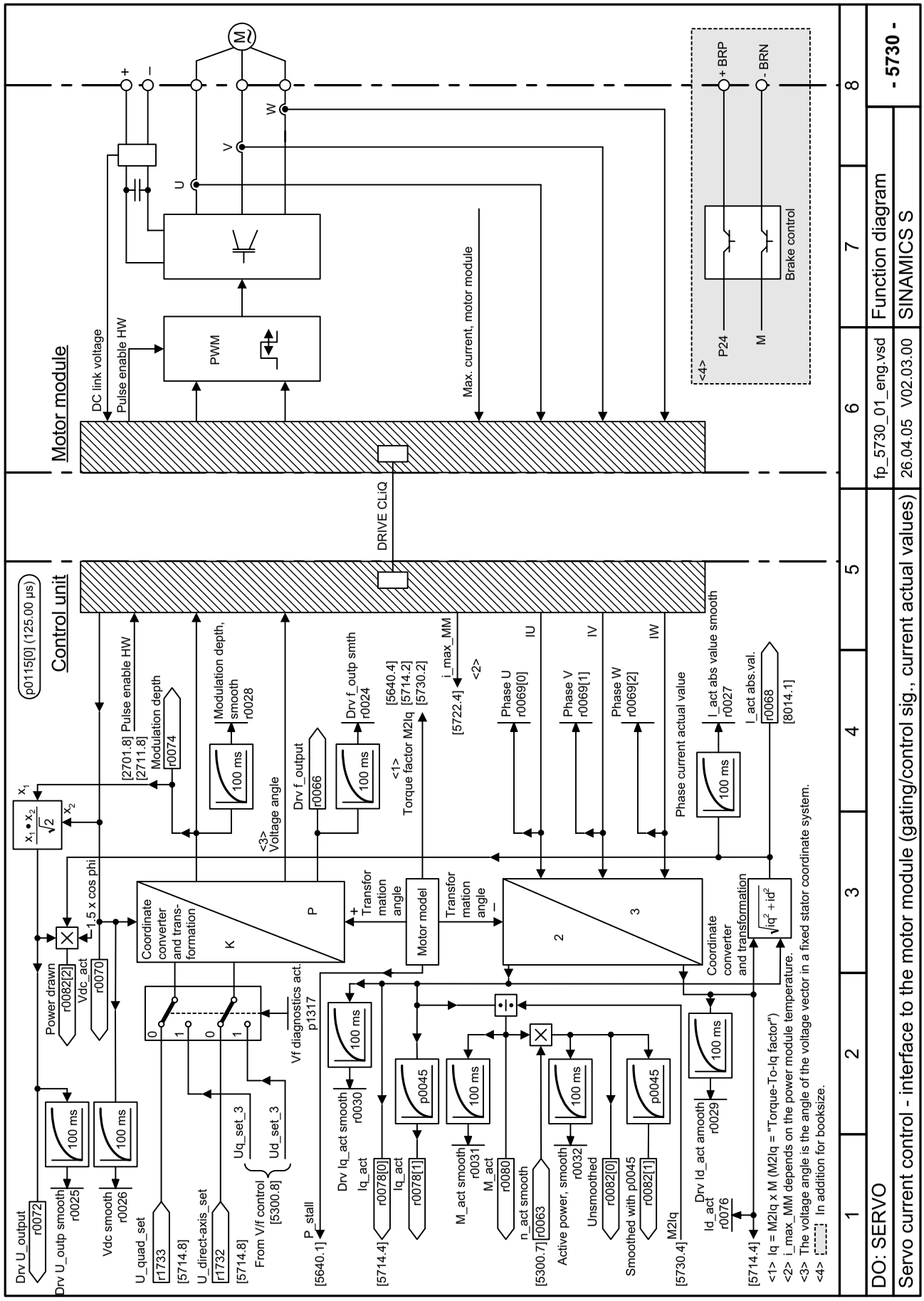

Figure 2-114 5730 – Interface to the Motor Module (gating signals, current actual values)

© Siemens AG, 2005. All rights reserved
SINAMICS S List Manual, Edition 06.2005

2.14 VECTOR control

Function diagrams

6004 – Raw signal and temperature measurement	2-846
6010 – Actual speed value and rotor position measurement, motor encoder (encoder 1)	2-847
6030 – Speed setpoint, droop	2-848
6031 – Pre-control balancing for reference/acceleration model	2-849
6040 – Speed controller with/without encoder	2-850
6050 – Kp_n-/Tn_n adaptation	2-851
6060 – Torque setpoint	2-852
6220 – Vdc_max controller and Vdc_min controller	2-853
6300 – V/f characteristic and voltage boost	2-854
6310 – Resonance damping and slip compensation	2-855
6320 – Vdc_max controller and Vdc_min controller	2-856
6490 – Speed control configuration	2-857
6491 – Flux control configuration	2-858
6492 – Closed-loop control status word 1	2-859
6493 – Closed-loop control status word 3	2-860
6630 – Upper/lower torque limit	2-861
6640 – Current/power/torque limits	2-862
6710 – Current setpoint filter	2-863
6714 – Iq and Id controller	2-864
6722 – Field weakening characteristic, Id setpoint	2-865
6723 – Field weakening controller, flux controller for induction motor (p0300 = 1)	2-866
6724 – Field weakening controller for synchronous motor (p0300 = 2)	2-867
6730 – Interface to Motor Module for induction motor (p0300 = 1)	2-868
6731 – Interface to Motor Module for synchronous motor (p0300 = 2)	2-869
6799 – Display signals	2-870

© Siemens AG, 2005. All rights reserved

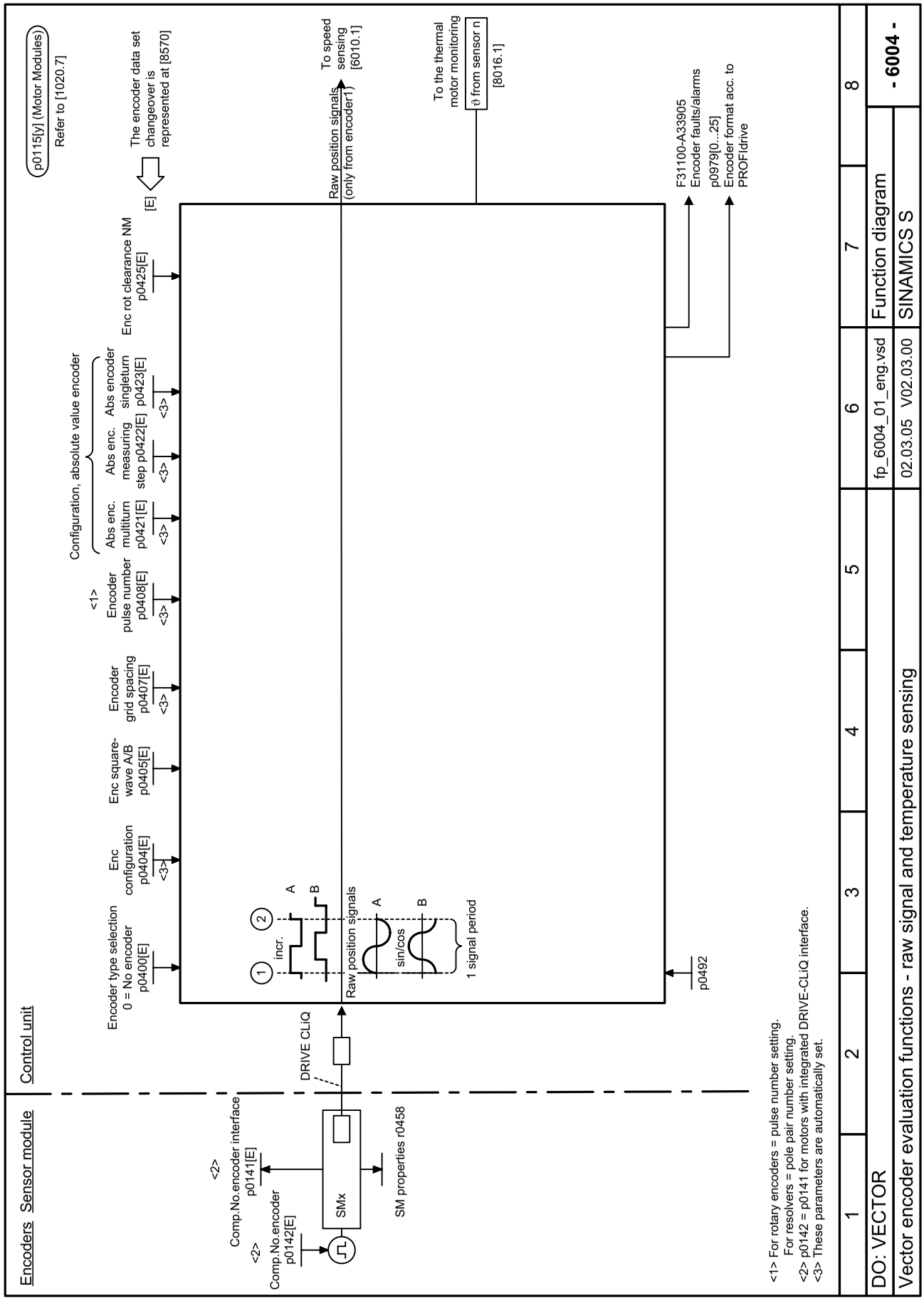

Figure 2-115 6004 – Raw signal and temperature measurement

© Siemens AG, 2005. All rights reserved

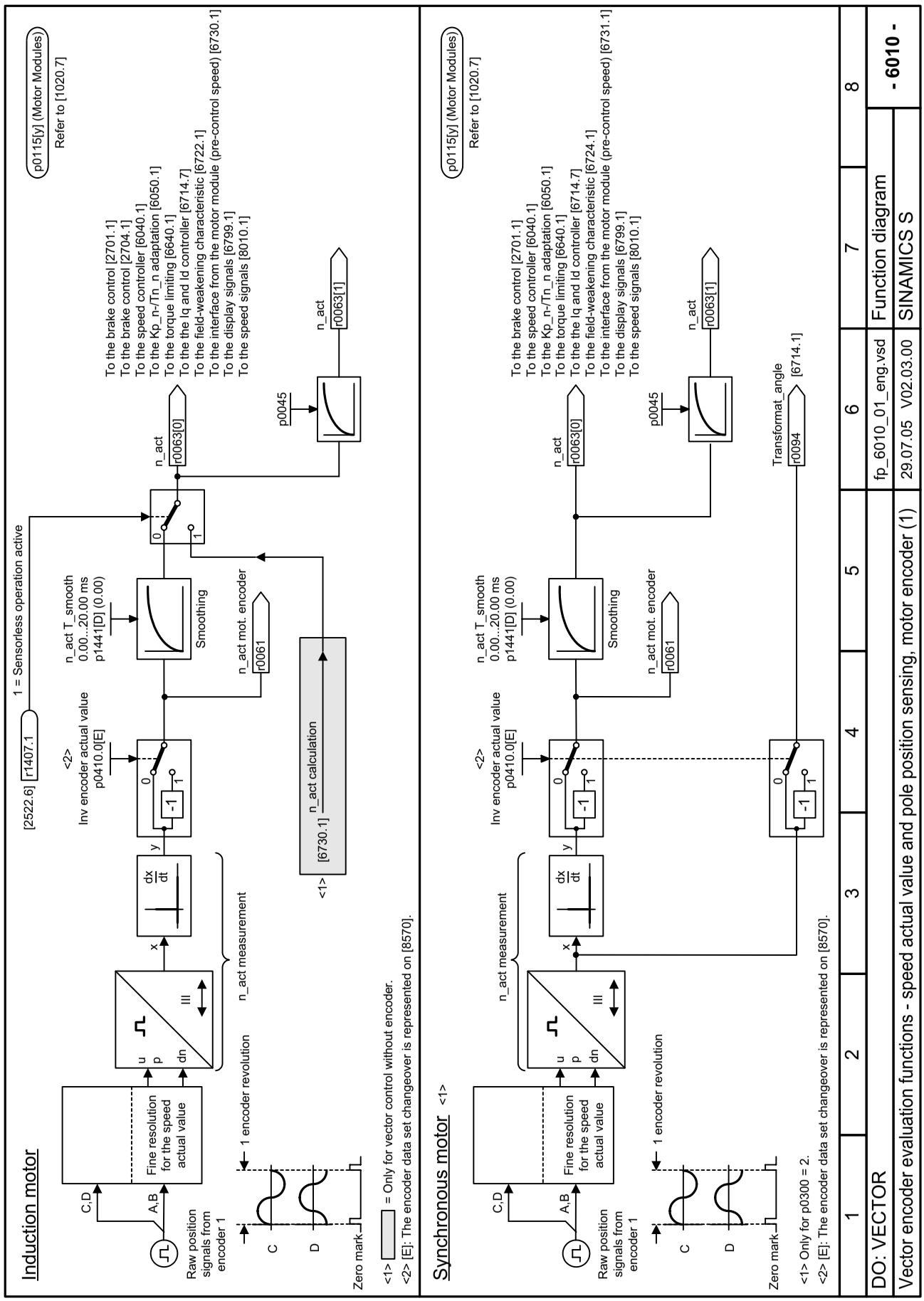

Figure 2-116 6010 – Actual speed value and rotor position measurement, motor encoder (encoder 1)

© Siemens AG, 2005. All rights reserved

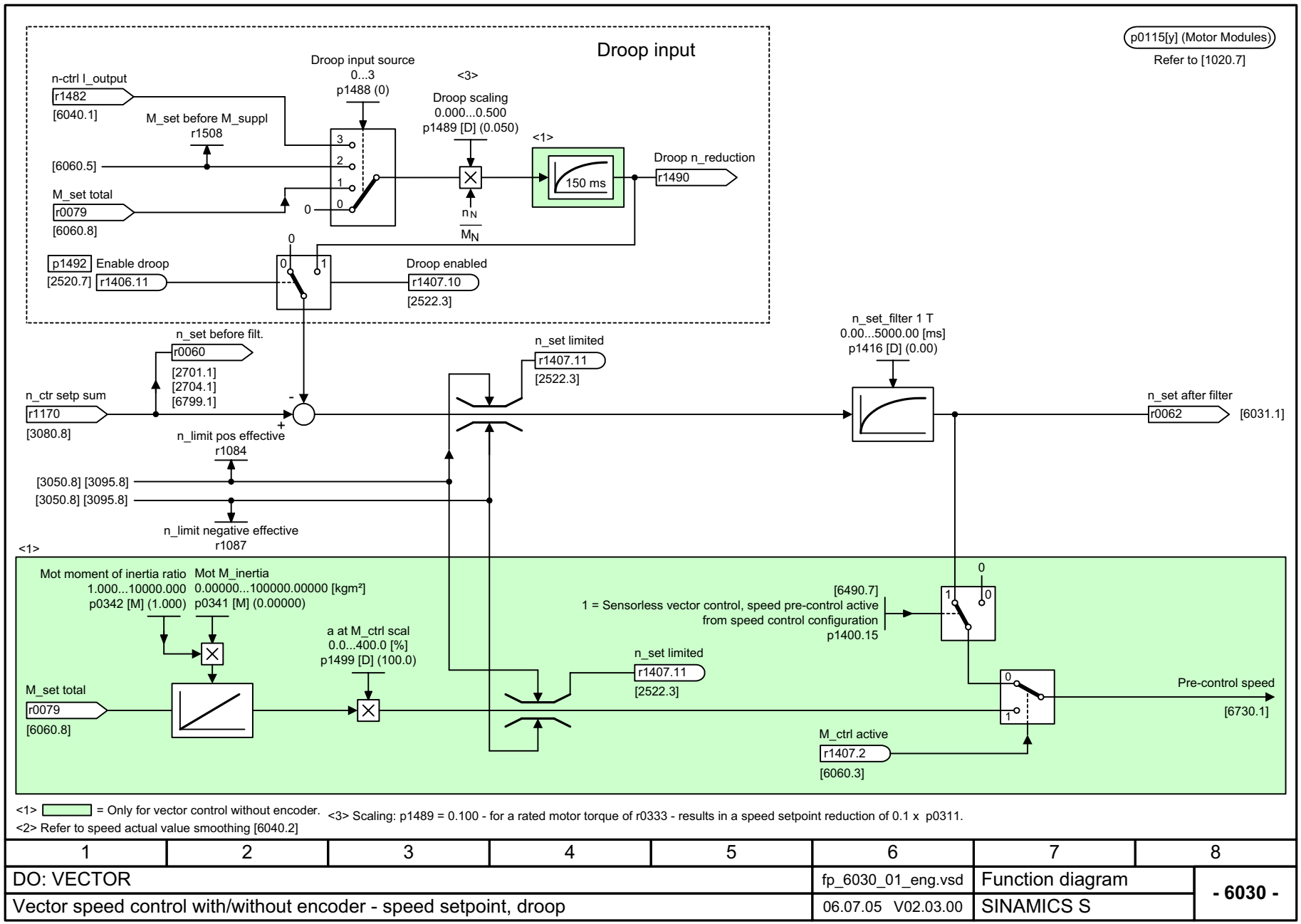

<1> = Only for vector control without encoder. <3> Scaling: p1489 = 0.100 - for a rated motor torque of r0333 - results in a speed setpoint reduction of 0.1 x p0311.
<2> Refer to speed actual value smoothing [6040.2]

1	2	3	4	5	6	7	8
DO: VECTOR					fp_6030_01_eng.vsd	Function diagram	- 6030 -
Vector speed control with/without encoder - speed setpoint, droop					06.07.05 V02.03.00	SINAMICS S	

Figure 2-117 6030 – Speed setpoint, droop

© Siemens AG, 2005. All rights reserved
SINAMICS S List Manual, Edition 06.2005

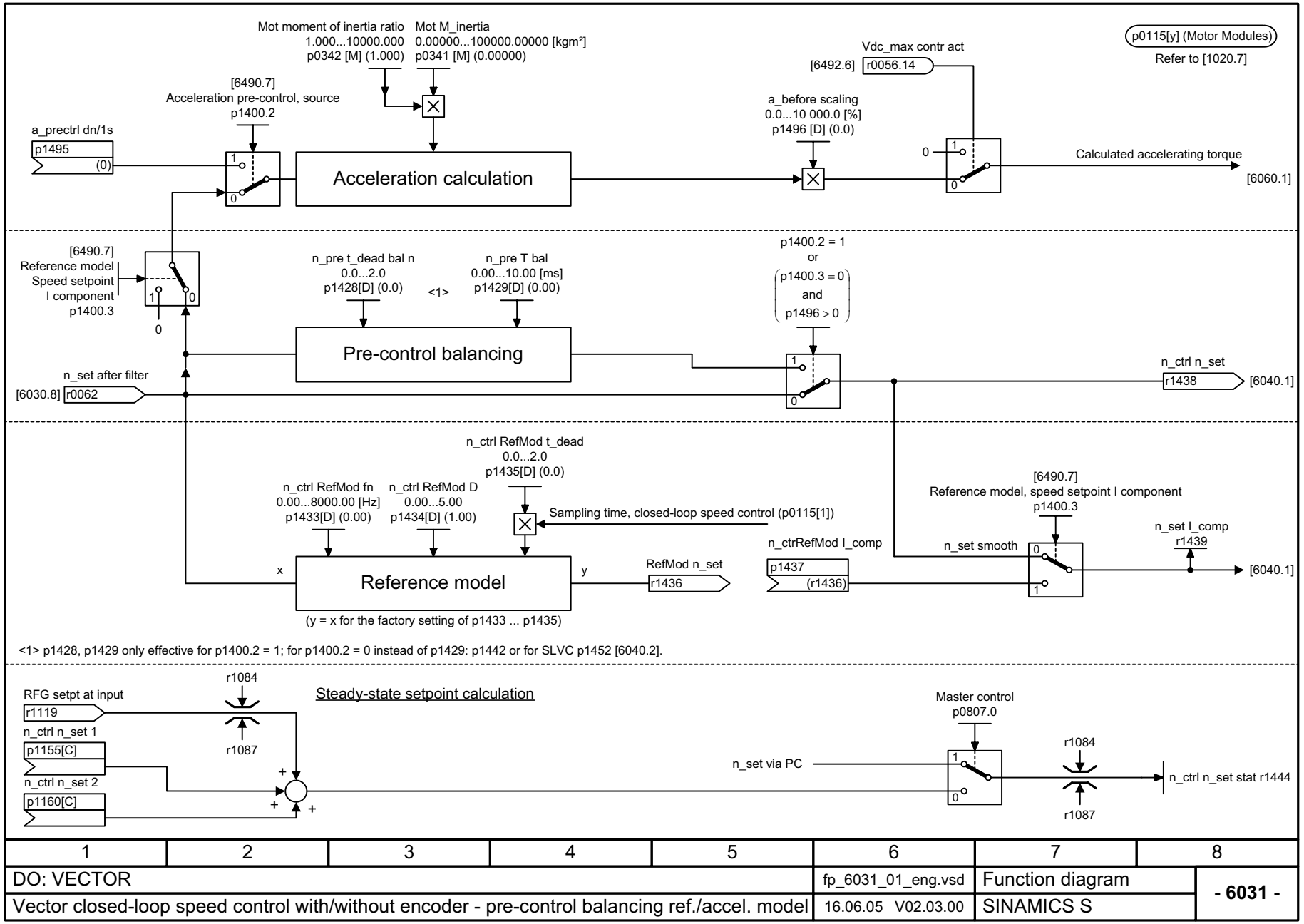

1	2	3	4	5	6	7	8
DO: VECTOR					fp_6031_01_eng.vsd	Function diagram	- 6031 -
Vector closed-loop speed control with/without encoder - pre-control balancing ref./accel. model					16.06.05 V02.03.00	SINAMICS S	

Figure 2-118 6031 – Pre-control balancing for reference/acceleration model

© Siemens AG, 2005. All rights reserved
SINAMICS S List Manual, Edition 06.2005

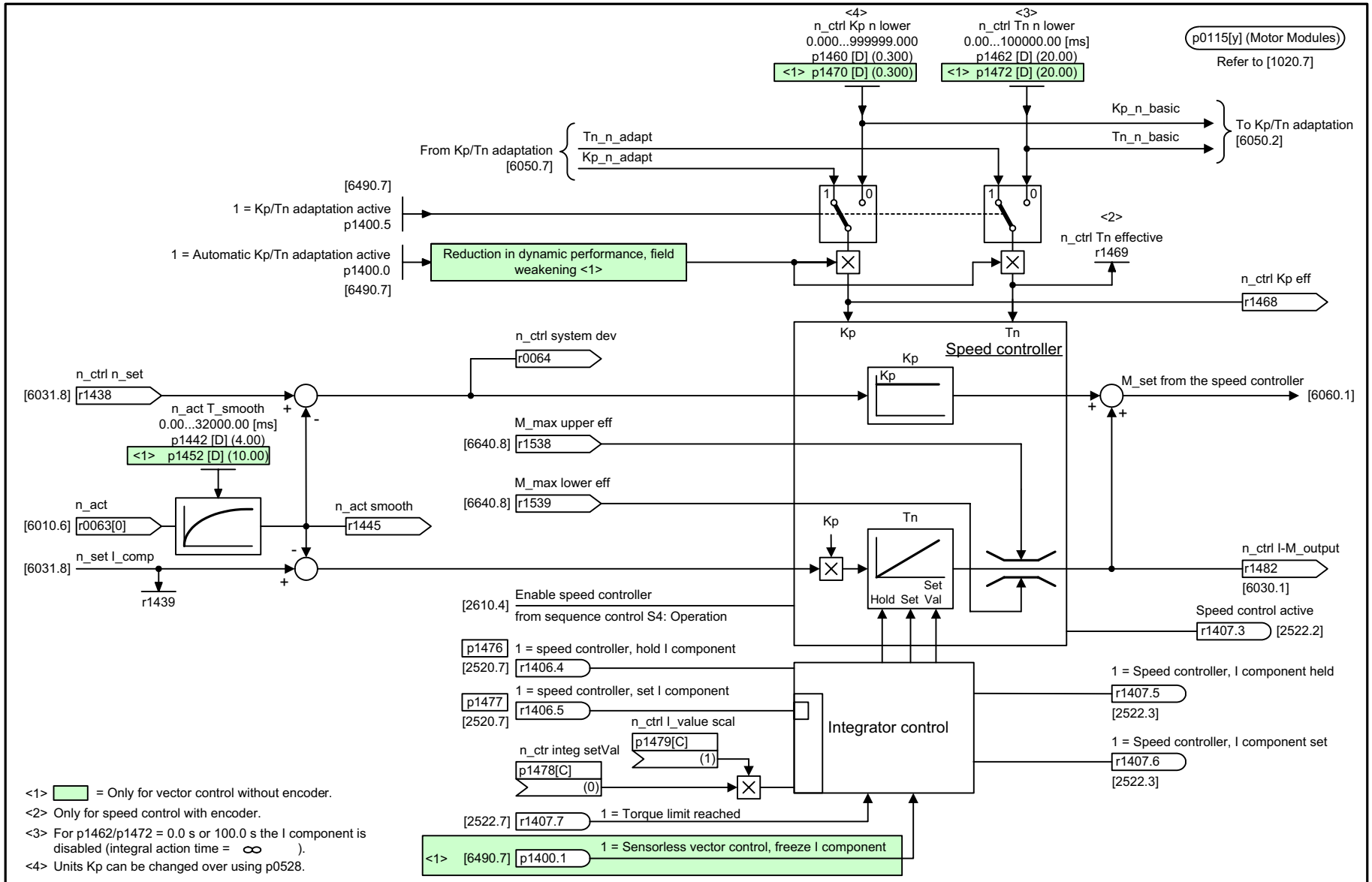

1	2	3	4	5	6	7	8
DO: VECTOR					fp_6040_01_eng.vsd	Function diagram	- 6040 -
Vector speed control with/without encoder - speed controller					29.07.05 V02.03.00	SINAMICS S	

Figure 2-119 6040 – Speed controller with/without encoder

© Siemens AG, 2005. All rights reserved
SINAMICS S List Manual, Edition 06.2005

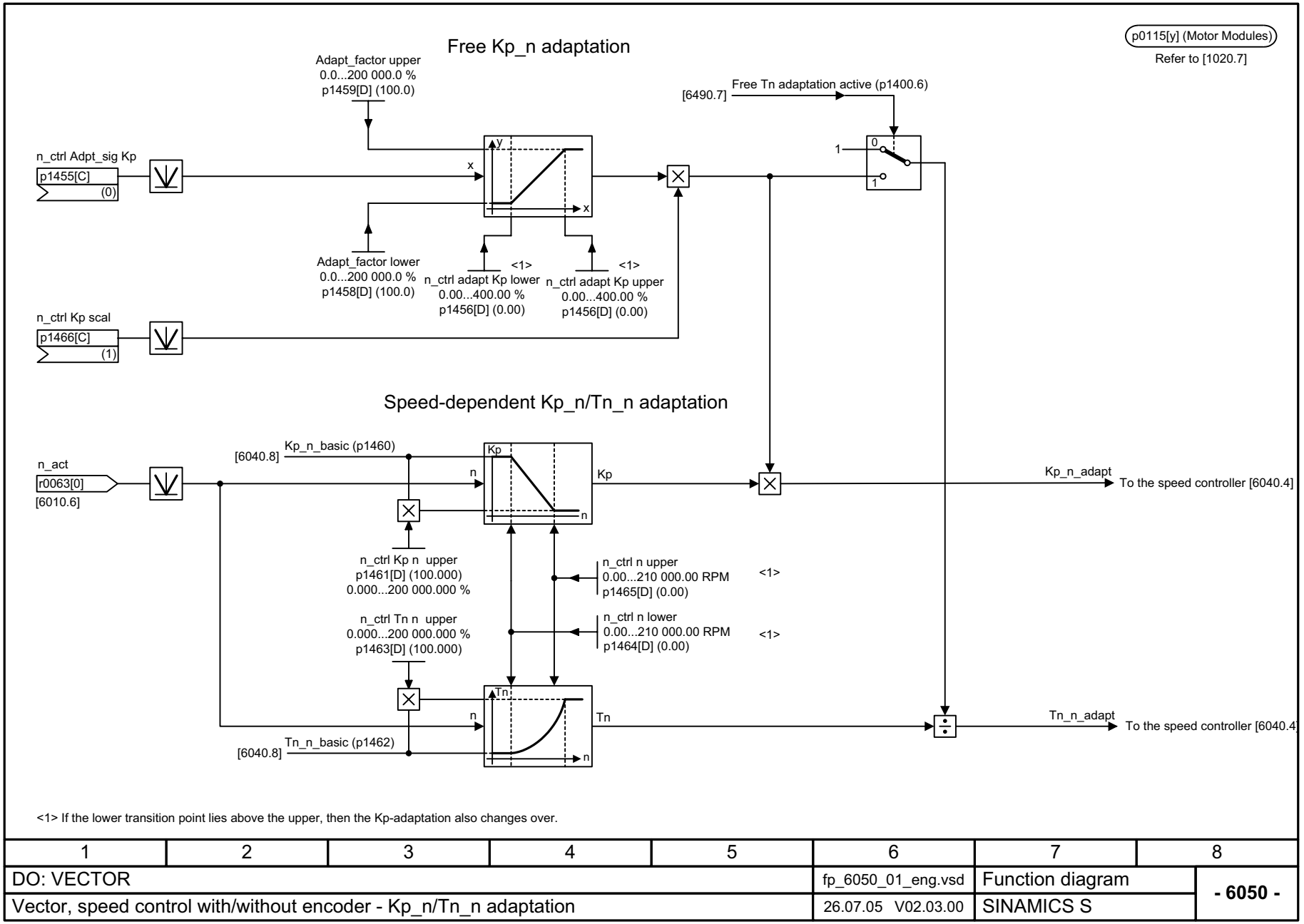

<1> If the lower transition point lies above the upper, then the Kp-adaptation also changes over.

1	2	3	4	5	6	7	8
DO: VECTOR					fp_6050_01_eng.vsd	Function diagram	- 6050 -
Vector, speed control with/without encoder - Kp_n/Tn_n adaptation					26.07.05 V02.03.00	SINAMICS S	

Figure 2-120 6050 – Kp_n-/Tn_n adaptation

© Siemens AG, 2005. All rights reserved
SINAMICS S List Manual, Edition 06.2005

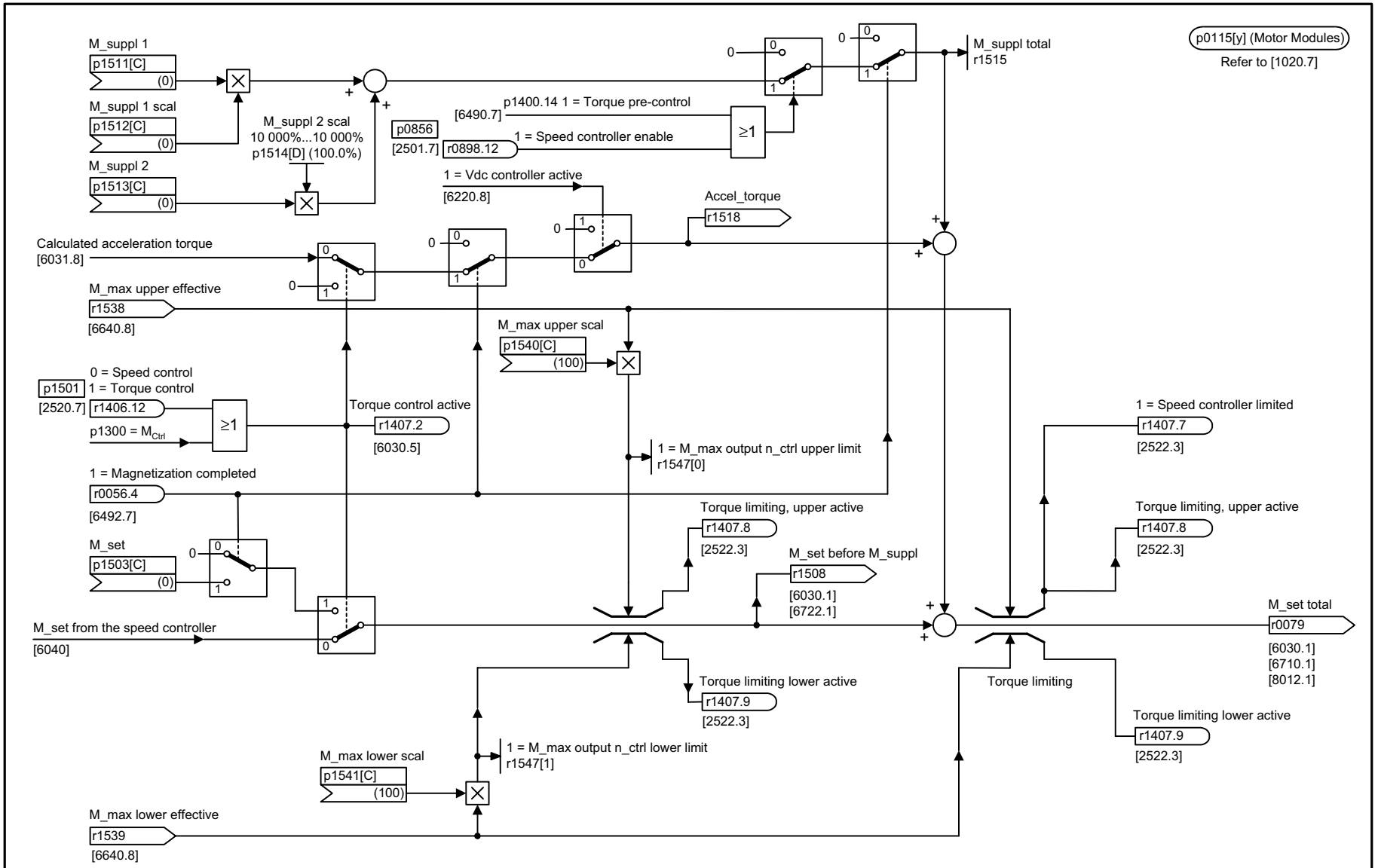

1	2	3	4	5	6	7	8
DO: VECTOR					fp_6060_01_eng.vsd	Function diagram	- 6060 -
Vector speed control with encoder - torque setpoint					26.07.05 V02.03.00	SINAMICS S	

Figure 2-121 6060 – Torque setpoint

© Siemens AG, 2005. All rights reserved
SINAMICS S List Manual, Edition 06.2005

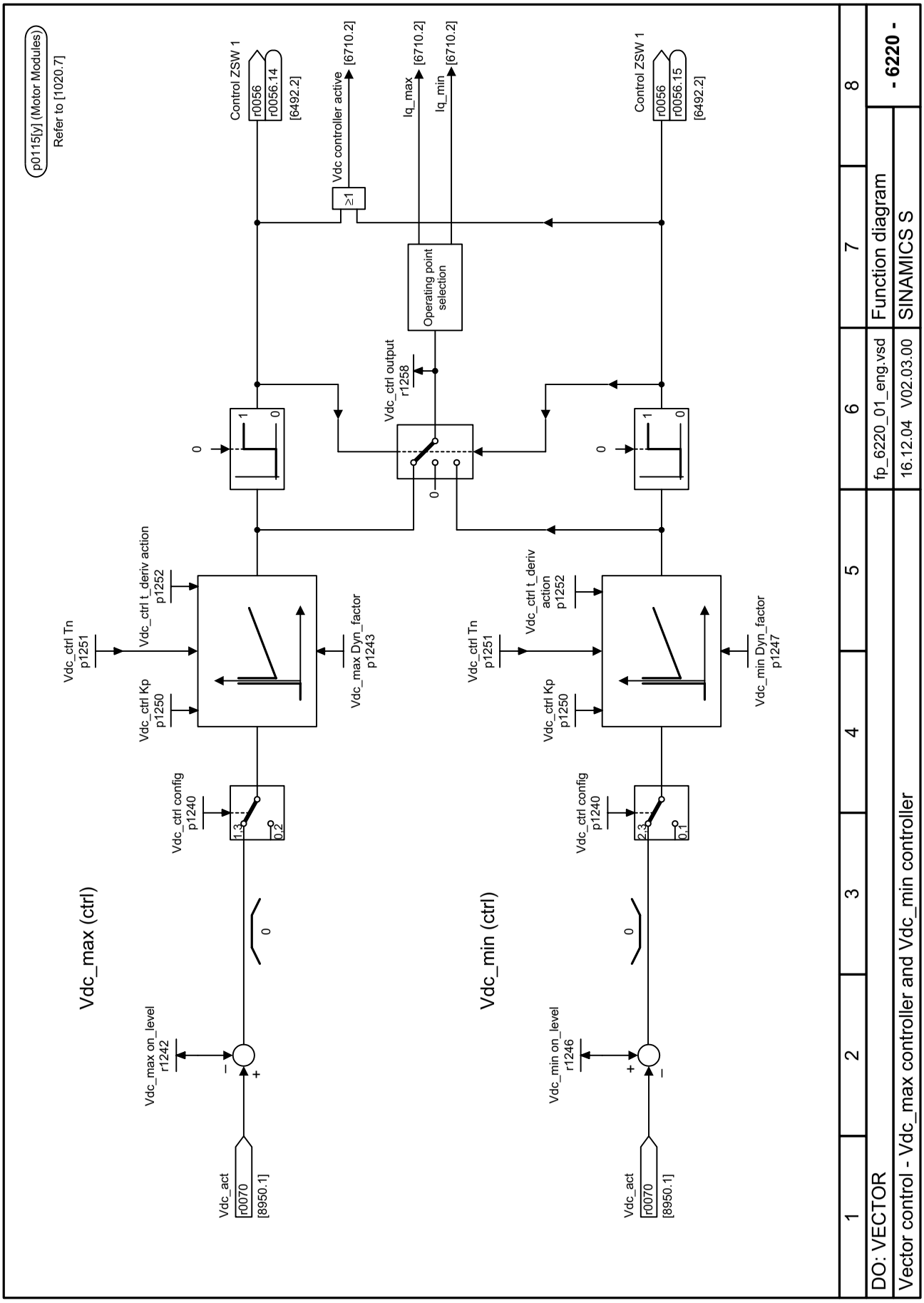

Figure 2-122 6220 – Vdc_max controller and Vdc_min controller

© Siemens AG, 2005. All rights reserved

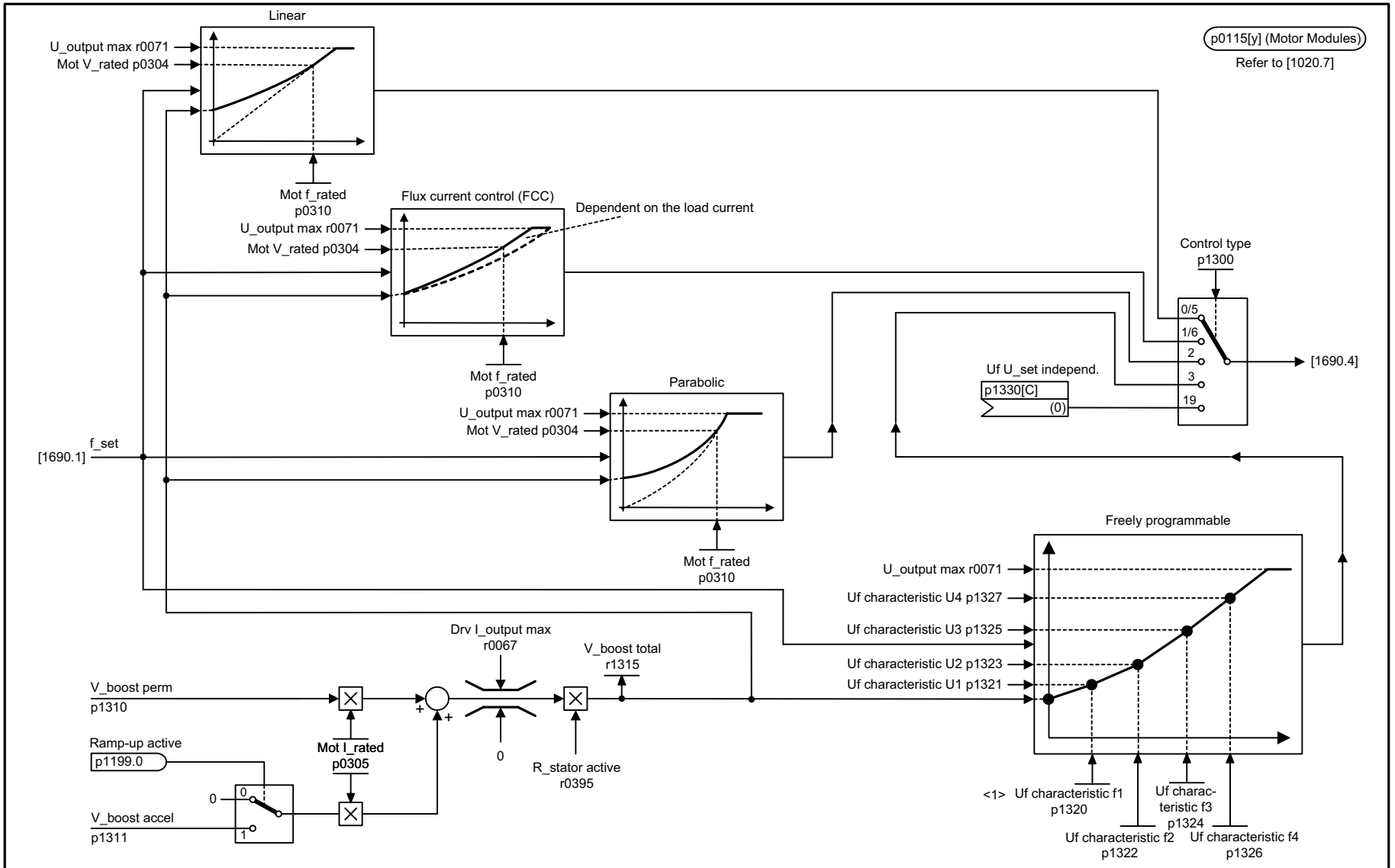

<1> For p1320 = 0, the voltage boost via p1310 is not effective.

1	2	3	4	5	6	7	8
DO: VECTOR					fp_6300_01_eng.vsd	Function diagram	- 6300 -
Vector V/f control - V/f characteristic and voltage boost					26.04.05 V02.03.00	SINAMICS S	

Figure 2-123 6300 – V/f characteristic and voltage boost

© Siemens AG, 2005. All rights reserved
SINAMICS S List Manual, Edition 06.2005

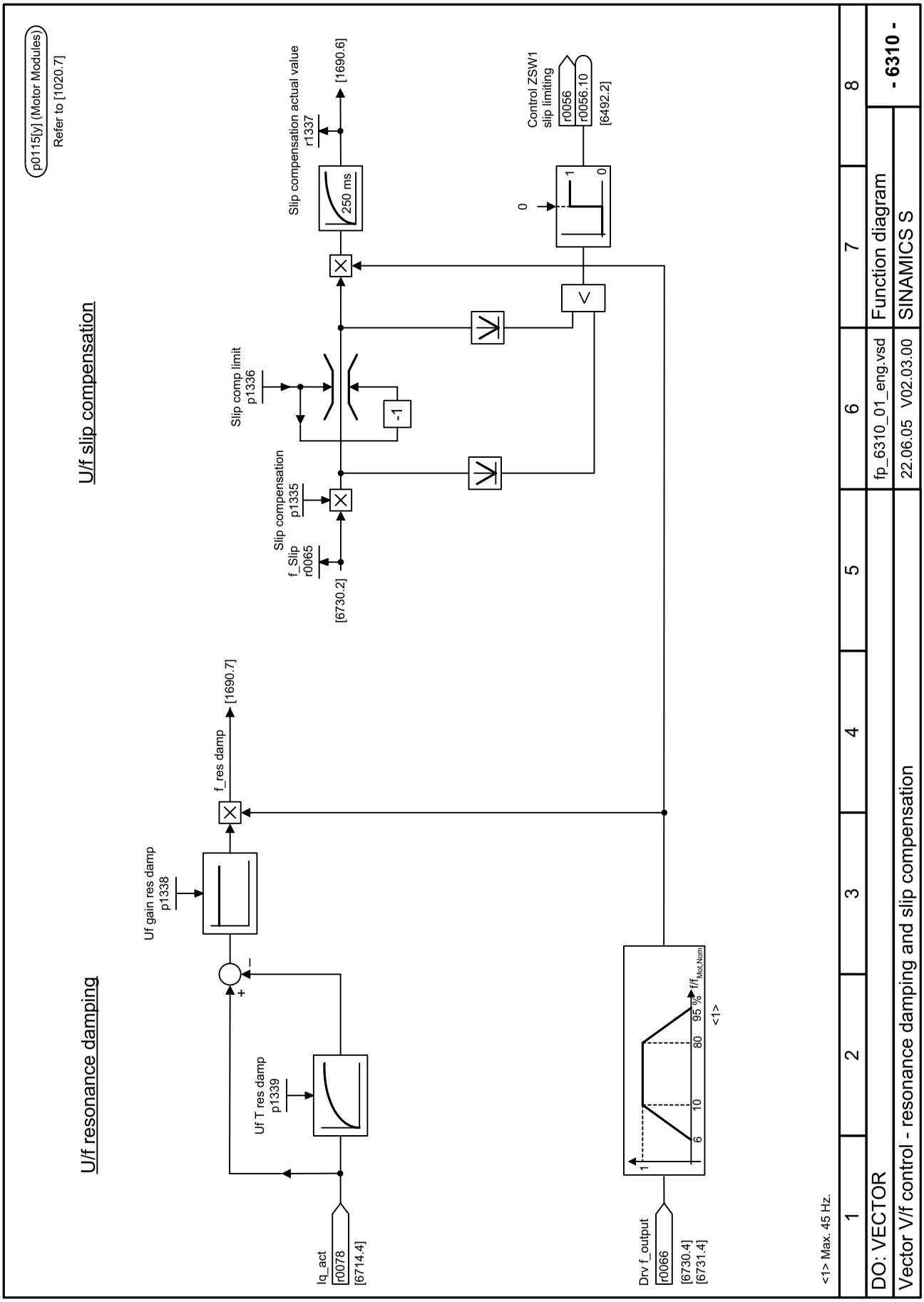

Figure 2-124 6310 – Resonance damping and slip compensation

© Siemens AG, 2005. All rights reserved

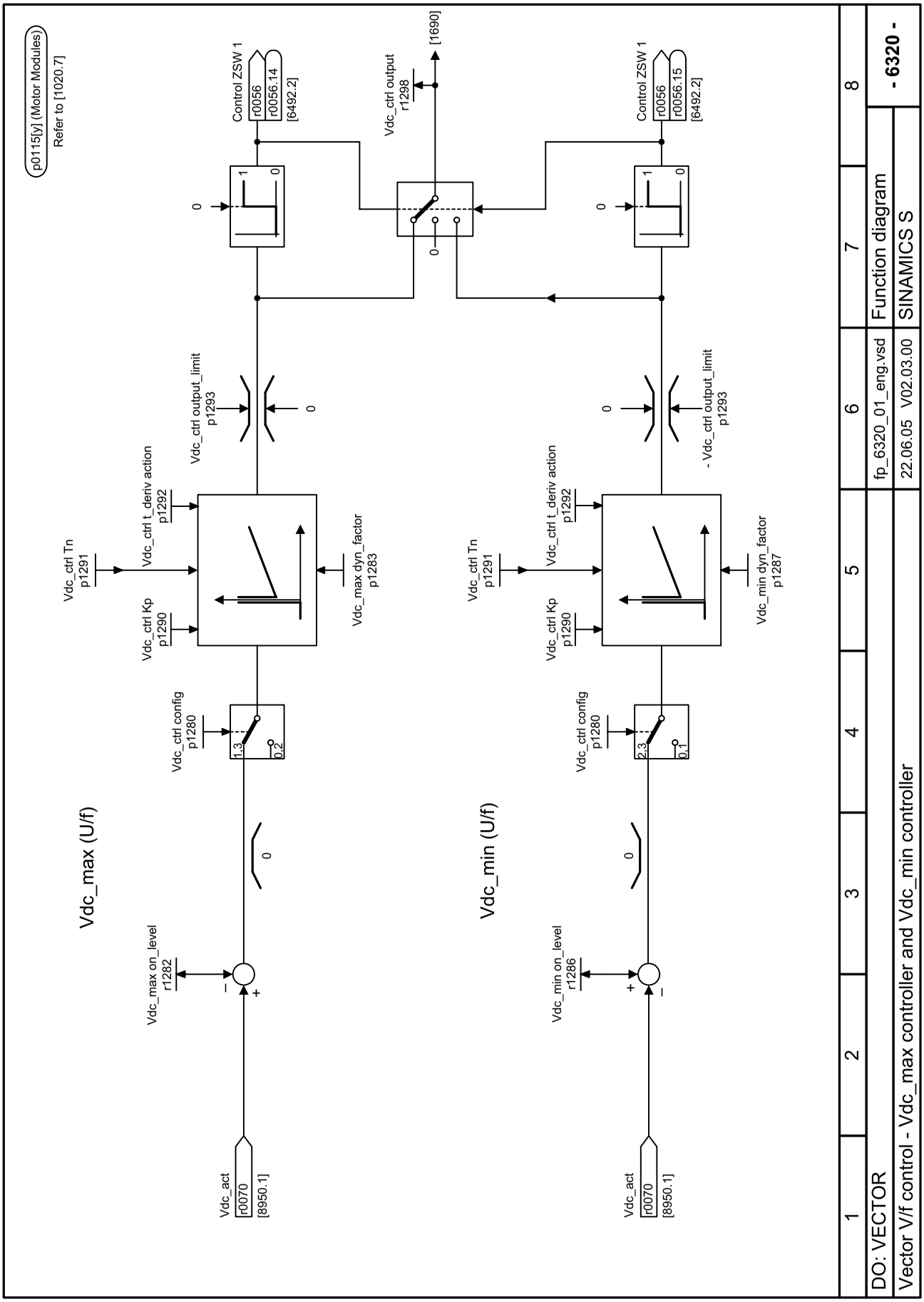

Figure 2-125 6320 – Vdc_max controller and Vdc_min controller

© Siemens AG, 2005. All rights reserved
SINAMICS S List Manual, Edition 06.2005

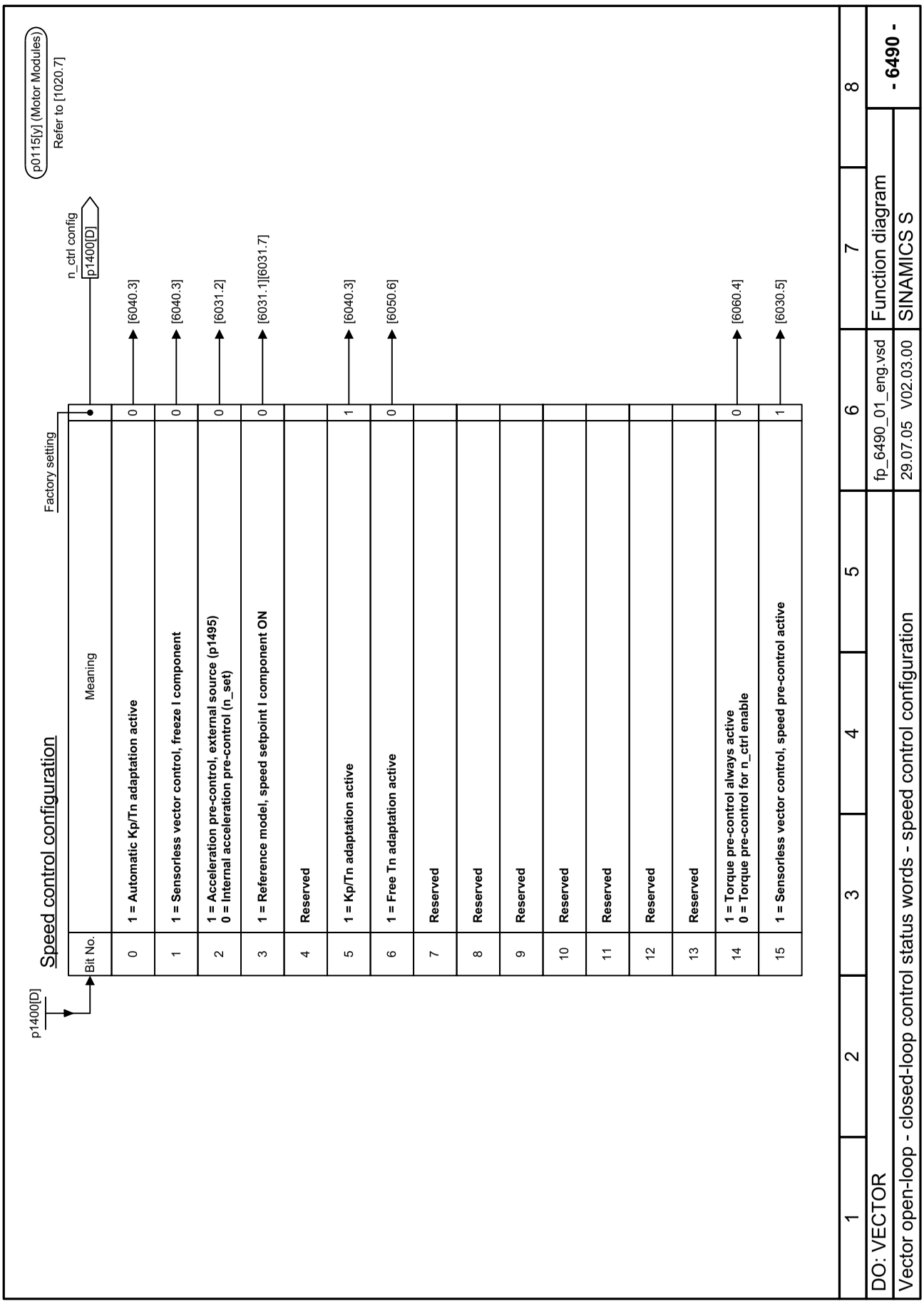

Figure 2-126 6490 – Speed control configuration

© Siemens AG, 2005. All rights reserved

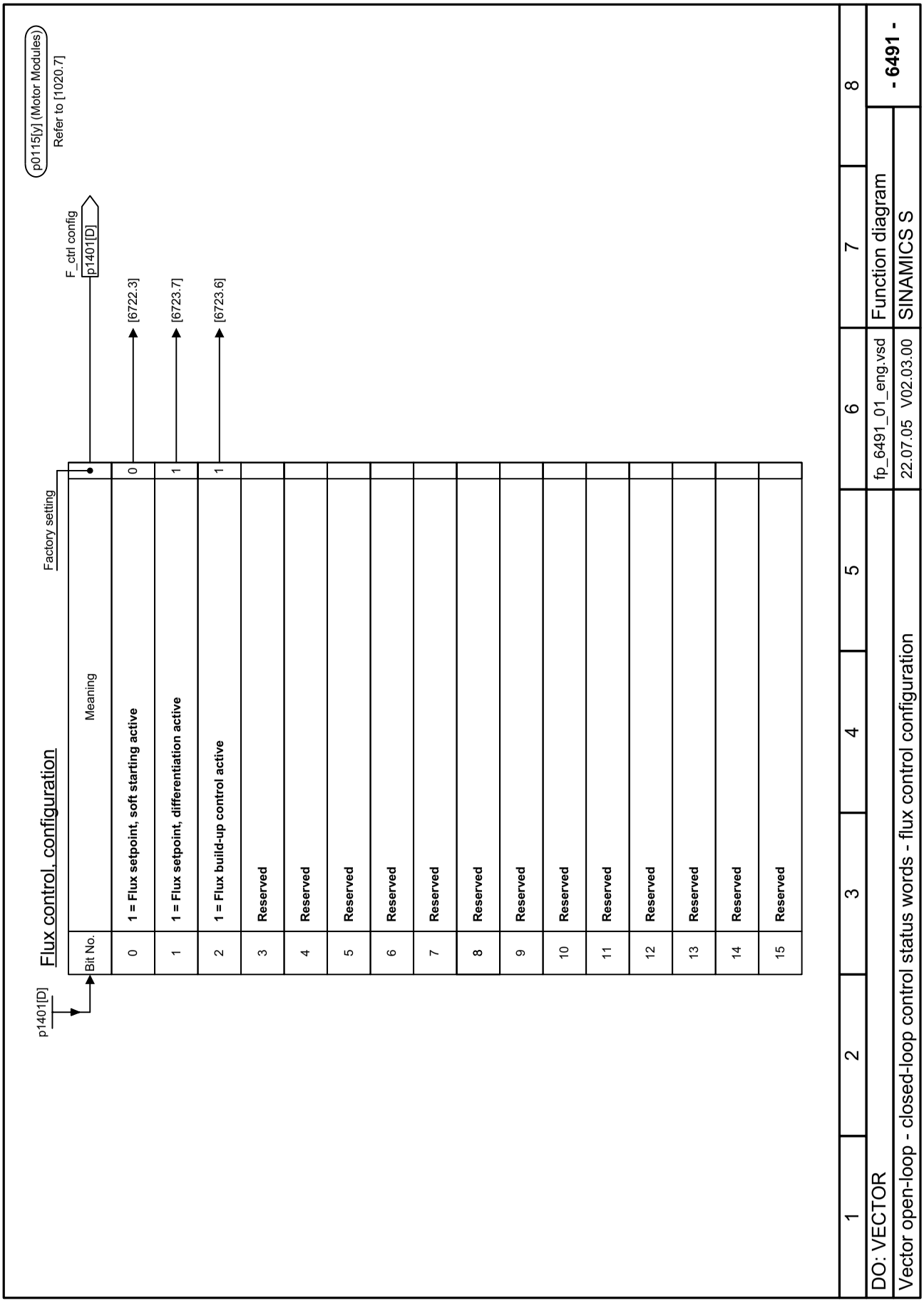

Figure 2-127 6491 – Flux control configuration

© Siemens AG, 2005. All rights reserved
SINAMICS S List Manual, Edition 06.2005

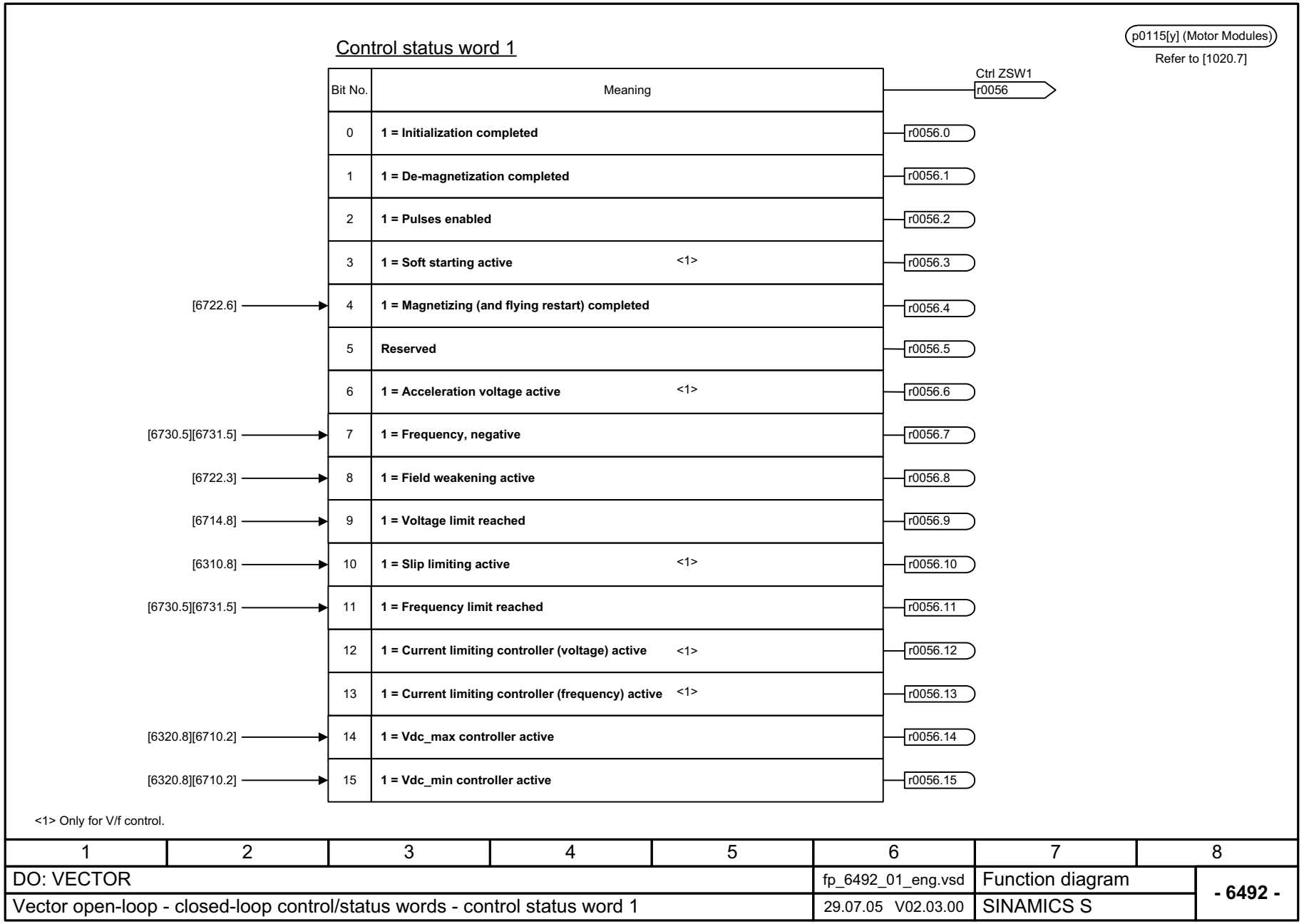

Figure 2-128 6492 – Closed-loop control status word 1

© Siemens AG, 2005. All rights reserved
SINAMICS S List Manual, Edition 06.2005

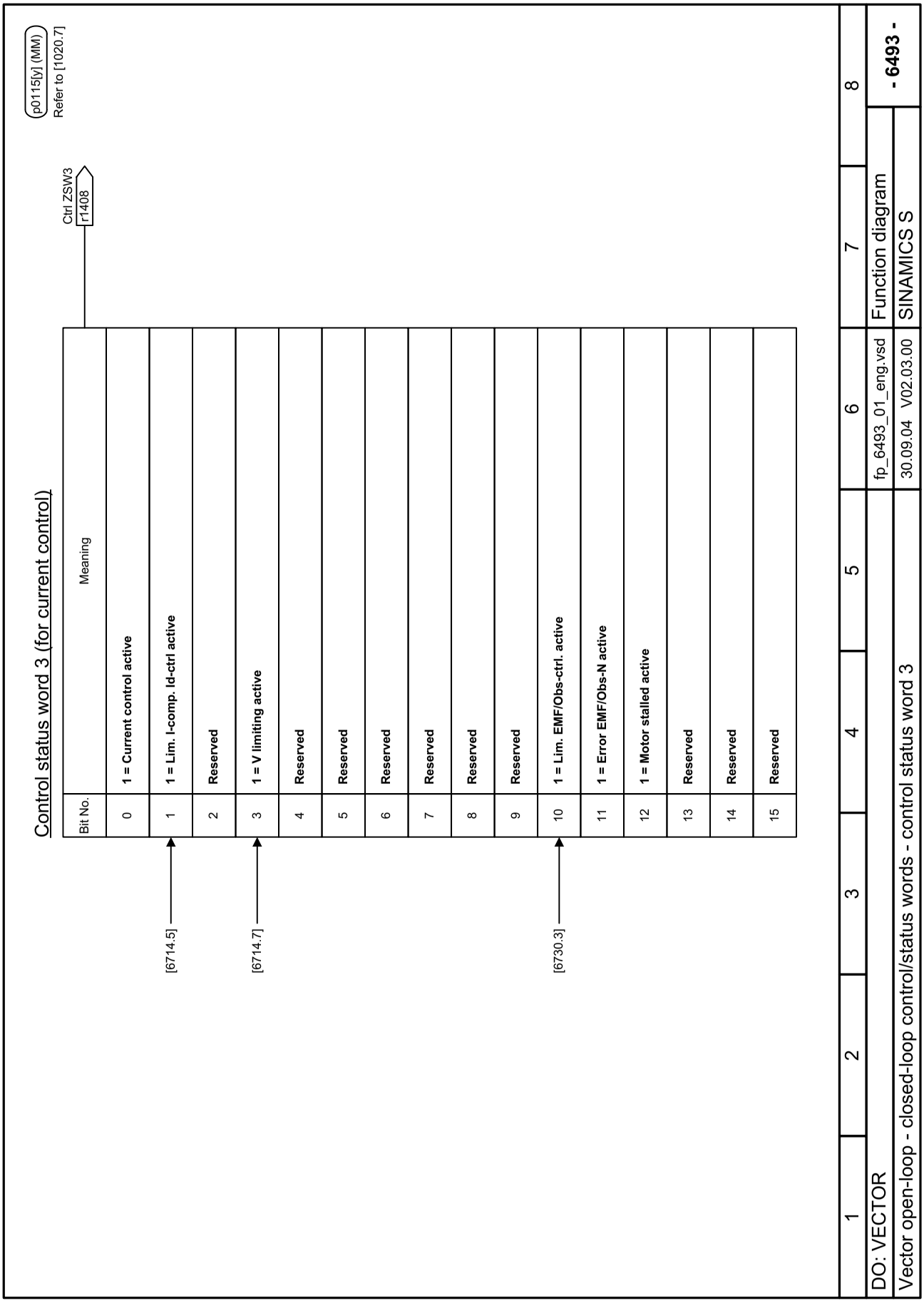

Figure 2-129 6493 – Closed-loop control status word 3

© Siemens AG, 2005. All rights reserved
SINAMICS S List Manual, Edition 06.2005

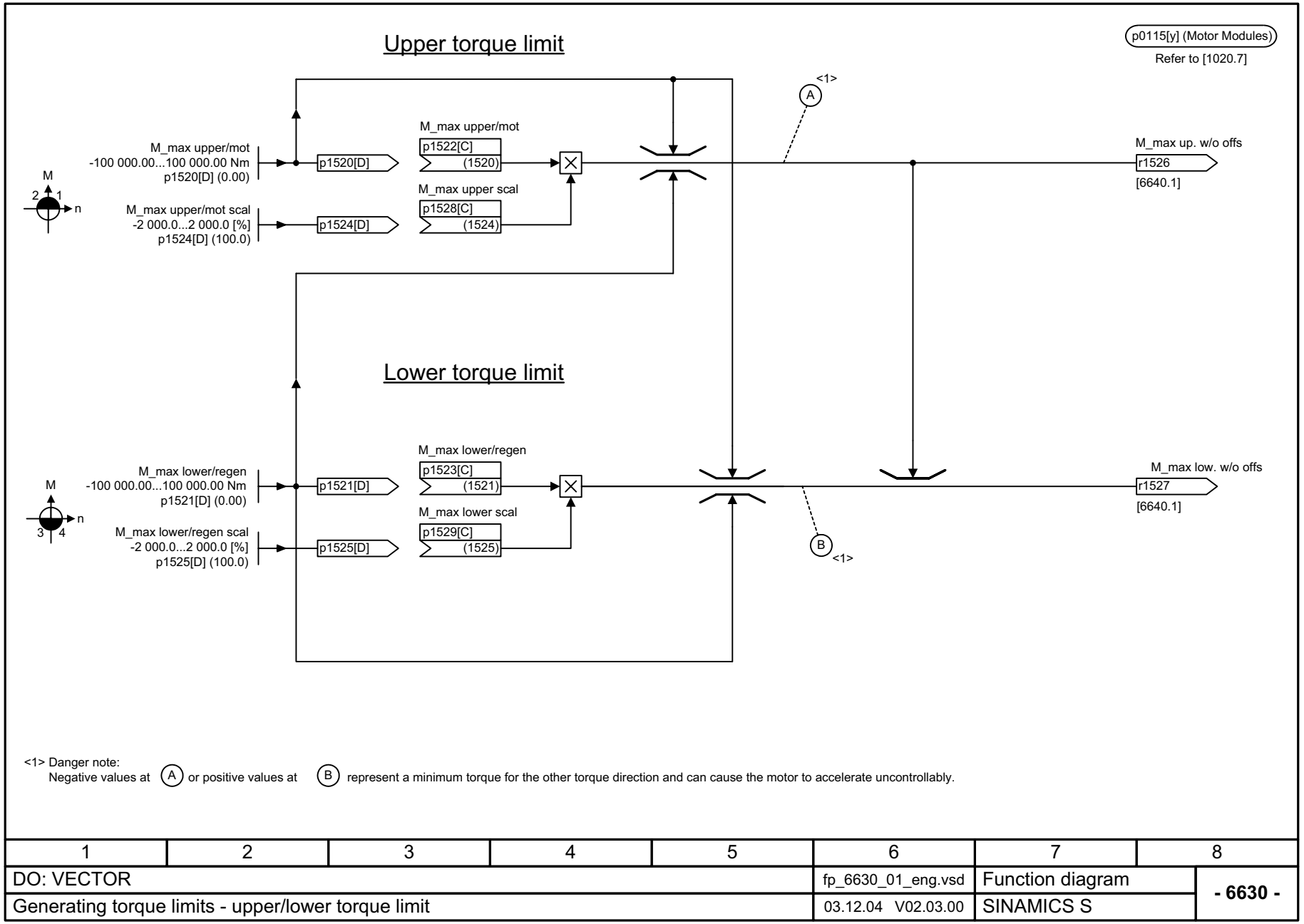

1	2	3	4	5	6	7	8
DO: VECTOR					fp_6630_01_eng.vsd	Function diagram	- 6630 -
Generating torque limits - upper/lower torque limit					03.12.04 V02.03.00	SINAMICS S	

Figure 2-130 6630 – Upper/lower torque limit

© Siemens AG, 2005. All rights reserved
SINAMICS S List Manual, Edition 06.2005

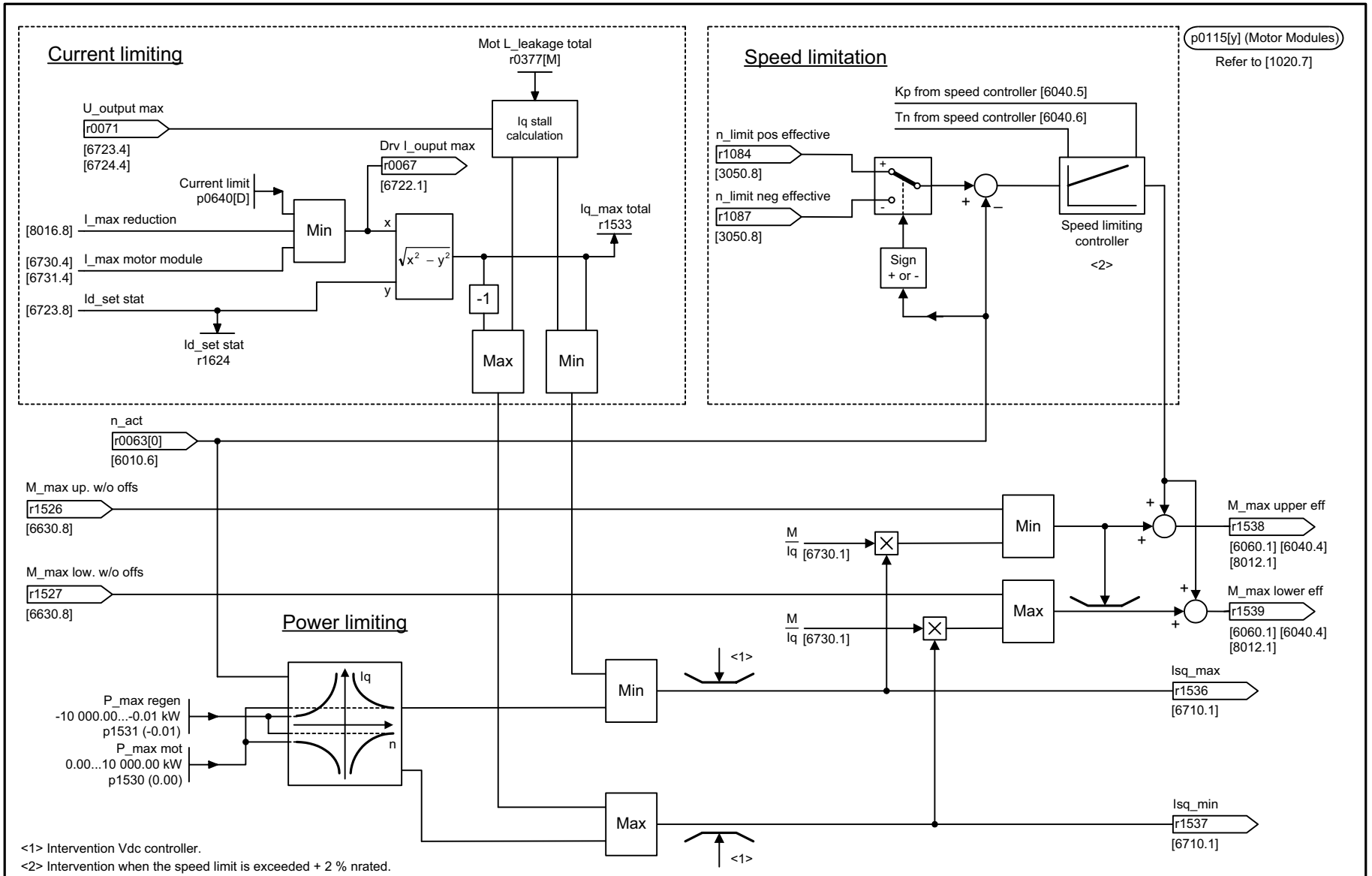

1	2	3	4	5	6	7	8
DO: VECTOR					fp_6640_01_eng.vsd	Function diagram	- 6640 -
Generating torque limits - current/power/torque limits					14.07.05 V02.03.00	SINAMICS S	

Figure 2-131 6640 – Current/power/torque limits

© Siemens AG, 2005. All rights reserved
SINAMICS S List Manual, Edition 06.2005

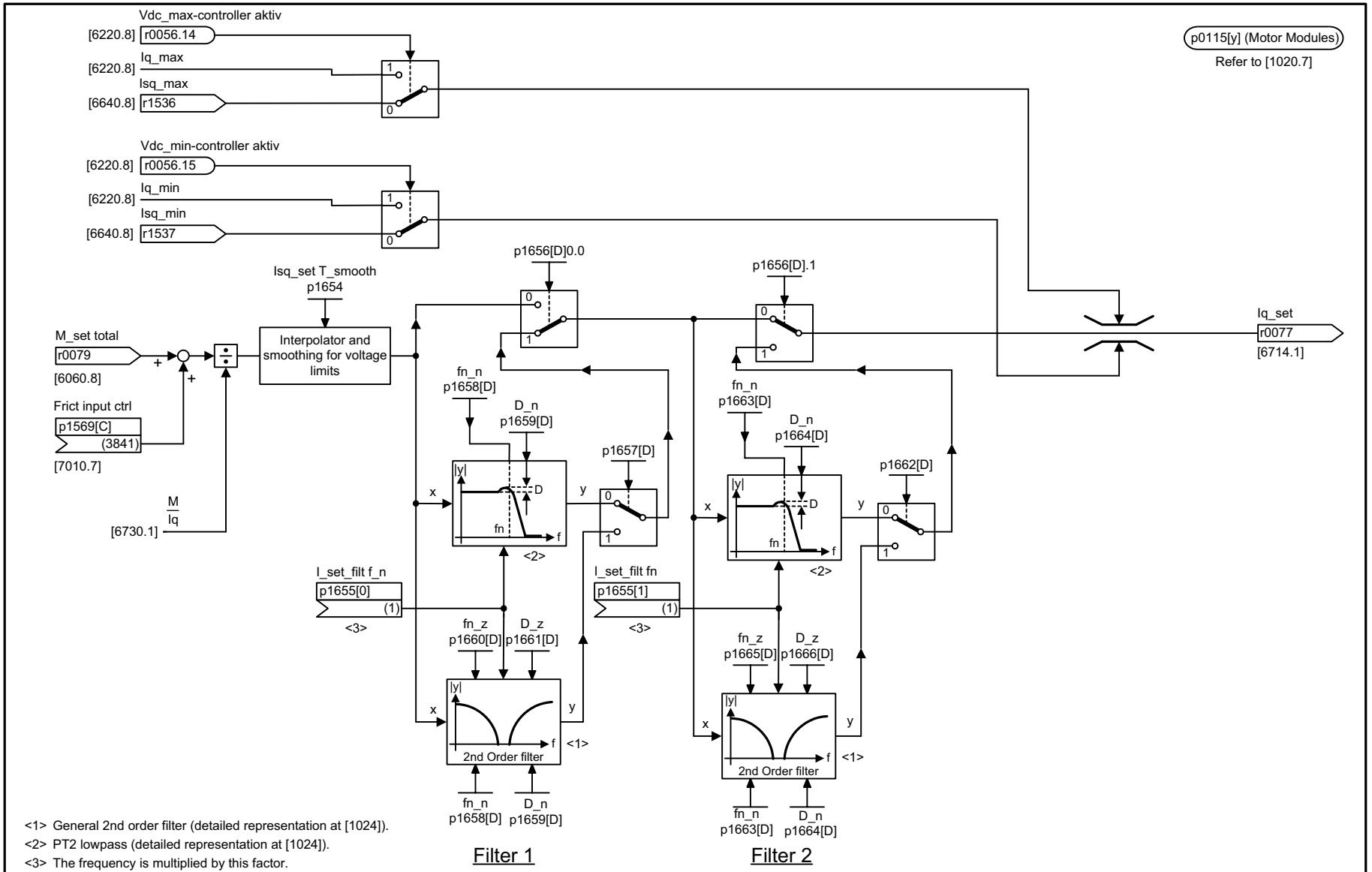

Figure 2-132 6710 – Current setpoint filter

<1> General 2nd order filter (detailed representation at [1024]).
<2> PT2 lowpass (detailed representation at [1024]).
<3> The frequency is multiplied by this factor.

1	2	3	4	5	6	7	8
DO: VECTOR					fp_6710_01_eng.vsd	Function diagram	- 6710 -
Vector current control - current setpoint filter					17.06.05 V02.03.00	SINAMICS S	

© Siemens AG, 2005. All rights reserved
SINAMICS S List Manual, Edition 06.2005

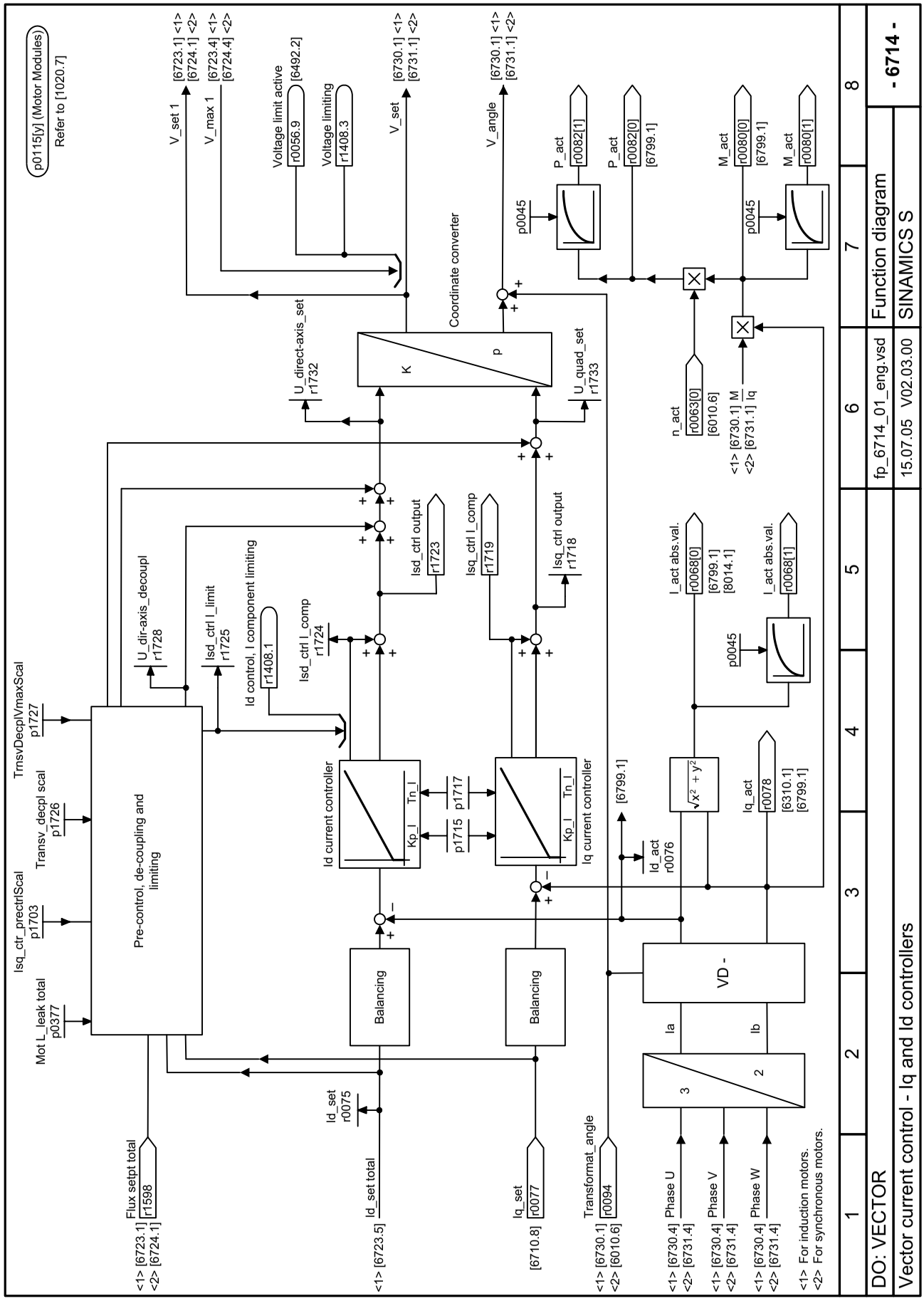

Figure 2-133 6714 – Iq and Id controller

© Siemens AG, 2005. All rights reserved
SINAMICS S List Manual, Edition 06.2005

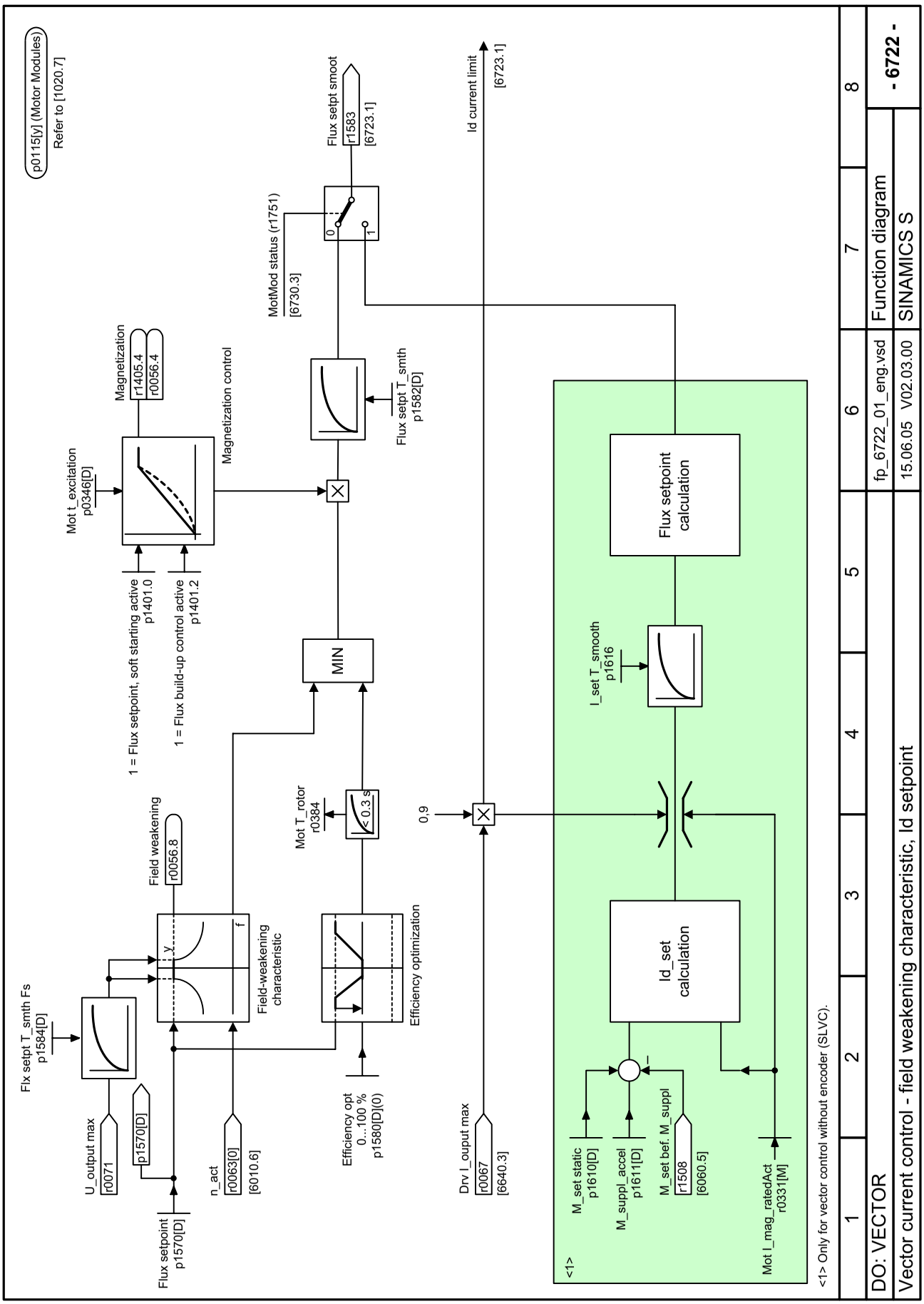

Figure 2-134 6722 – Field weakening characteristic, Id setpoint

© Siemens AG, 2005. All rights reserved

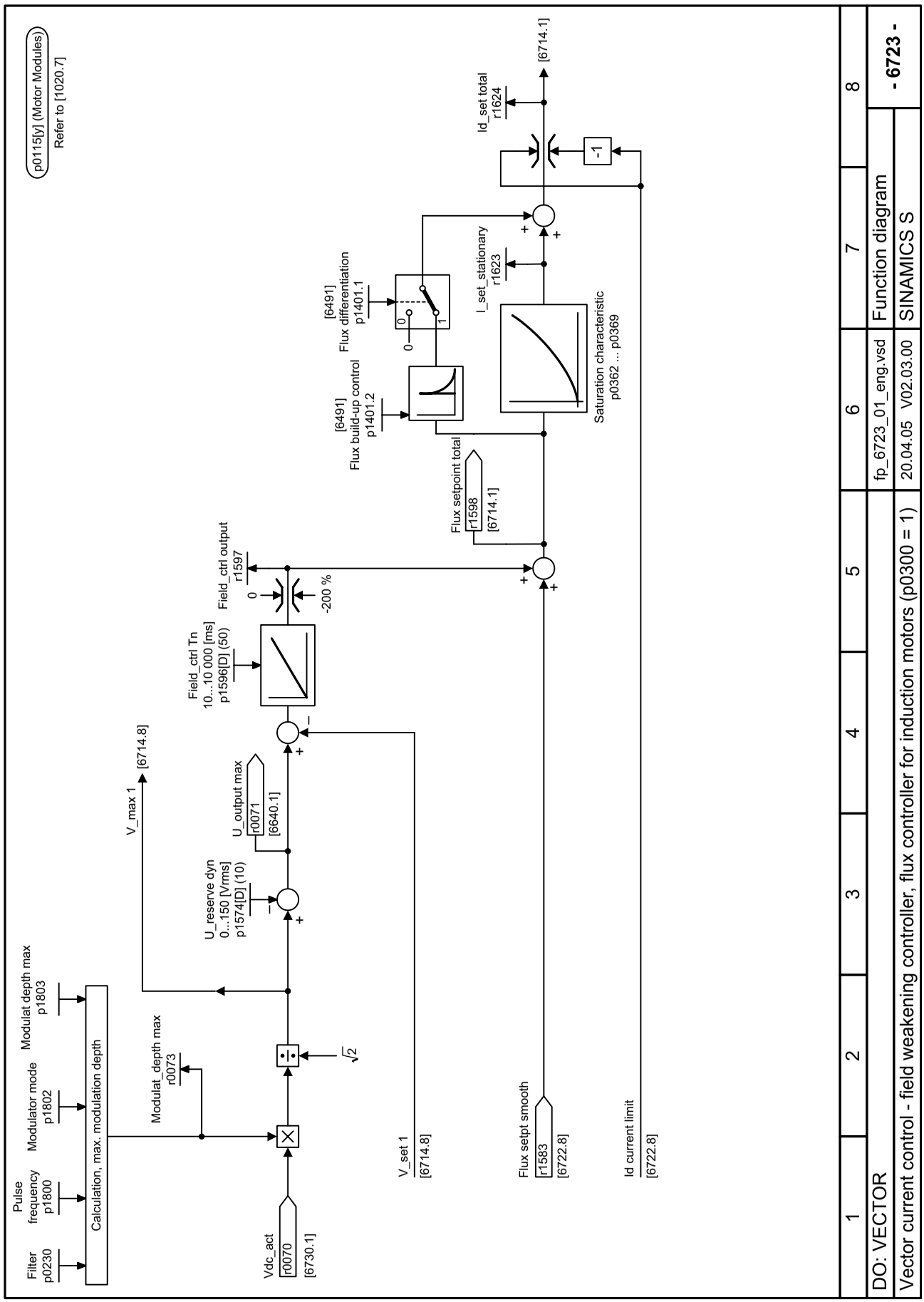

Figure 2-135 6723 – Field weakening controller, flux controller for induction motor (p0300 = 1)

© Siemens AG, 2005. All rights reserved

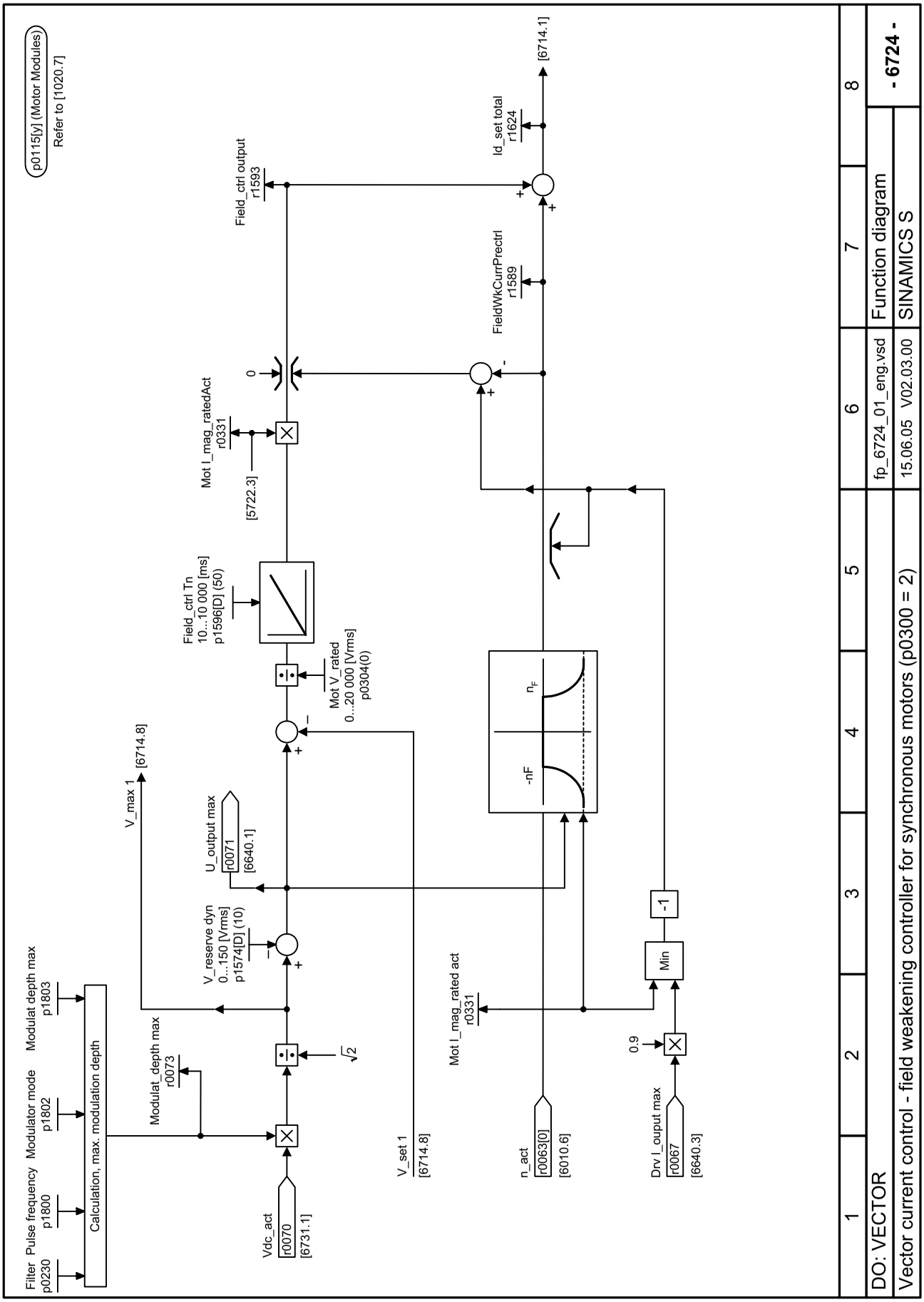

Figure 2-136 6724 – Field weakening controller for synchronous motor (p0300 = 2)

© Siemens AG, 2005. All rights reserved

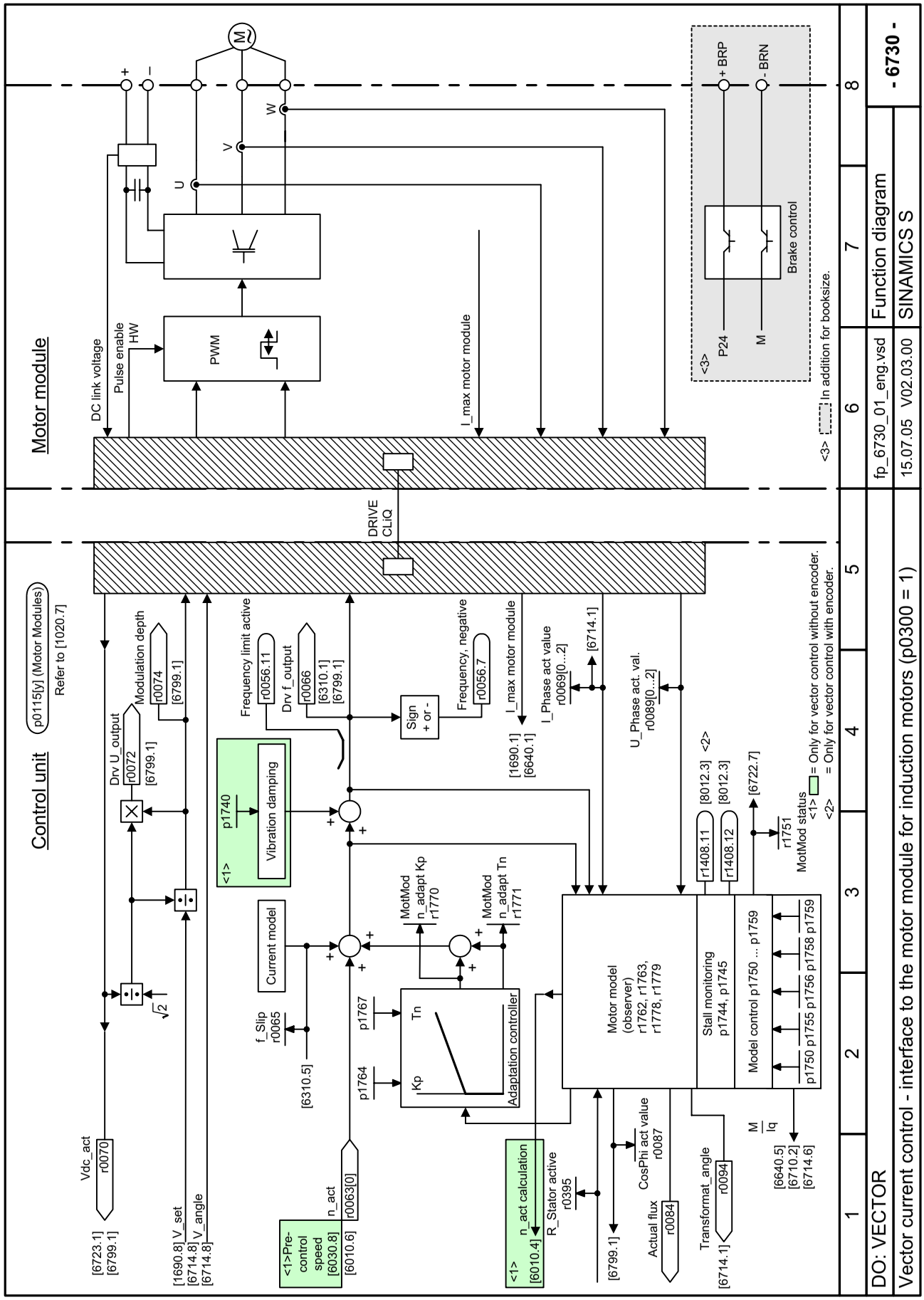

Figure 2-137 6730 – Interface to Motor Module for induction motor (p0300 = 1)

© Siemens AG, 2005. All rights reserved

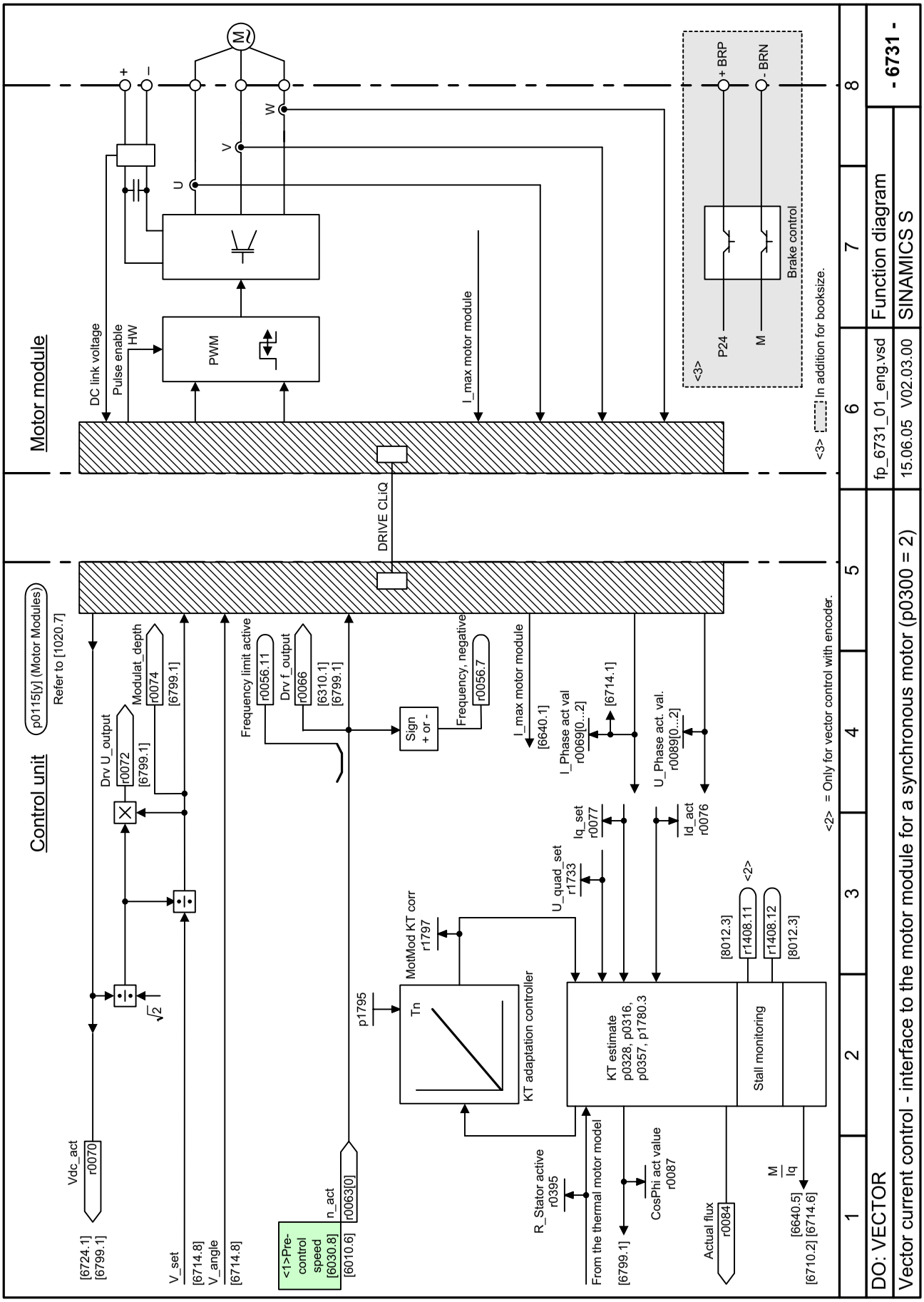

Figure 2-138 6731 – Interface to Motor Module for synchronous motor (p0300 = 2)

© Siemens AG, 2005. All rights reserved

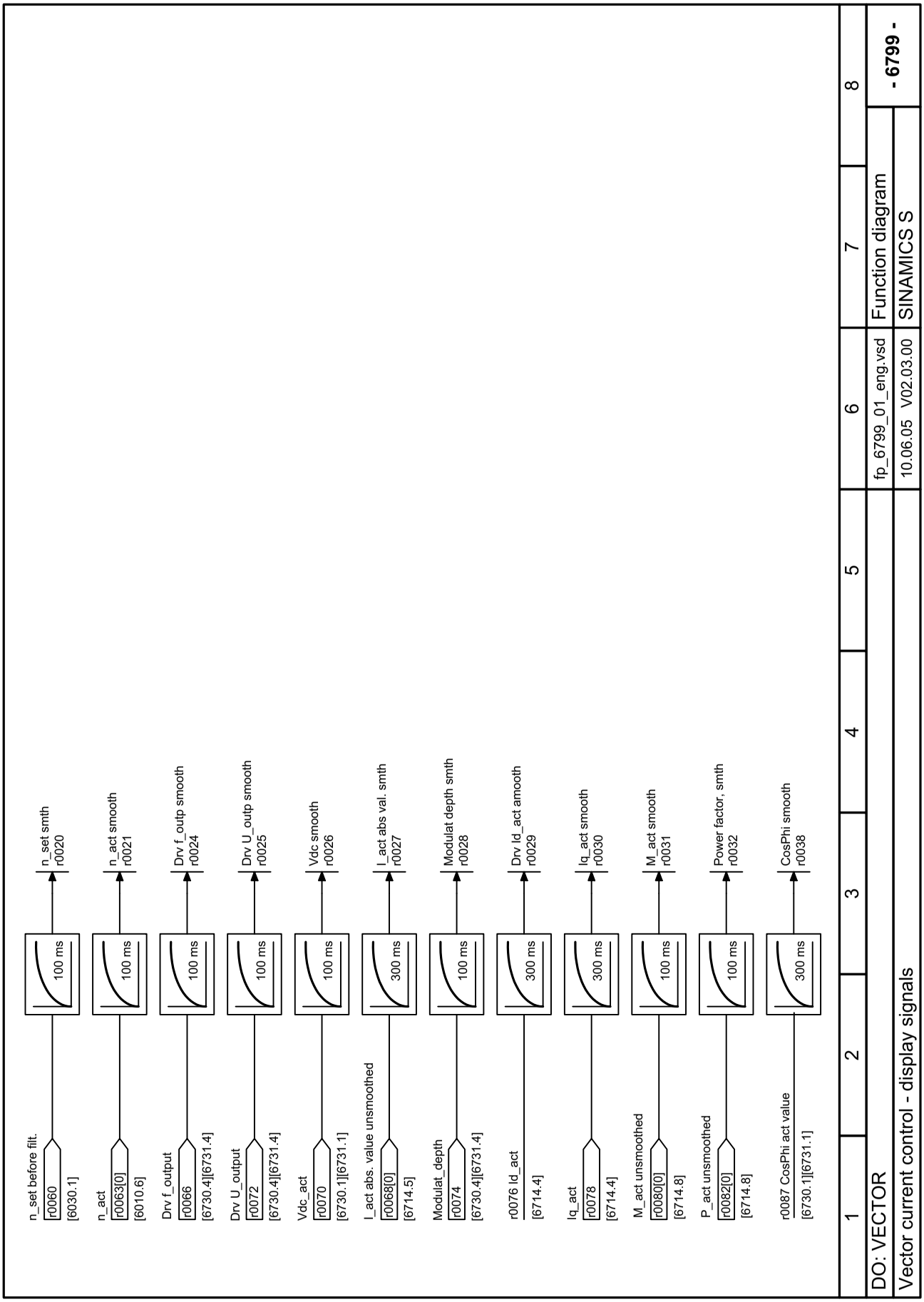

Figure 2-139 6799 – Display signals

© Siemens AG, 2005. All rights reserved
SINAMICS S List Manual, Edition 06.2005

2.15 Technology functions

Function diagrams

7010 – Friction characteristic curve 2-872

© Siemens AG, 2005. All rights reserved

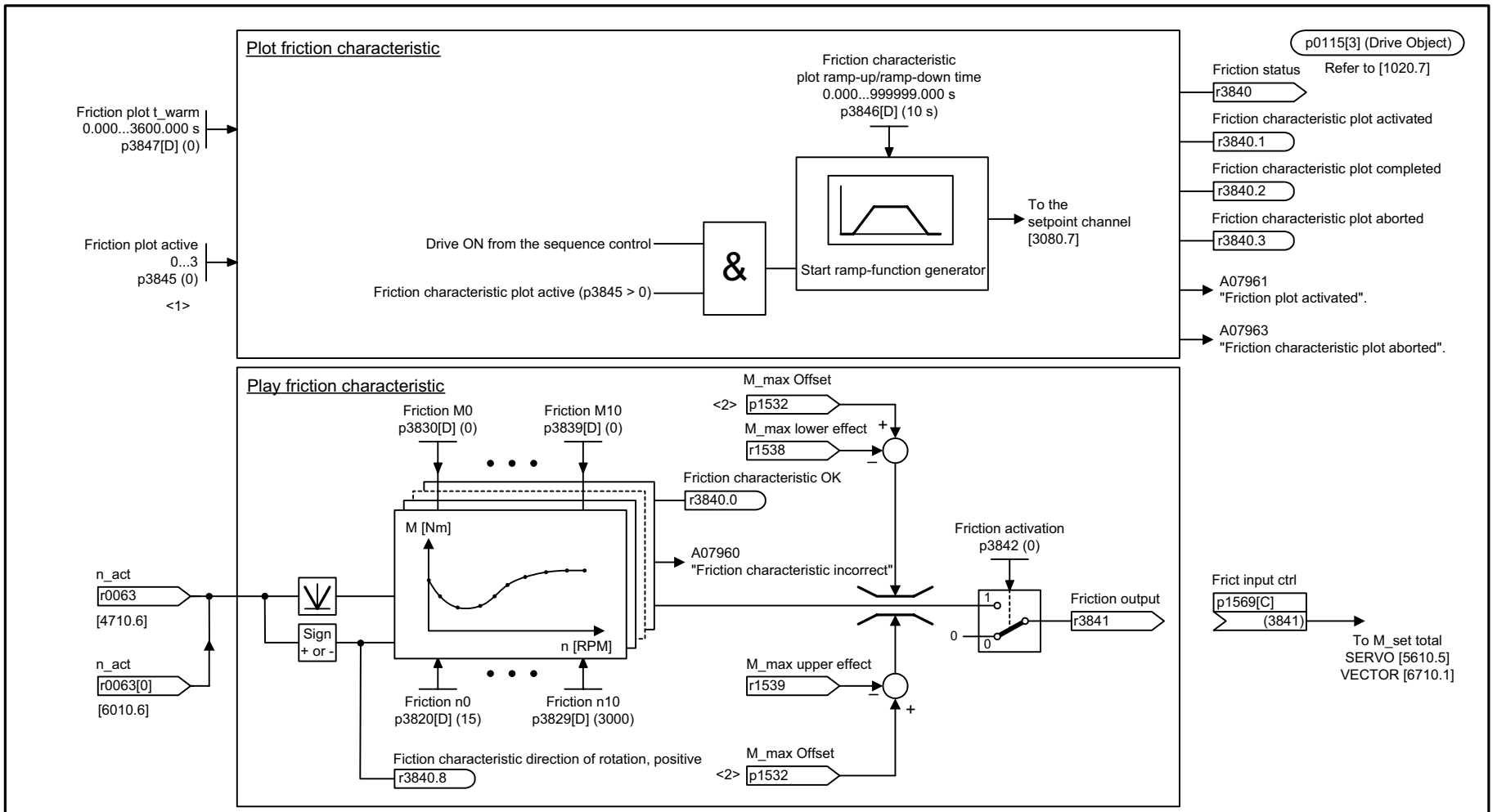

<1> p3845
= 0: Plot de-activated
= 1: Plot activated directions of rotation, all
= 2: Plot activated direction of rotation, positive
= 3: Plot activated, direction of rotation, negative
The following applies for Vector:
The function module "speed/torque control (n/M)" (r0108.2 = 1) is required for the friction characteristic.

<2> Only for SERVO. p1532 = 0 for VECTOR

1	2	3	4	5	6	7	8
DO: SERVO, VECTOR					fp_7010_01_eng.vsd	Function diagram	- 7010 -
Technology functions - friction characteristic					15.06.05 V02.03.00	SINAMICS S	

Figure 2-140 7010 – Friction characteristic curve

© Siemens AG, 2005. All rights reserved
SINAMICS S List Manual, Edition 06.2005

2.16 Technology controller

Function diagrams

7950 – Fixed values (r0108.16 = 1)	2-874
7954 – Motorized potentiometer (r0108.16 = 1)	2-875
7958 – Closed-loop control (r0108.16 = 1)	2-876

© Siemens AG, 2005. All rights reserved

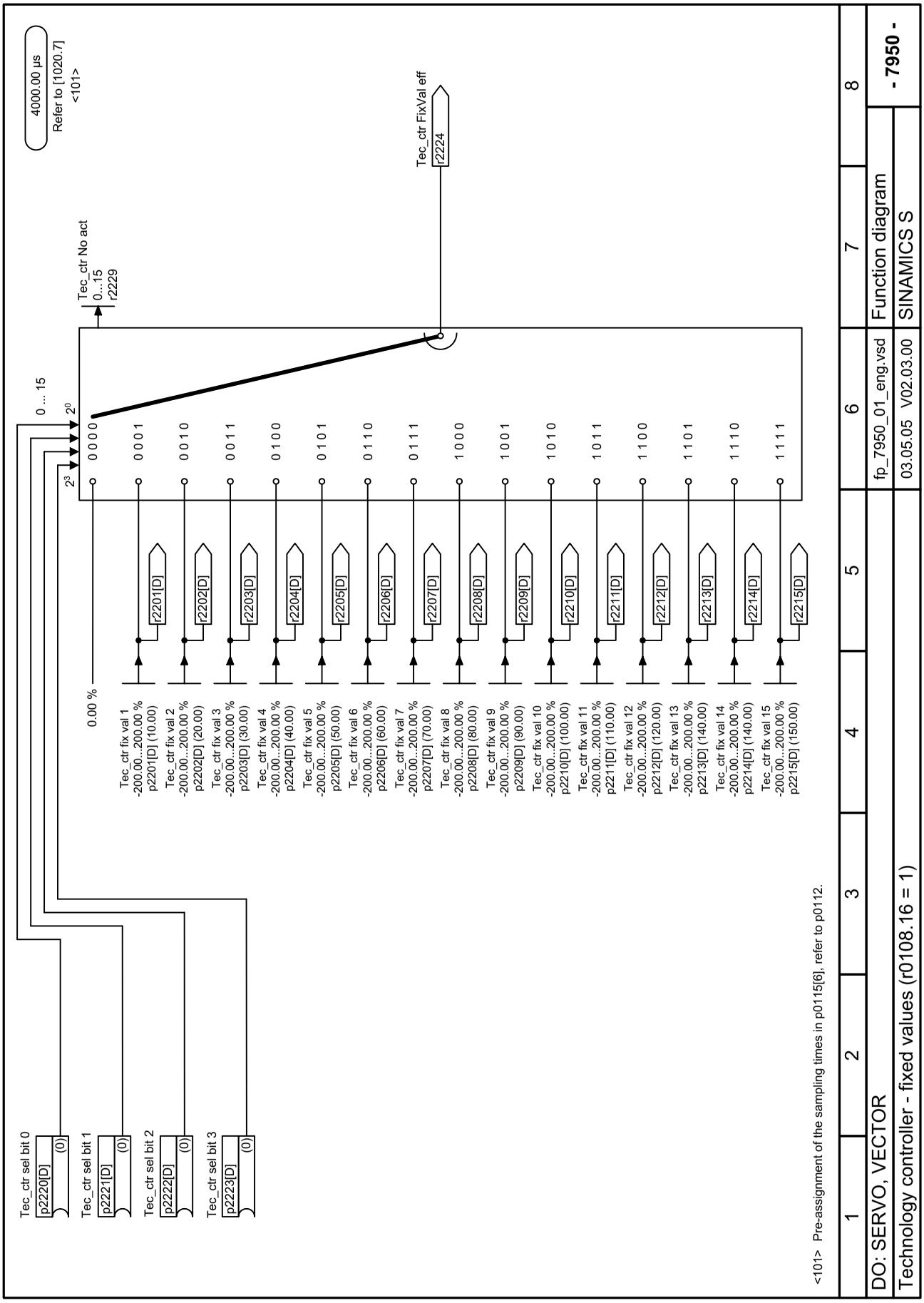

Figure 2-141 7950 – Fixed values (r0108.16 = 1)

© Siemens AG, 2005. All rights reserved

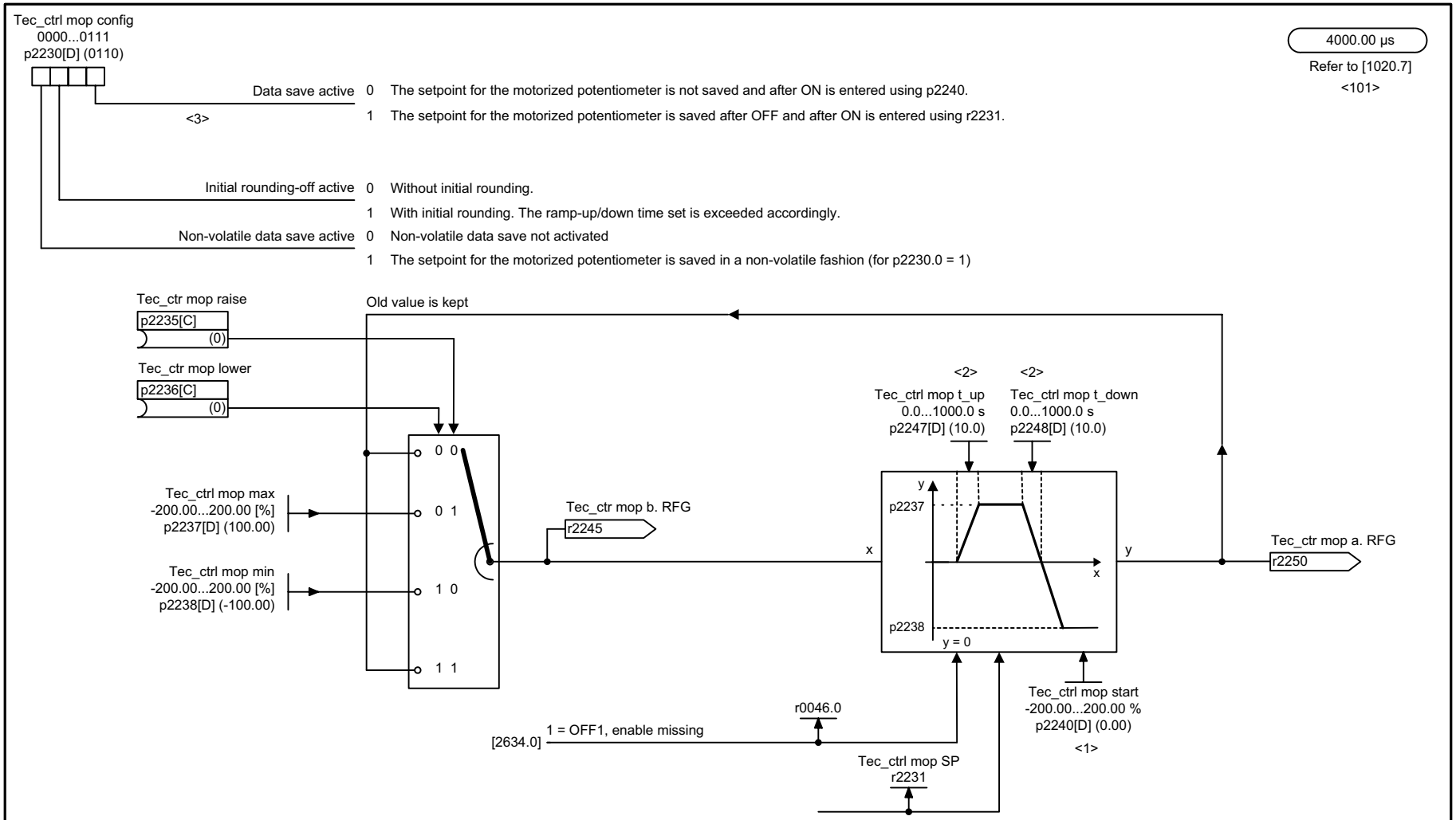

<1> For p2230.0 = 0, this setpoint is entered after ON.
<2> If the initial rounding-off is active (p2230.2 = 1), the selected ramp-up and ramp-down times are appropriately exceeded.
<3> The following prerequisites must be fulfilled in order to be able to save the setpoint in a non-volatile fashion:
- Firmware with V2.3 or higher.
- control unit 320 (CU320) with hardware version C or higher (module with NVRAM).
<101> Pre-assignment of the sampling times in p0115, refer to p0112.

1	2	3	4	5	6	7	8
DO: SERVO, VECTOR					fp_7954_01_eng.vsd	Function diagram	- 7954 -
Technology controller - motorized potentiometer (r0108.16 = 1)					06.07.05 V02.03.00	SINAMICS S	

Figure 2-142 7954 – Motorized potentiometer (r0108.16 = 1)

© Siemens AG, 2005. All rights reserved
SINAMICS S List Manual, Edition 06.2005

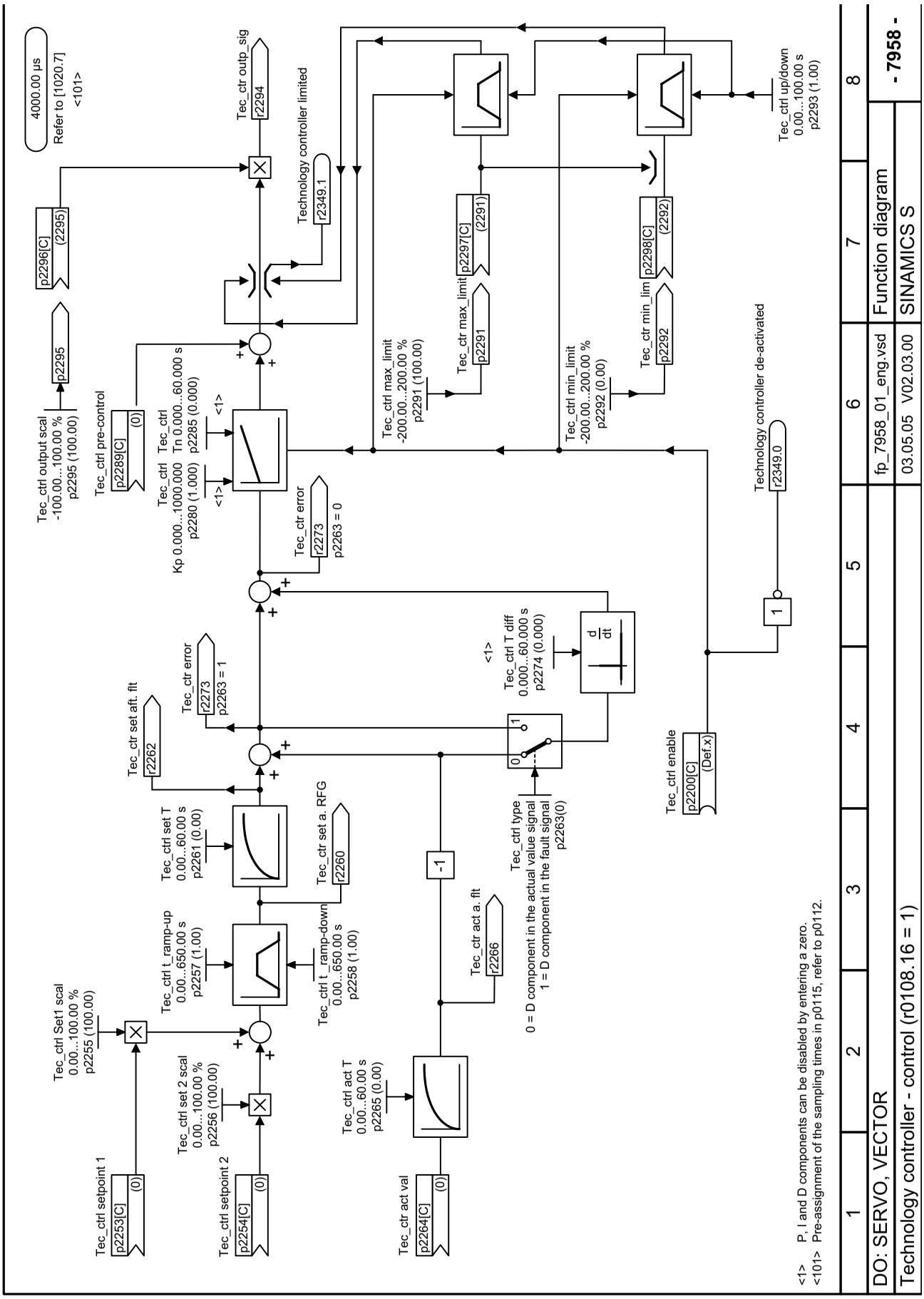

Figure 2-143 7958 – Closed-loop control (r0108.16 = 1)

© Siemens AG, 2005. All rights reserved

2.17 Messages and monitoring functions

Function diagrams

8010 – Speed messages	2-878
8012 – Torque messages, motor blocked/stalled	2-879
8013 – Load monitoring (r0108.17 = 1)	2-880
8014 – Thermal monitoring power section	2-881
8016 – Thermal monitoring motor	2-882

© Siemens AG, 2005. All rights reserved

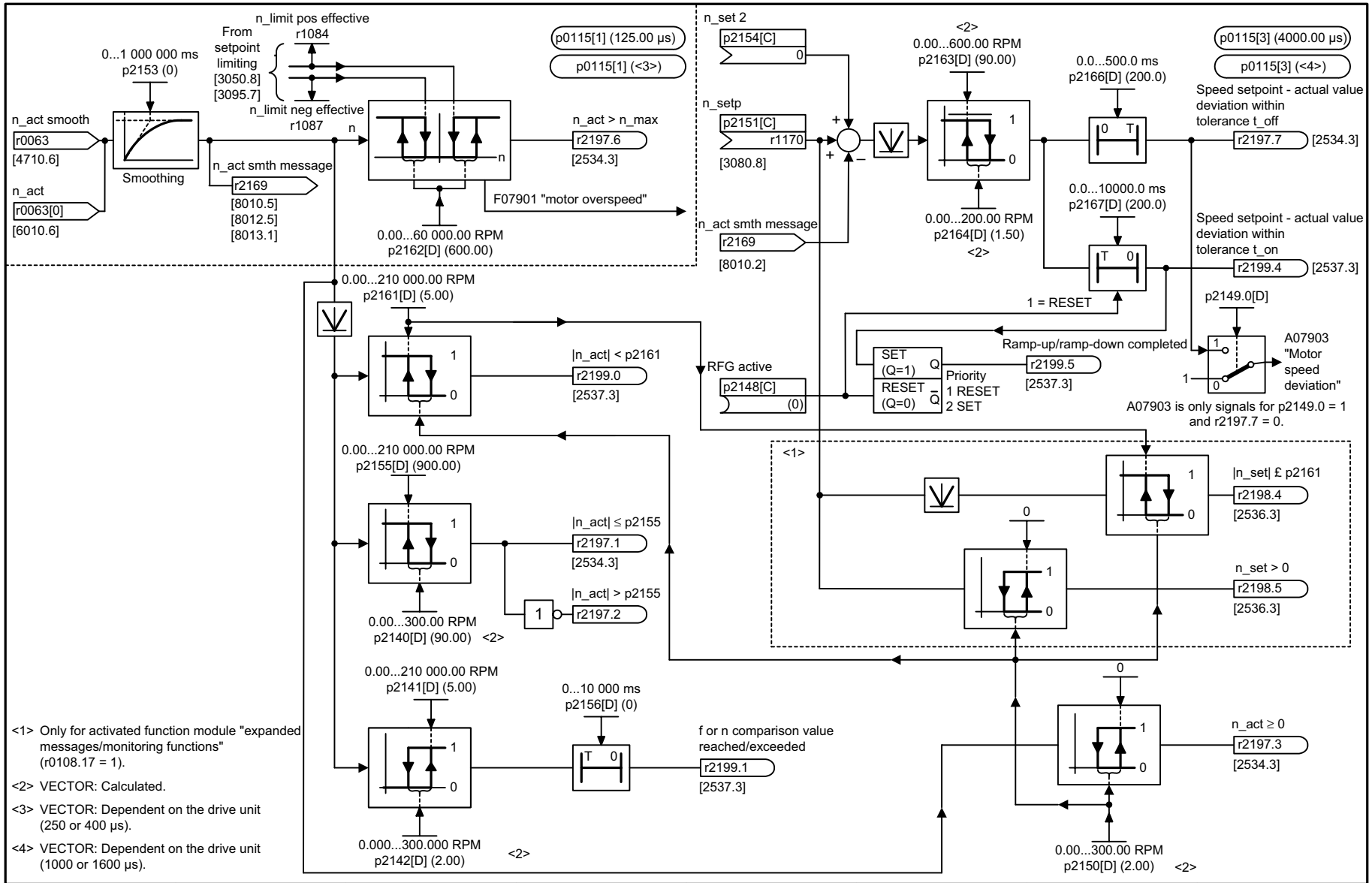

1	2	3	4	5	6	7	8
DO: SERVO, VECTOR					fp_8010_01_eng.vsd	Function diagram	- 8010 -
Messages and monitoring functions - speed messages/signals					12.07.05 V02.03.00	SINAMICS S	

Figure 2-144 8010 – Speed messages

© Siemens AG, 2005. All rights reserved
SINAMICS S List Manual, Edition 06.2005

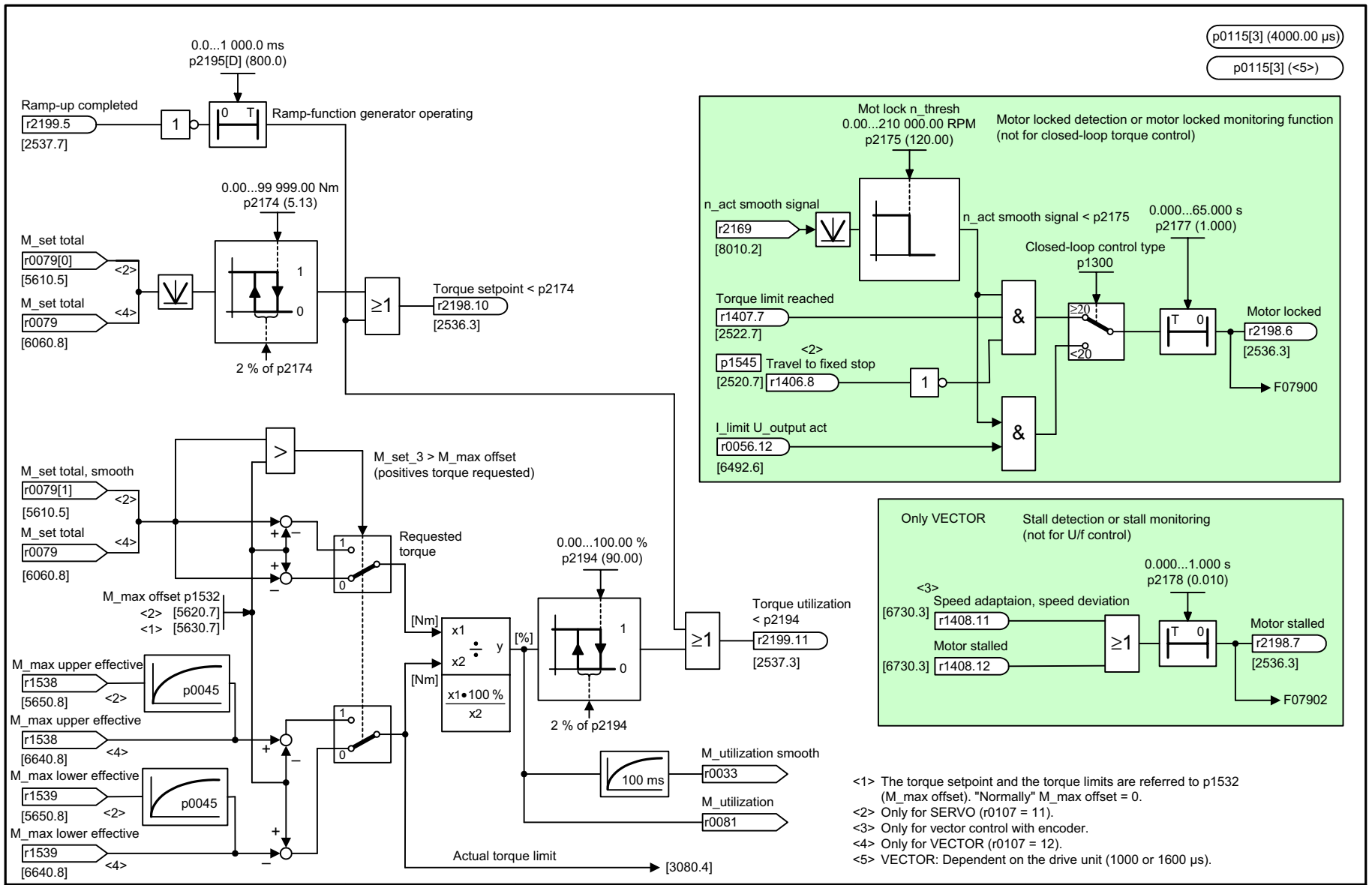

1	2	3	4	5	6	7	8
DO: SERVO, VECTOR					fp_8012_01_eng.vsd	Function diagram	- 8012 -
Messages and monitoring functions - torque messages/signals, motor locked/stalled					12.07.05 V02.03.00	SINAMICS S	

Figure 2-145 8012 – Torque messages, motor blocked/stalled

© Siemens AG, 2005. All rights reserved
SINAMICS S List Manual, Edition 06.2005

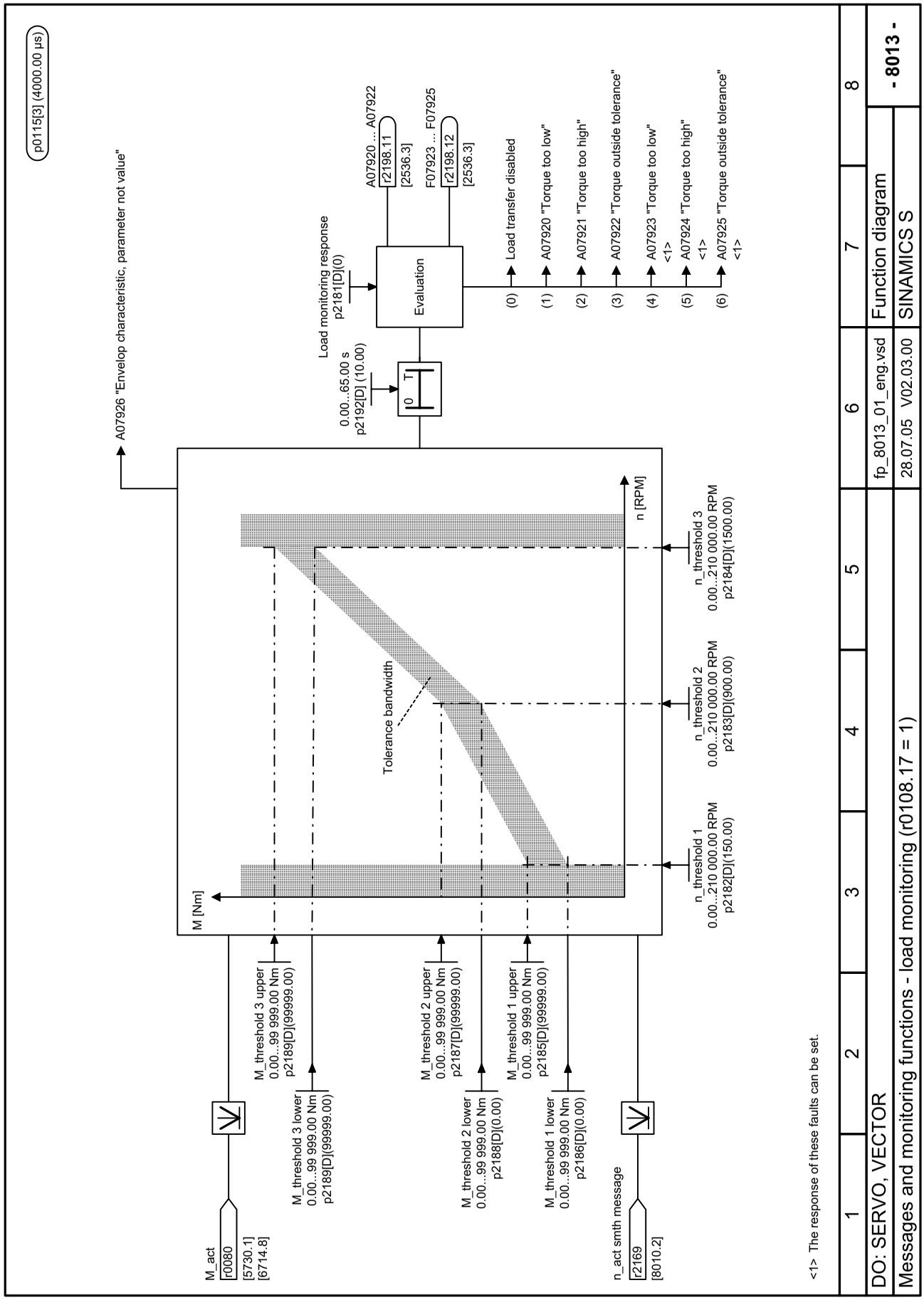

Figure 2-146 8013 – Load monitoring (r0108.17 = 1)

© Siemens AG, 2005. All rights reserved

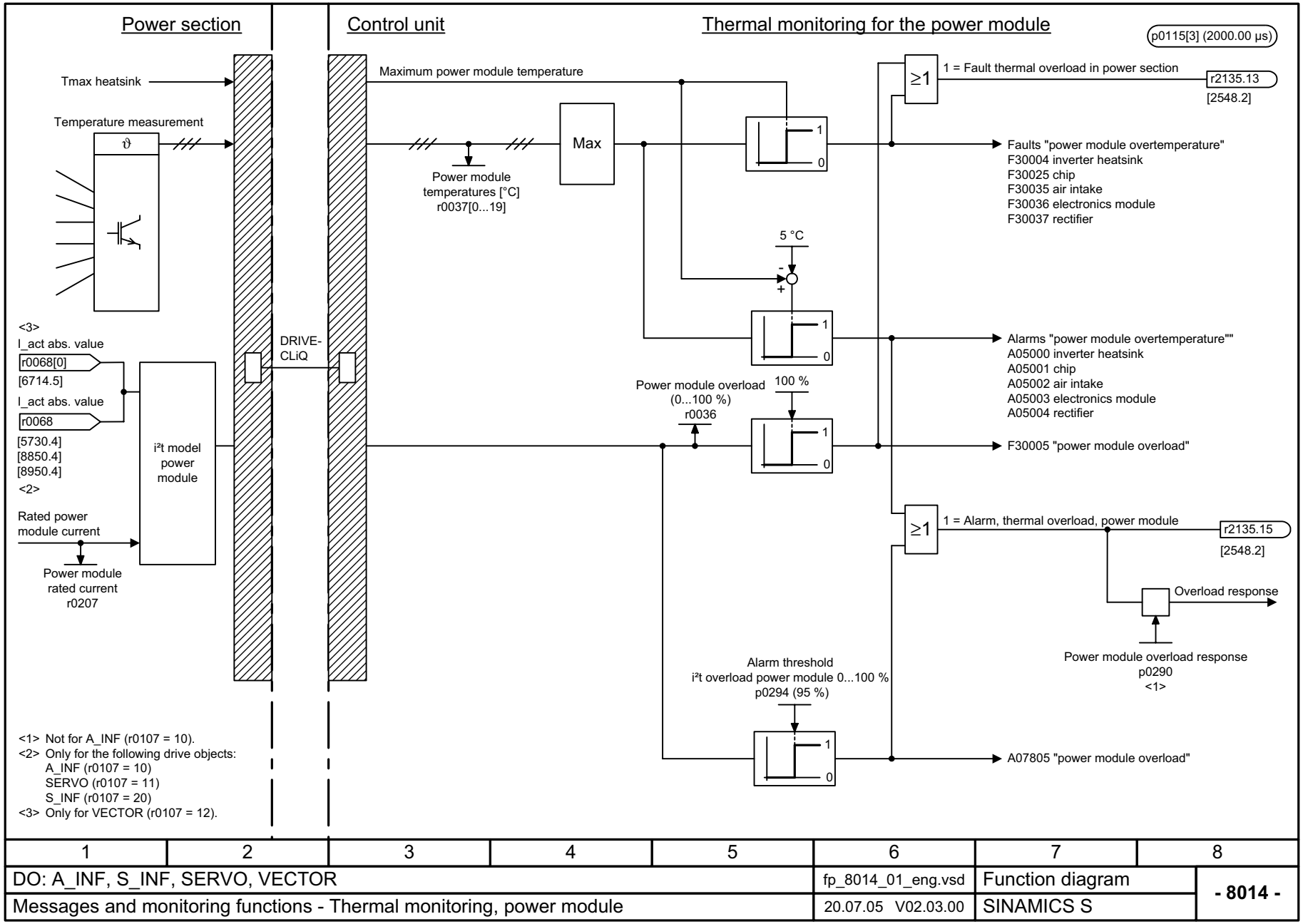

1	2	3	4	5	6	7	8
DO: A_INF, S_INF, SERVO, VECTOR					fp_8014_01_eng.vsd	Function diagram	- 8014 -
Messages and monitoring functions - Thermal monitoring, power module					20.07.05 V02.03.00	SINAMICS S	

Figure 2-147 8014 – Thermal monitoring power section

© Siemens AG, 2005. All rights reserved
SINAMICS S List Manual, Edition 06.2005

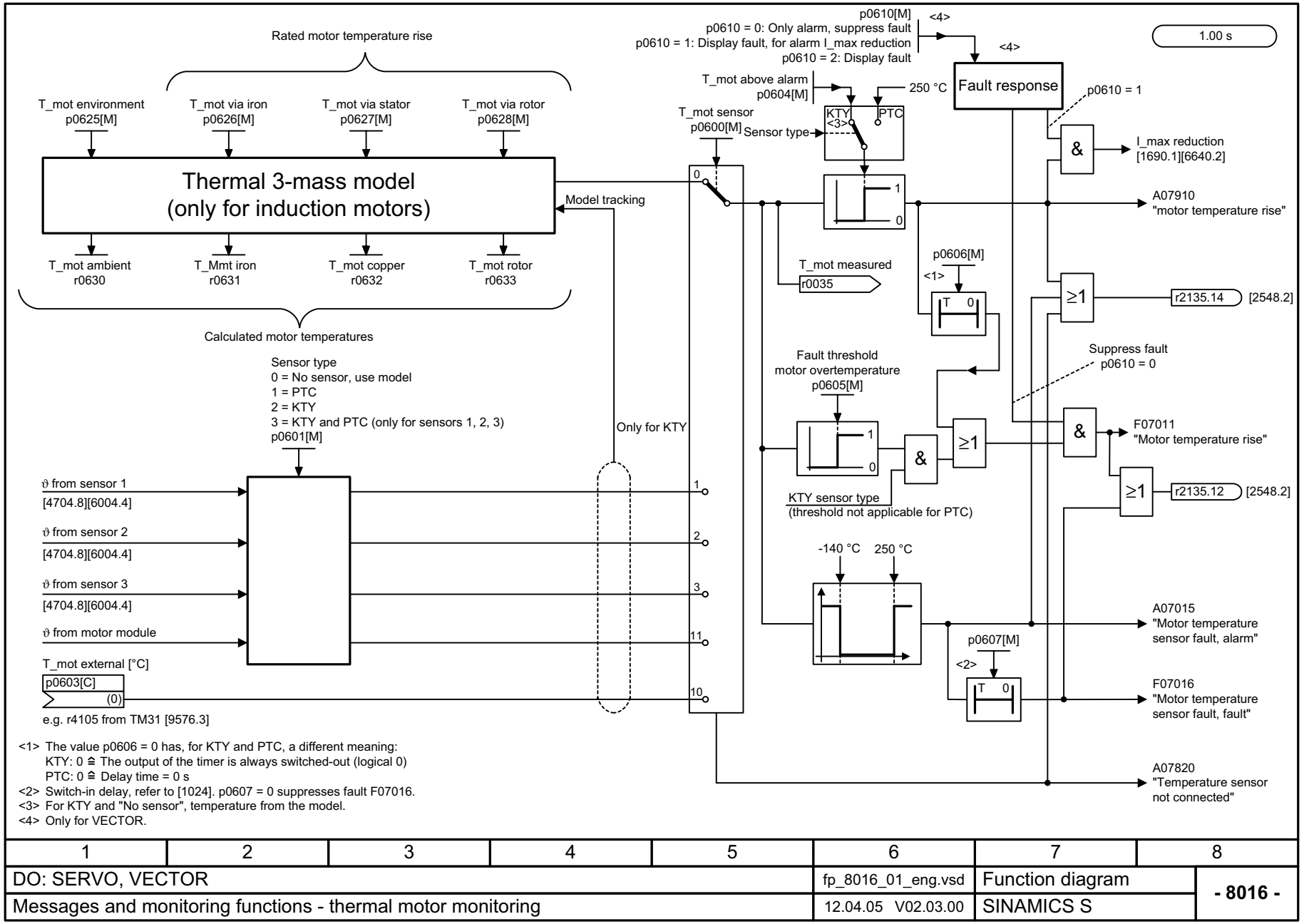

1	2	3	4	5	6	7	8
DO: SERVO, VECTOR					fp_8016_01_eng.vsd	Function diagram	- 8016 -
Messages and monitoring functions - thermal motor monitoring					12.04.05 V02.03.00	SINAMICS S	

Figure 2-148 8016 – Thermal monitoring motor

© Siemens AG, 2005. All rights reserved
SINAMICS S List Manual, Edition 06.2005

2.18 Faults and Alarms

Function diagrams

8060 – Fault buffer	2-884
8065 – Alarm buffer	2-885
8070 – Fault/warning trigger word (r2129)	2-886
8075 – Fault/warning configuration	2-887

© Siemens AG, 2005. All rights reserved

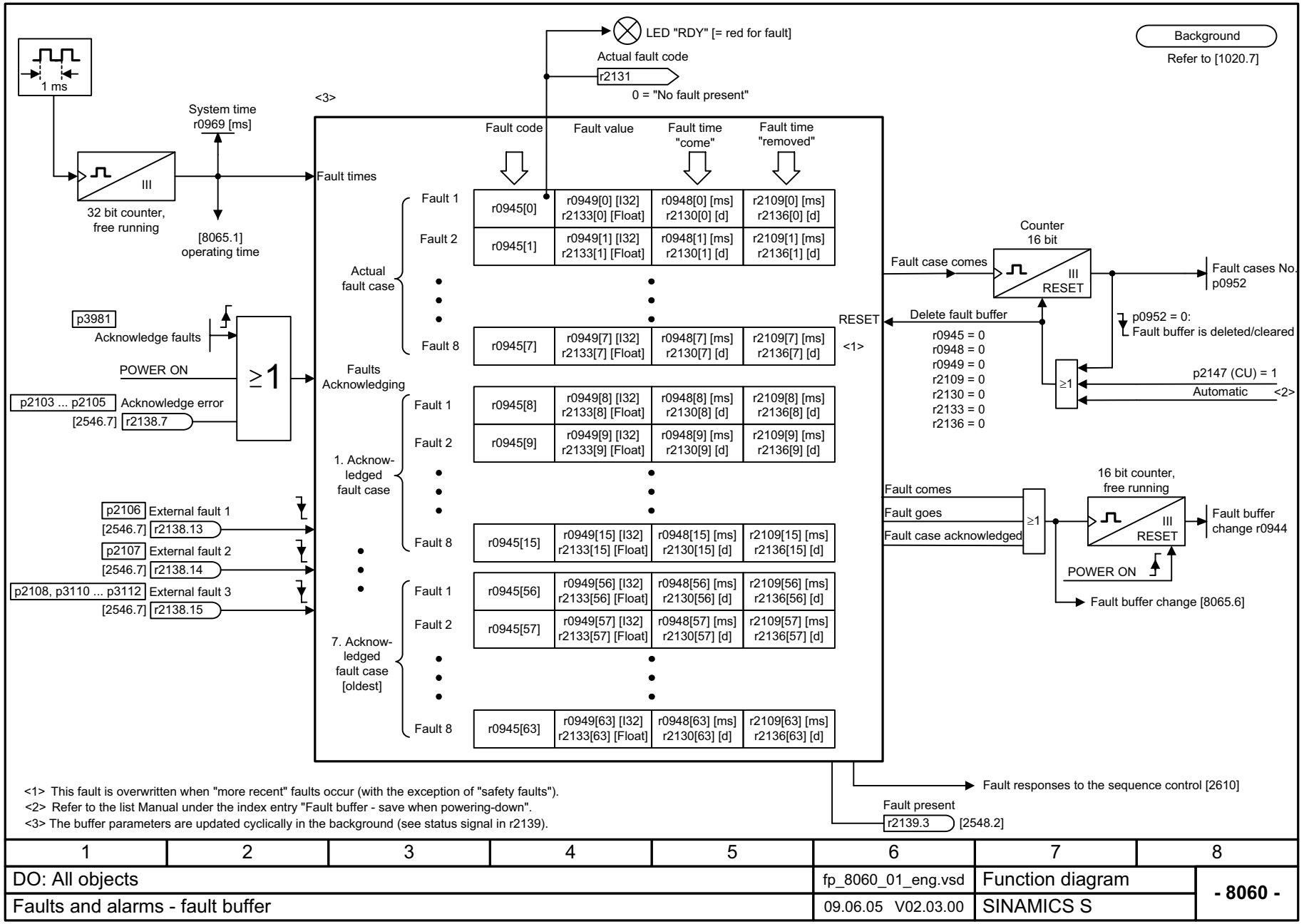

<1> This fault is overwritten when "more recent" faults occur (with the exception of "safety faults").
<2> Refer to the list Manual under the index entry "Fault buffer - save when powering-down".
<3> The buffer parameters are updated cyclically in the background (see status signal in r2139).

1	2	3	4	5	6	7	8
DO: All objects					fp_8060_01_eng.vsd	Function diagram	- 8060 -
Faults and alarms - fault buffer					09.06.05 V02.03.00	SINAMICS S	

Figure 2-149 8060 – Fault buffer

© Siemens AG, 2005. All rights reserved
SINAMICS S List Manual, Edition 06.2005

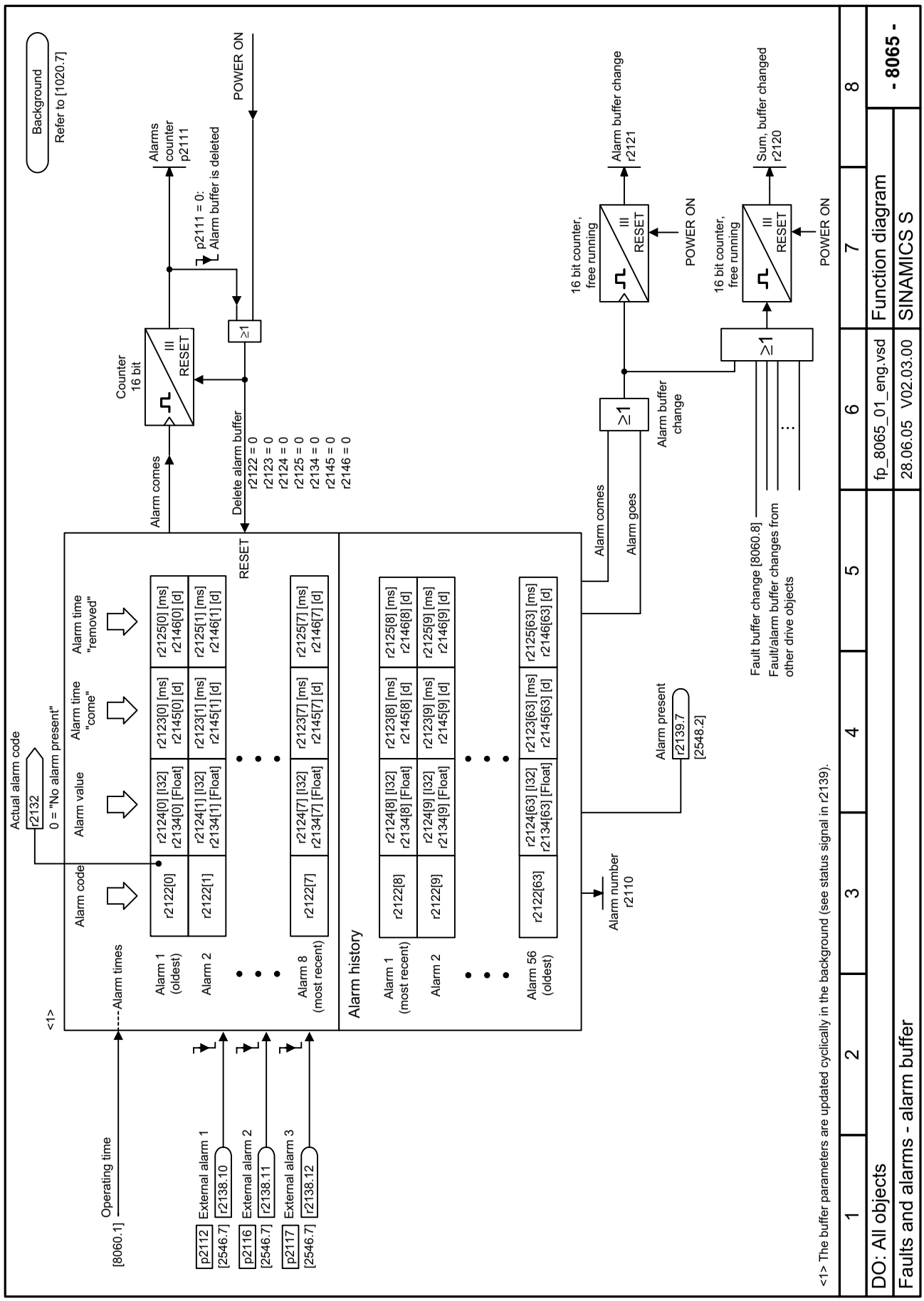

Figure 2-150 8065 – Alarm buffer

© Siemens AG, 2005. All rights reserved

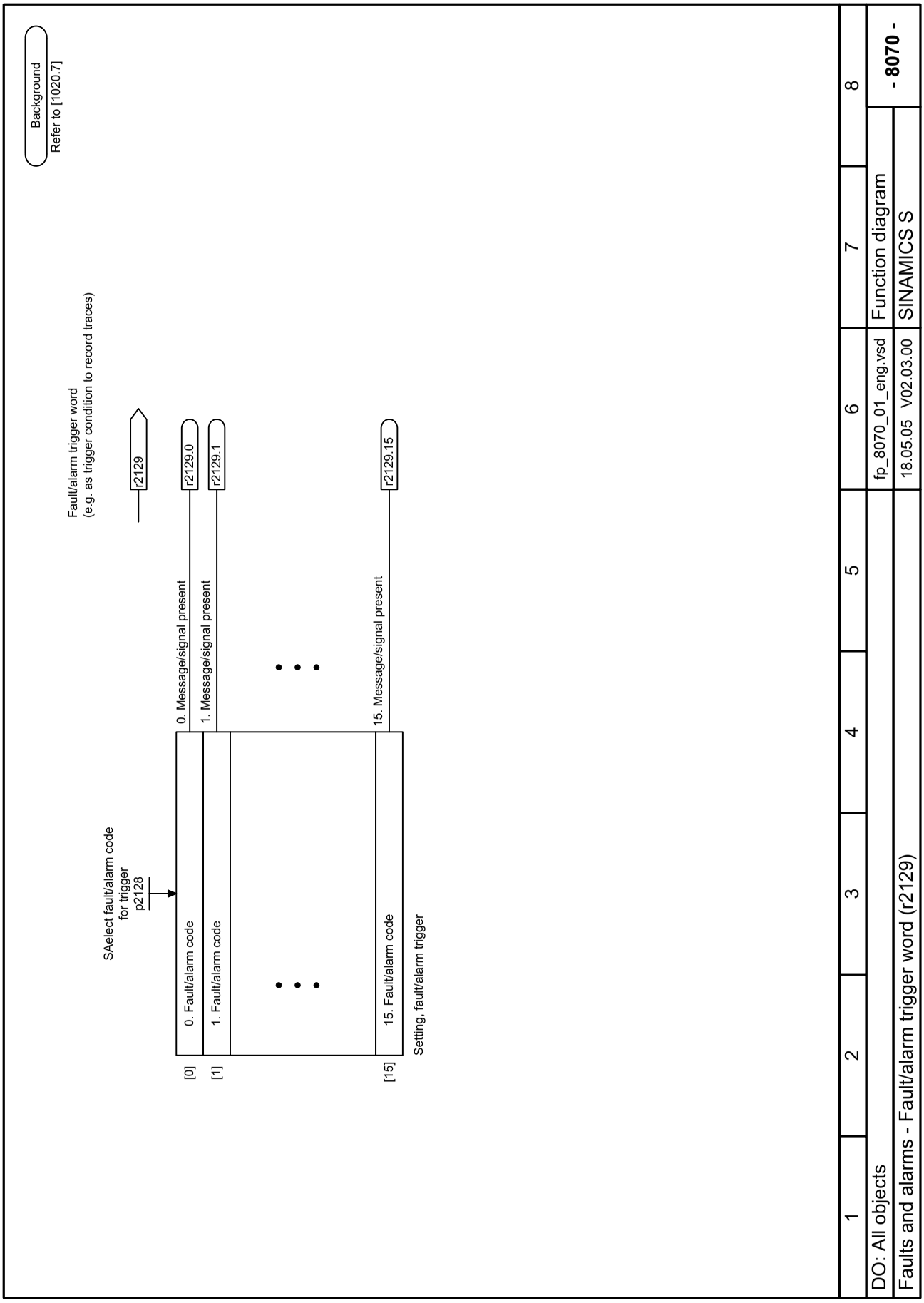

Figure 2-151 8070 – Fault/warning trigger word (r2129)

© Siemens AG, 2005. All rights reserved
SINAMICS S List Manual, Edition 06.2005

Background
Refer to [1020.7]

Changing the fault response for a maximum of 20 faults <1>

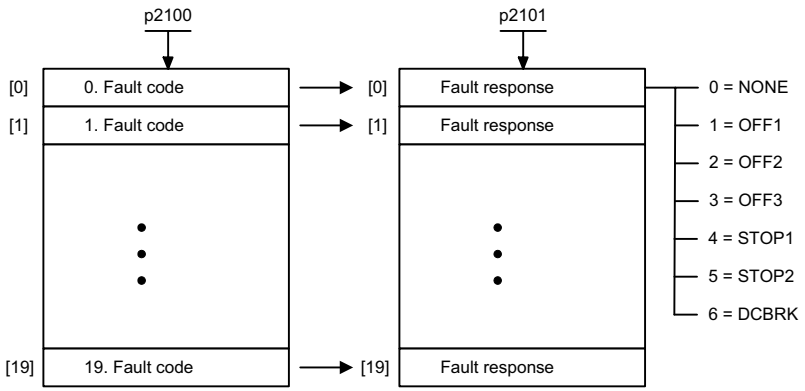

Changes the message type - fault <==> alarm for a maximum of 20 faults/alarms <1>

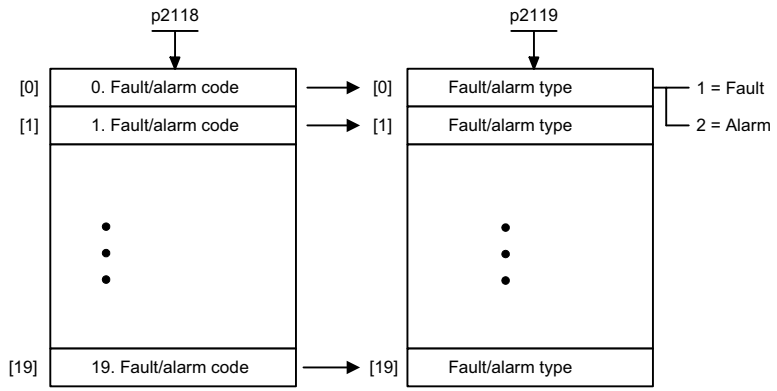

Changes the acknowledge mode for max. 20 faults <1>

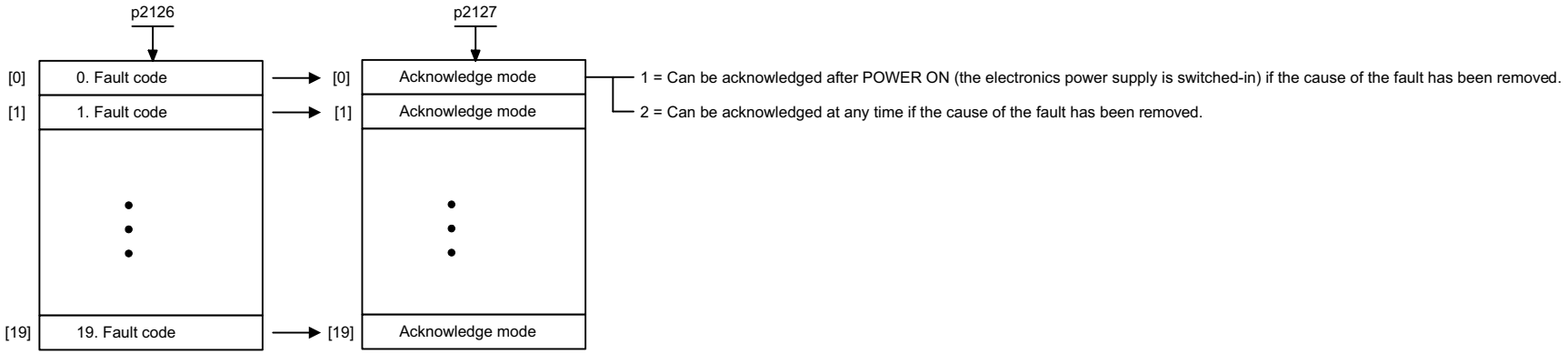

<1> In the factory setting, fault responds, acknowledge mode and message type are practically and sensibly pre-assigned for all faults and alarms.
Possible changes can only be made in an individual value range that is specified by SIEMENS.
When the message type is changed, the supplementary information "moves" from fault value r0949 to alarm value r2124 and vice versa.

1	2	3	4	5	6	7	8
DO: A_INF, SERVO, VECTOR, TMxx, CU					fp_8075_01_eng.vsd	Function diagram	- 8075 -
Faults and alarms - fault/alarm configuration					02.08.04 V02.03.00	SINAMICS S	

Figure 2-152 8075 – Fault/warning configuration

© Siemens AG, 2005. All rights reserved
SINAMICS S List Manual, Edition 06.2005

2.19 Test sockets

Function diagrams

8134 – Measuring sockets 2-889

© Siemens AG, 2005. All rights reserved

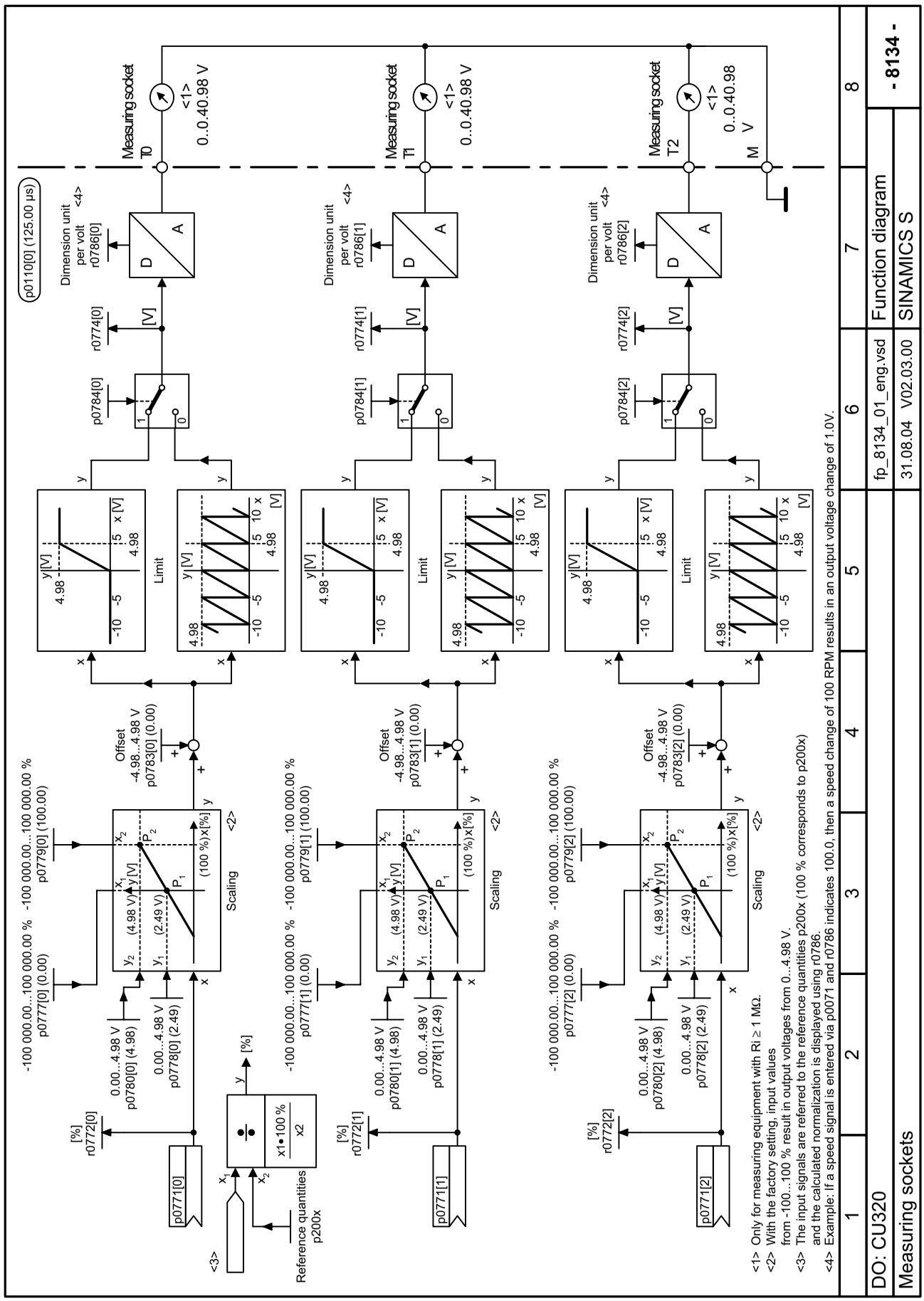

Figure 2-153 8134 – Measuring sockets

© Siemens AG, 2005. All rights reserved

2.20 Data records

Function diagrams

8560 – Command data sets (CDS)	2-891
8565 – Drive data sets (DDS)	2-892
8570 – Encoder data sets (EDS)	2-893
8575 – Motor data sets (MDS)	2-894

© Siemens AG, 2005. All rights reserved

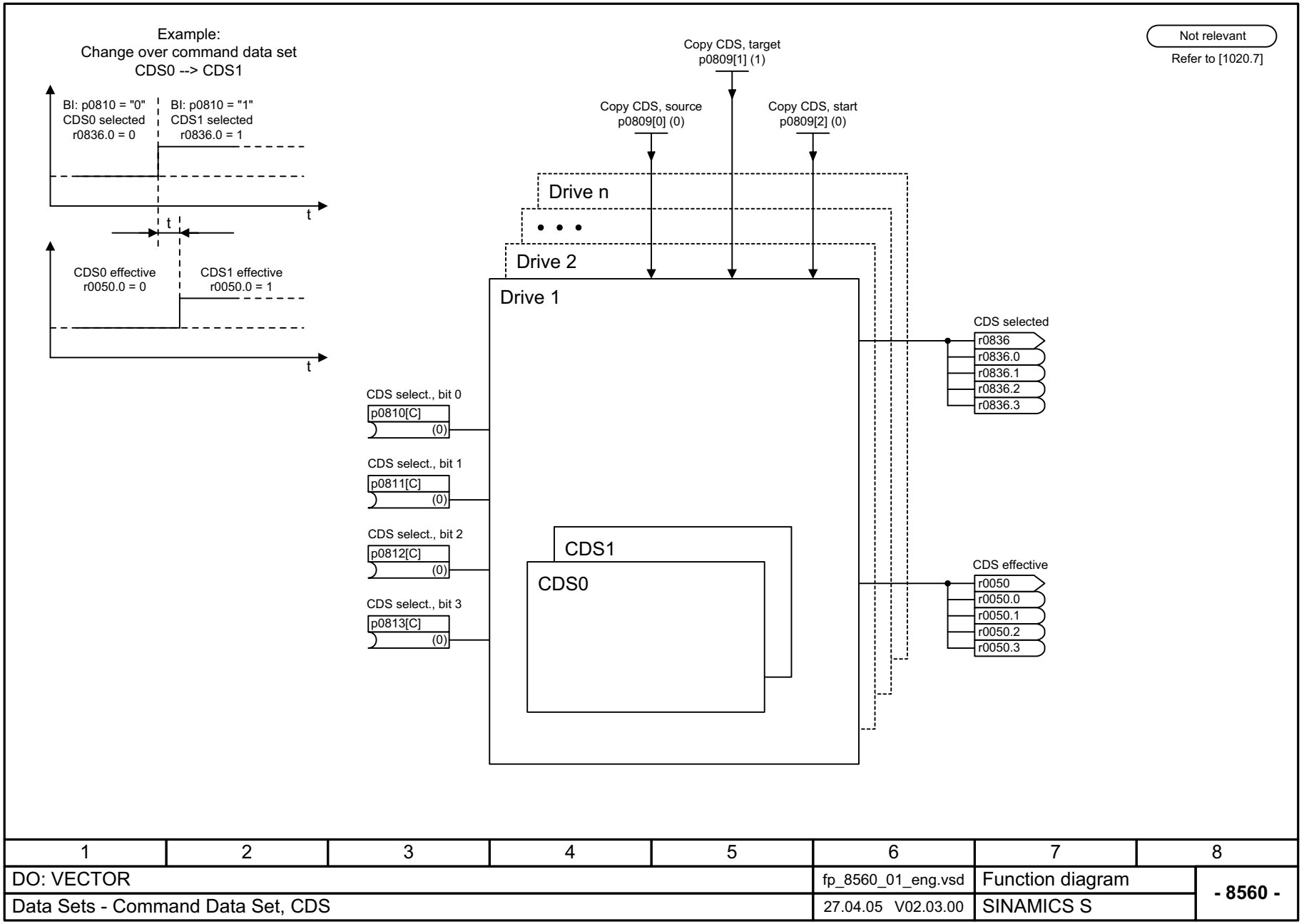

Figure 2-154 8560 – Command data sets (CDS)

1	2	3	4	5	6	7	8
DO: VECTOR					fp_8560_01_eng.vsd	Function diagram	- 8560 -
Data Sets - Command Data Set, CDS					27.04.05 V02.03.00	SINAMICS S	

© Siemens AG, 2005. All rights reserved
SINAMICS S List Manual, Edition 06.2005

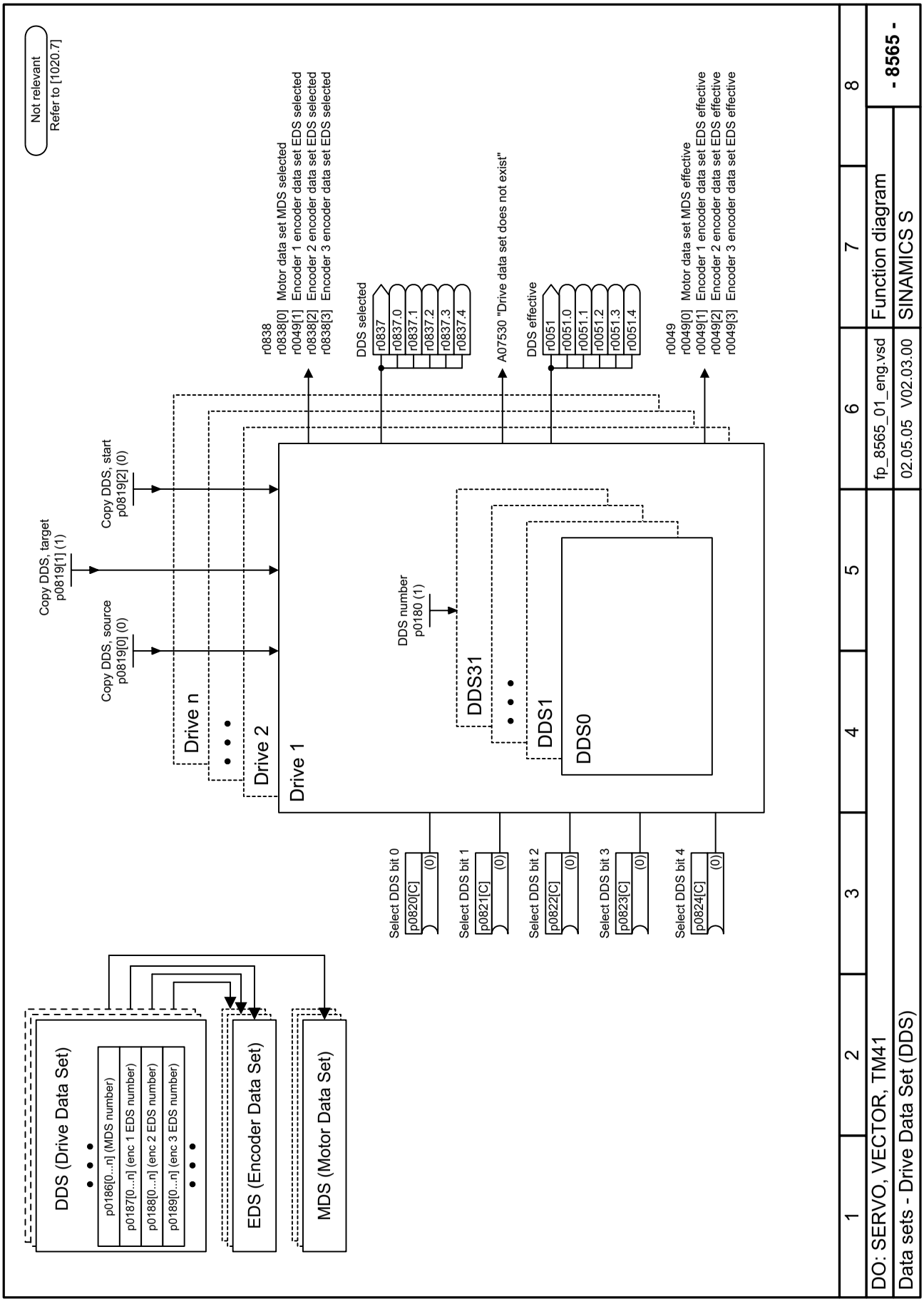

Figure 2-155 8565 – Drive data sets (DDS)

© Siemens AG, 2005. All rights reserved
SINAMICS S List Manual, Edition 06.2005

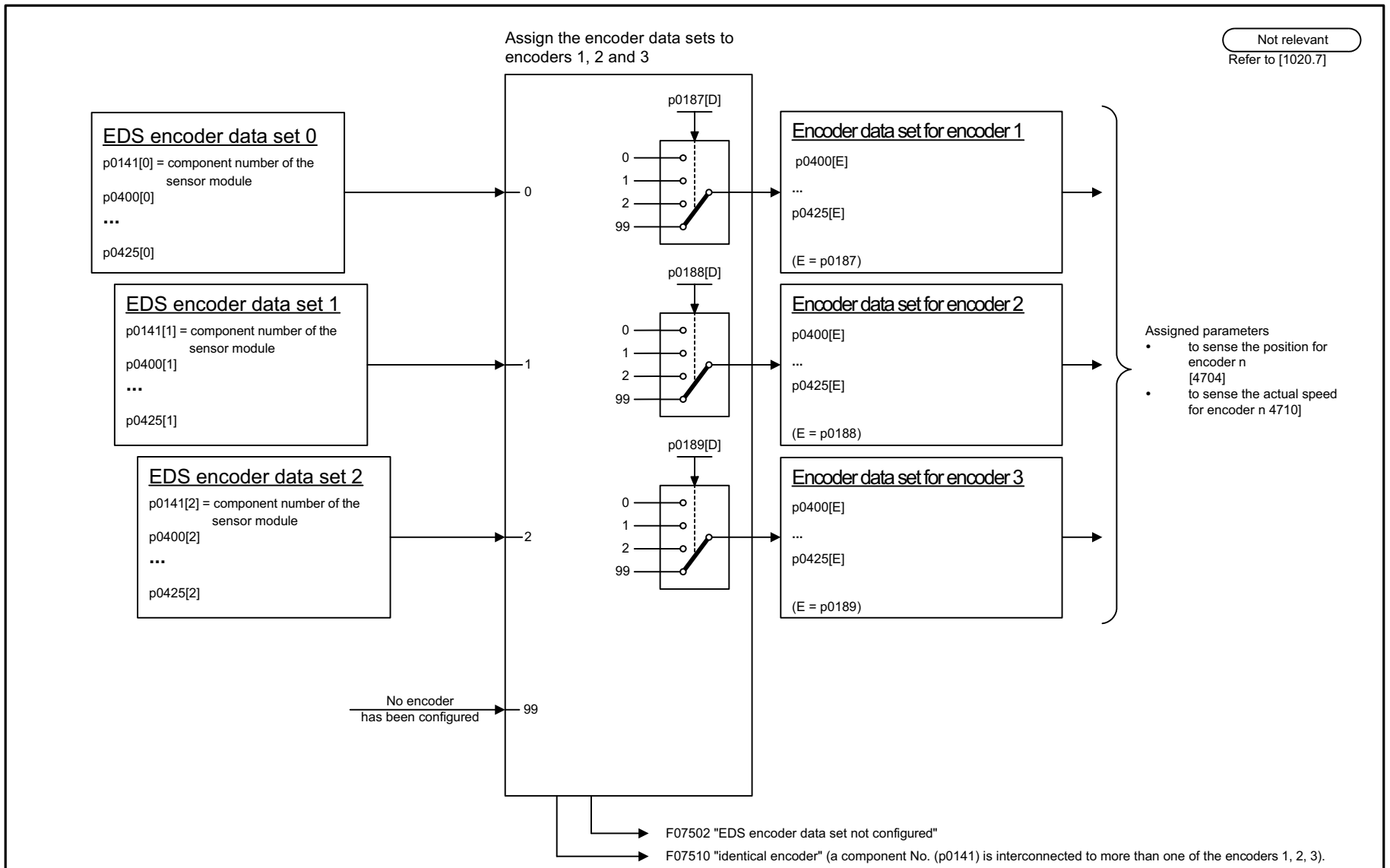

1	2	3	4	5	6	7	8
DO: SERVO, VECTOR					fp_8570_01_eng.vsd	Function diagram	- 8570 -
Data sets - encoder data sets, EDS					17.06.04 V02.03.00	SINAMICS S	

Figure 2-156 8570 – Encoder data sets (EDS)

© Siemens AG, 2005. All rights reserved
SINAMICS S List Manual, Edition 06.2005

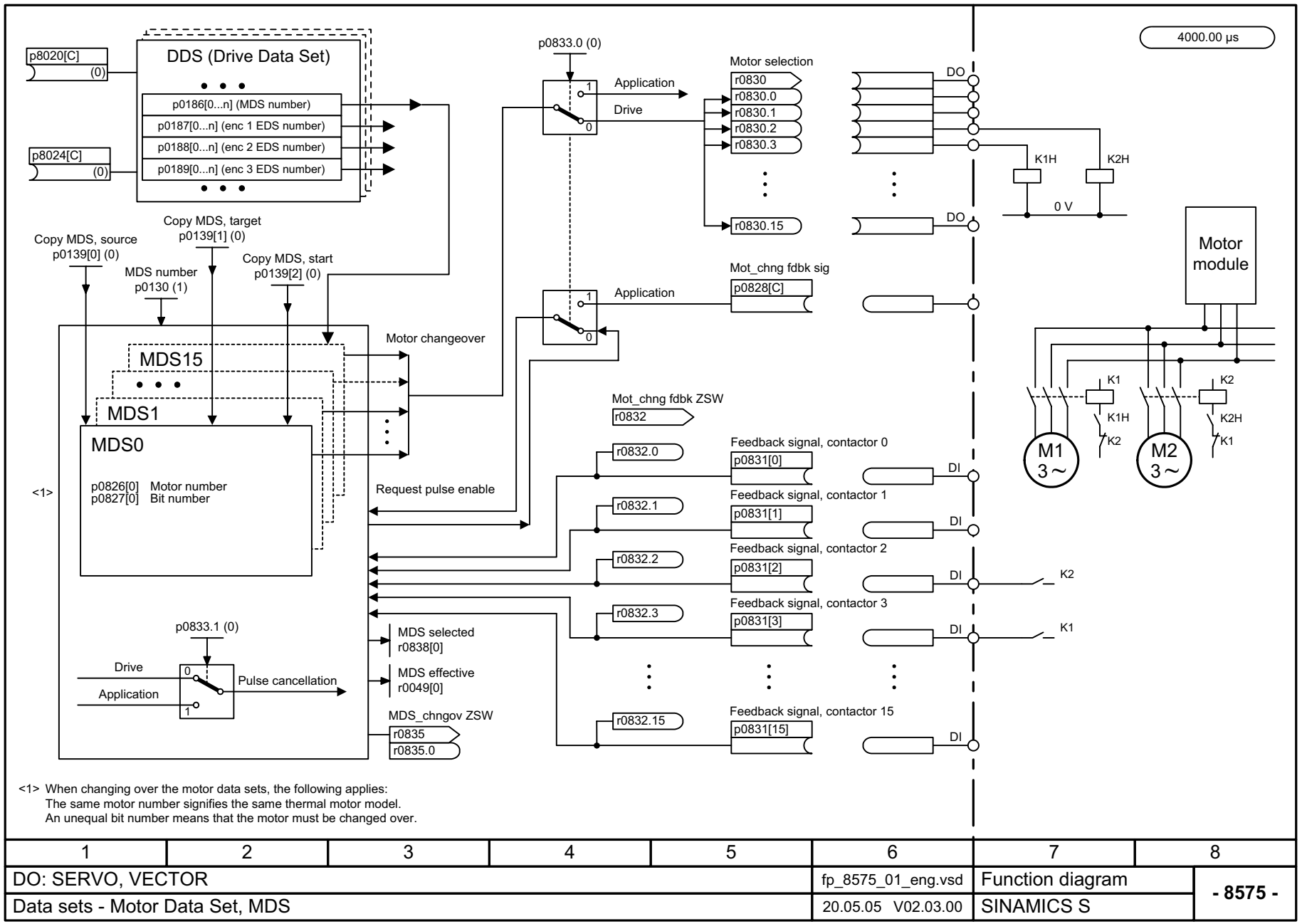

<1> When changing over the motor data sets, the following applies:
The same motor number signifies the same thermal motor model.
An unequal bit number means that the motor must be changed over.

1	2	3	4	5	6	7	8
DO: SERVO, VECTOR					fp_8575_01_eng.vsd	Function diagram	- 8575 -
Data sets - Motor Data Set, MDS					20.05.05 V02.03.00	SINAMICS S	

Figure 2-157 8575 – Motor data sets (MDS)

© Siemens AG, 2005. All rights reserved
SINAMICS S List Manual, Edition 06.2005

2.21 Basic Infeed

Function diagrams

8720 – Control word sequential control infeed	2-896
8726 – Status word sequential control infeed	2-897
8732 – Processor	2-898
8734 – Missing enable signals, line contactor control	2-899
8750 – Interface to the basic infeed power unit (control signals, actual values)	2-900
8760 – Messages and monitors	2-901

© Siemens AG, 2005. All rights reserved

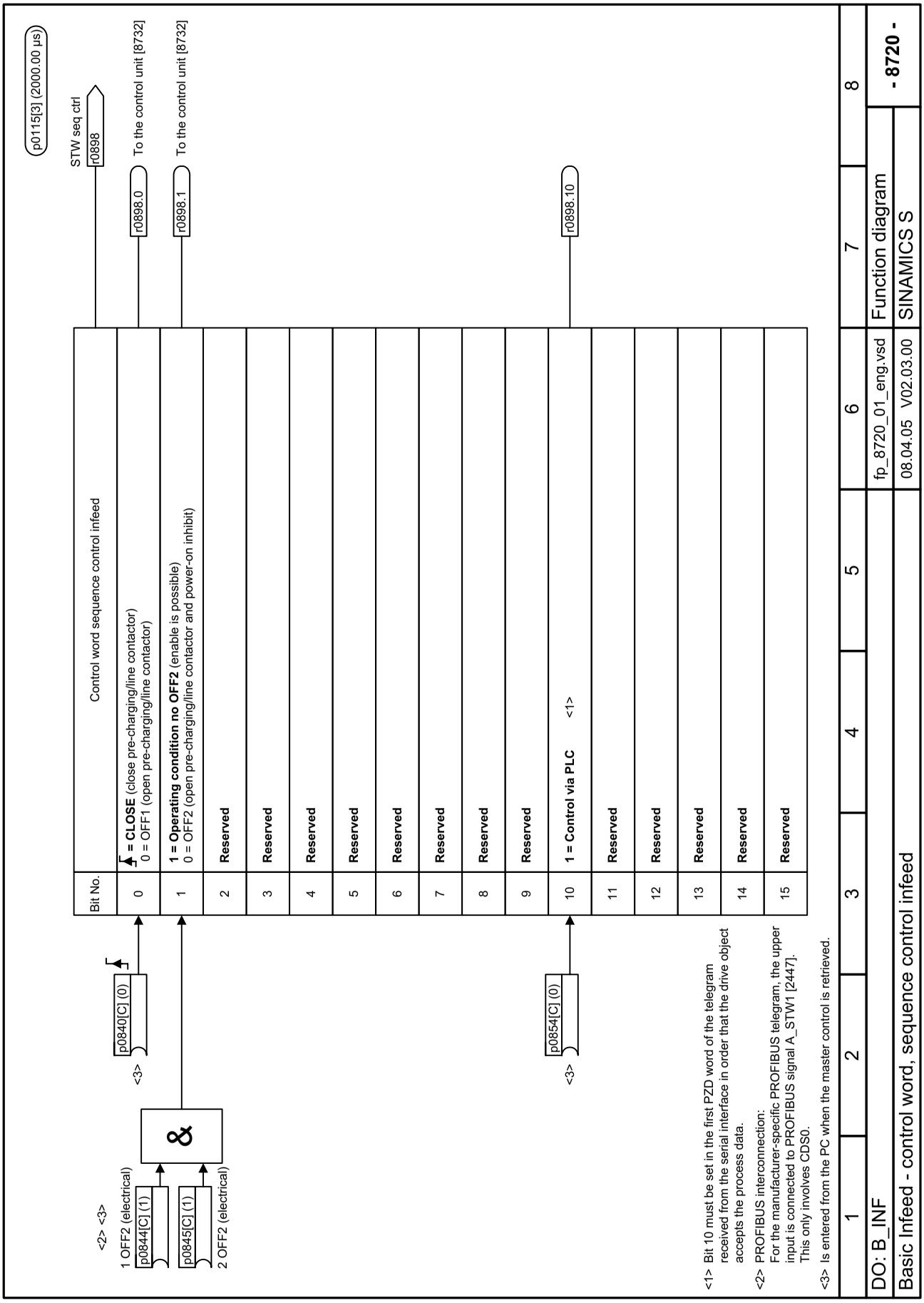

Figure 2-158 8720 – Control word sequential control infeed

© Siemens AG, 2005. All rights reserved
SINAMICS S List Manual, Edition 06.2005

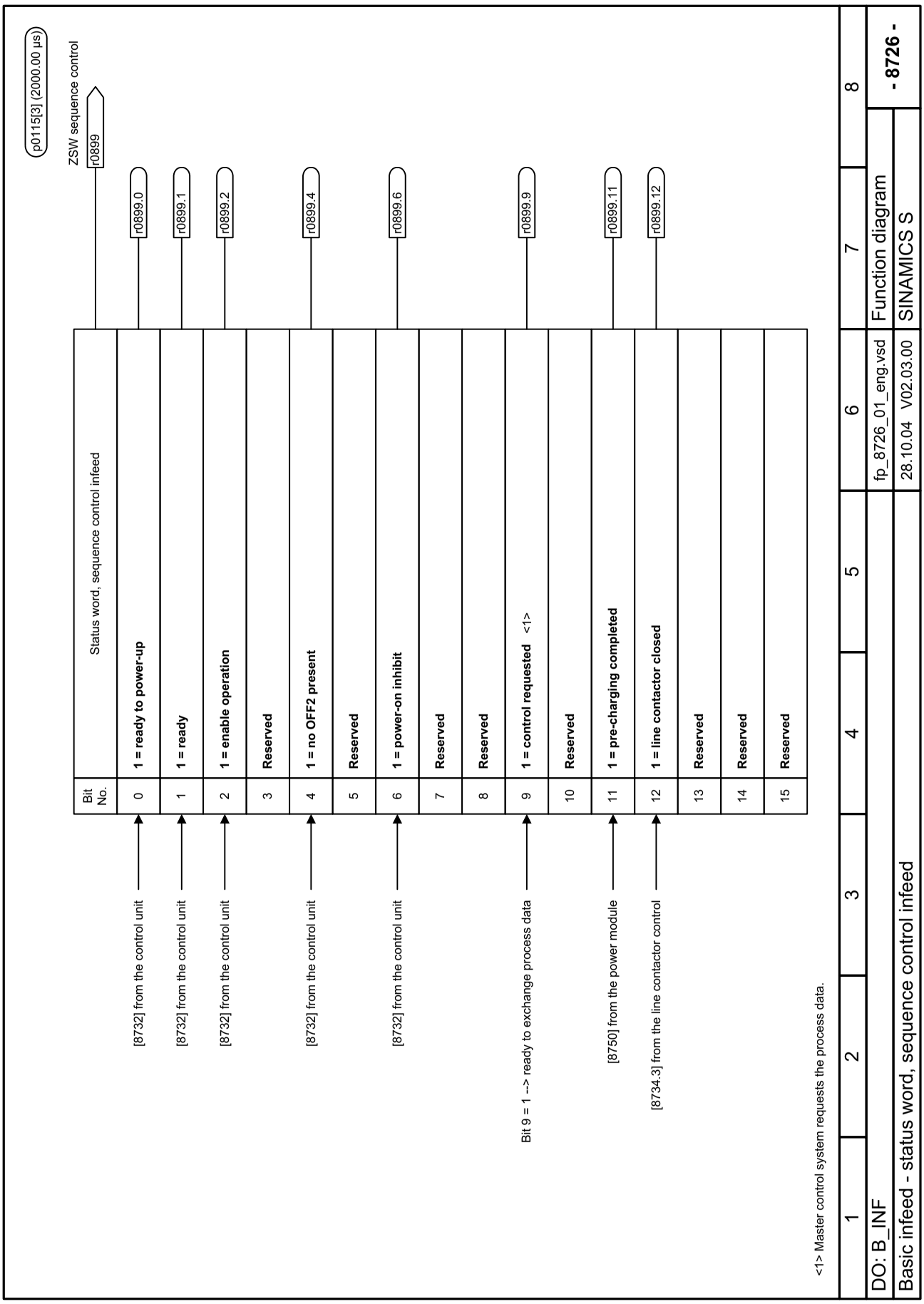

Figure 2-159 8726 – Status word sequential control infeed

© Siemens AG, 2005. All rights reserved

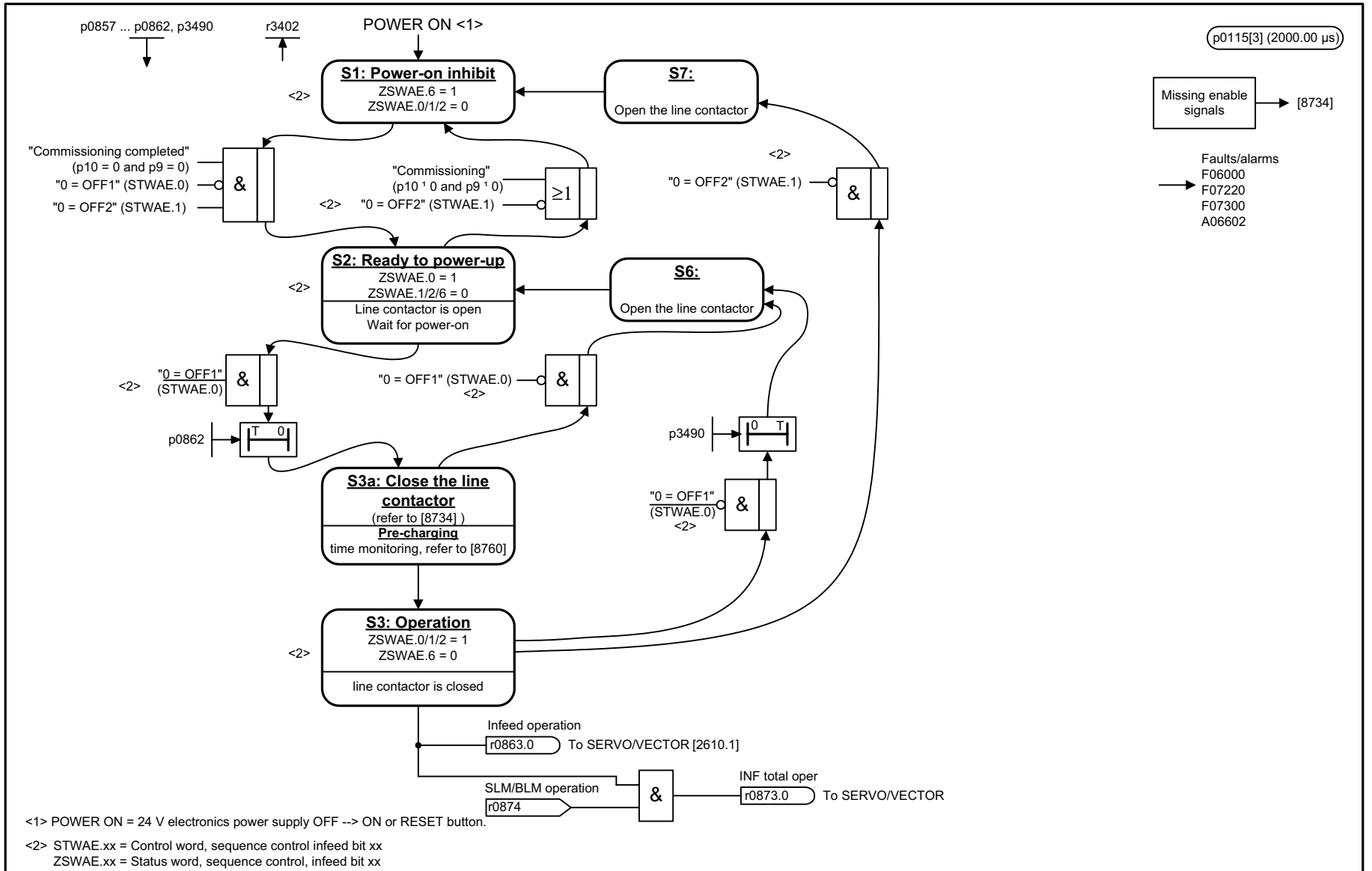

<1> POWER ON = 24 V electronics power supply OFF --> ON or RESET button.

<2> STWAE.xx = Control word, sequence control infeed bit xx
ZSWAE.xx = Status word, sequence control, infeed bit xx

1	2	3	4	5	6	7	8
DO: B_INF					fp_8732_01_eng.vsd	Function diagram	- 8732 -
Basic Infeed - control unit					20.05.05 V02.03.00	SINAMICS S	

Figure 2-160 8732 – Processor

© Siemens AG, 2005. All rights reserved
SINAMICS S List Manual, Edition 06.2005

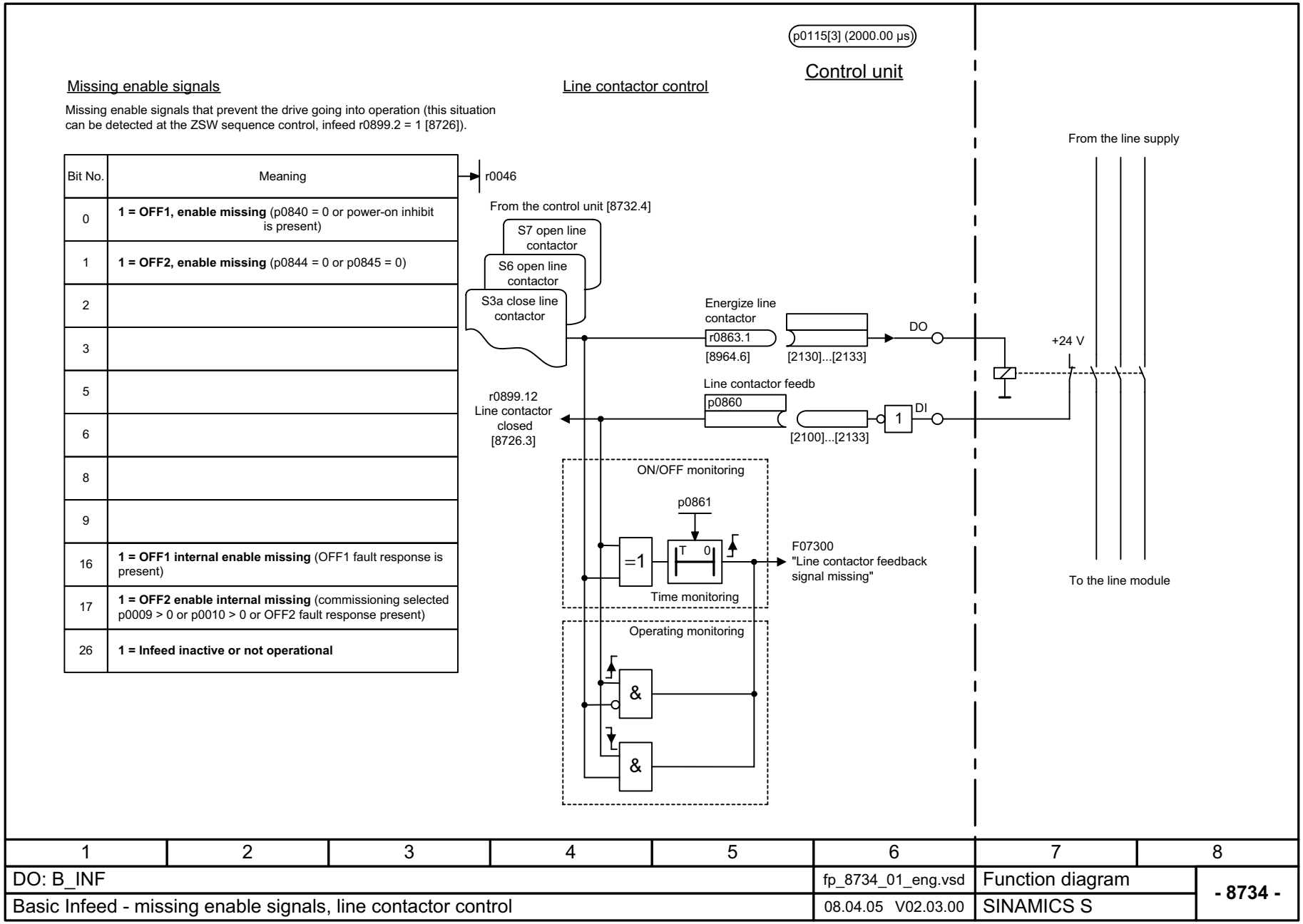

Figure 2-161 8734 – Missing enable signals, line contactor control

1	2	3	4	5	6	7	8
DO: B_INF					fp_8734_01_eng.vsd	Function diagram	- 8734 -
Basic Infeed - missing enable signals, line contactor control					08.04.05 V02.03.00	SINAMICS S	

© Siemens AG, 2005. All rights reserved
SINAMICS S List Manual, Edition 06.2005

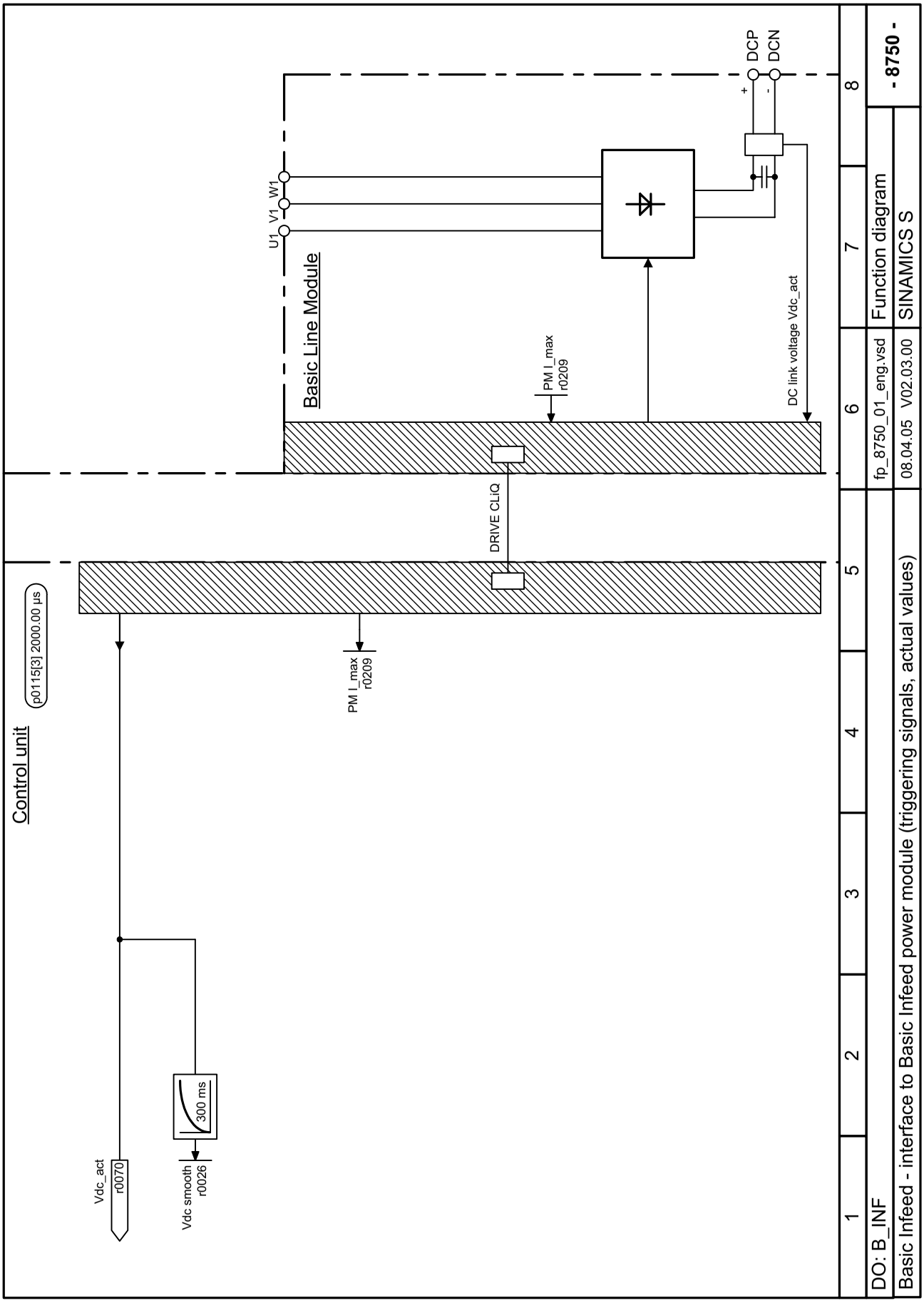

Figure 2-162 8750 – Interface to the basic infeed power unit (control signals, actual values)

© Siemens AG, 2005. All rights reserved
SINAMICS S List Manual, Edition 06.2005

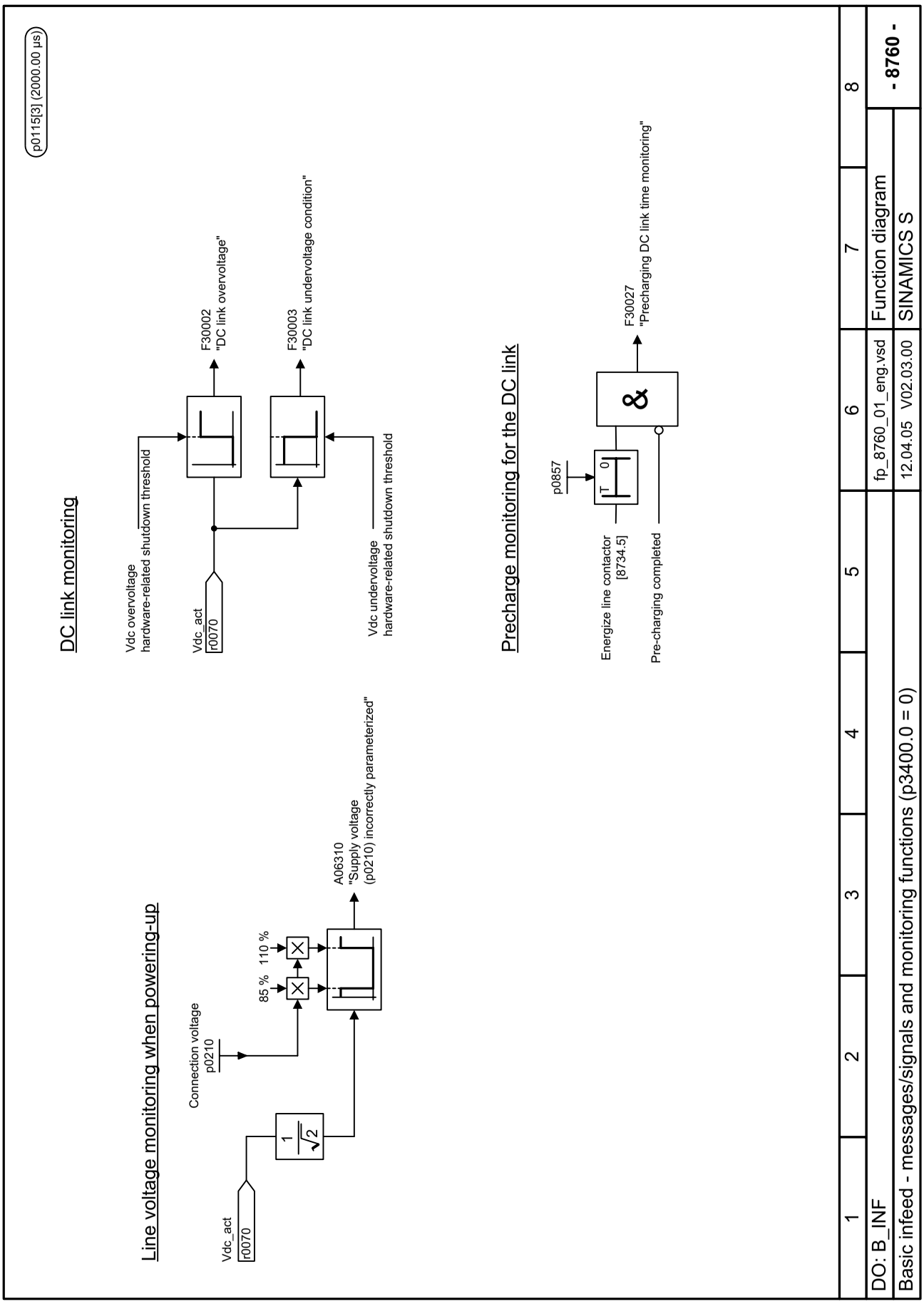

Figure 2-163 8760 – Messages and monitors

© Siemens AG, 2005. All rights reserved

2.22 Smart Infeed

Function diagrams

8820 – Control word sequential control infeed	2-903
8826 – Status word sequential control infeed	2-904
8828 – Status word infeed	2-905
8832 – Processor	2-906
8834 – Missing enable signals, line contactor control	2-907
8850 – Interface to the Smart Infeed (control signals, actual values)	2-908
8860 – Messages and monitors, supply voltage monitor	2-909
8864 – Messages and monitoring signals, line frequency and Vdc monitoring	2-910

© Siemens AG, 2005. All rights reserved

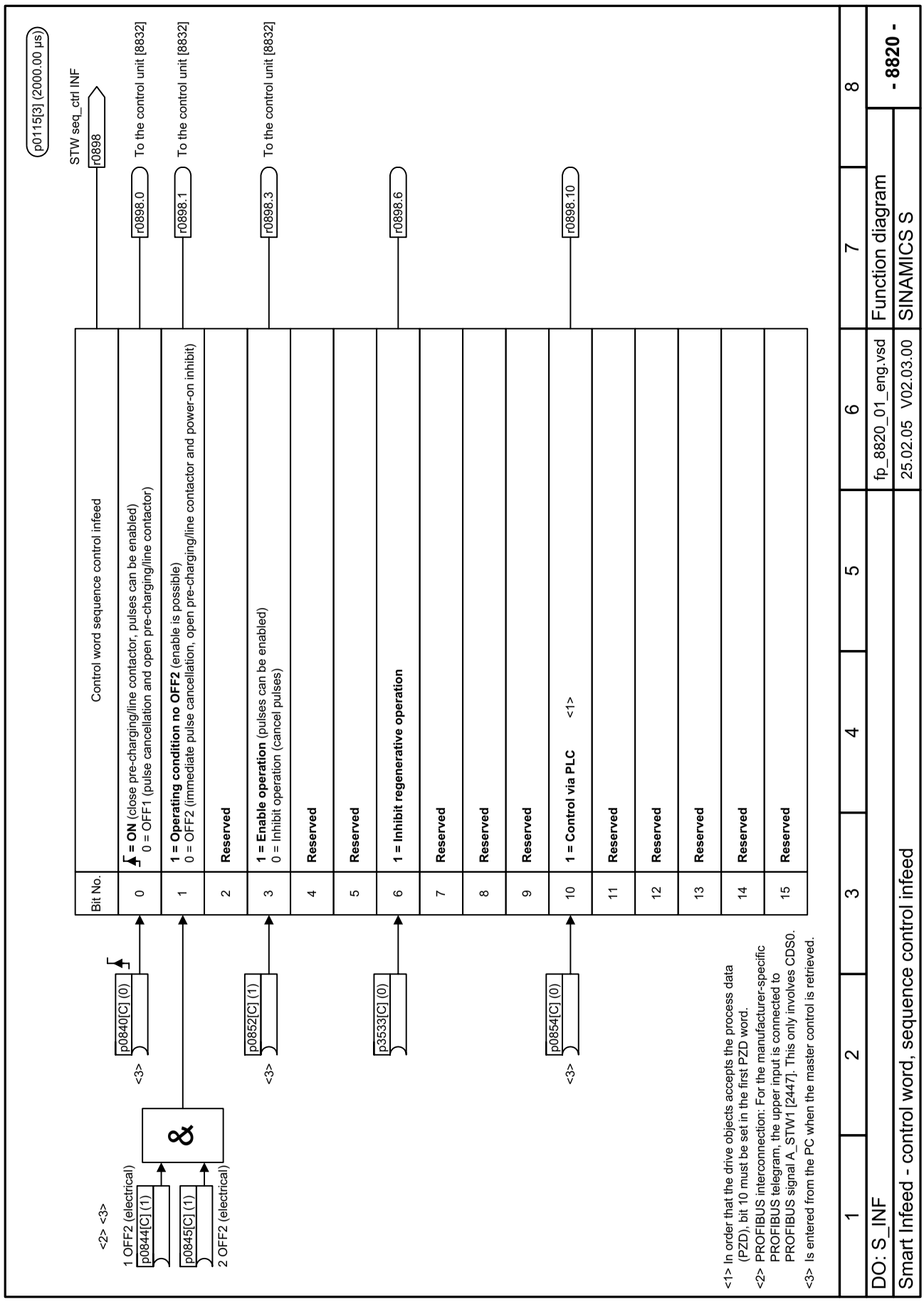

Figure 2-164 8820 – Control word sequential control infeed

© Siemens AG, 2005. All rights reserved

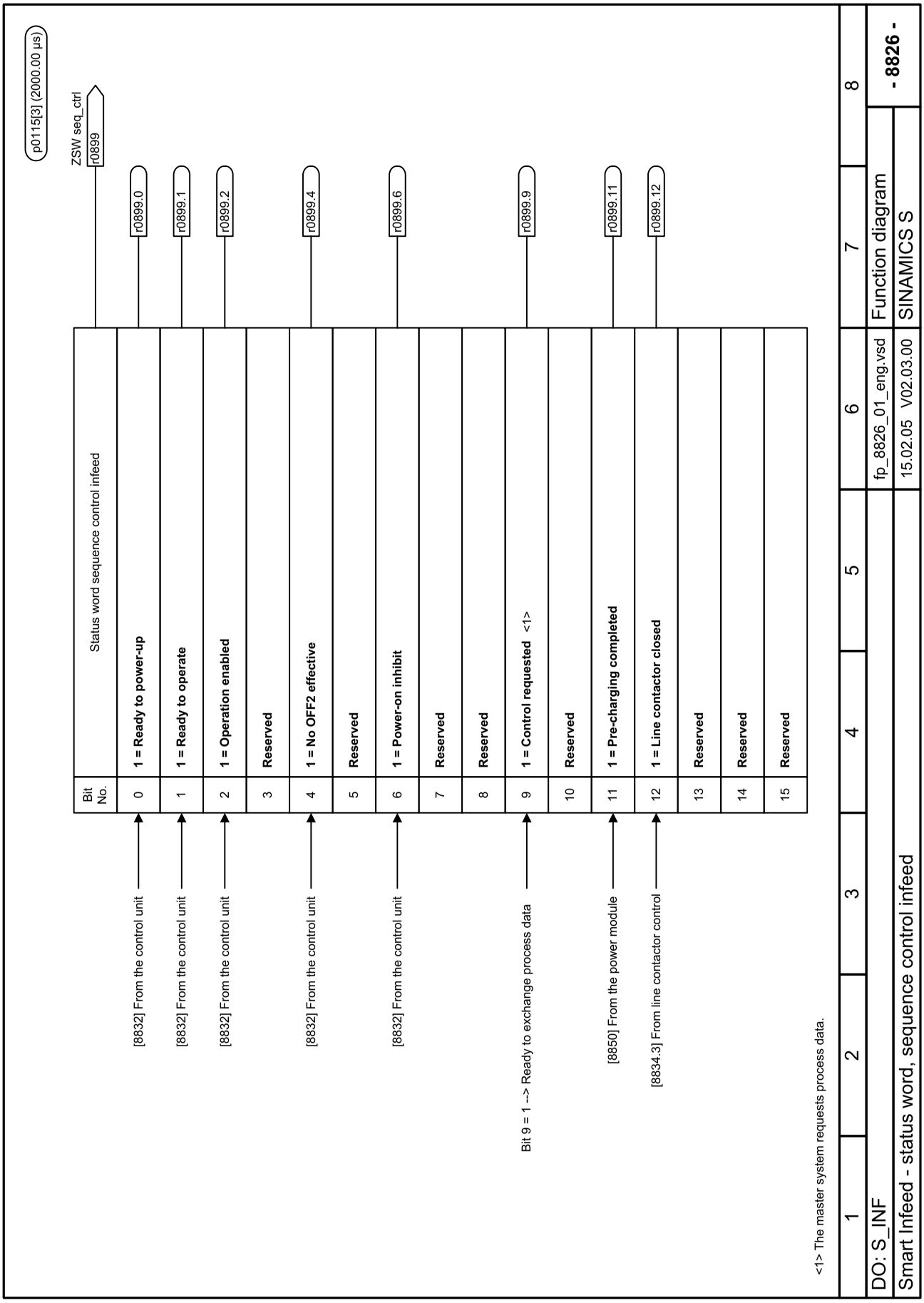

Figure 2-165 8826 – Status word sequential control infeed

© Siemens AG, 2005. All rights reserved

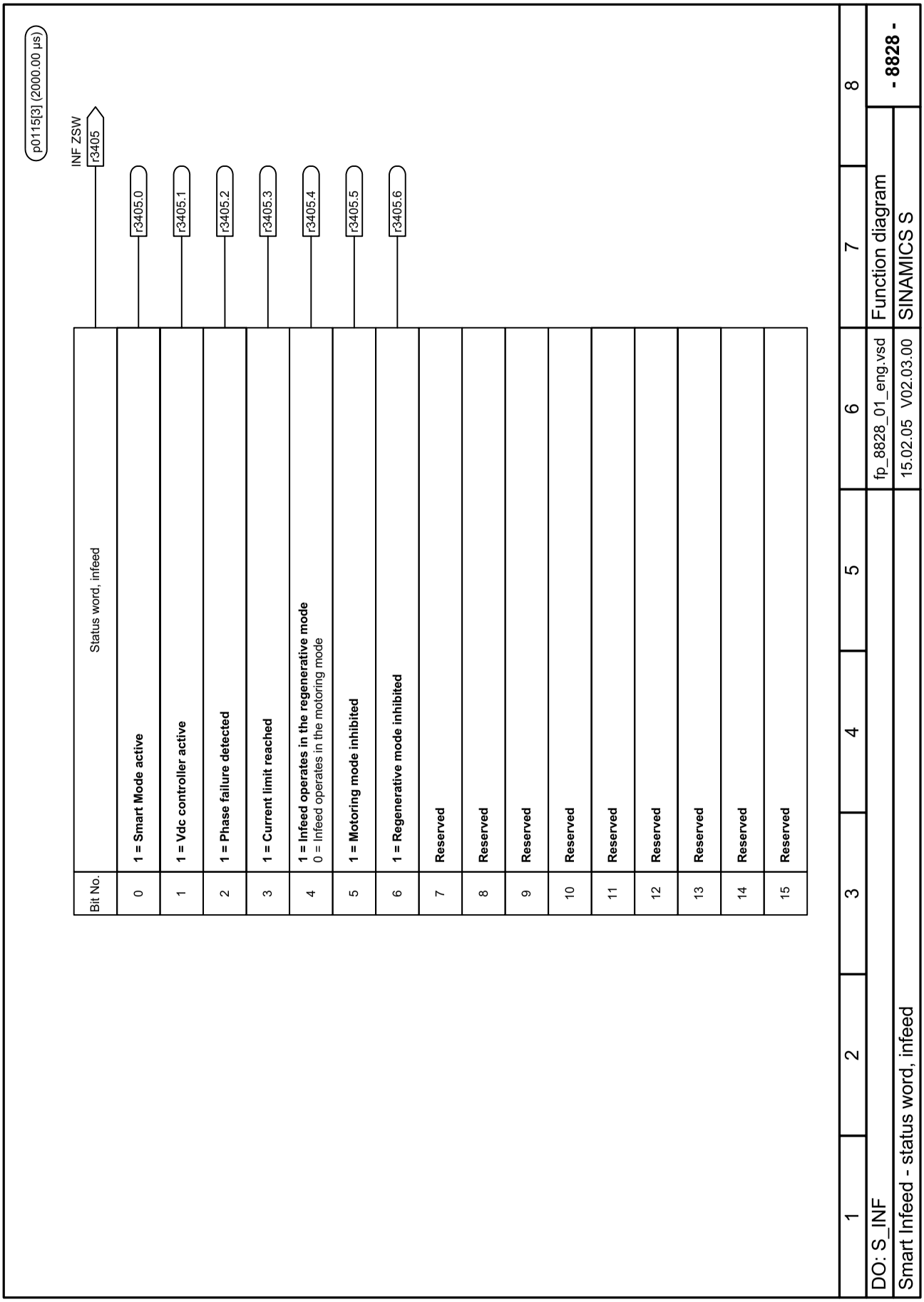

Figure 2-166 8828 – Status word infeed

© Siemens AG, 2005. All rights reserved

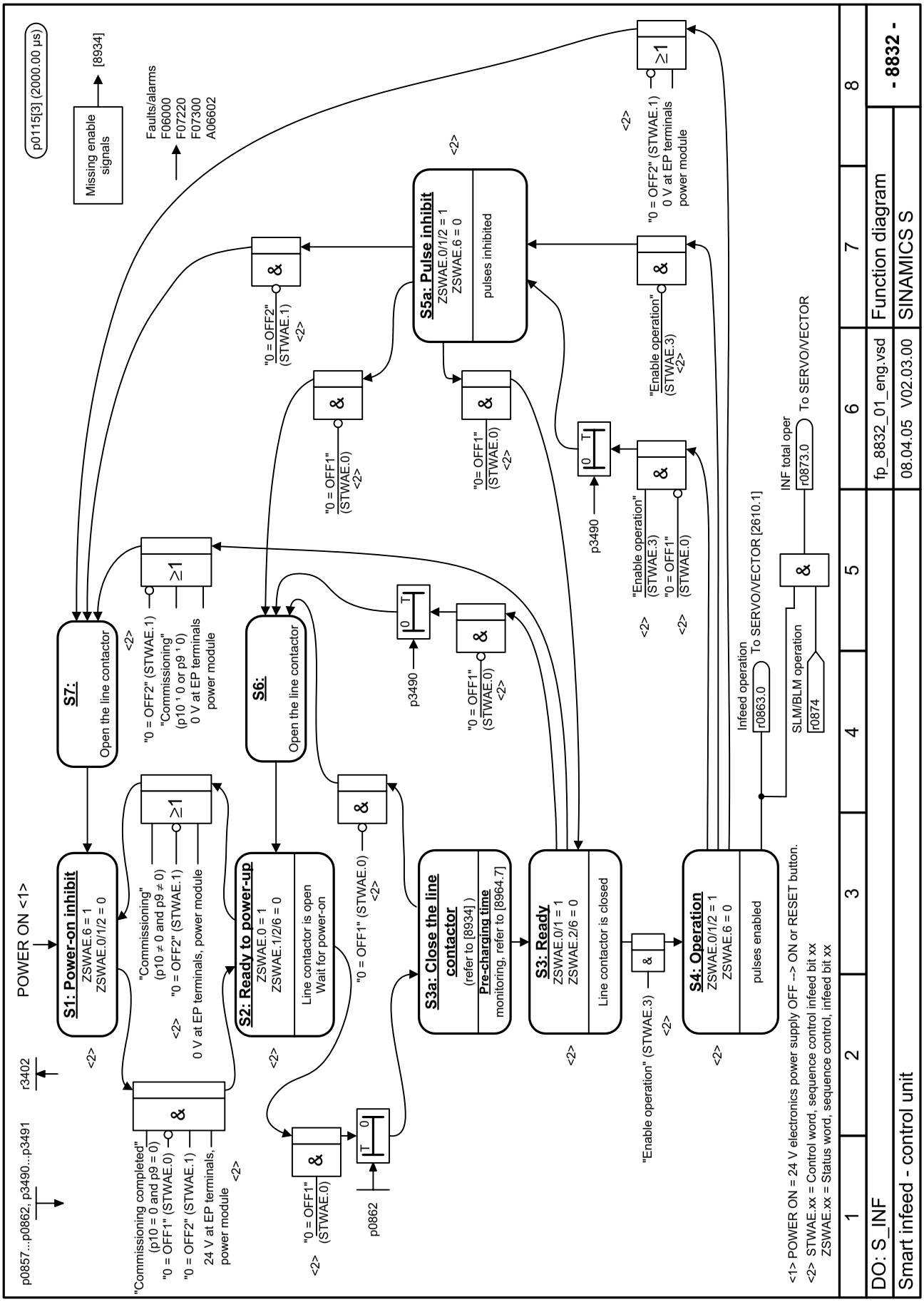

Figure 2-167 8832 – Processor

© Siemens AG, 2005. All rights reserved
SINAMICS S List Manual, Edition 06.2005

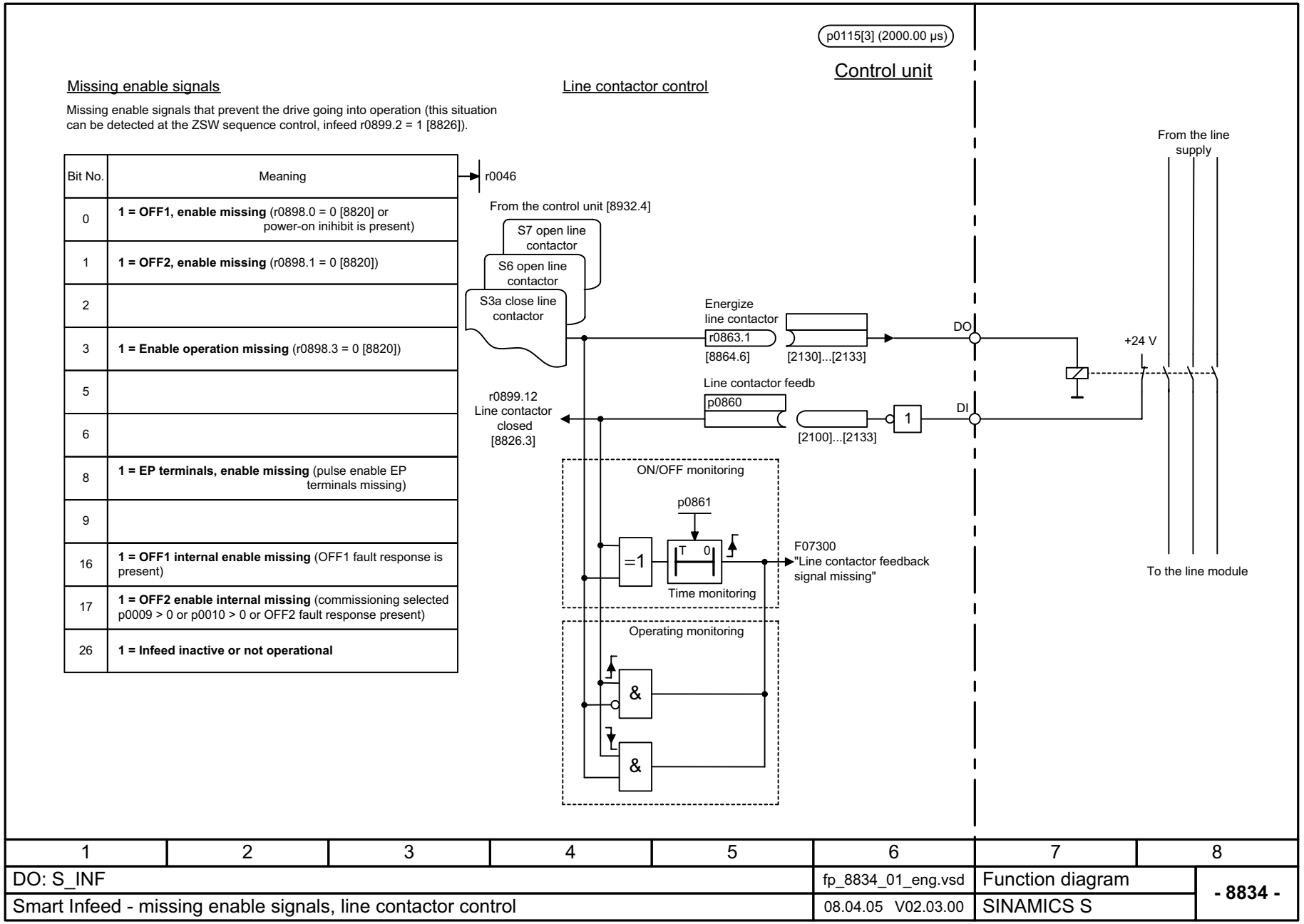

1	2	3	4	5	6	7	8
DO: S_INF					fp_8834_01_eng.vsd	Function diagram	- 8834 -
Smart Infeed - missing enable signals, line contactor control					08.04.05 V02.03.00	SINAMICS S	

Figure 2-168 8834 – Missing enable signals, line contactor control

© Siemens AG, 2005. All rights reserved
SINAMICS S List Manual, Edition 06.2005

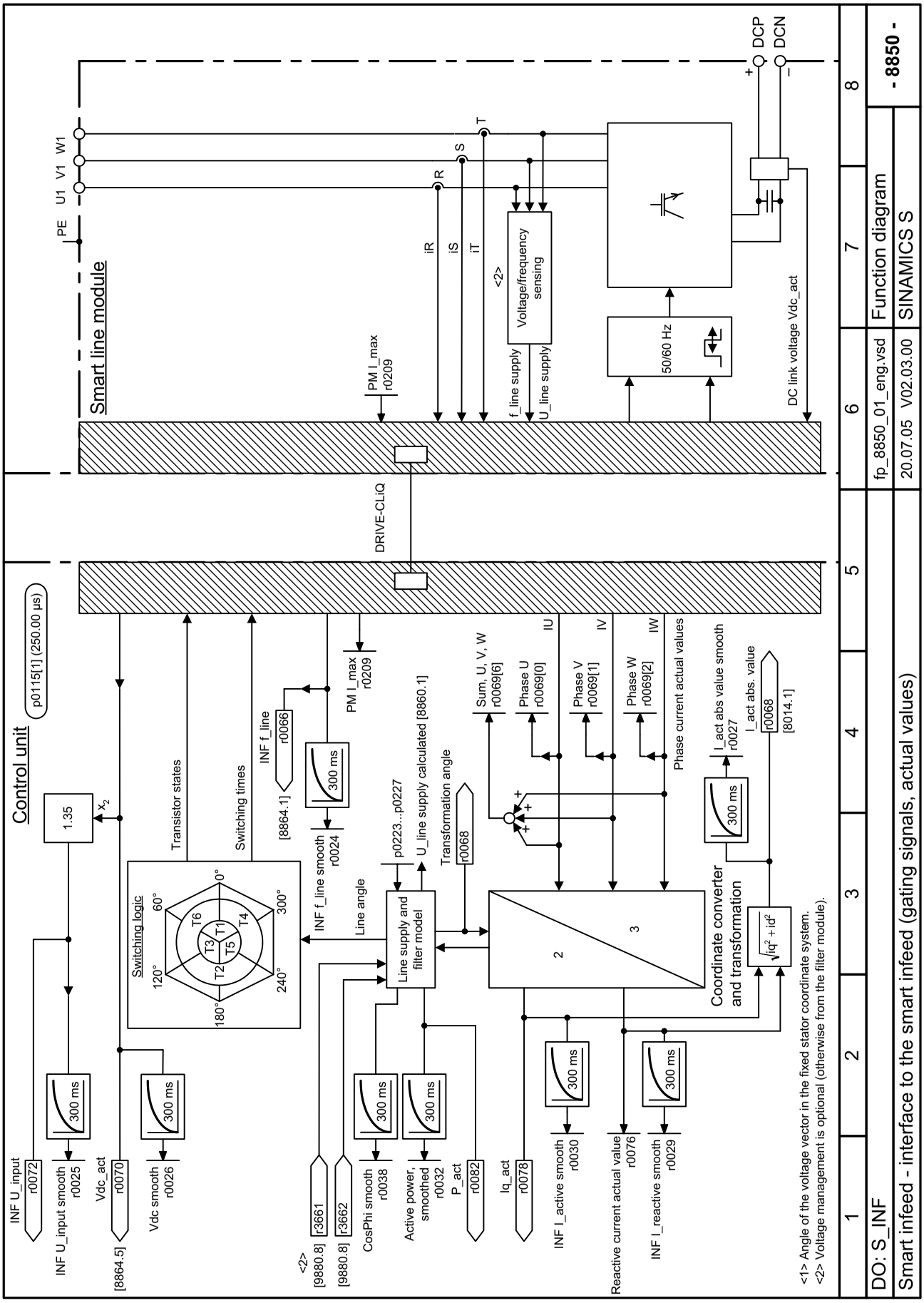

Figure 2-169 8850 – Interface to the Smart Infeed (control signals, actual values)

© Siemens AG, 2005. All rights reserved

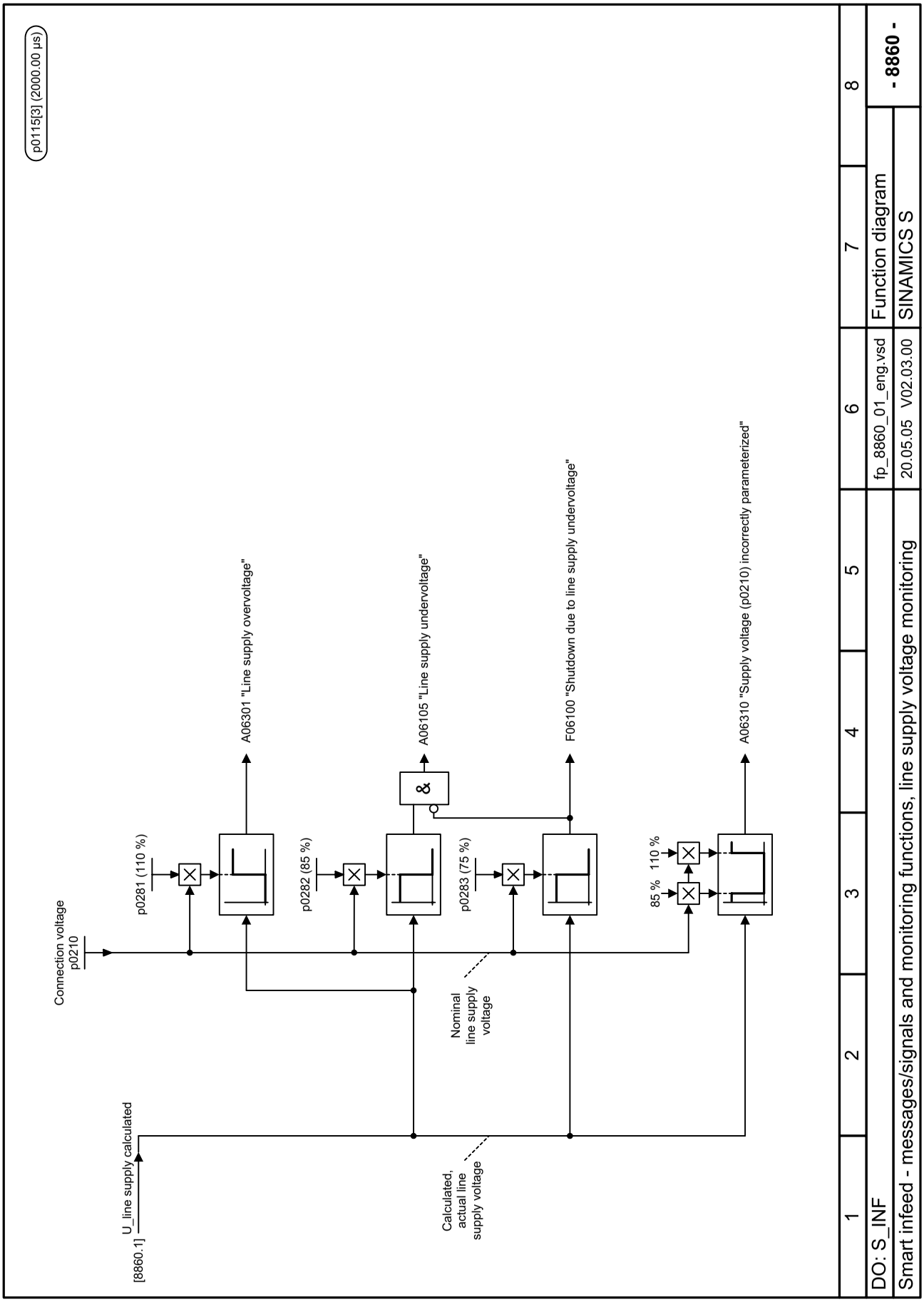

Figure 2-170 8860 – Messages and monitors, supply voltage monitor

© Siemens AG, 2005. All rights reserved

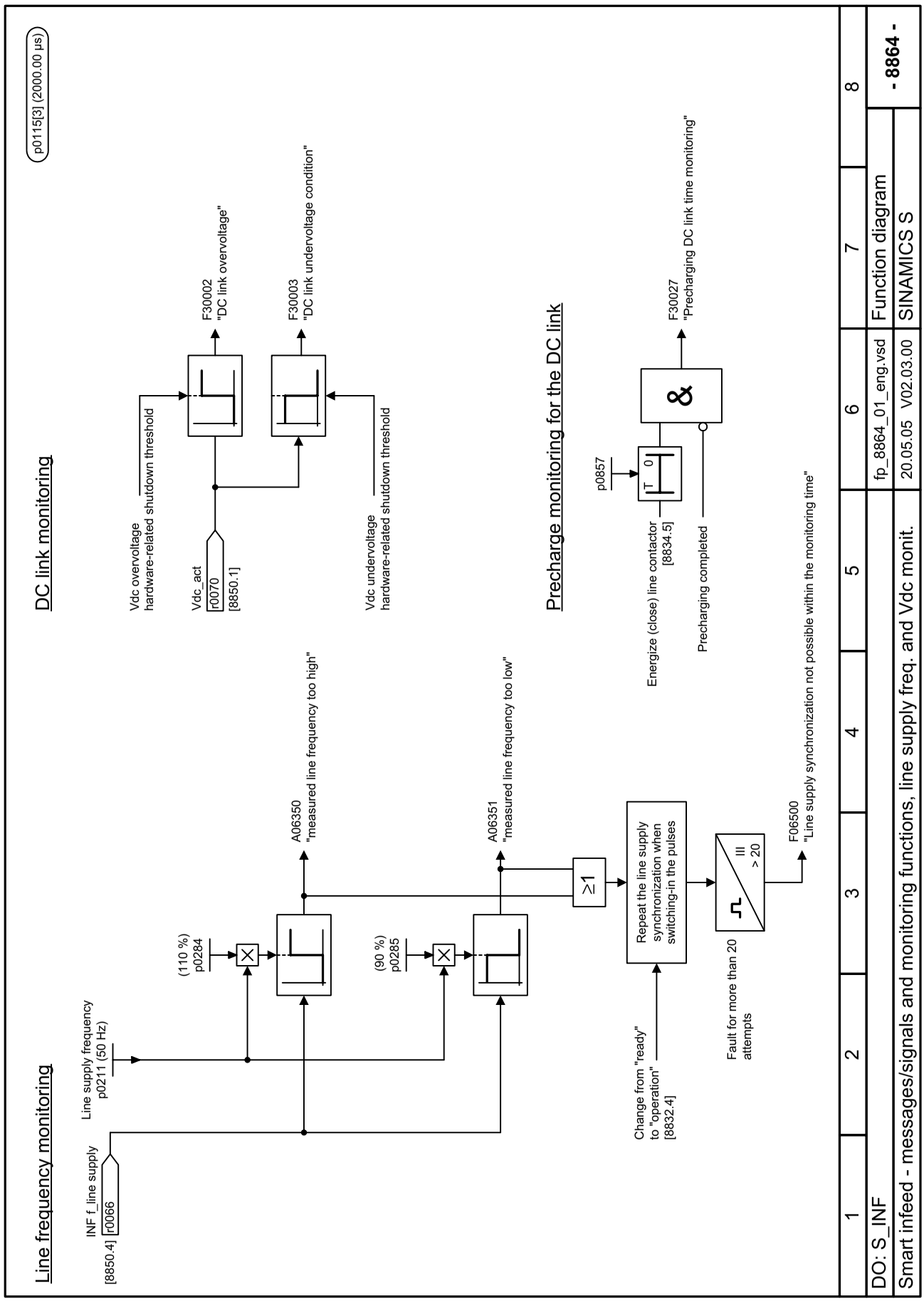

Figure 2-171 8864 – Messages and monitoring signals, line frequency and Vdc monitoring

© Siemens AG, 2005. All rights reserved

2.23 Active Infeed

Function diagrams

8920 – Control word sequential control infeed	2-912
8926 – Status word sequential control infeed	2-913
8928 – Status word infeed	2-914
8932 – Processor	2-915
8934 – Missing enable signals, line contactor control	2-916
8940 – Controller control factor reserve/controller DC link voltage	2-917
8946 – Current pre-control/current controller/gating unit	2-918
8950 – Interface to the Active Infeed (control signals, actual values)	2-919
8960 – Messages and monitors, supply voltage monitor	2-920
8964 – Messages and monitoring signals, line frequency and Vdc monitoring	2-921

© Siemens AG, 2005. All rights reserved

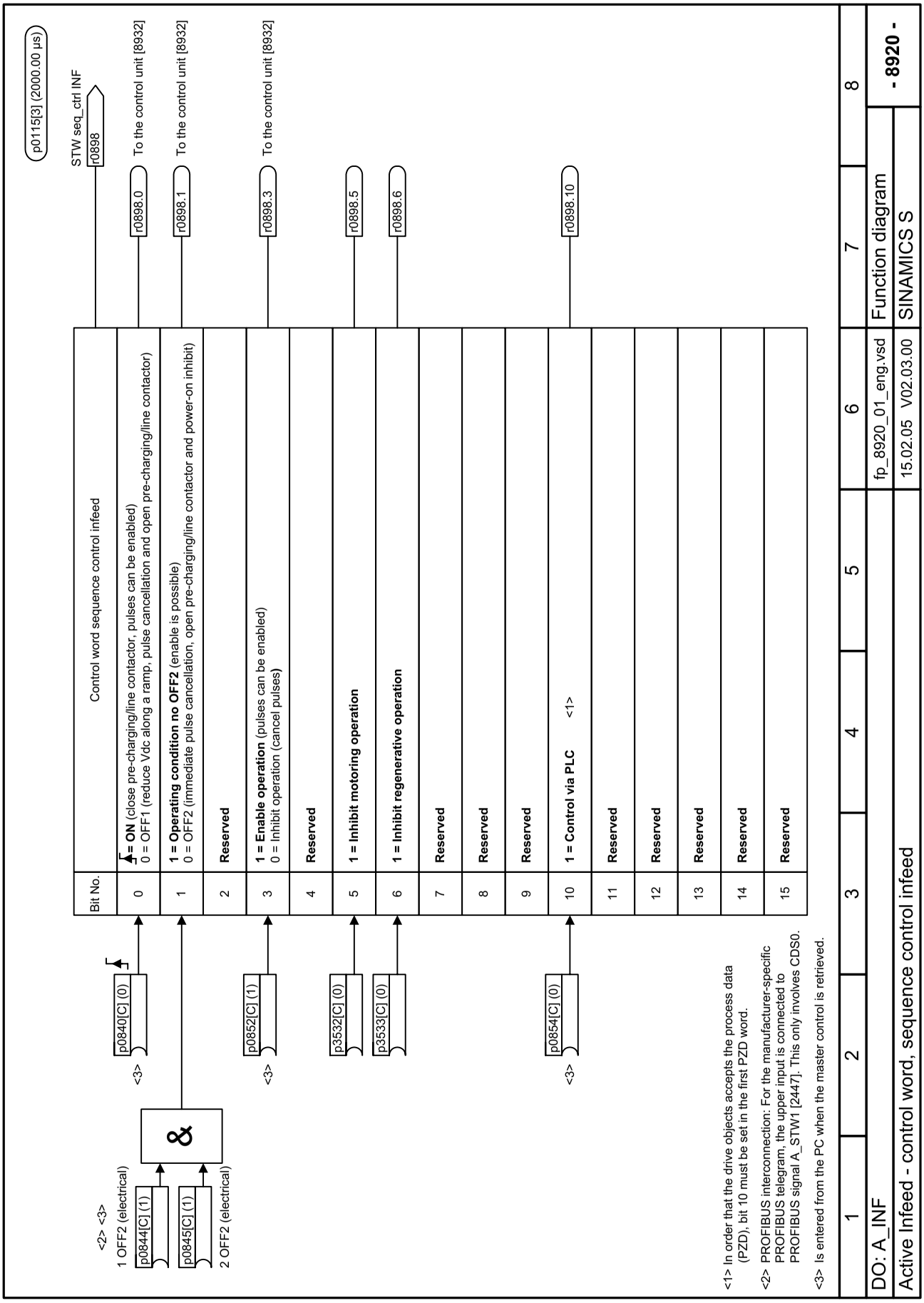

Figure 2-172 8920 – Control word sequential control infeed

© Siemens AG, 2005. All rights reserved
SINAMICS S List Manual, Edition 06.2005

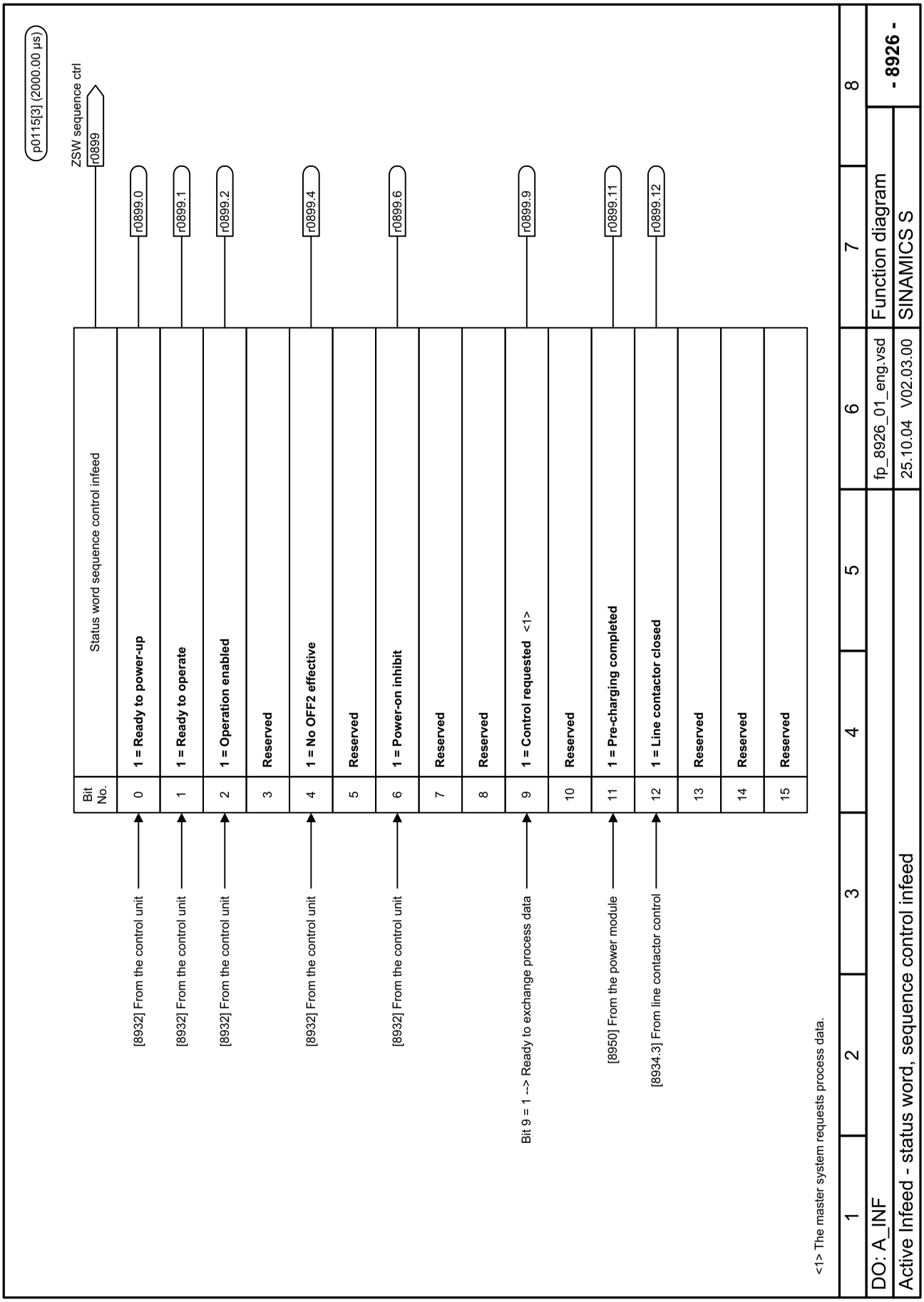

Figure 2-173 8926 – Status word sequential control infeed

© Siemens AG, 2005. All rights reserved

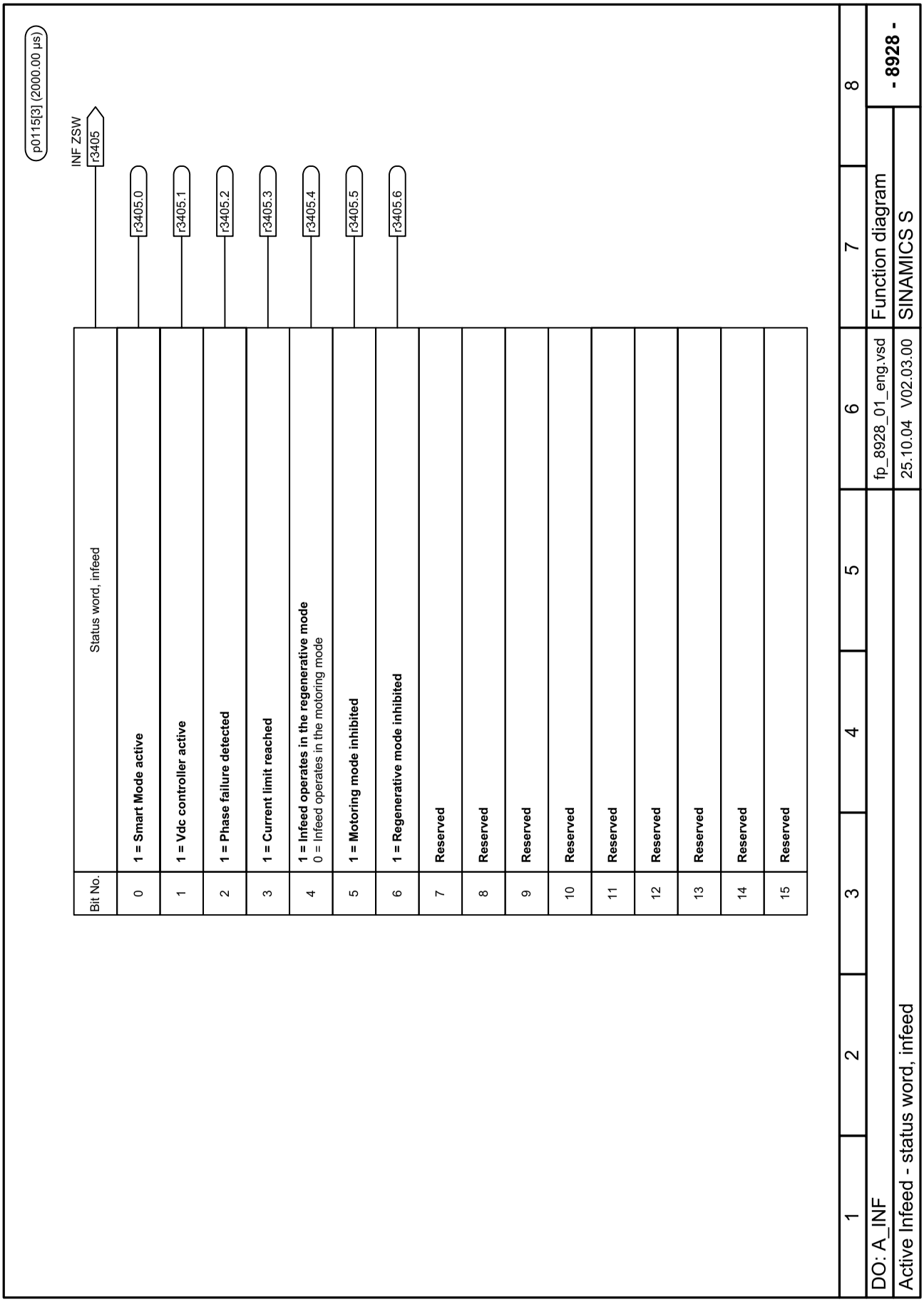

Figure 2-174 8928 – Status word infeed

© Siemens AG, 2005. All rights reserved
SINAMICS S List Manual, Edition 06.2005

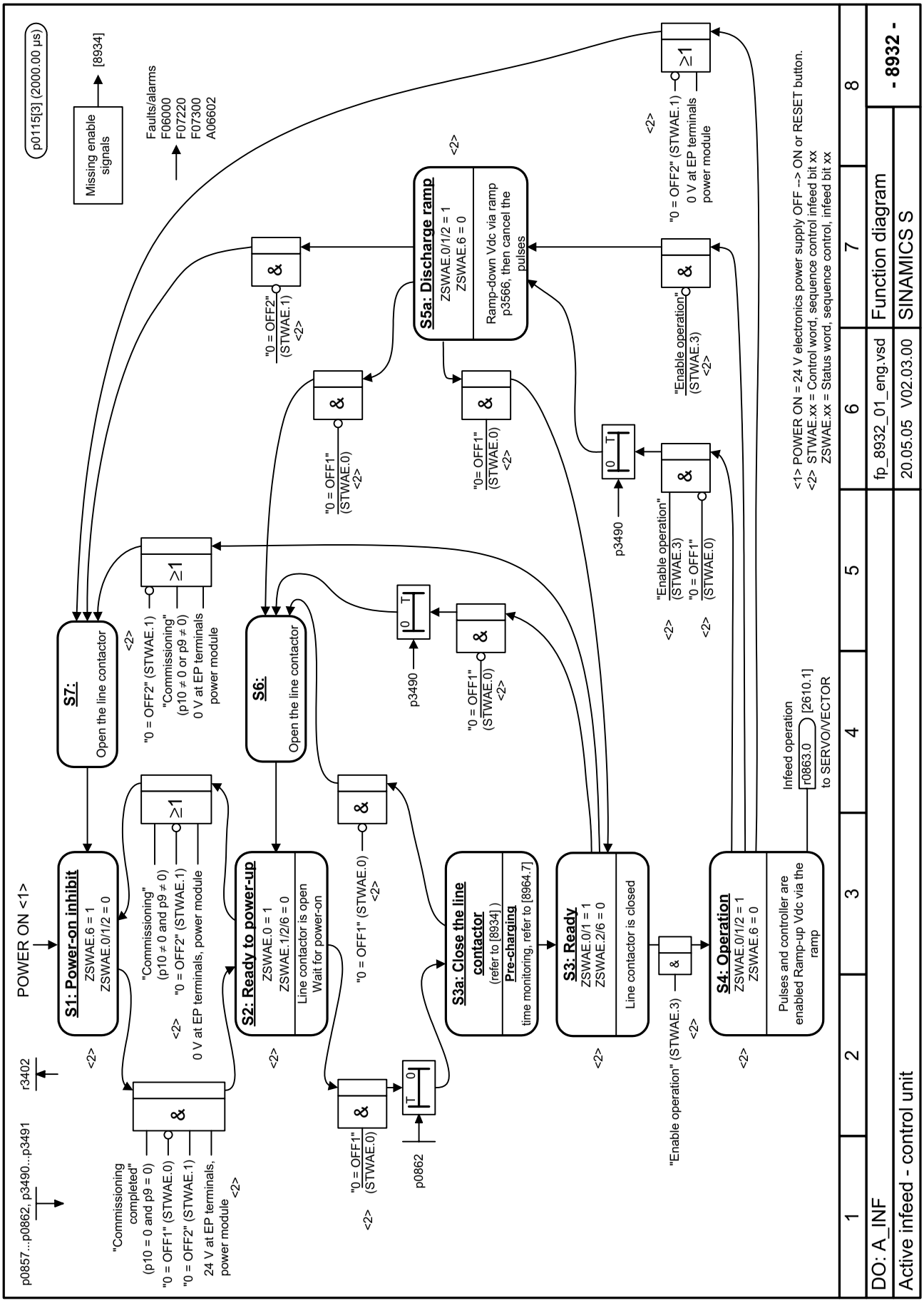

Figure 2-175 8932 – Processor

© Siemens AG, 2005. All rights reserved

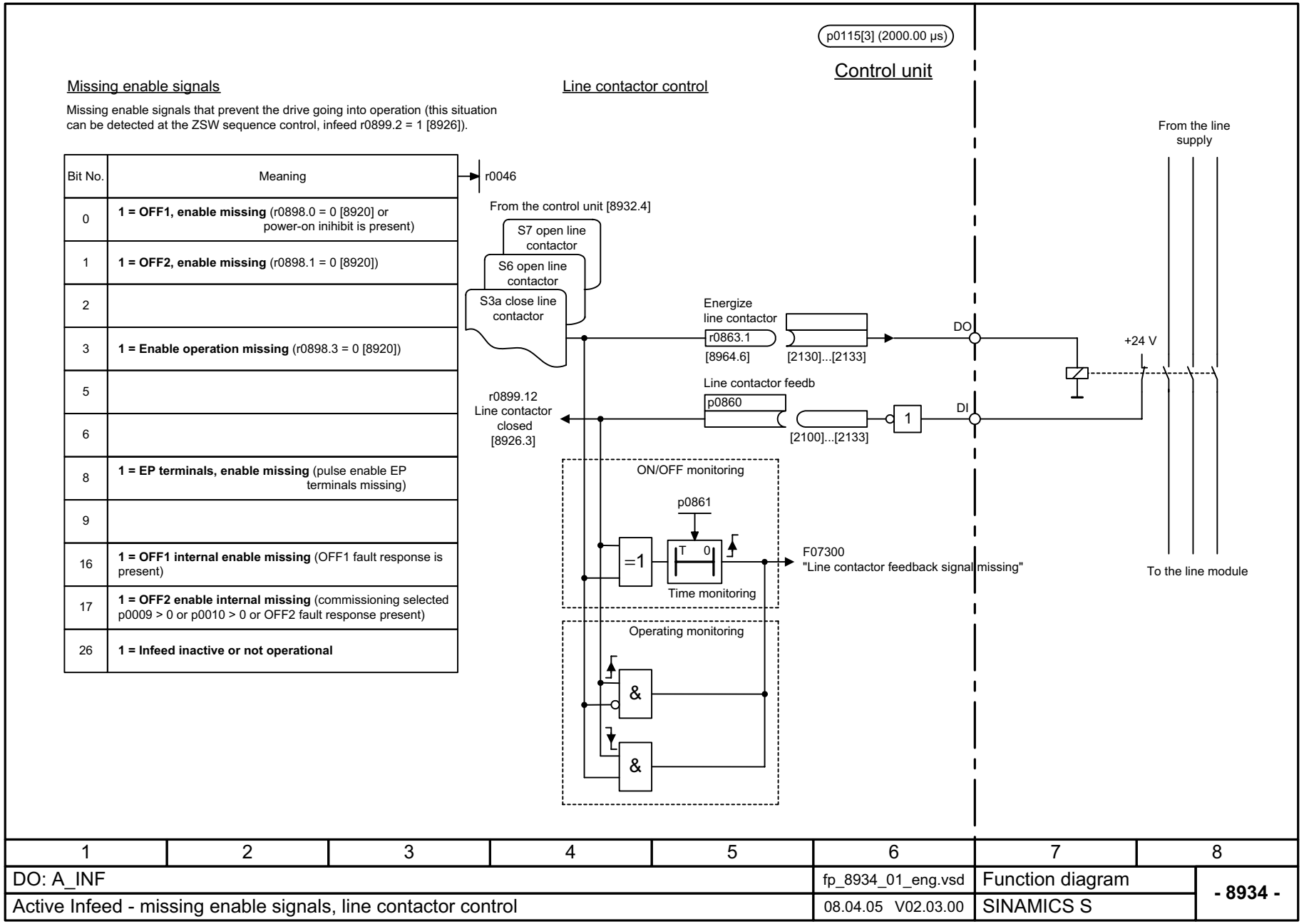

1	2	3	4	5	6	7	8
DO: A_INF					fp_8934_01_eng.vsd	Function diagram	- 8934 -
Active Infeed - missing enable signals, line contactor control					08.04.05 V02.03.00	SINAMICS S	

Figure 2-176 8934 – Missing enable signals, line contactor control

© Siemens AG, 2005. All rights reserved
SINAMICS S List Manual, Edition 06.2005

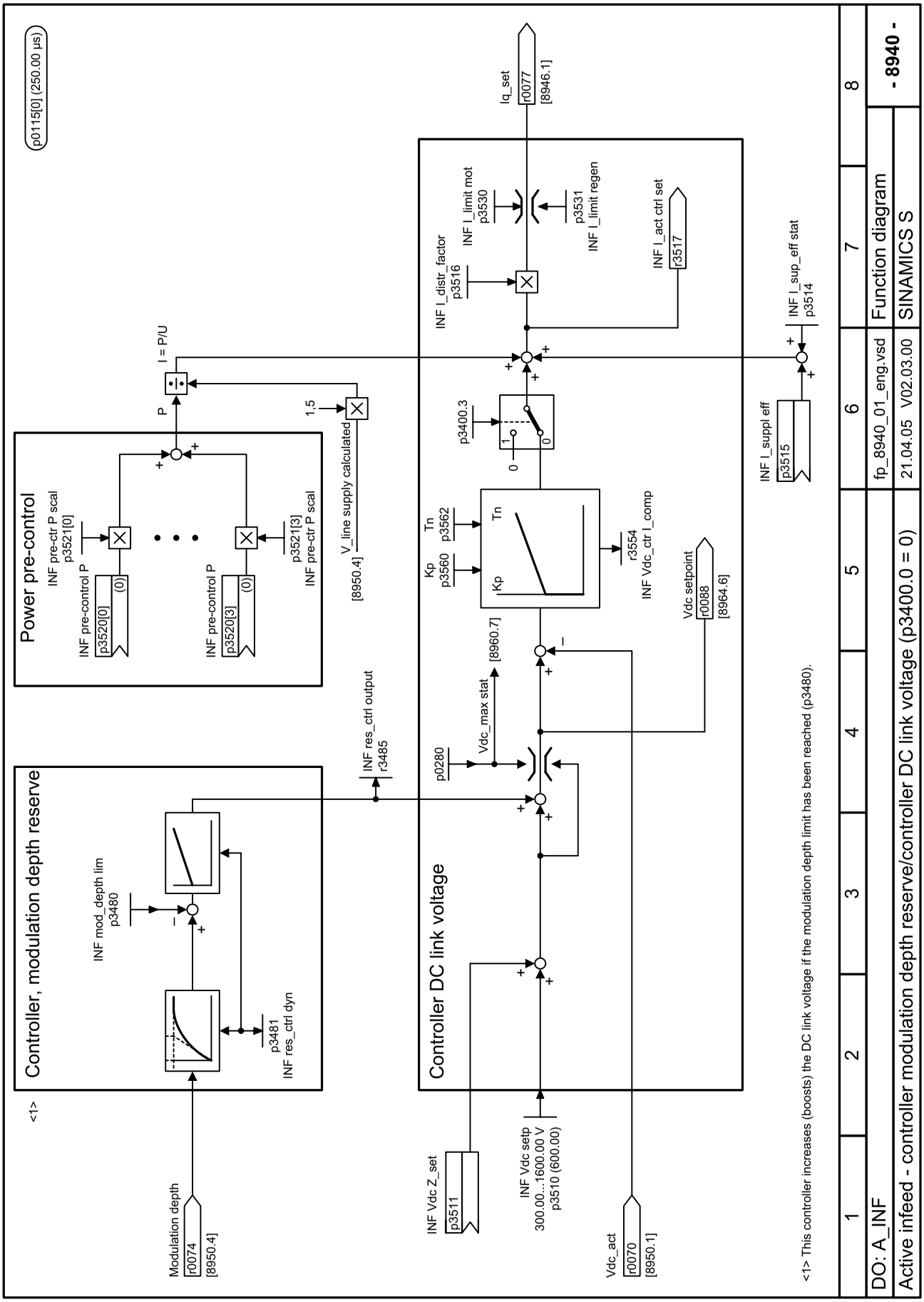

Figure 2-177 8940 – Controller control factor reserve/controller DC link voltage

© Siemens AG, 2005. All rights reserved

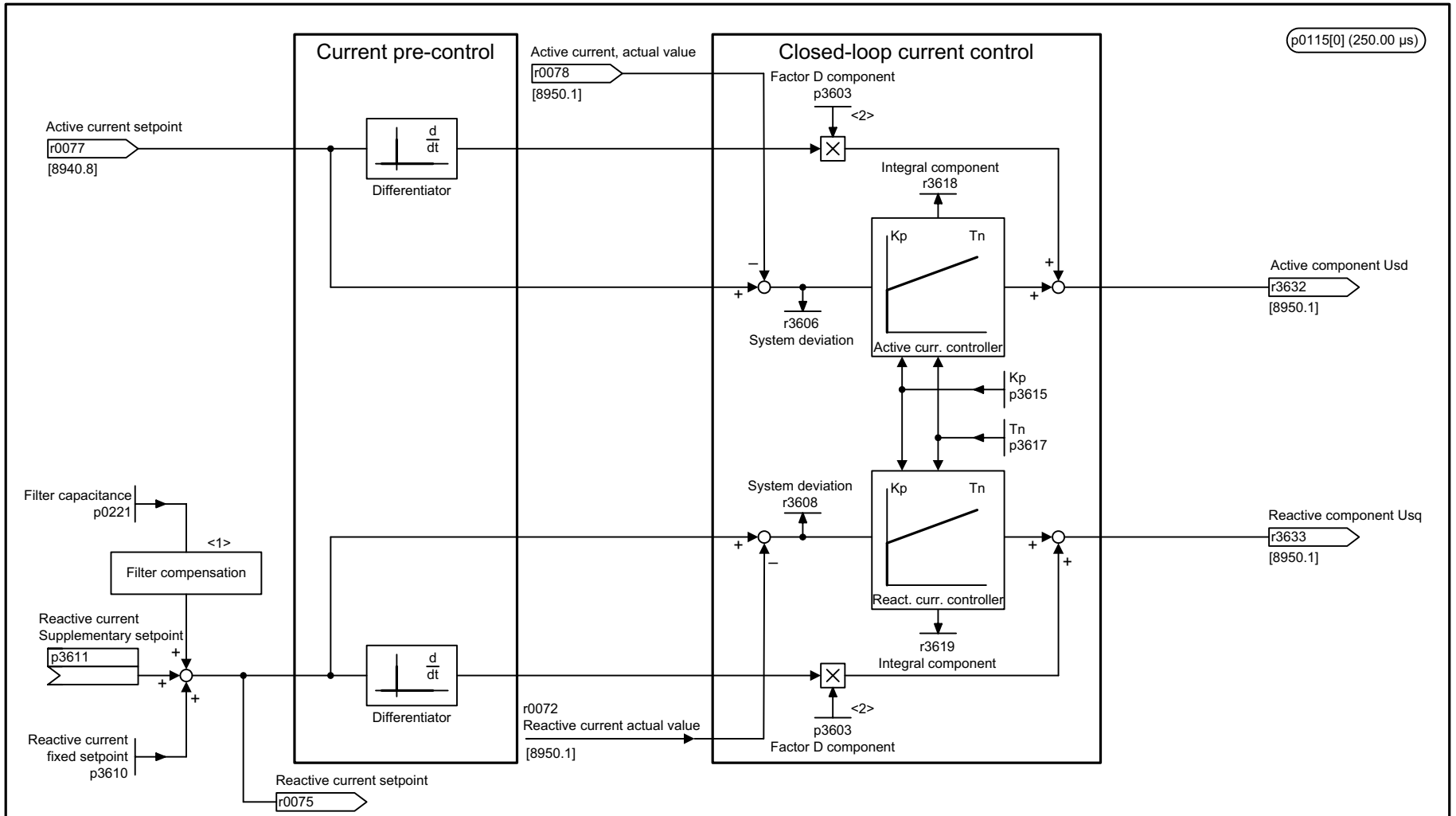

<1> Using the filter compensation, the reactive current requirement of a line filter is covered that is obtained dependent on the operating point as a result of its capacitance.This means that the reactive power is not taken from the line supply.
<2> For p3603 = 0 the D component is disabled.

1	2	3	4	5	6	7	8
DO: A_INF					fp_8946_01_eng.vsd	Function diagram	- 8946 -
Active infeed - power pre-control/current controller/gating unit (p3400.0 = 0)					20.05.05 V02.03.00	SINAMICS S	

Figure 2-178 8946 – Current pre-control/current controller/gating unit

© Siemens AG, 2005. All rights reserved
SINAMICS S List Manual, Edition 06.2005

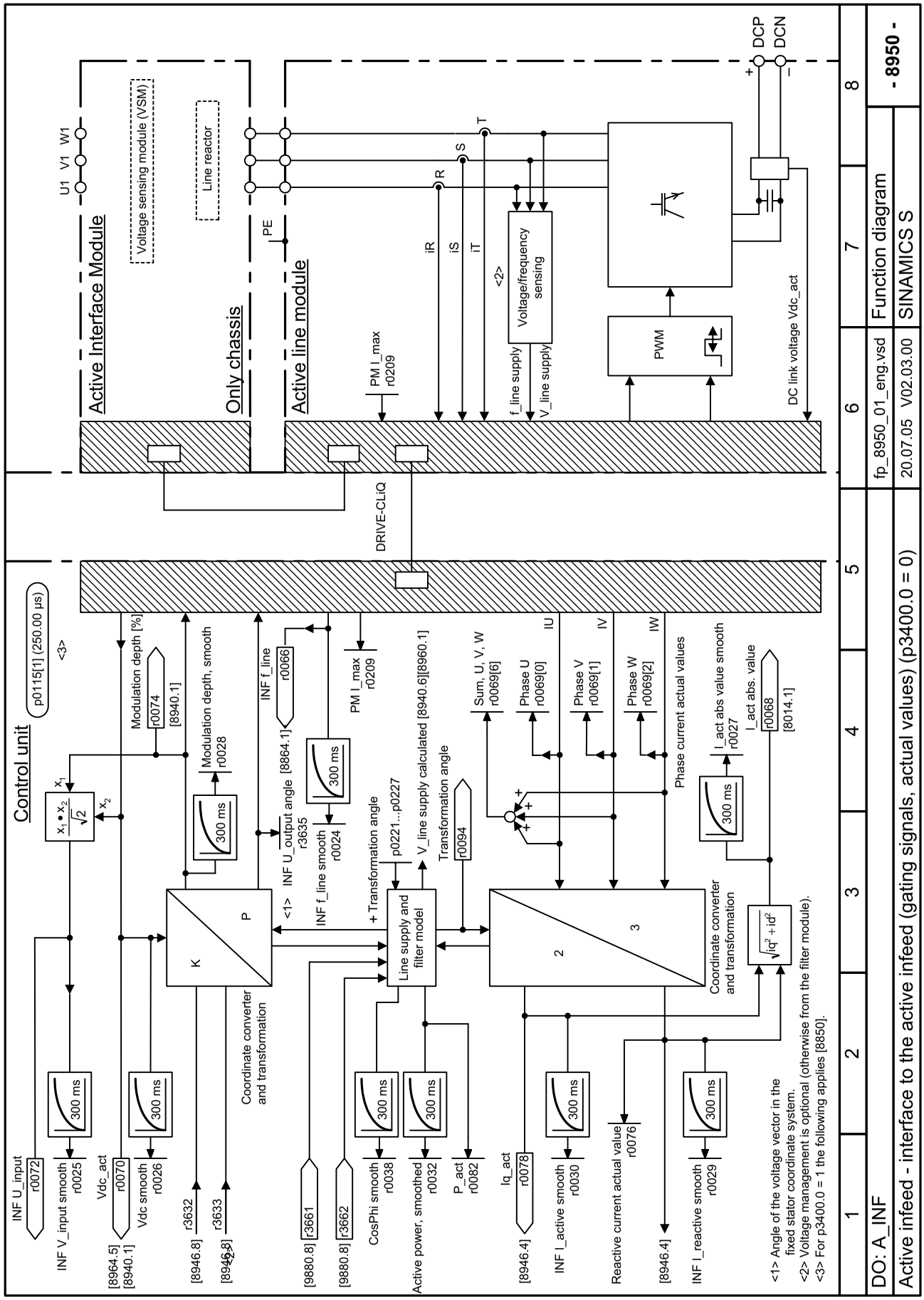

Figure 2-179 8950 – Interface to the Active Infeed (control signals, actual values)

© Siemens AG, 2005. All rights reserved

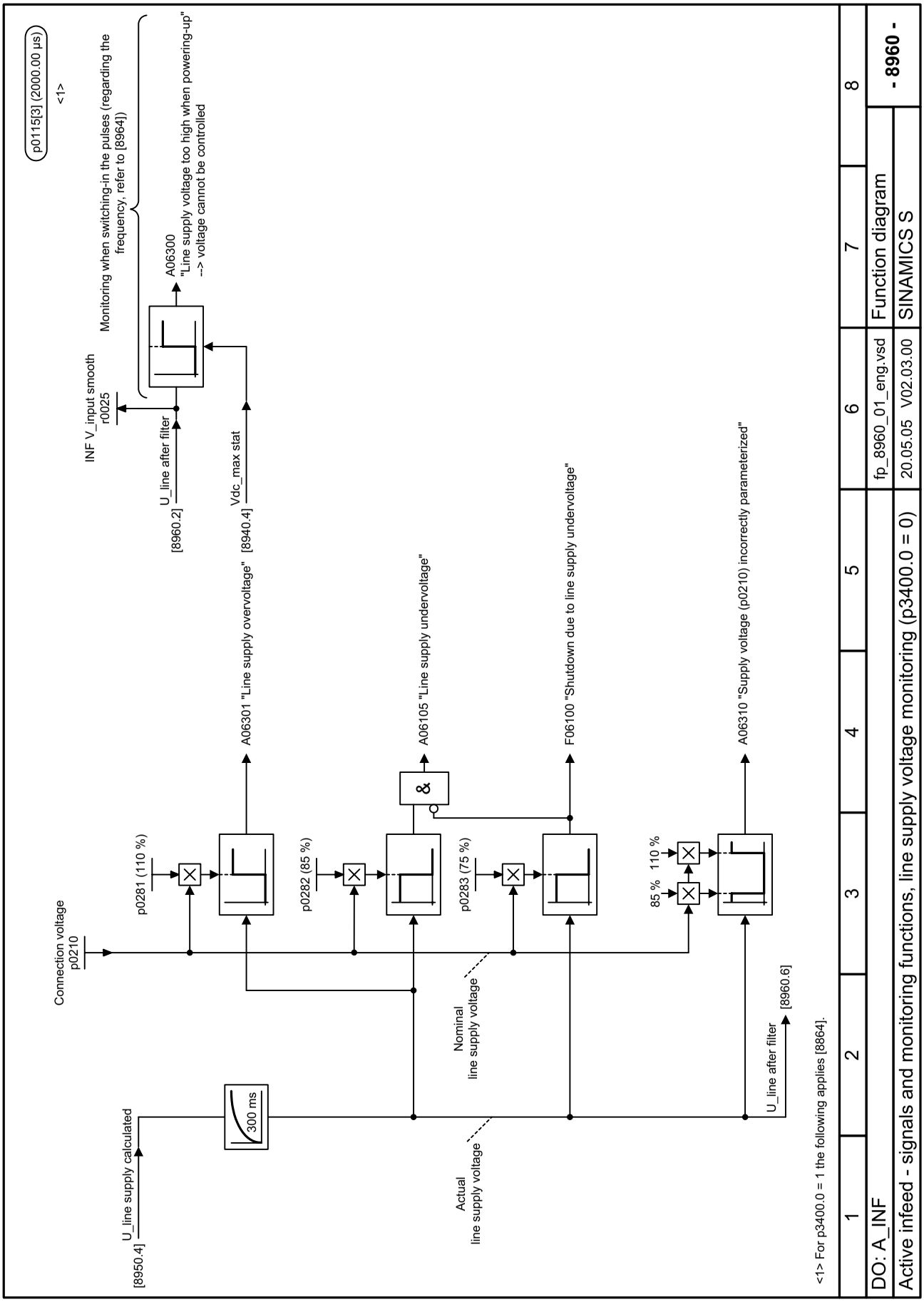

Figure 2-180 8960 – Messages and monitors, supply voltage monitor

© Siemens AG, 2005. All rights reserved

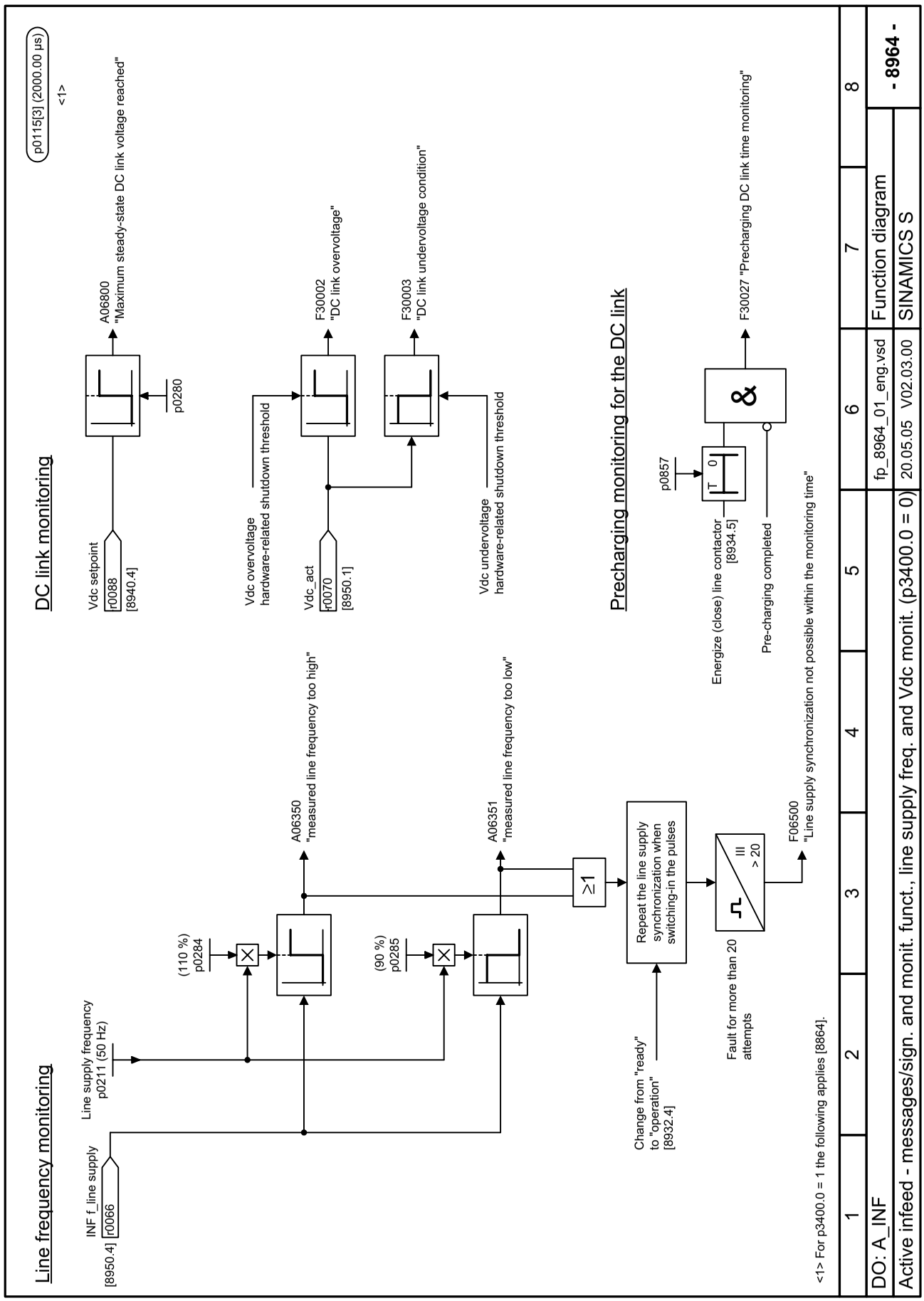

Figure 2-181 8964 – Messages and monitoring signals, line frequency and Vdc monitoring

© Siemens AG, 2005. All rights reserved

2.24 Terminal Board 30 (TB30)

Function diagrams

9100 – Digital inputs, electrically isolated (DI 0 ... DI 3)	2-923
9102 – Digital outputs, electrically isolated (DO 0 ... DO 3)	2-924
9104 – Analog inputs (AI 0 ... AI 1)	2-925
9106 – Analog outputs (AO 0 ... AO 1)	2-926

© Siemens AG, 2005. All rights reserved

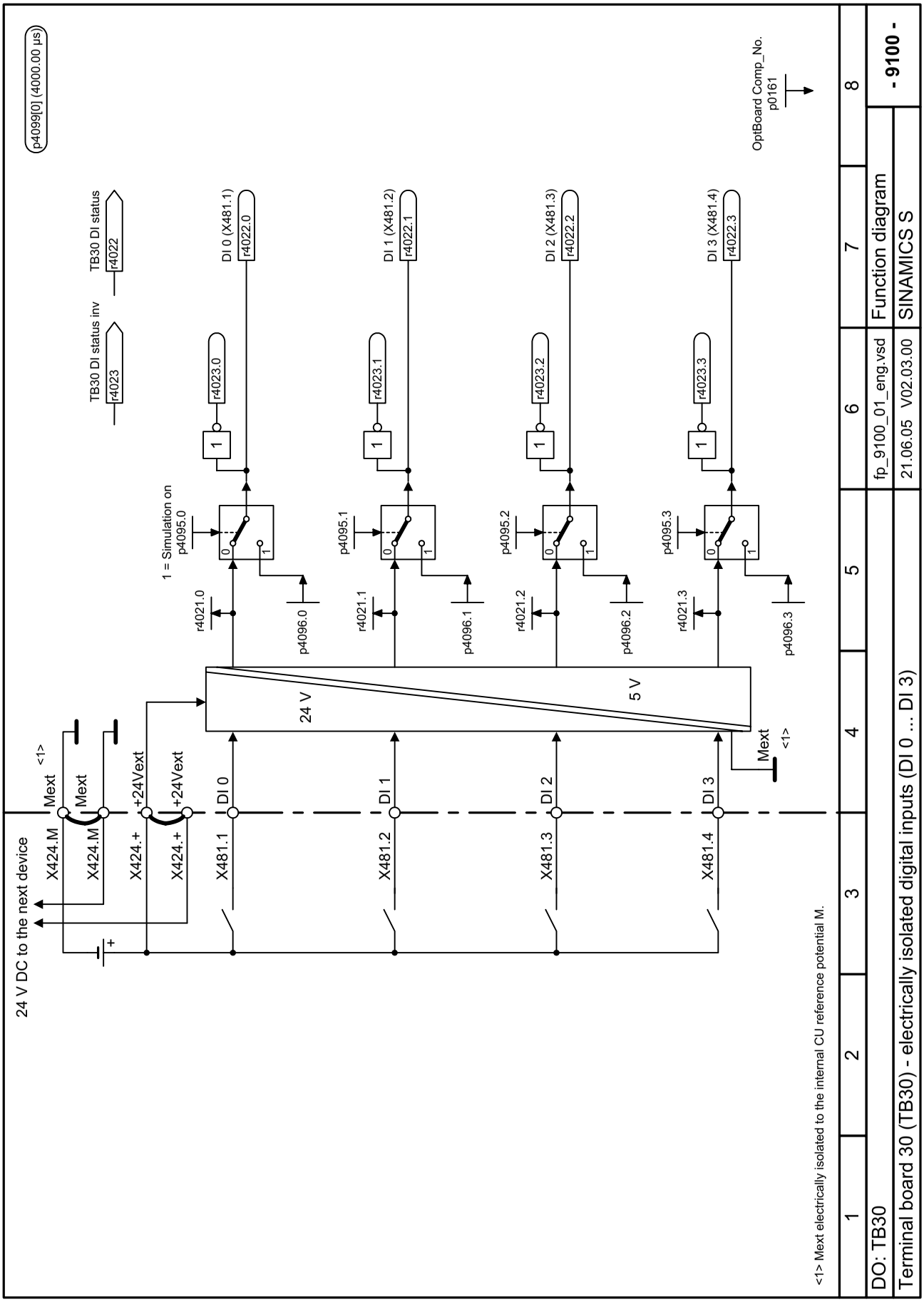

Figure 2-182 9100 – Digital inputs, electrically isolated (DI 0 ... DI 3)

© Siemens AG, 2005. All rights reserved

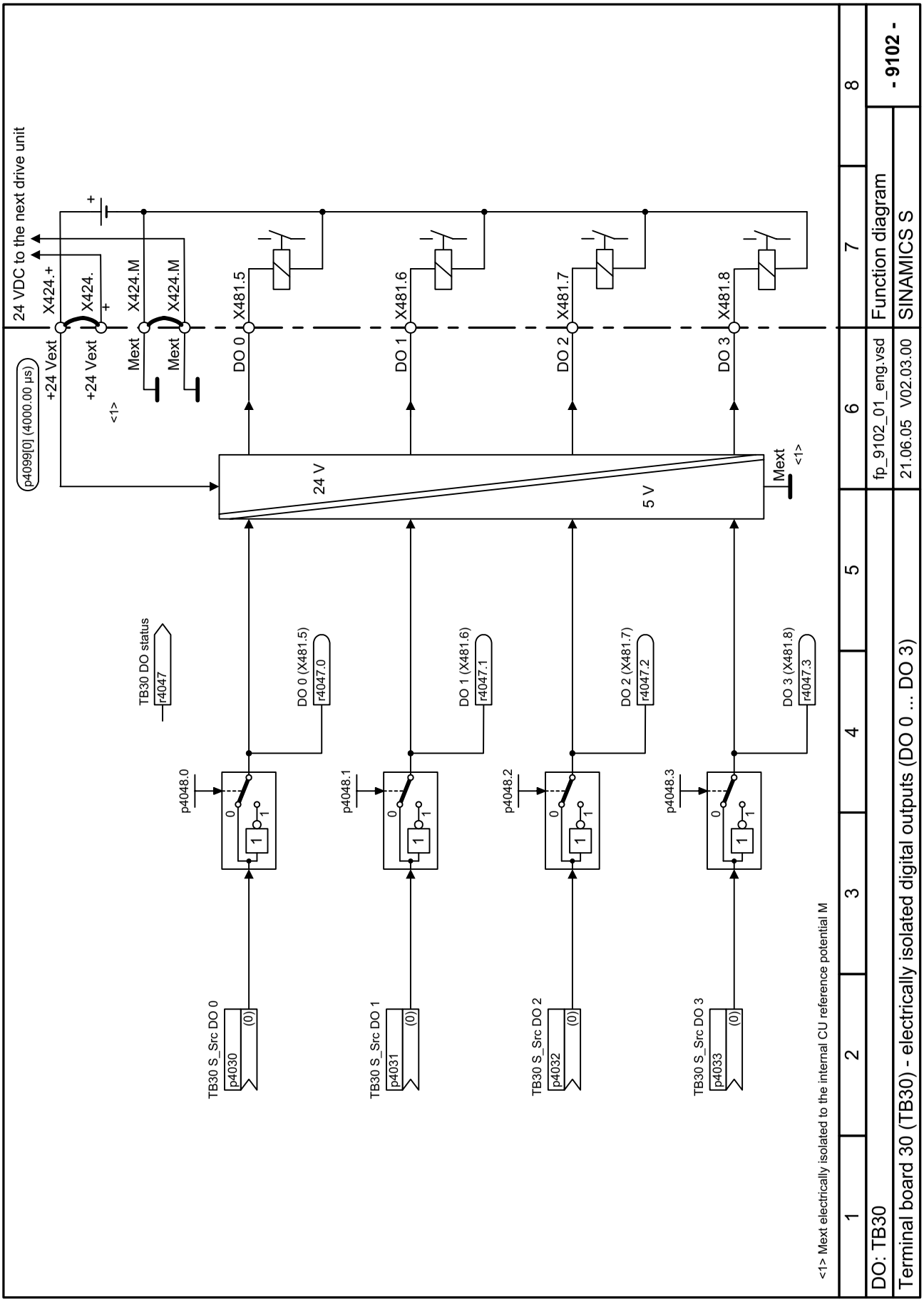

Figure 2-183 9102 – Digital outputs, electrically isolated (DO 0 ... DO 3)

© Siemens AG, 2005. All rights reserved

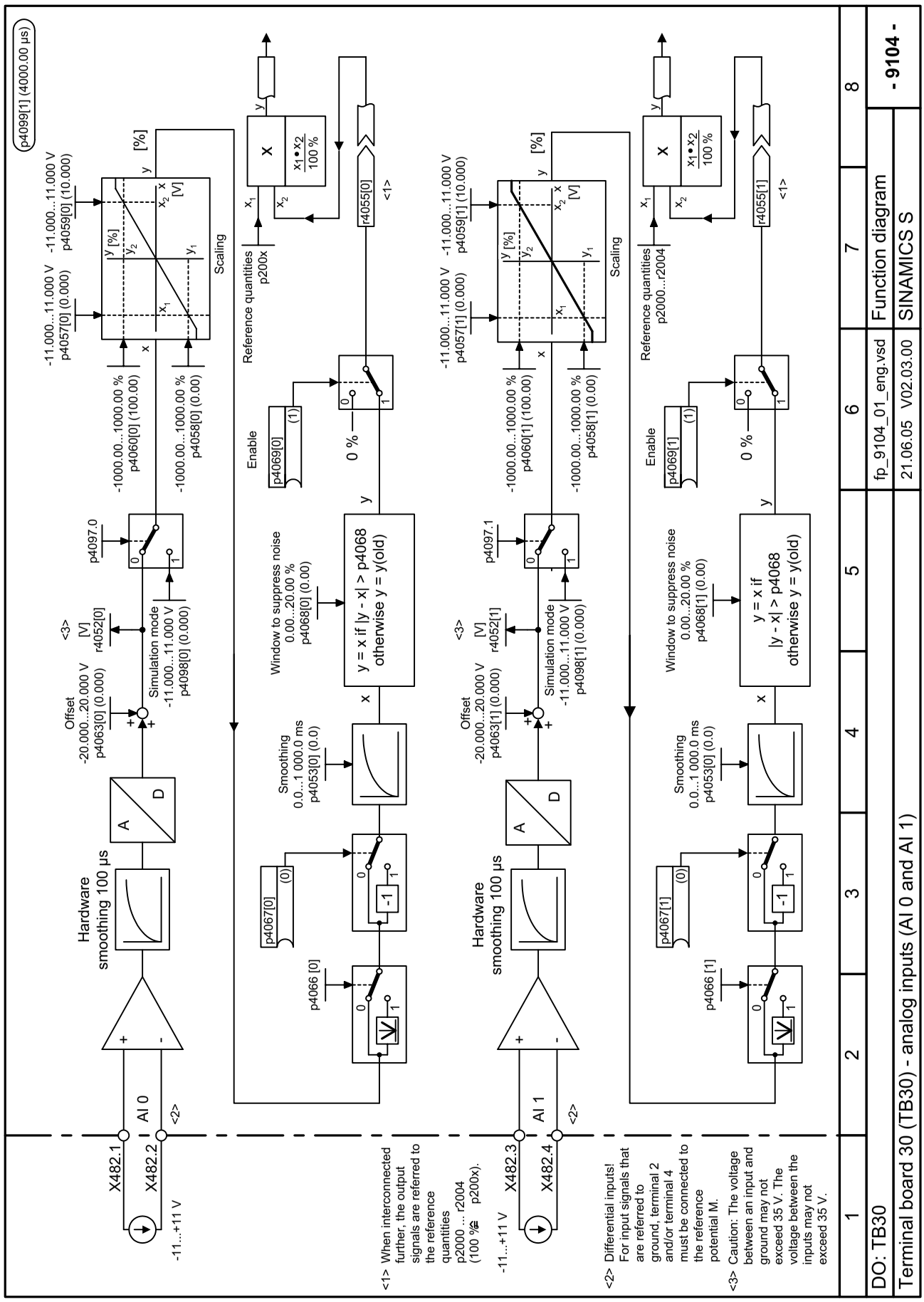

Figure 2-184 9104 – Analog inputs (AI 0 ... AI 1)

© Siemens AG, 2005. All rights reserved

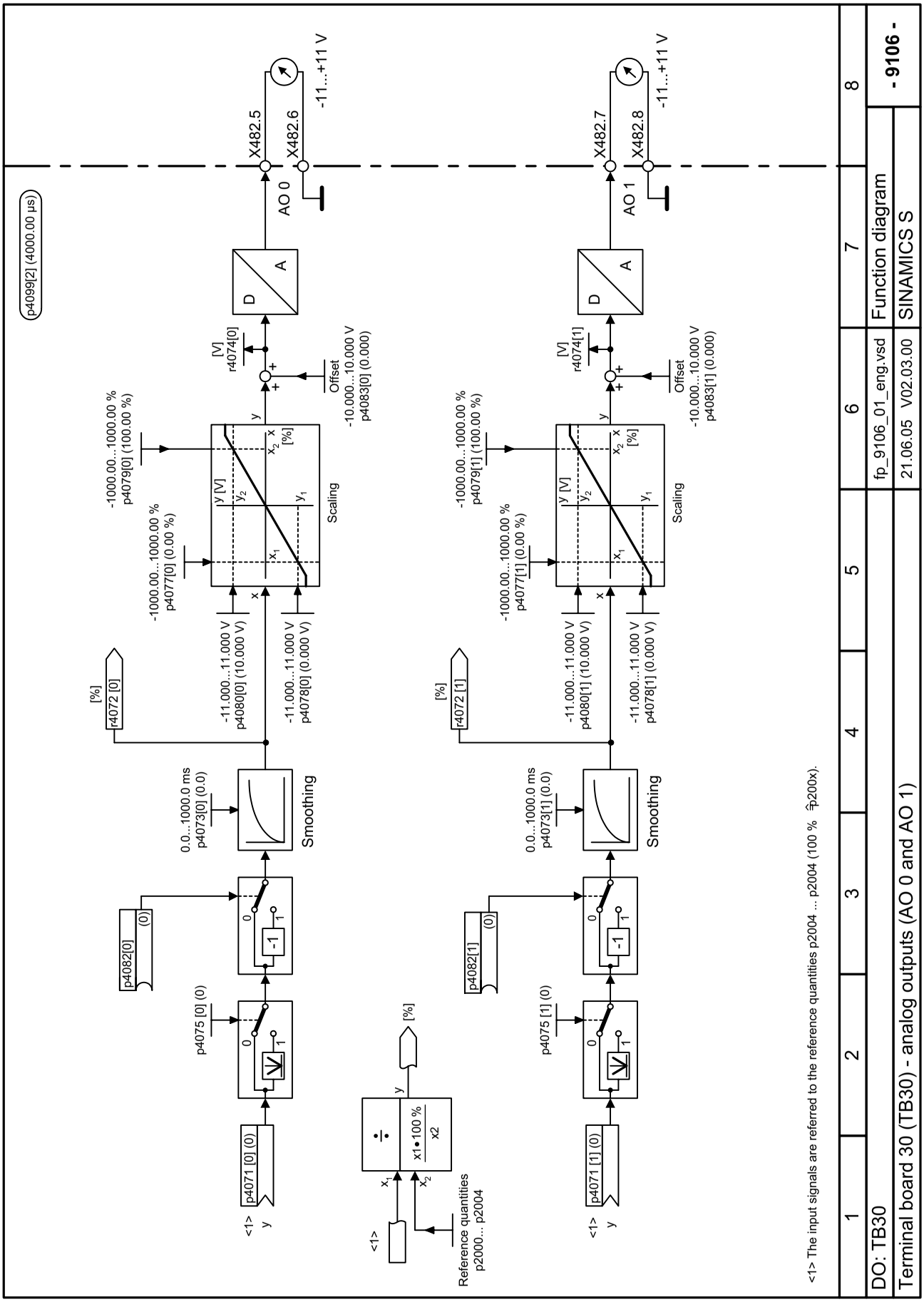

Figure 2-185 9106 – Analog outputs (AO 0 ... AO 1)

© Siemens AG, 2005. All rights reserved

2.25 Communication Board CAN 10 (CBC10)

Function diagrams

9204 – Receive message frame, free PDO mapping (p8744 = 2)	2-928
9206 – Receive message frame, predefined connection set (p8744 = 1)	2-929
9208 – Send message frame, free PDO mapping (p8744 = 2)	2-930
9210 – Send message frame, predefined connection set (p8744 = 1)	2-931
9220 – Control word CANopen	2-932
9226 – Status word CANopen	2-933

© Siemens AG, 2005. All rights reserved

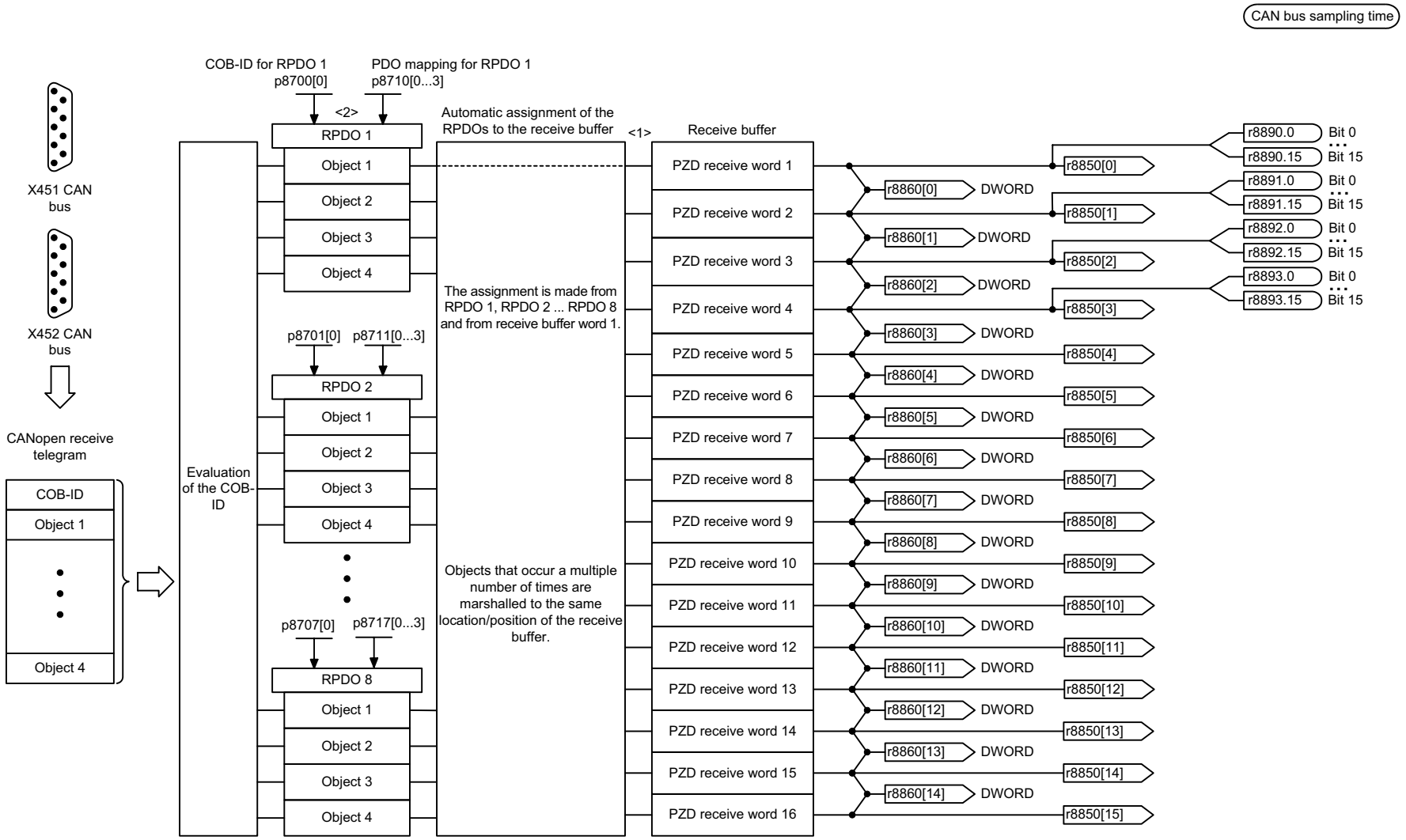

<1> To use the automatic BICO interconnection (p8790 = 1), receive word 1 must be used as control word 1 (STW1).
<2> Telegram, maximum of 4 words, or 64 bits

RPDO: Receive Process Data Object
COB-ID: CAN Object Identification

1	2	3	4	5	6	7	8
DO: SERVO					fp_9204_01_eng.vsd	Function diagram	- 9204 -
Communication board CAN 10 (CBC10) - receive telegram free PDO mapping. (p8744 = 2)					13.05.04 V02.03.00	SINAMICS S	

Figure 2-186 9204 – Receive message frame, free PDO mapping (p8744 = 2)

© Siemens AG, 2005. All rights reserved
SINAMICS S List Manual, Edition 06.2005

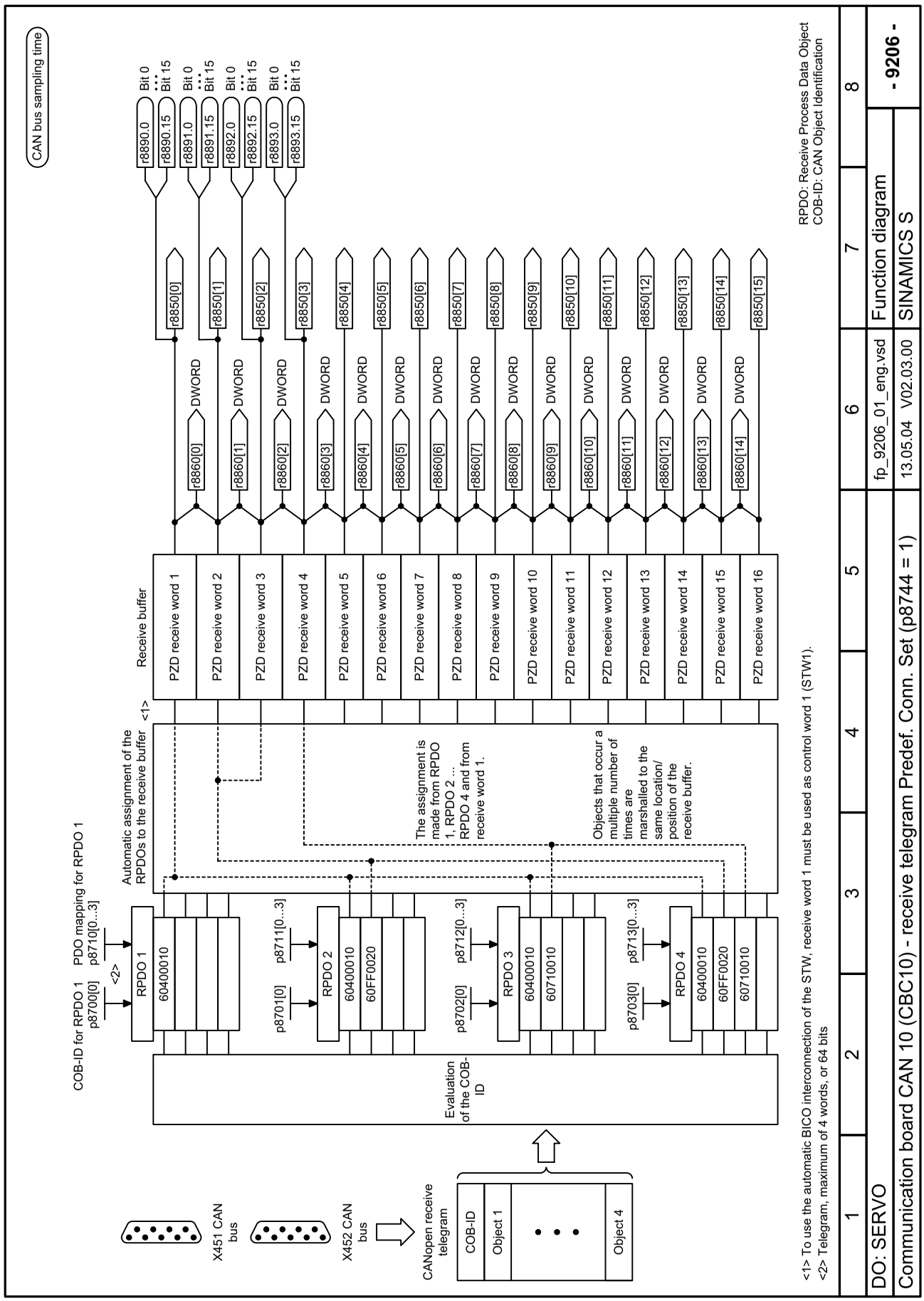

Figure 2-187 9206 – Receive message frame, predefined connection set (p8744 = 1)

© Siemens AG, 2005. All rights reserved

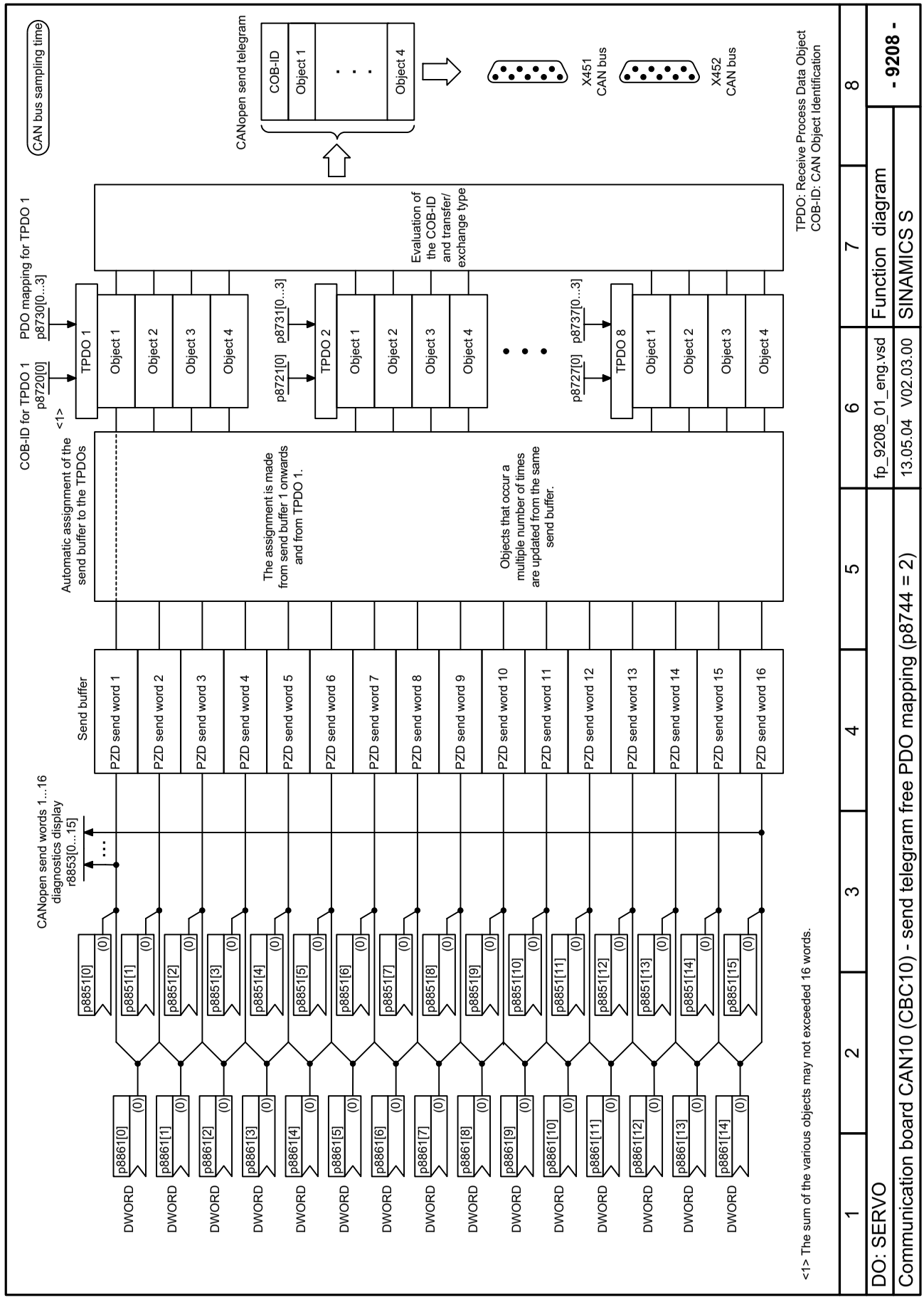

Figure 2-188 9208 – Send message frame, free PDO mapping (p8744 = 2)

© Siemens AG, 2005. All rights reserved

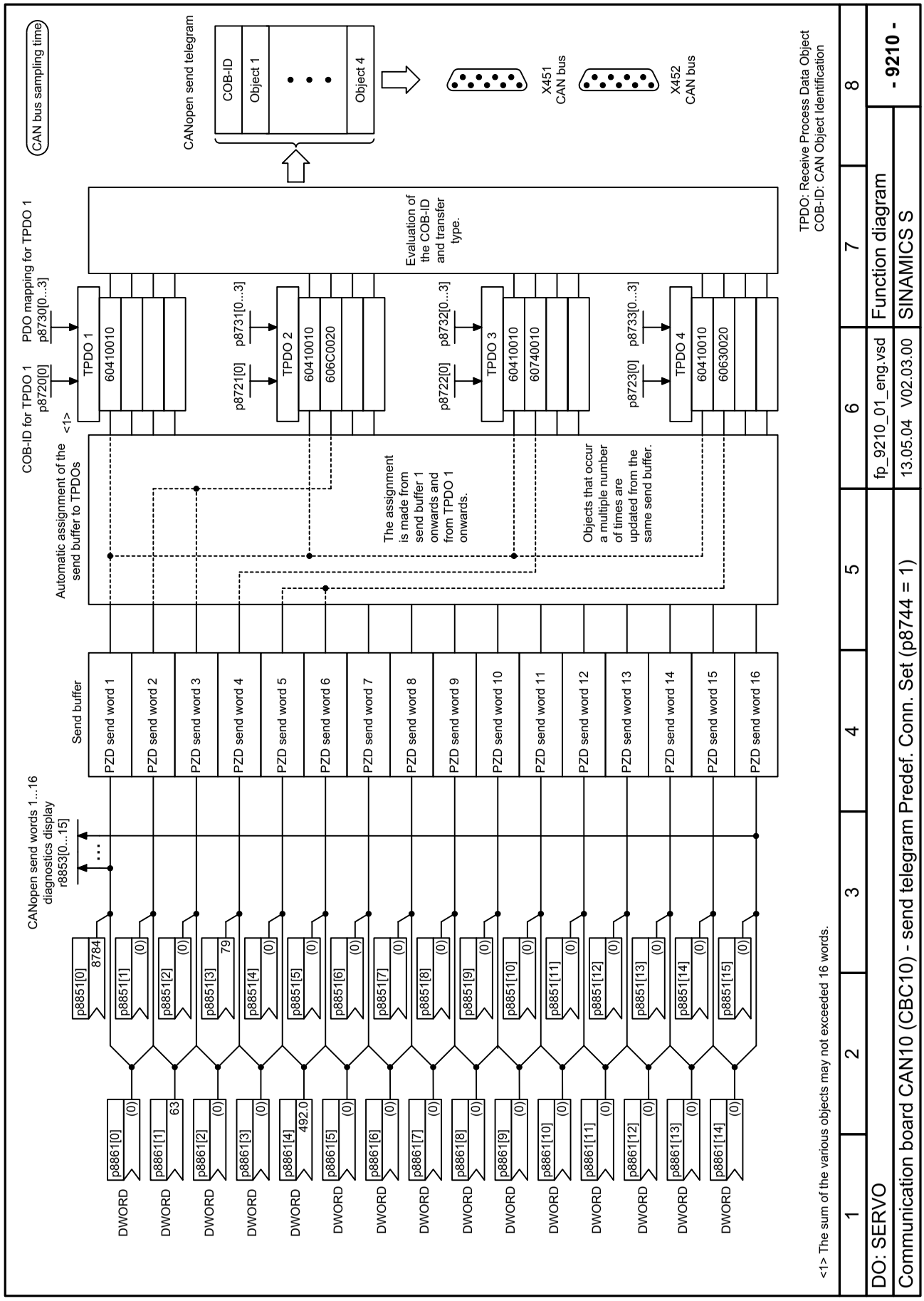

Figure 2-189 9210 – Send message frame, predefined connection set (p8744 = 1)

© Siemens AG, 2005. All rights reserved

CANopen sampling time
Refer to [1020.7]

Signal targets for control word CANopen

Signal	Meaning	Interconnection parameters <1>	[Function diagram] internal control word	[Function diagram] signal target	Inverted
STW1.0	↑ = ON (pulses can be enabled) **0 = OFF1** (braking with ramp-function generator, then pulse cancellation and ready-to-power-up)	p0840[0] = r8890.0	[2501.3]	[2610]	-
STW1.1	**1 = No coasting active** (enable is possible) 0 = Coasting active (immediate pulse cancellation and power-on inhibit)	p0844[0] = r8890.1	[2501.3]	[2610]	-
STW1.2	**1 = No fast stop active** (enable possible) 0 = Fast stop active (braking with the OFF3 ramp p1135, then pulse cancellation and power-on inhibit)	p0848[0] = r8890.2	[2501.3]	[2610]	-
STW1.3	**1 = Enable operation** (pulses can be enabled) 0 = Inhibit operation (cancel pulses)	p0852[0] = r8890.3	[2501.3]	[2610]	-
STW1.4	**Reserved**	-	-	-	-
STW1.5	**Reserved**	-	-	-	-
STW1.6	**Reserved**	-	-	-	-
STW1.7	↑ **= Acknowledge fault**	p2103[0] = r8890.7	[2546.1]	[8060]	-
STW1.8	**Reserved**	-	-	-	-
STW1.9	**Reserved**	-	-	-	-
STW1.10	**Reserved**	-			-
STW1.11	**Can be freely connected**	pxxxx[y] = r8890.11			-
STW1.12	**Can be freely connected**	pxxxx[y] = r8890.12	-	-	-
STW1.13	**Can be freely connected**	pxxxx[y] = r8890.13	-	-	-
STW1.14	**Can be freely connected**	pxxxx[y] = r8890.14	-	-	-
STW1.15	**Can be freely connected**	pxxxx[y] = r8890.15	-	-	-

<1> Depending on the position of the CANopen-control word in p8750, the number of the binector to be connected changes.

Figure 2-190 9220 – Control word CANopen

1	2	3	4	5	6	7	8
DO: SERVO					fp_9220_01_eng.vsd	Function diagram	- 9220 -
Communication board CAN 10 (CBC10) - control word CANopen					22.06.05 V02.03.00	SINAMICS S	

© Siemens AG, 2005. All rights reserved
SINAMICS S List Manual, Edition 06.2005

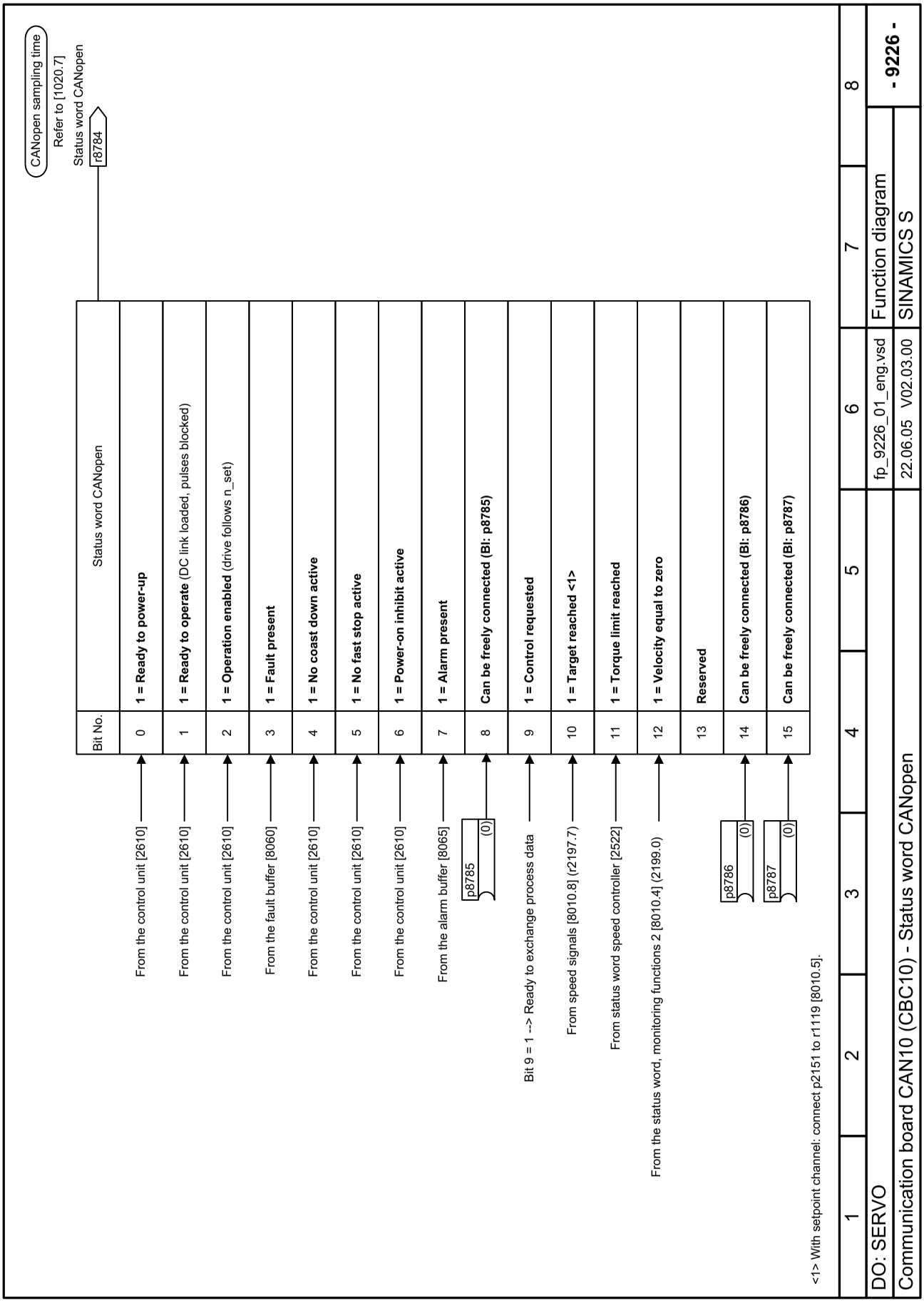

Figure 2-191 9226 – Status word CANopen

© Siemens AG, 2005. All rights reserved

2.26 Terminal Module 15 for SINAMICS (TM15DI/DO)

Function diagrams

9400 – Digital inputs/outputs, bi-directional (DI/DO 0 ... DI/DO 7)	2-935
9401 – Digital inputs/outputs, bi-directional (DI/DO 8 ... DI/DO 15)	2-936
9402 – Digital inputs/outputs, bi-directional (DI/DO 16 ... DI/DO 23)	2-937

© Siemens AG, 2005. All rights reserved

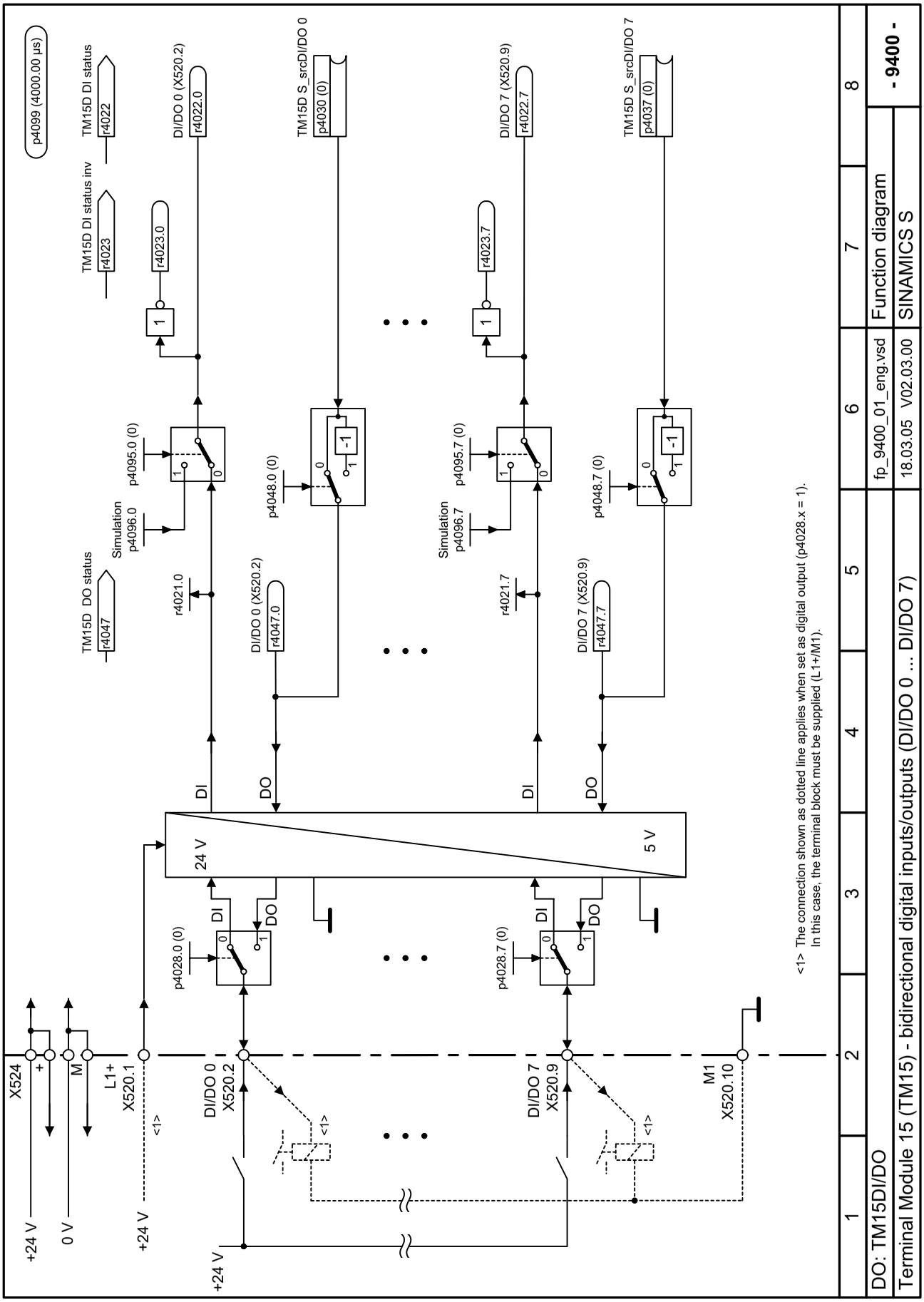

Figure 2-192 9400 – Digital inputs/outputs, bi-directional (DI/DO 0 ... DI/DO 7)

© Siemens AG, 2005. All rights reserved

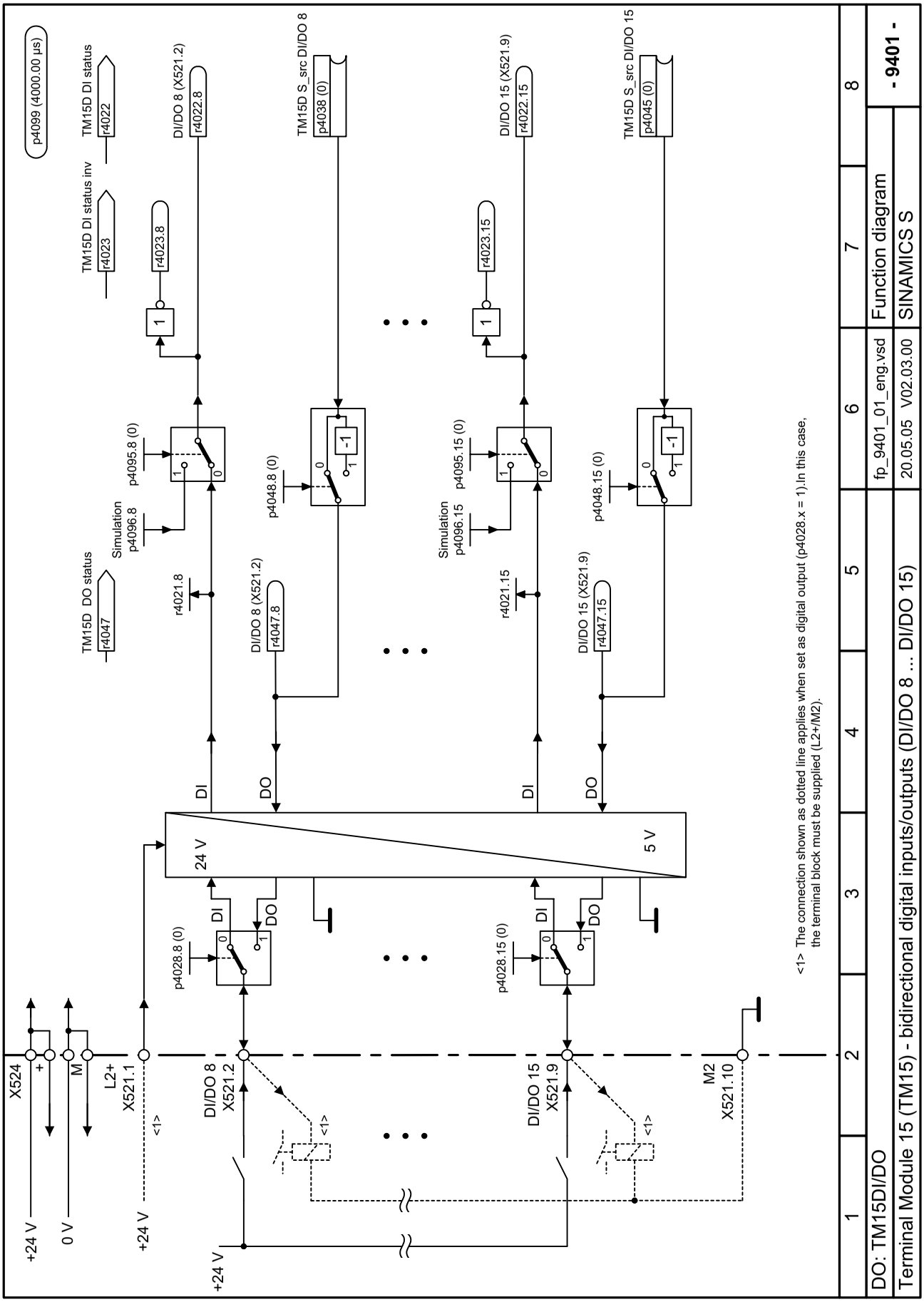

Figure 2-193 9401 – Digital inputs/outputs, bi-directional (DI/DO 8 ... DI/DO 15)

© Siemens AG, 2005. All rights reserved
SINAMICS S List Manual, Edition 06.2005

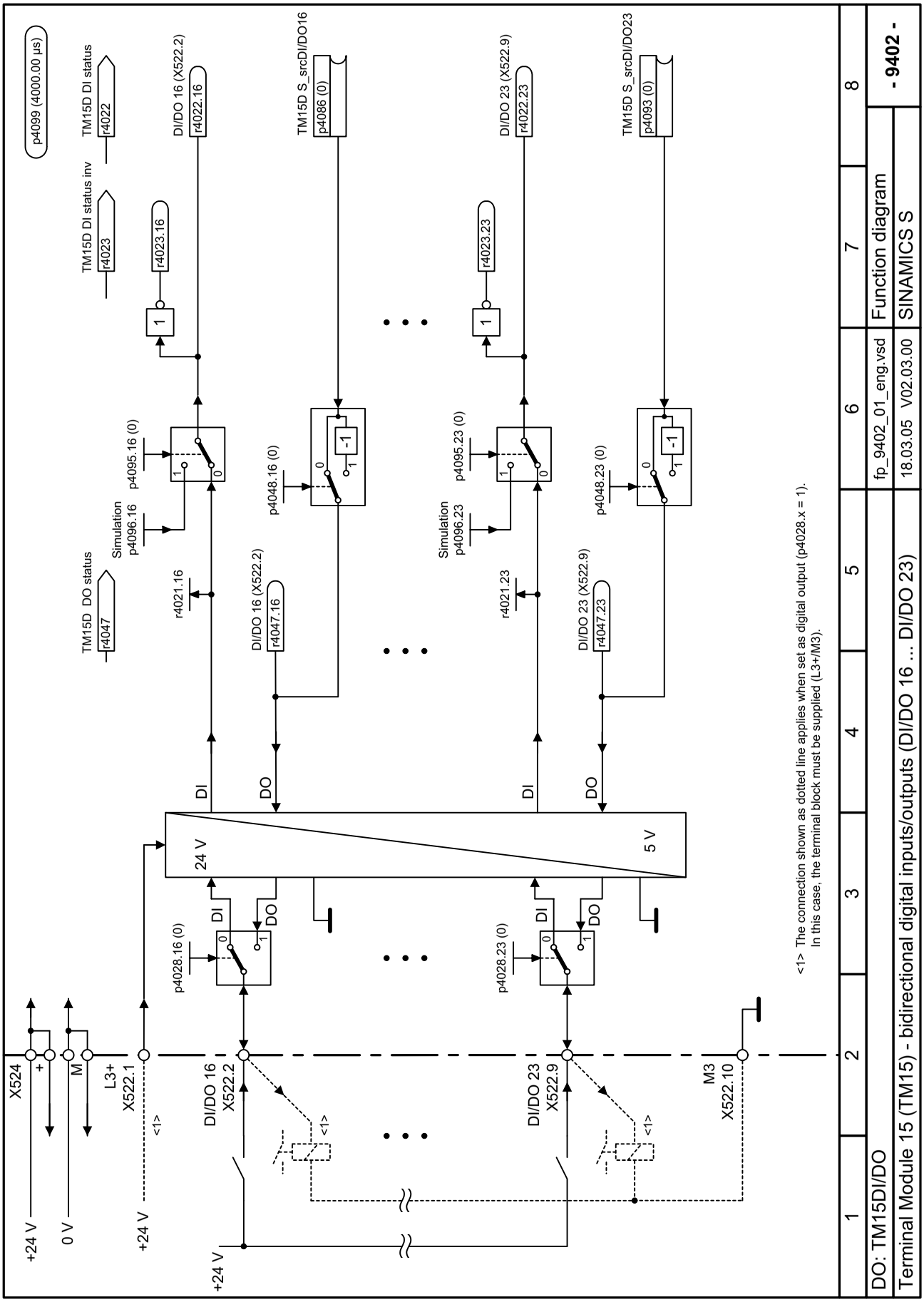

Figure 2-194 9402 – Digital inputs/outputs, bi-directional (DI/DO 16 ... DI/DO 23)

© Siemens AG, 2005. All rights reserved

2.27 Terminal Module 31 (TM31)

Function diagrams

9550 – Digital inputs, electrically isolated (DI 0 ... DI 3)	2-939
9552 – Digital inputs, electrically isolated (DI 4 ... DI 7)	2-940
9556 – Digital relay outputs, electrically isolated (DO 0 ... DO 1)	2-941
9560 – Digital inputs/outputs, bi-directional (DI/DO 8 ... DI/DO 9)	2-942
9562 – Digital inputs/outputs, bi-directional (DI/DO 10 ... DI/DO 11)	2-943
9566 – Analog input 0 (AI 0)	2-944
9568 – Analog input 1 (AI 1)	2-945
9572 – Analog outputs (AO 0 ... AO 1)	2-946
9576 – Temperature evaluation KTY/PTC	2-947
9577 – Sensor evaluation KTY/PTC	2-948

© Siemens AG, 2005. All rights reserved

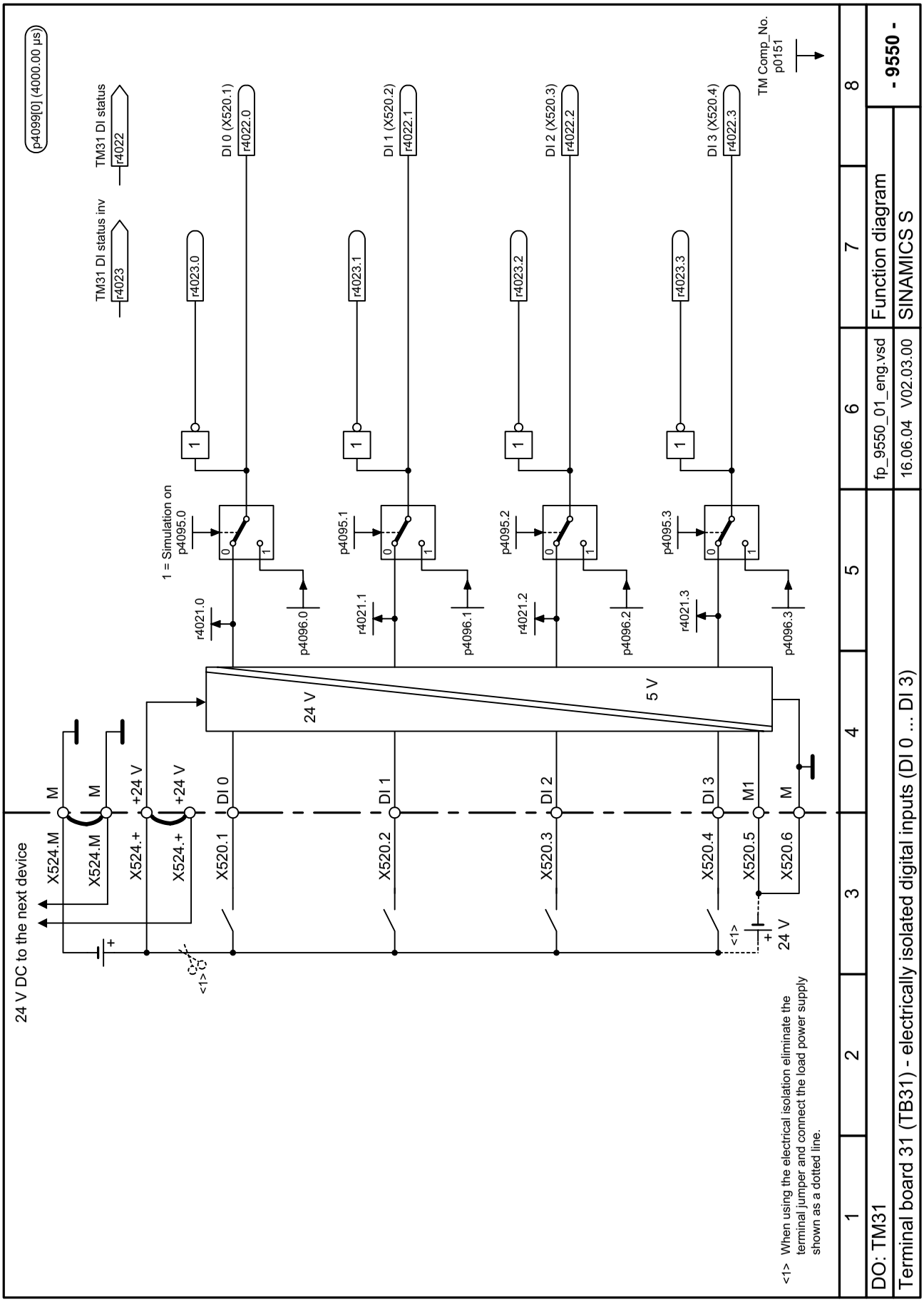

Figure 2-195 9550 – Digital inputs, electrically isolated (DI 0 ... DI 3)

© Siemens AG, 2005. All rights reserved

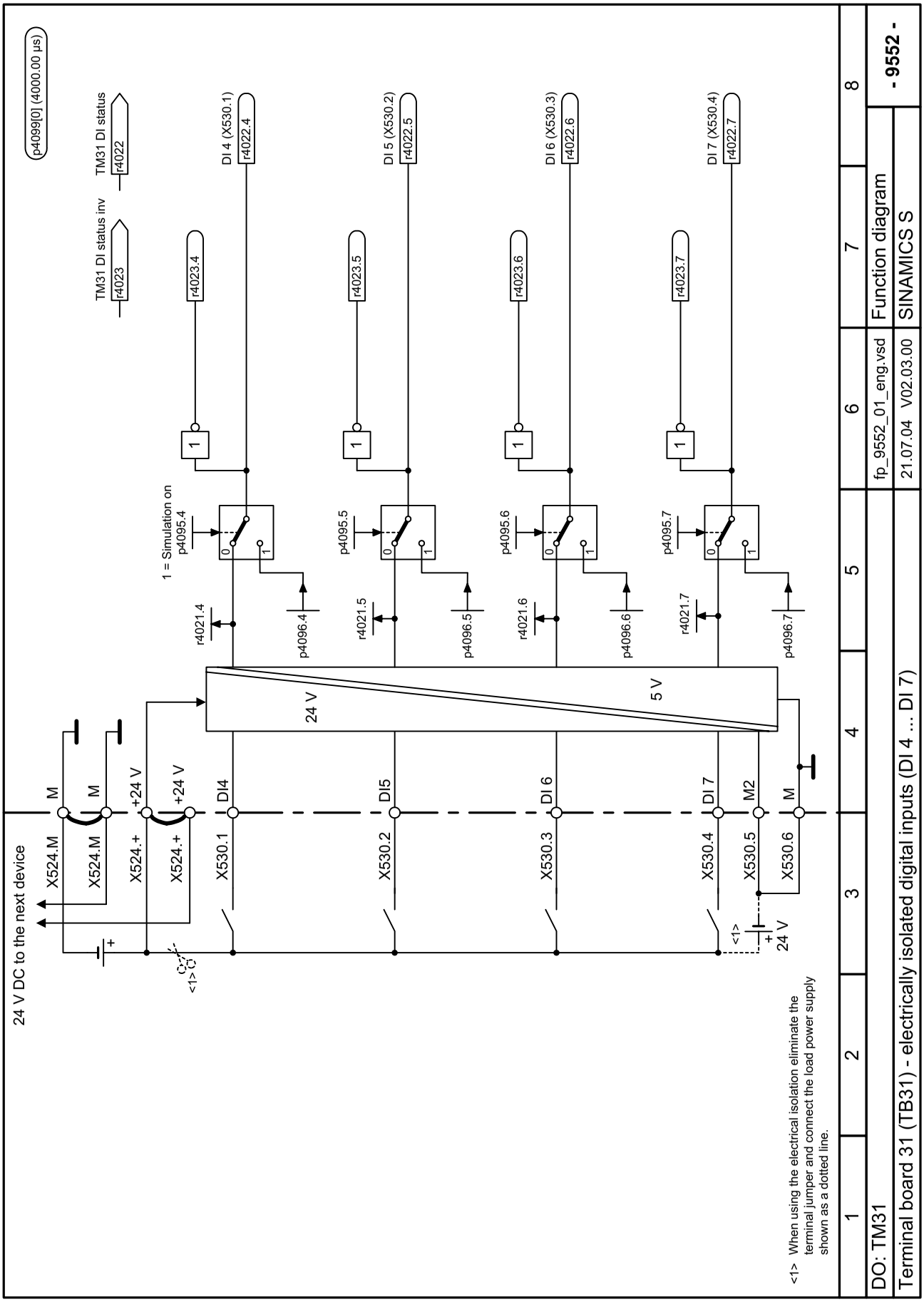

Figure 2-196 9552 – Digital inputs, electrically isolated (DI 4 ... DI 7)

© Siemens AG, 2005. All rights reserved
SINAMICS S List Manual, Edition 06.2005

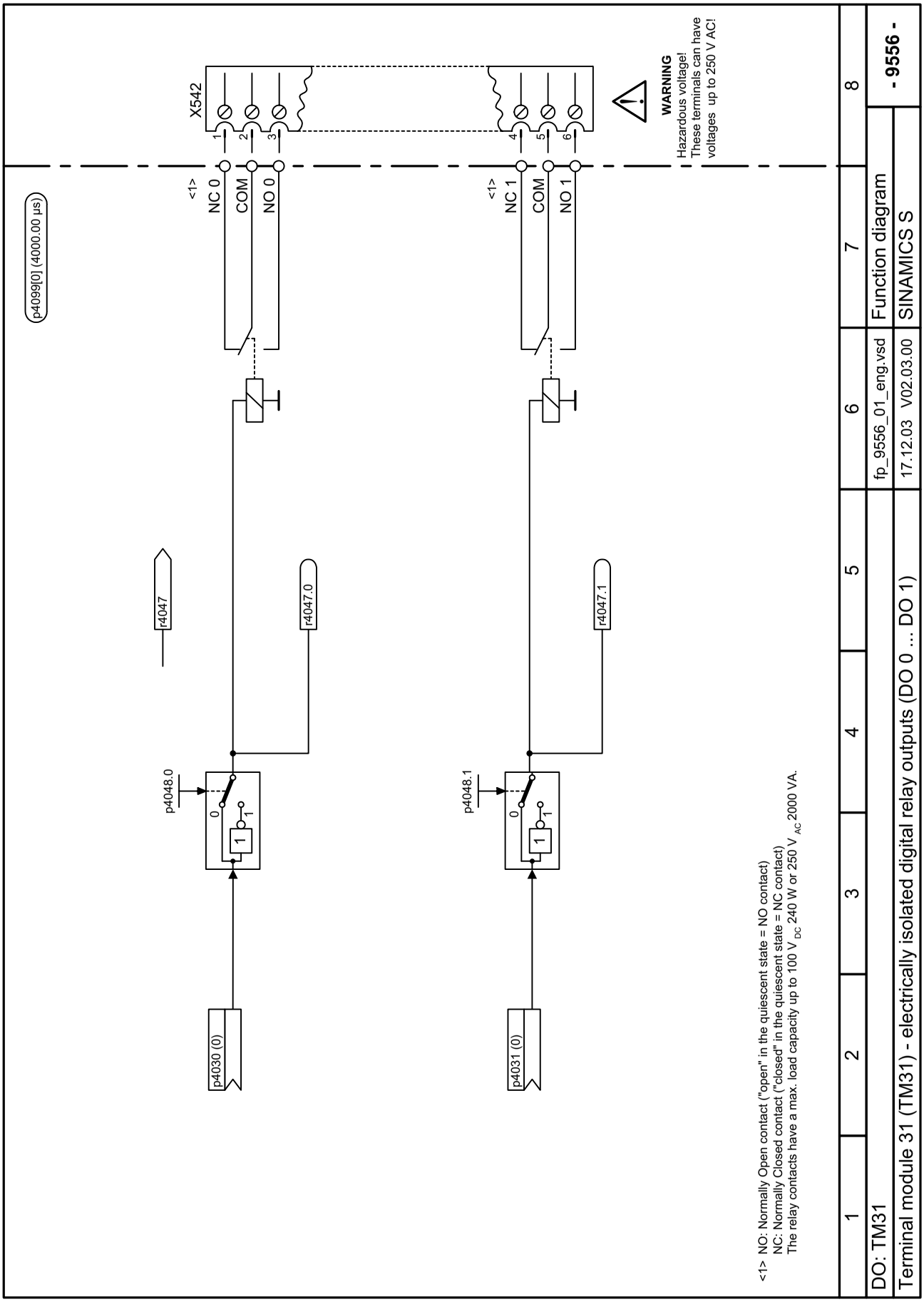

Figure 2-197 9556 – Digital relay outputs, electrically isolated (DO 0 ... DO 1)

© Siemens AG, 2005. All rights reserved

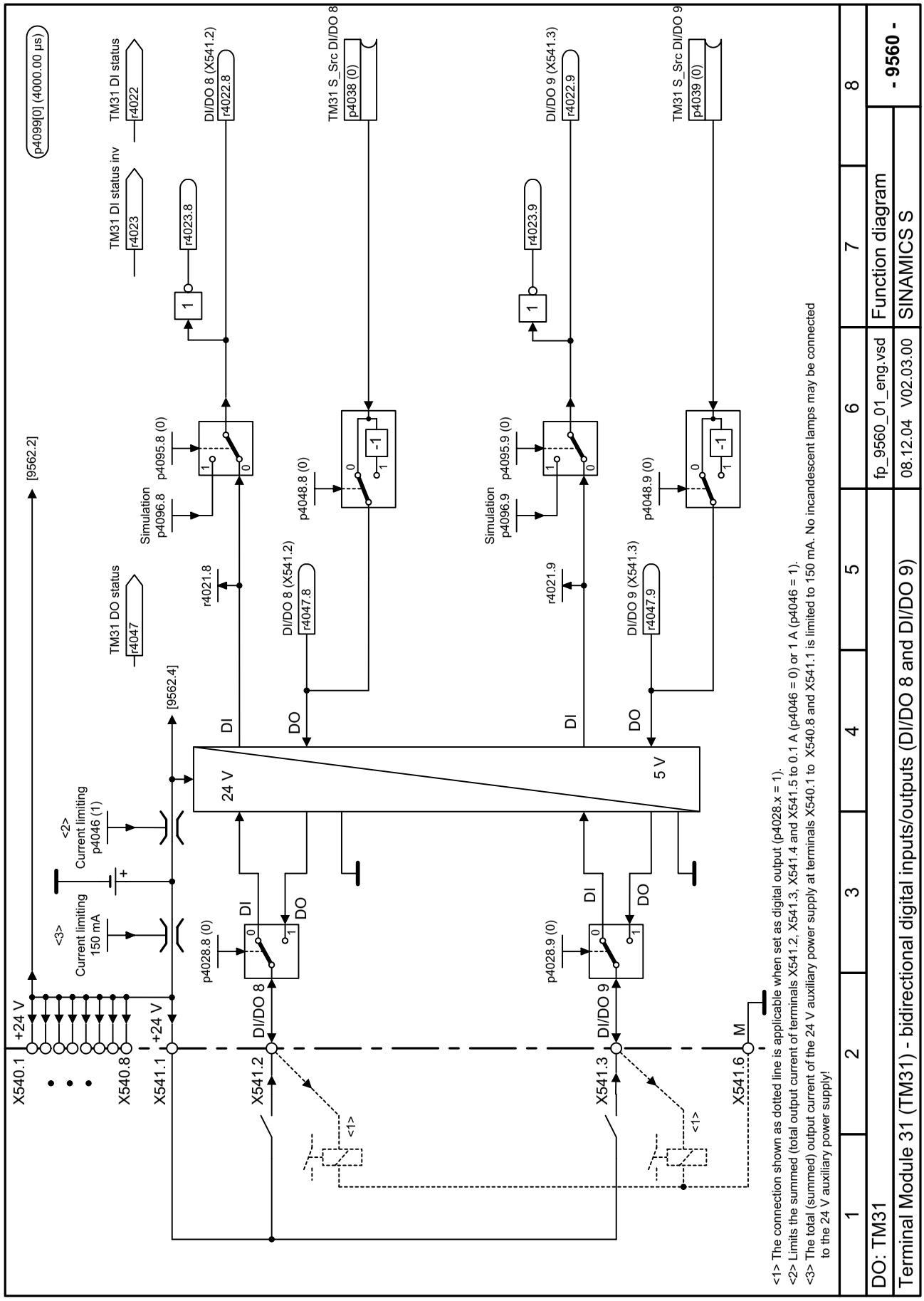

Figure 2-198 9560 – Digital inputs/outputs, bi-directional (DI/DO 8 ... DI/DO 9)

© Siemens AG, 2005. All rights reserved
SINAMICS S List Manual, Edition 06.2005

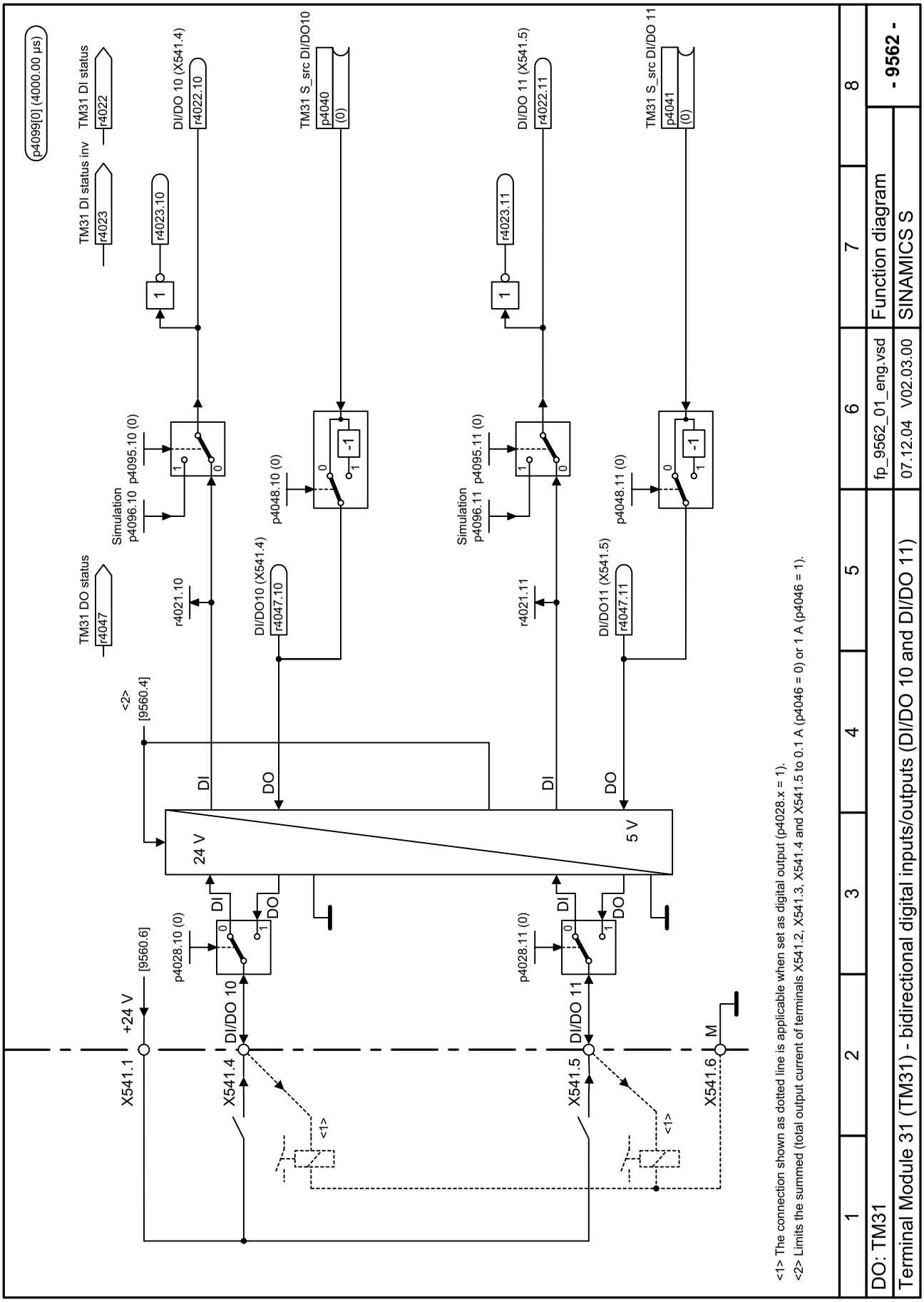

Figure 2-199 9562 – Digital inputs/outputs, bi-directional (DI/DO 10 ... DI/DO 11)

© Siemens AG, 2005. All rights reserved

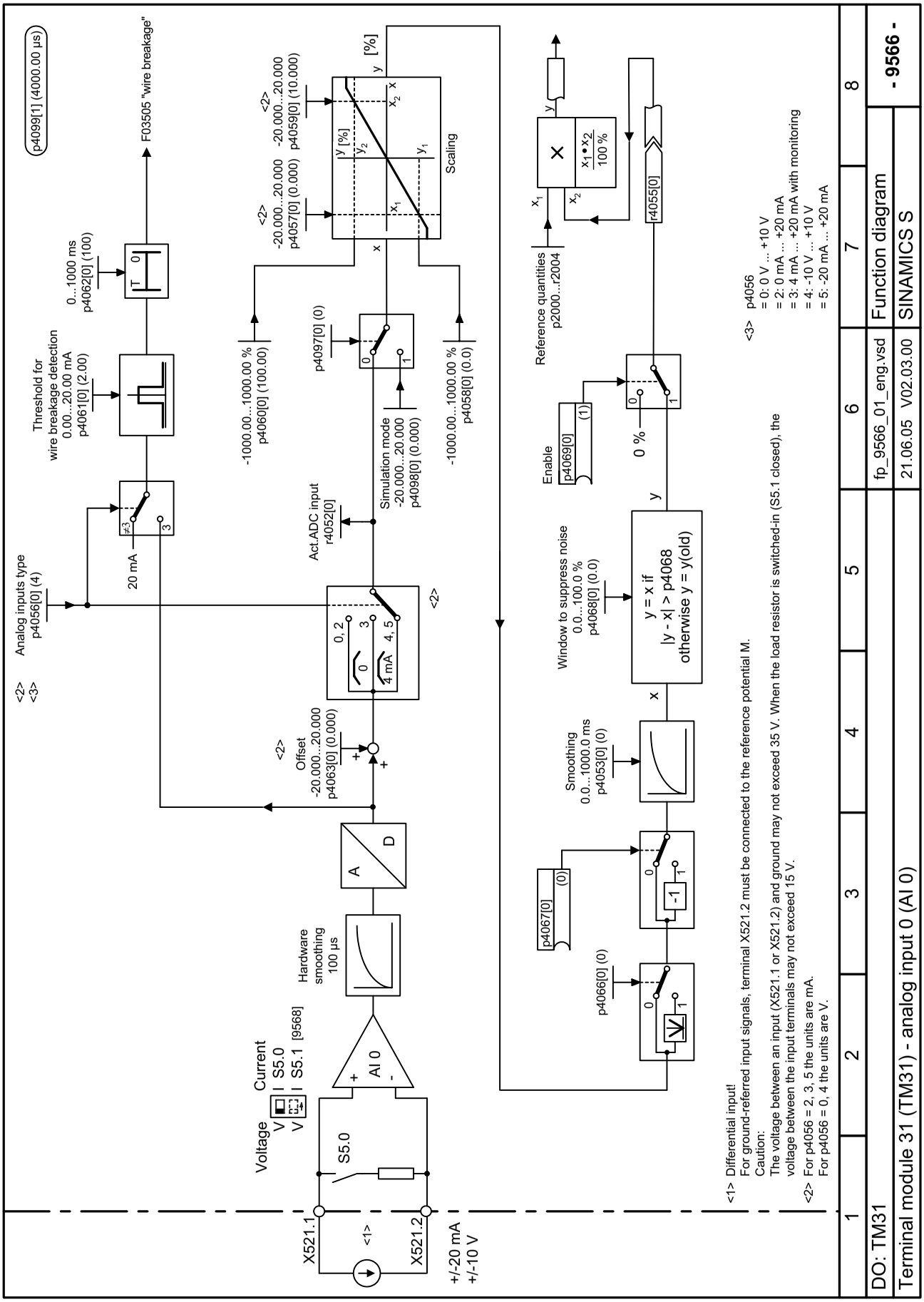

Figure 2-200 9566 – Analog input 0 (AI 0)

© Siemens AG, 2005. All rights reserved
SINAMICS S List Manual, Edition 06.2005

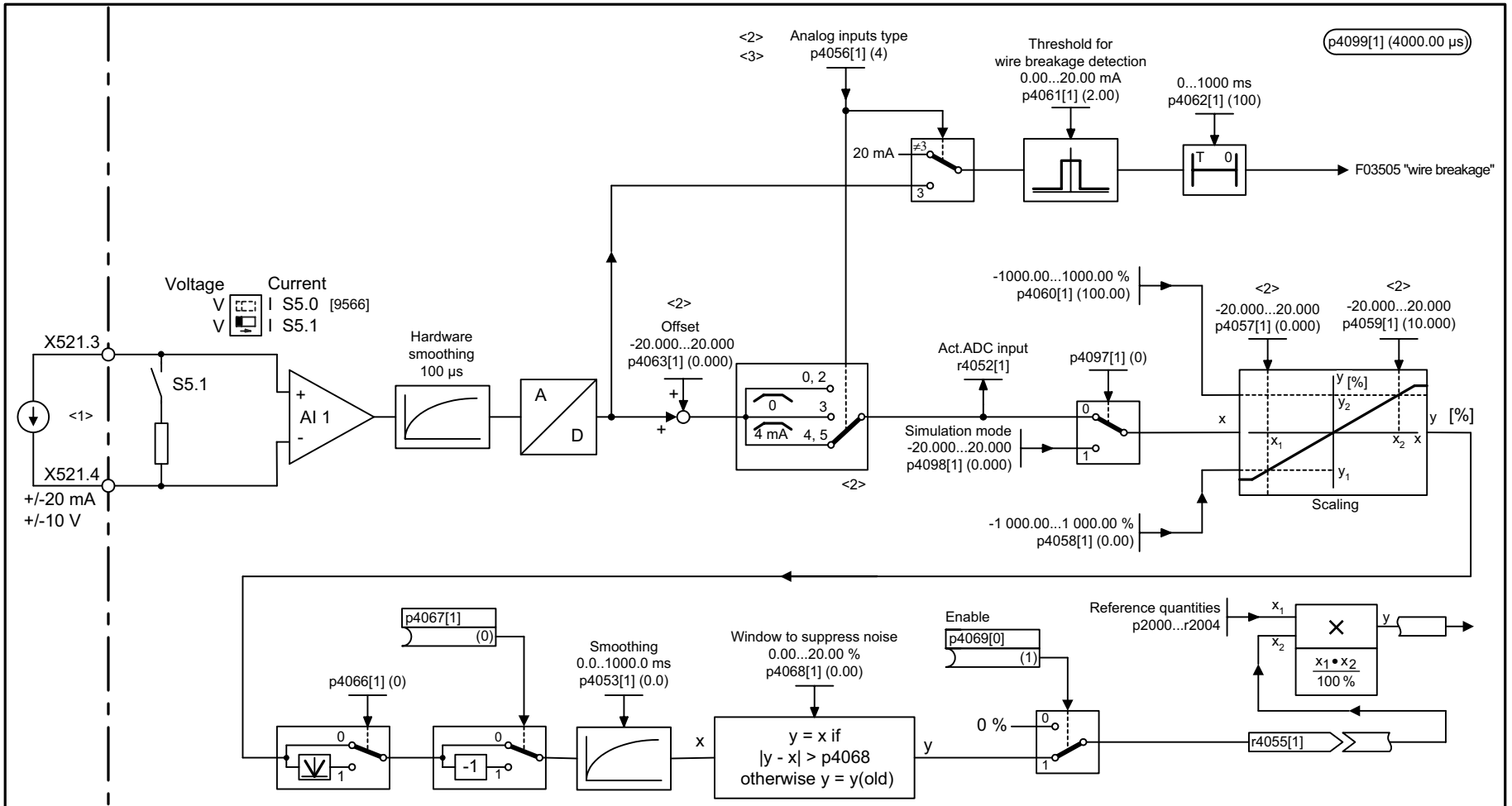

<1> Differential input!
For ground-referred input signals, terminal X521.4 must be connected to the reference potential M.
Caution:
The voltage between an input (X521.3 or X521.4) and ground may not exceed 35 V. When the load resistor is switched-in (S5.1 closed), the voltage between the input terminals may not exceed 15 V.

<2> For p4056 = 2, 3, 5 the units are mA.
For p4056 = 0, 4 the units are V.

<3> p4056
= 0: 0 V ... +10 V
= 2: 0 mA ... +20 mA
= 3: 4 mA ... +20 mA with monitoring
= 4: -10 V ... +10 V
= 5: -20 mA ... +20 mA

1	2	3	4	5	6	7	8
DO: TM31					fp_9568_01_eng.vsd	Function diagram	- 9568 -
Terminal module 31 (TM31) - analog input 1 (AI 1)					29.07.05 V02.03.00	SINAMICS S	

Figure 2-201 9568 – Analog input 1 (AI 1)

© Siemens AG, 2005. All rights reserved
SINAMICS S List Manual, Edition 06.2005

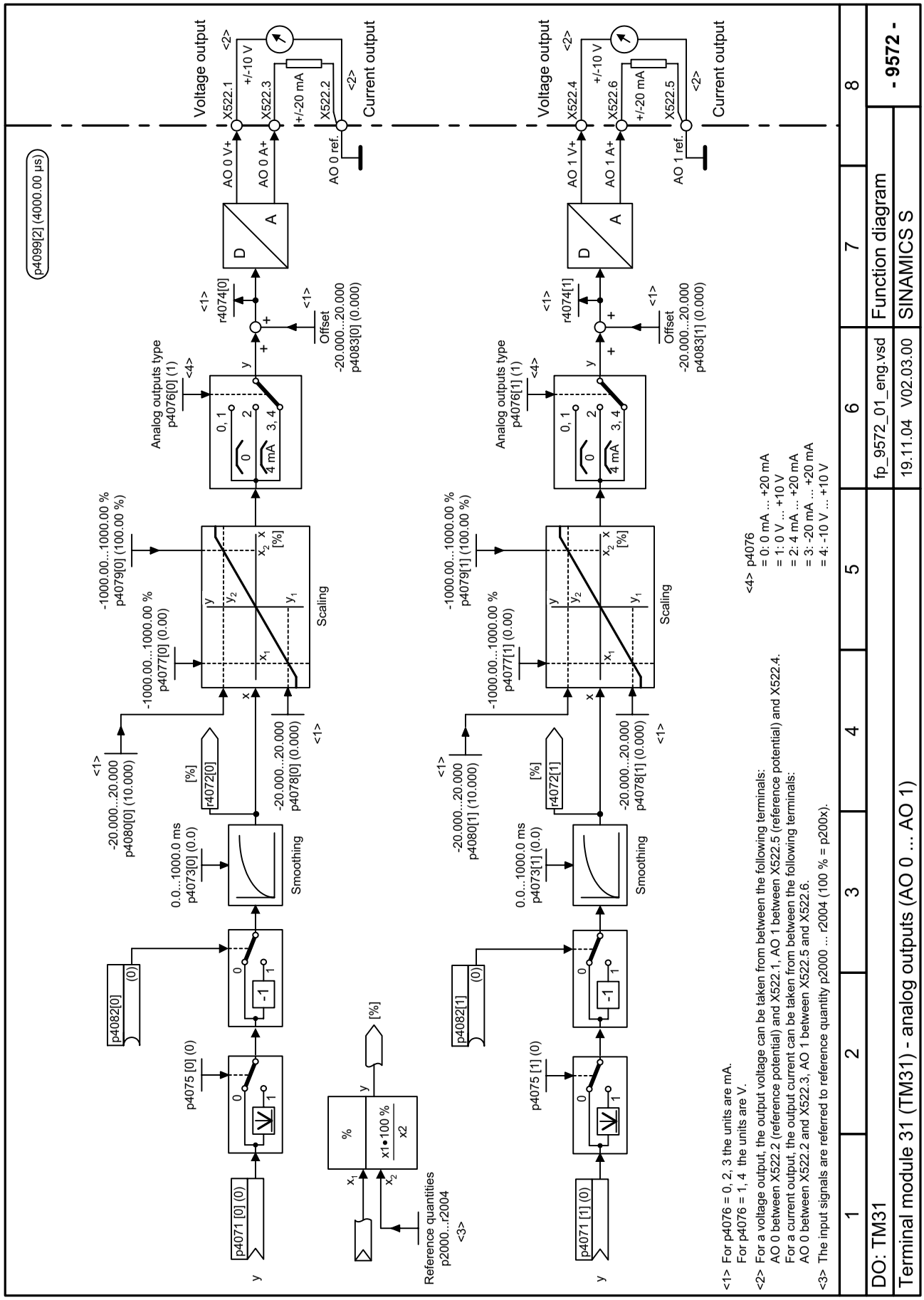

Figure 2-202 9572 – Analog outputs (AO 0 ... AO 1)

© Siemens AG, 2005. All rights reserved
SINAMICS S List Manual, Edition 06.2005

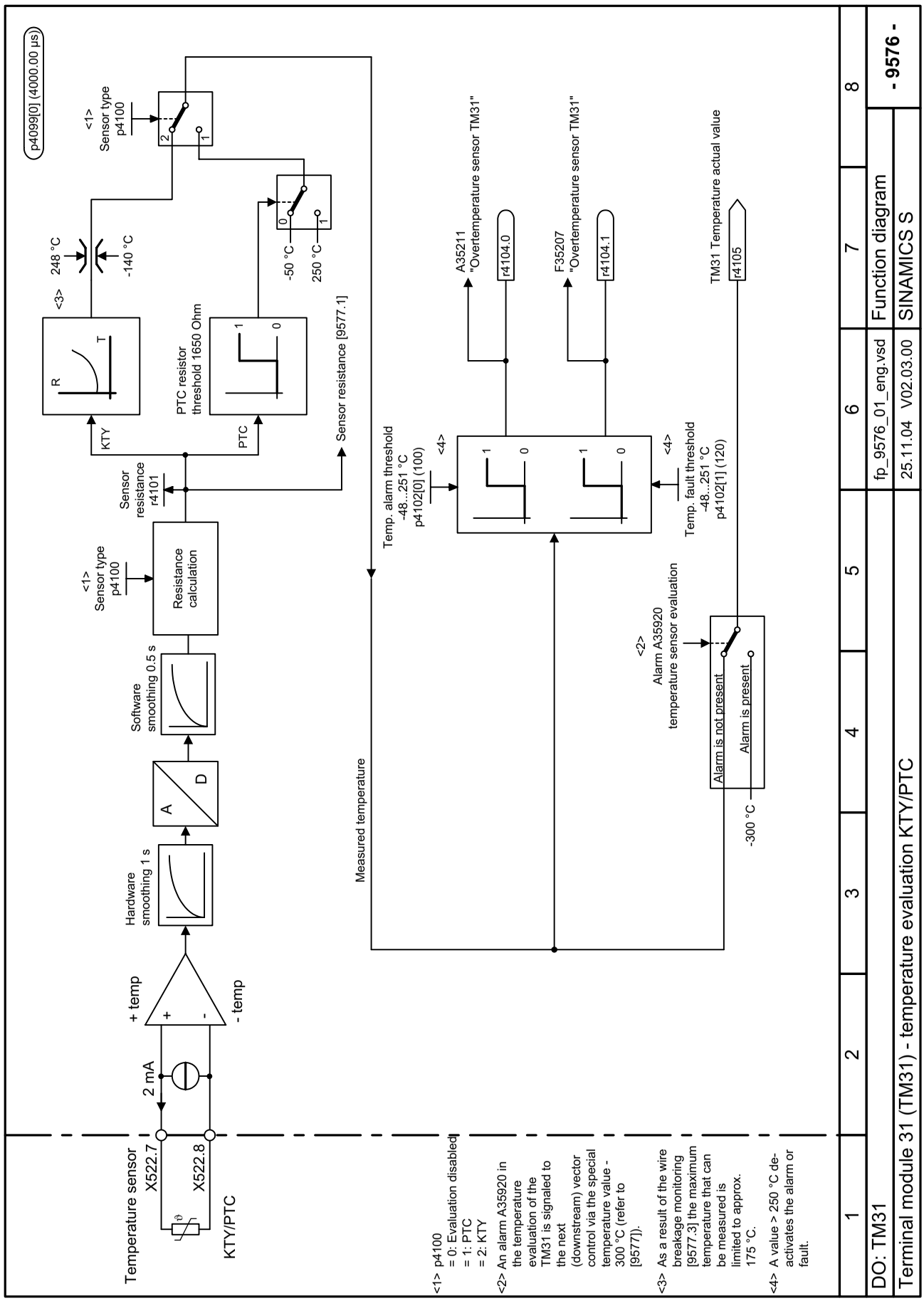

Figure 2-203 9576 – Temperature evaluation KTY/PTC

© Siemens AG, 2005. All rights reserved

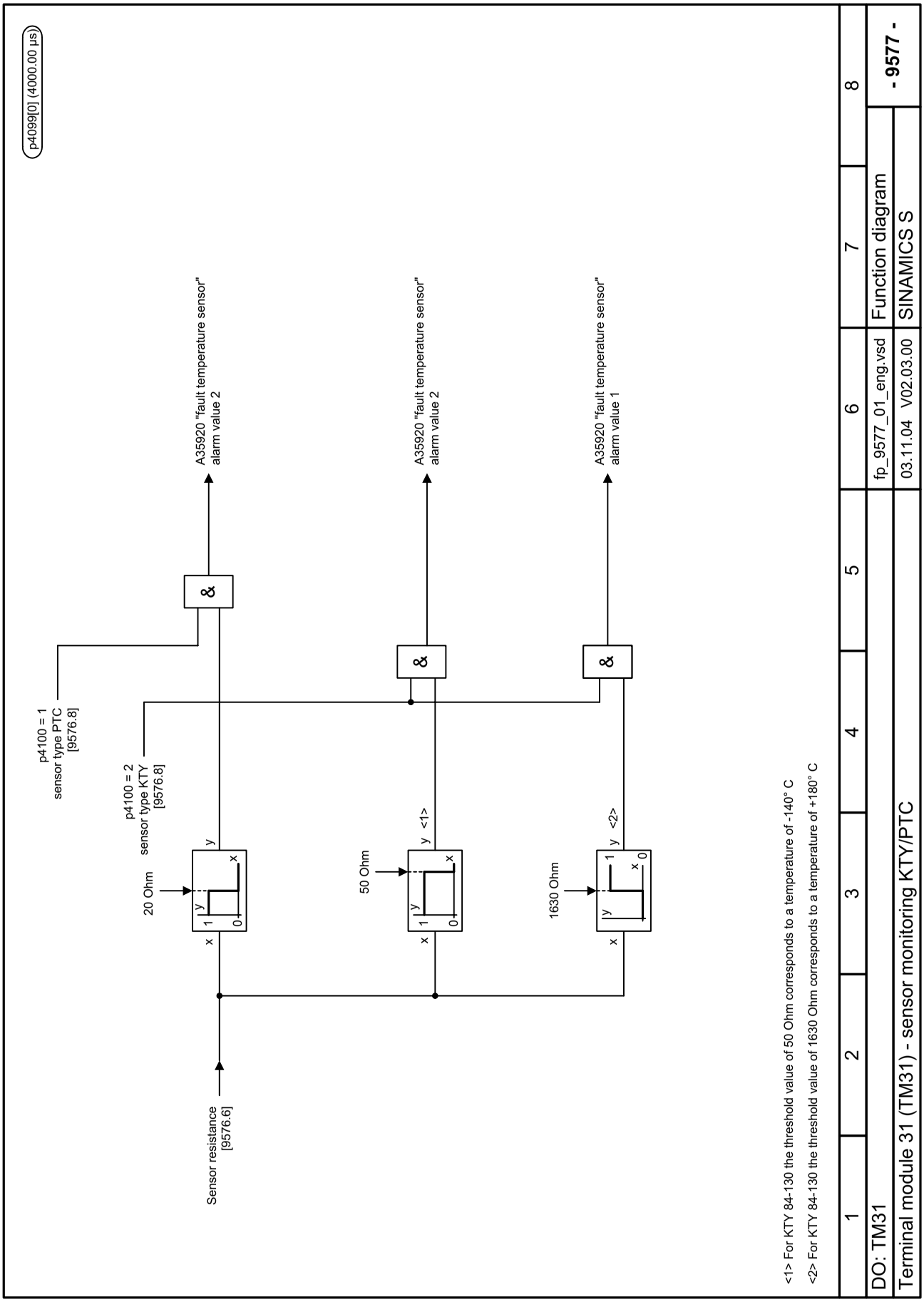

Figure 2-204 9577 – Sensor evaluation KTY/PTC

© Siemens AG, 2005. All rights reserved
SINAMICS S List Manual, Edition 06.2005

2.28 Terminal Module 41 (TM41)

Function diagrams

9674 – Incremental encoder emulation 2-950

© Siemens AG, 2005. All rights reserved

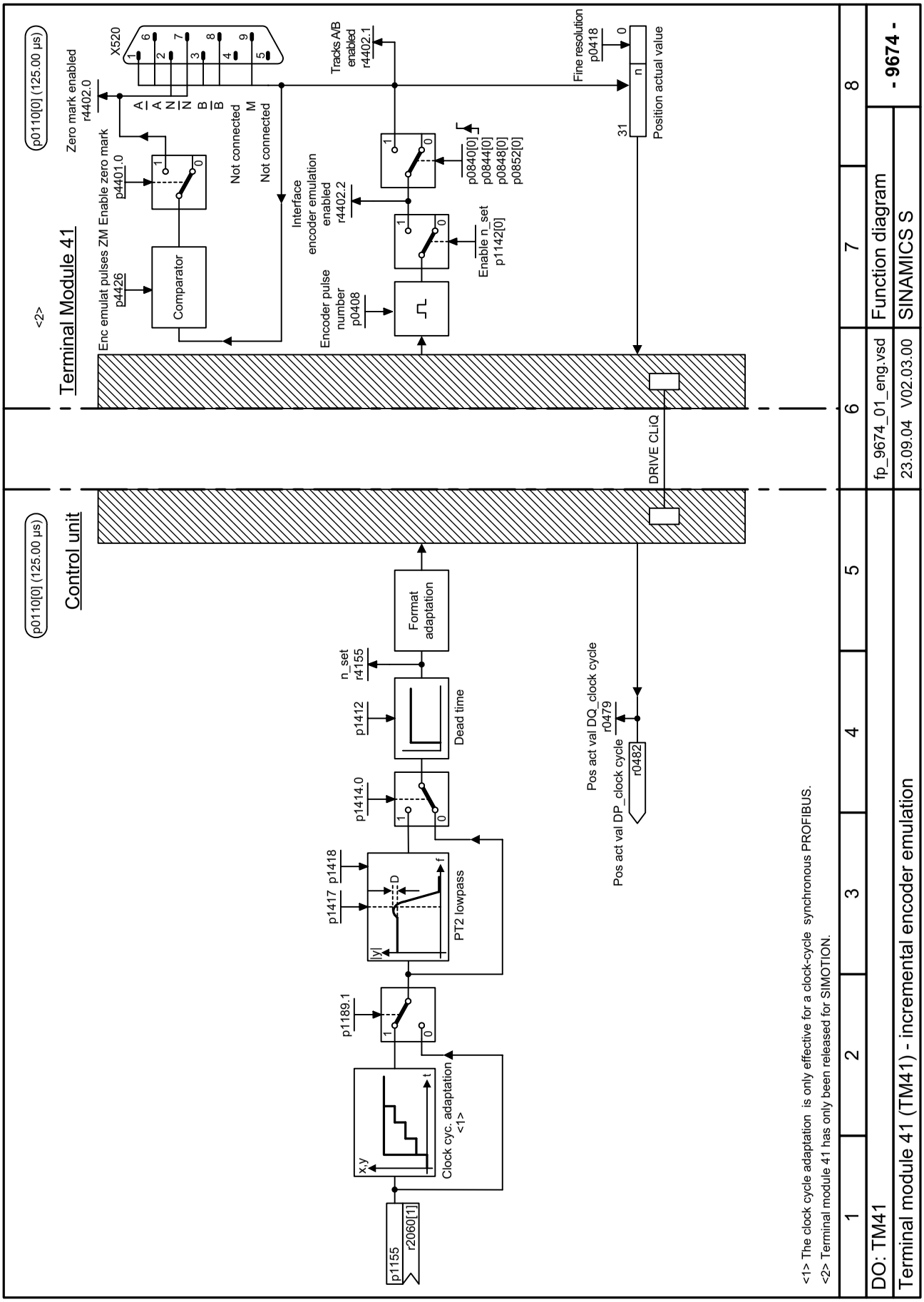

Figure 2-205 9674 – Incremental encoder emulation

© Siemens AG, 2005. All rights reserved
SINAMICS S List Manual, Edition 06.2005

2.29 Voltage Sensing Module (VSM)

Function diagrams

9880 – Analog inputs (AI 0 ... AI 3)	2-952
9886 – Temperature evaluation	2-953
9887 – Sensor evaluation KTY/PTC	2-954

© Siemens AG, 2005. All rights reserved

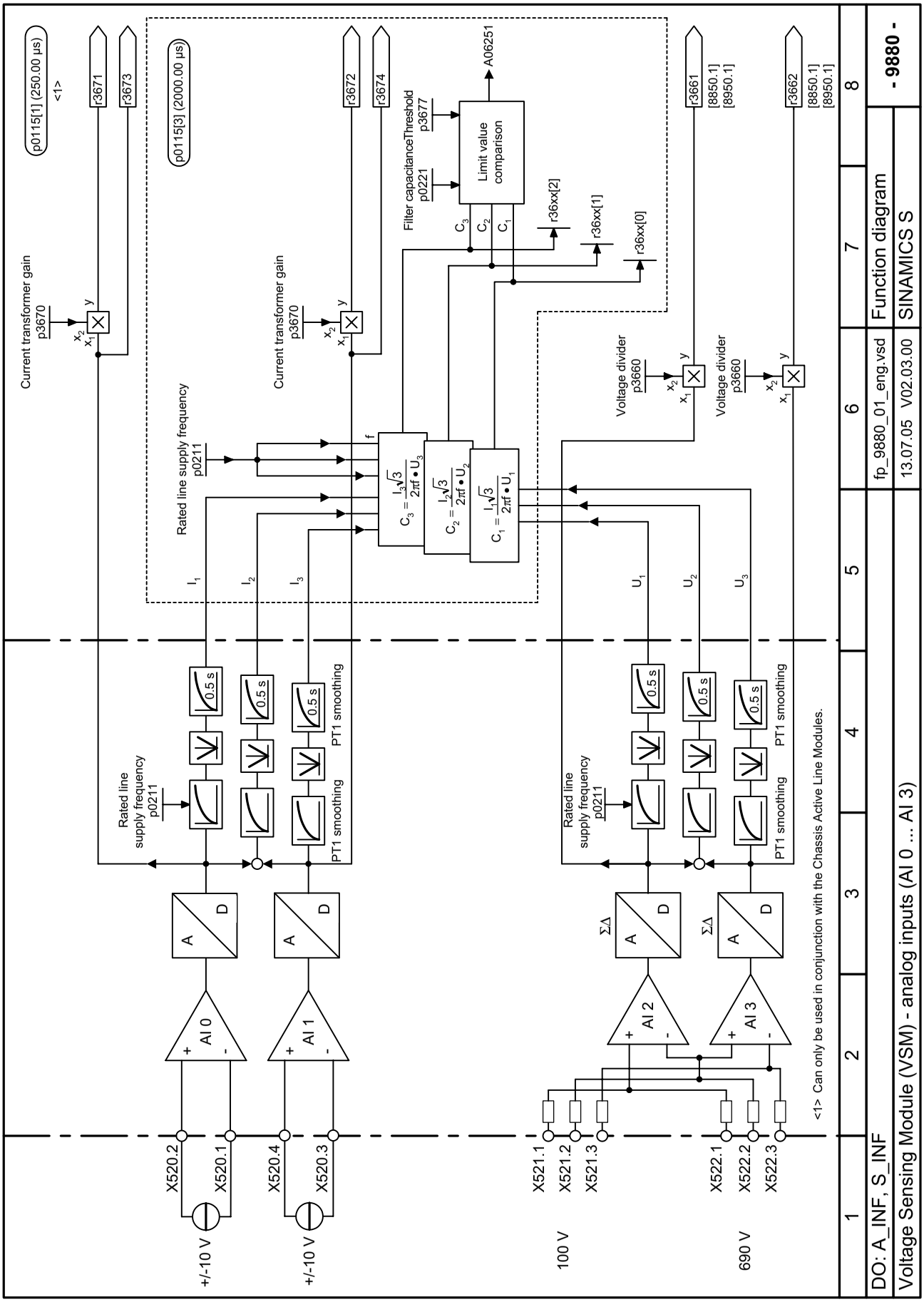

Figure 2-206 9880 – Analog inputs (AI 0 ... AI 3)

© Siemens AG, 2005. All rights reserved

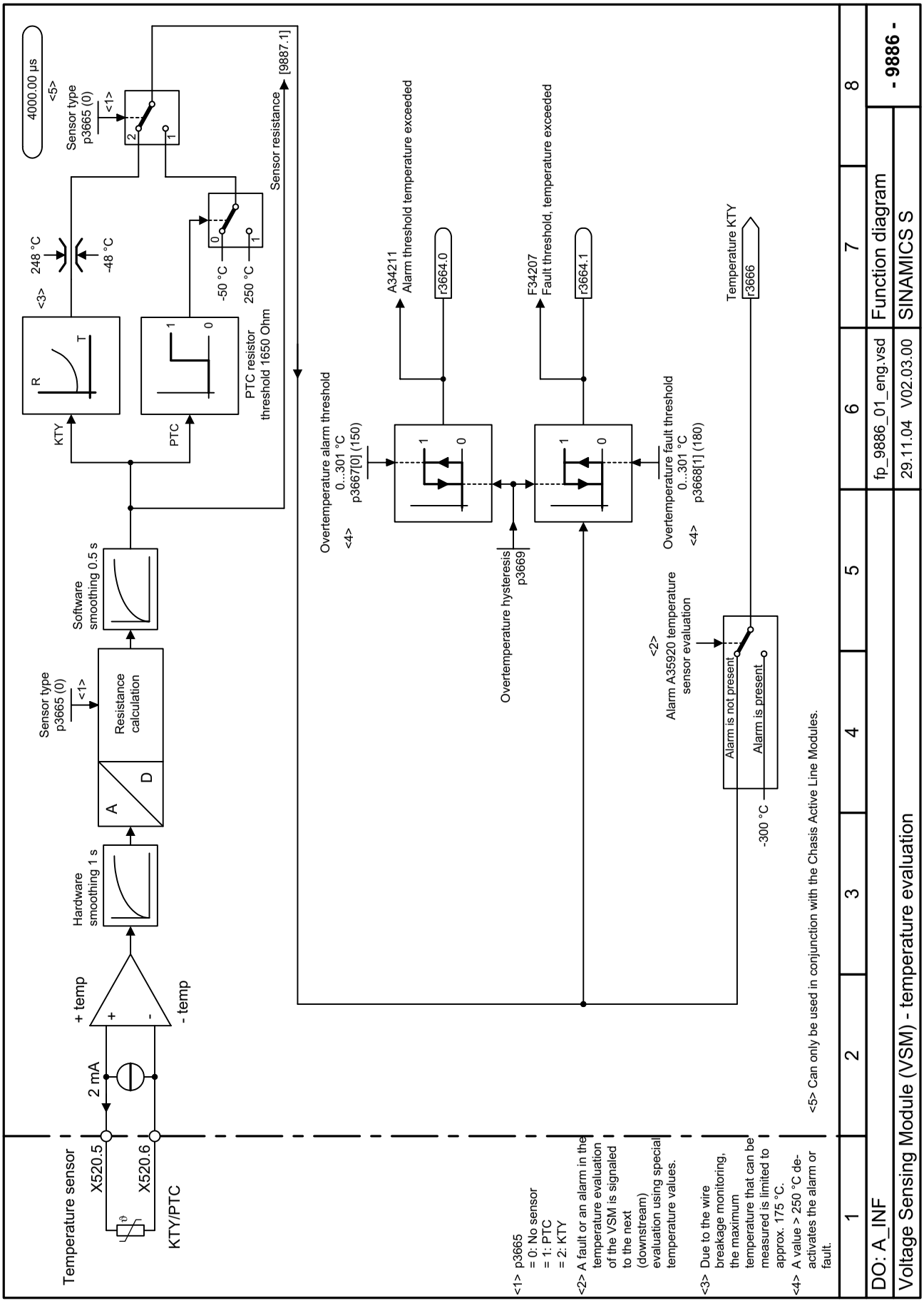

Figure 2-207 9886 – Temperature evaluation

© Siemens AG, 2005. All rights reserved

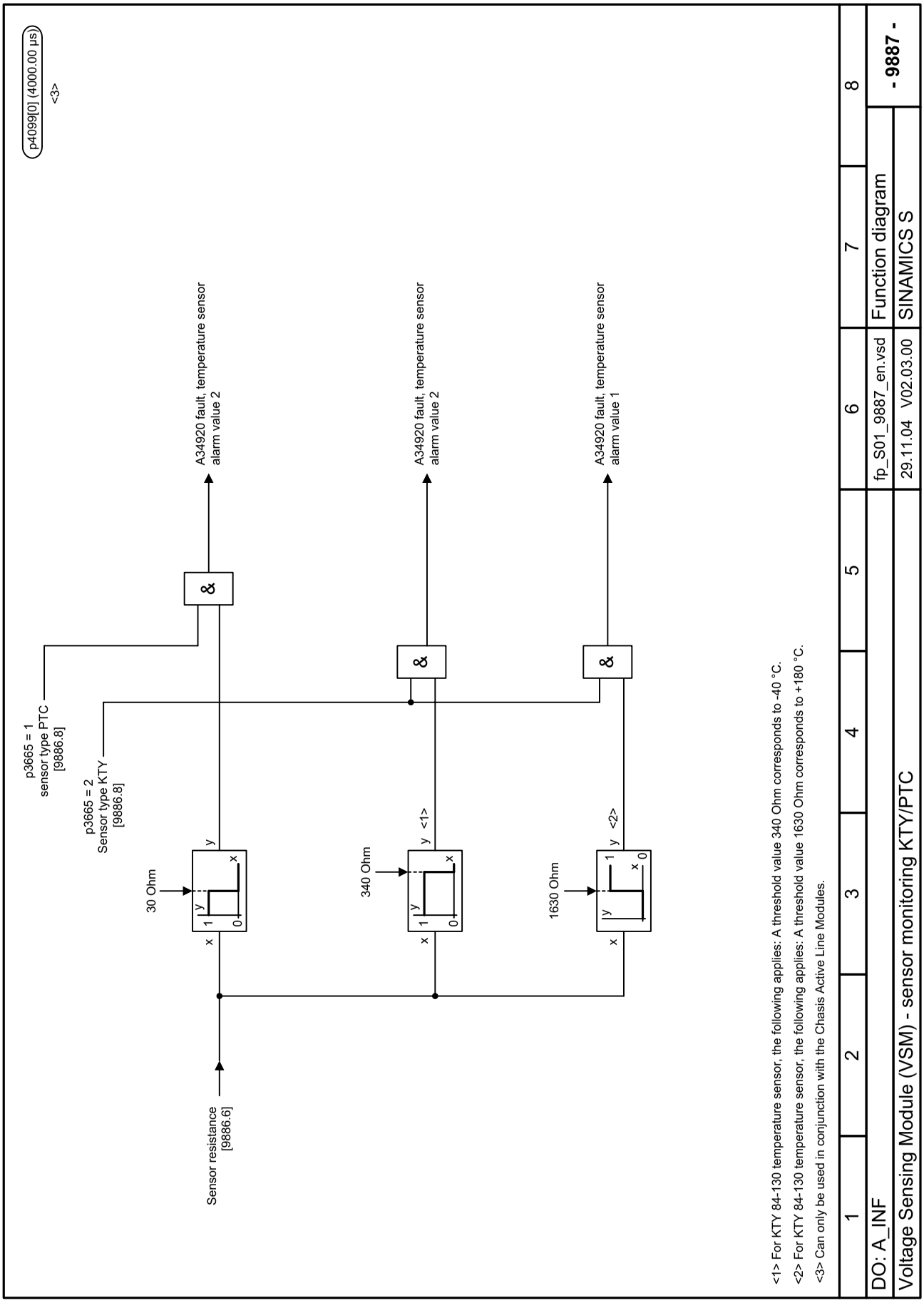

Figure 2-208 9887 – Sensor evaluation KTY/PTC

© Siemens AG, 2005. All rights reserved

Faults and Alarms

3

Contents

3.1	Overview of Faults and Alarms	3-956
3.2	List of Faults and Alarms	3-964

© Siemens AG, 2005. All rights reserved

3.1 Overview of Faults and Alarms

3.1.1 General information about faults and alarms

Displaying faults/alarms

If a fault occurs, the drive indicates the fault and/or alarm.

The following methods for displaying faults and alarms are available:

- Display via the fault and alarm buffer with PROFIBUS.
- Display online via the commissioning software.

Differences between faults and alarms

The differences between faults and alarms are as follows:

Table 3-1 Differences between faults and alarms

Type	Description
Faults	What happens when a fault occurs? • The appropriate fault reaction is triggered. • Status signal ZSW1.3 is set. • The fault is entered in the fault buffer. How are faults eliminated? • Remove the original cause of the fault. • Acknowledge the fault.
Alarms	What happens when an alarm occurs? • Status signal ZSW1.7 is set. • The alarm is entered in the alarm buffer. How are alarms eliminated? • Alarms are "self acknowledging", that is, they are reset automatically when the cause of the alarm has been eliminated.

© Siemens AG, 2005. All rights reserved

Fault reactions

The following fault reactions are defined:

Table 3-2 Fault reactions

List	PROFI drive	Reaction	Description
NONE	-	None	No reaction when a fault occurs.
OFF1	ON/ OFF	Brake along the ramp generator deceleration ramp followed by pulse disable	**Closed-loop speed control (p1300 = 20, 21)** • n_set = 0 is input immediately to brake the drive along the deceleration ramp (p1121). • When zero speed is detected, the motor holding brake (if parameterized) is closed (p1215). The pulses are suppressed when the brake application time (p1217) expires. Zero speed is detected if the actual speed drops below the threshold in p1226 or if the monitoring time (p1227) started when speed setpoint <= speed threshold (p1226) has expired. **Closed-loop torque control (p1300 = 23)** • The following applies to closed-loop torque control mode: Reaction as for OFF2 • On switchover to closed-loop torque control (p1501), the following applies: No separate braking response. If the actual speed drops below the speed threshold (p1226), the motor holding brake (if parameterized) is closed. The pulses are suppressed when the brake application time (p1217) expires.
OFF2	COAST STOP	Internal/external pulse disable	**Closed-loop speed and torque control** • Instantaneous pulse suppression, the drive "coasts" to a standstill. • The motor holding brake (if parameterized) is closed immediately. • Power-on disable is activated.
OFF3	QUICK STOP	Brake along the OFF3 deceleration ramp followed by pulse disable	**Closed-loop speed control (p1300 = 20, 21)** • n_set=0 is input immediately to brake the drive along the OFF3 deceleration ramp (p1135). • When zero speed is detected, the motor holding brake (if parameterized) is closed. The pulses are suppressed when the brake application time (p1217) expires. Zero speed is detected if the actual speed drops below the threshold in p1226 or if the monitoring time (p1227) started when speed setpoint <= speed threshold (p1226) has expired. • Power-on disable is activated. **Closed-loop torque control (p1300 = 23)** • Switchover to speed-controlled operation and other reactions as described for speed-controlled operation.

© Siemens AG, 2005. All rights reserved

Table 3-2 Fault reactions, Continued

List	PROFI drive	Reaction	Description
STOP1	-	-	Available soon
STOP2	-	n_set = 0	• n_set=0 is input immediately to brake the drive along the OFF3 deceleration ramp (p1135). • The drive remains in closed-loop speed control mode.
DCBRAKE	-	-	Available soon
ENCODER	-	Internal/external pulse disable (p0491)	The fault reaction ENCODER is applied as a function of the setting in p0491. Factory setting: p0491 = 0 --> Encoder fault causes OFF2

Acknowledgement of faults

The list of faults and alarms specifies how to acknowledge each fault after the cause has been remedied.

Table 3-3 Acknowledgement of faults

List	Description
POWER ON	The fault is acknowledged by a POWER ON process (switch drive unit off and on again). **Note:** If this action has not eliminated the fault cause, the fault is displayed again immediately after power up.
IMMEDIATELY	Starting from a drive object, the fault can be acknowledged by the following methods: 1 Acknowledge by setting parameter: p3981 = 0 --> 1 2 Acknowledge via binector inputs: p2103 BI: 1. Acknowledge faults p2104 BI: 2. Acknowledge faults p2105 BI: 3. Acknowledge faults 3 Acknowledge using PROFIBUS control signal: STW1.7 = 0 --> 1 (edge) **Note:** • These faults can also be acknowledged by a POWER ON operation. • If this action has not eliminated the fault cause, the fault is displayed again immediately after power up. • Safety Integrated faults The "Safe Stop" (SH) function must be deselected before these faults are acknowledged.
READY	The fault can be acknowledged only in the READY state. In this state, the DC link is charged and the pulses disabled.

© Siemens AG, 2005. All rights reserved

Save fault buffer on POWER OFF

The contents of the fault buffer are saved to non-volatile storage when the Control Unit 320 (CU320) is powered down, i.e. the fault buffer history is still available when the unit is powered up again.

Note:

Prerequisites:

- Firmware with version V2.2 or later.
- Control Unit 320 (CU320) with hardware version C or higher.
  The hardware version is shown on the rating plate or can be displayed online with the commissioning software (in Project Navigator under "Drive Unit" --> Configuration --> Version Overview).

If these conditions are not fulfilled, the contents of the fault buffer are deleted on every POWER ON.

The fault buffer of a drive object comprises the following parameters:

- r0945[0...63], r0947[0...63], r0948[0...63], r0949[0...63]
- r2109[0...63], r2130[0...63], r2133[0...63], r2136[0...63]

The fault buffer contents can be deleted manually as follows:

- Delete fault buffer for all drive objects:
  p2147 = 1 --> p2147 = 0 is automatically set after execution.
- Delete fault buffer for a specific drive object:
  p0952 = 0 --> The parameter belongs to the specified drive object.

The fault buffer contents are automatically deleted in response to the following events:

- Restore factory setting (p0009 = 30 and p0976 = 1).
- Download with modified structure (e.g. number of drive objects changed).
- Power-up after other parameter values have been loaded (e.g. p0976 = 10).
- Firmware release upgrade.

© Siemens AG, 2005. All rights reserved

3.1.2 Explanation of the list of faults and alarms

The data in the following example has been chosen at random. A description can contain the information listed below. Some of the information is optional.

The list of faults and alarms (See section 3.2) has the following layout:

- Start of example -

Axxxxx (F, N)	**Fault location (optional): Name**
Response:	NONE
Acknowledge-ment:	NONE
Cause:	Description of possible causes. Fault value (r0949, format): or alarm value (r2124, format): (optional) Information about fault or alarm values (optional).
Remedy:	Description of possible remedies.
Reaction to F:	A_INFEED: OFF2 (OFF1, NONE) SERVO: NONE (OFF1, OFF2, OFF3) VECTOR: NONE (OFF1, OFF2, OFF3)
Acknowledge-ment for F:	IMMEDIATELY (POWER ON)
Reaction to N:	NONE
Acknowledge-ment for N:	NONE

- End of example -

Axxxxx	**Alarm xxxxx**
Axxxxx (F, N)	**Alarm xxxxx (message type can be changed to F or N)**
Fxxxxx	**Fault xxxxx**
Fxxxxx (A, N)	**Fault xxxxx (report type can be changed to F or N)**
Nxxxxx	**No message**
Nxxxxx (A)	**No message (message type can be changed to A)**
Cxxxxx	**Safety message (separate message buffer)**

A report comprises a letter followed by the relevant number.

The meaning of the letters is as follows:

- A means "Alarm"
- F means "Fault"
- N means "No Report" or "Internal Report"
- C means "Safety message"

The optional parenthesis indicates whether the type specified for this report can be changed and which report types can be adjusted via parameter.

Information about reaction and acknowledgement are specified independently for a report with adjustable report type (e.g. reaction to F, acknowledgement for F).

© Siemens AG, 2005. All rights reserved

Note:

You can change the default properties of a fault or alarm by setting parameters.

References: /IH1/ SINAMICS S120 Installation and Start-Up Manual "Diagnosis" section

Fault location (optional): Name

The fault location (optional), the name of the fault or alarm and the report number all serve to identify the report (e.g. with the commissioning software).

Response: Default fault reaction (adjustable fault reaction)

Specifies the default reaction in the event of a fault.

The optional parenthesis indicates whether the default fault reaction can be changed and which fault reactions can be adjusted via parameter.

Note:

See Section 3.1.1

Acknowledgement: Default acknowledgement (adjustable acknowledgement)

Specifies the default method of fault acknowledgement after the cause has been eliminated.

The optional parenthesis indicates whether the default acknowledgement can be changed and which acknowledgement can be adjusted via parameter.

Note:

See Section 3.1.1

Cause:

Description of the possible causes of the fault/alarm A fault or alarm value is also specified as an option.

Fault value (r0949, format):

The fault value is entered in the fault buffer in r0949[0...63] and specifies additional, precise information about a fault.

Alarm value (r2124, format):

The alarm value specifies additional, precise information about an alarm.

The alarm value is entered in the alarm buffer in r2124[0...7] and specifies additional, precise information about an alarm.

© Siemens AG, 2005. All rights reserved

Remedy:

Description of the potential methods for eliminating the cause of the active fault or alarm.

Warning

In individual cases, the servicing and maintenance personnel are responsible for choosing a suitable method for eliminating the cause of faults.

© Siemens AG, 2005. All rights reserved

3.1.3 Numerical ranges of faults and alarms

Faults and alarms are organized into the following numerical ranges:

Table 3-4 Numerical ranges of faults and alarms

From	To	Range
1000	2999	Control Unit
3000	4999	Reserved
5000	5999	Power Module
6000	6999	Supply
7000	7999	Drives
8000	8999	Option Board
9000	29999	Reserved
30000	30999	DRIVE-CLiQ component power section
31000	31999	DRIVE-CLiQ component encoder 1
32000	32999	DRIVE-CLiQ component encoder 2
33000	33999	DRIVE-CLiQ component encoder 3
34000	34999	Reserved
35000	35999	Terminal Module 31 (TM31)
36000	49999	Reserved
50000	50399	Communication Board (COMM BOARD)
50400	65535	Reserved

© Siemens AG, 2005. All rights reserved

3.2 List of Faults and Alarms

Product: SINAMICS S, Version: 2302000, Label: ., Language: eng

F01000 Internal software error

Reaction: OFF2
Acknowledge: POWER ON
Cause: An internal software error has occurred.
Fault value (r0949, hexadecimal):
Only for internal Siemens troubleshooting.
Remedy: - carry-out a POWER ON (power off/on) for all components.
- upgrade the firmware release.
- contact the Hotline.
- replace the Control Unit.

F01001 Internal software error

Reaction: OFF2
Acknowledge: POWER ON
Cause: An internal software error has occurred.
Fault value (r0949, hexadecimal):
Only for internal Siemens troubleshooting.
Remedy: - carry-out a POWER ON (power off/on) for all components.
- upgrade the firmware release.
- contact the Hotline.

F01002 Internal software error

Reaction: OFF2
Acknowledge: POWER ON
Cause: An internal software error has occurred.
Fault value (r0949, hexadecimal):
Only for internal Siemens troubleshooting.
Remedy: - carry-out a POWER ON (power off/on) for all components.
- upgrade the firmware release.
- contact the Hotline.

F01003 Acknowledgment delay when accessing the memory

Reaction: OFF2
Acknowledge: POWER ON
Cause: A memory area was accessed that does not return a "READY".
Fault value (r0949, hexadecimal):
Only for internal Siemens troubleshooting.
Remedy: - carry-out a POWER ON (power off/on) for all components.
- contact the Hotline.

© Siemens AG, 2005. All rights reserved

F01005 Firmware download DRIVE-CLiQ component unsuccessful

Reaction: NONE

Acknowledge: IMMEDIATELY

Cause: Firmware was not able to be downloaded into a DRIVE-CLiQ component.
Fault value (r0949):
xxyyyy hex: xx = component number, yyyy = cause of the fault.
Cause of the fault (decimal):
011: DRIVE-CLiQ component has detected a checksum error.
015: The selected DRIVE-CLiQ component did not accept the contents of the firmware file.
101: After several communication attempts, not response from the DRIVE-CLiQ component.
140: Firmware file for the DRIVE-CLiQ component not available on the CompactFlash card.
143: Component is not changed in the firmware download mode.
156: Component with the specified component number is not available (p7828).
Additional values:
Only for internal Siemens troubleshooting.

Remedy: - check the selected component number (p7828).
- check the DRIVE-CLiQ connection.
- save suitable firmware file for download in the directory /siemens/sinamics/code/sac/.
- after POWER ON has been carried-out again for the DRIVE-CLiQ component, download the firmware again.

A01006 Firmware update DRIVE-CLiQ component required

Reaction: NONE

Acknowledge: NONE

Cause: The firmware of a DRIVE CLiQ component must be updated as there is no suitable firmware or firmware version in the component for operation with the Control Unit.
Alarm value (r2124, decimal):
Component number of the DRIVE-CLiQ component.

Remedy: Firmware update using the commissioning software:
The firmware version of all of the components on the "version overview" page can be read in the Project Navigator under "Configuration" of the associated drive unit and an appropriate firmware update can be carried-out.
Firmware update via parameter:
- take the component number from the alarm value and enter into p7828.
- start the firmware download with p7829 = 1.

A01007 POWER ON DRIVE-CLiQ component required

Reaction: NONE

Acknowledge: NONE

Cause: A DRIVE-CLiQ component must be powered-up again (POWER ON) as, for example, the firmware was updated.
Alarm value (r2124, decimal):
Component number of the DRIVE-CLiQ component.

Remedy: Switch-out the power supply of the specified DRIVE-CLiQ component and switch-in again.

F01010 Drive type unknown

Reaction: NONE

Acknowledge: IMMEDIATELY

Cause: An unknown drive type was found.
Fault value (r0949, decimal):
Drive object number.

Remedy: Check the EEPROM data of the drive objects.

© Siemens AG, 2005. All rights reserved

F01015 Internal software error

Reaction: OFF2

Acknowledge: POWER ON

Cause: An internal software error has occurred.
Fault value (r0949, decimal):
Only for internal Siemens troubleshooting.

Remedy: - carry-out a POWER ON (power off/on) for all components.
- upgrade the firmware release.
- contact the Hotline.

A01016 (F) CompactFlash card changed

Reaction: NONE

Acknowledge: NONE

Cause: On the CompactFlash card, at least one file in the directory /SIEMENS/SINAMICS/ has been illegally changed with respect to that supplied from the factory. No changes are permitted in this directory.
Alarm value (r2124, decimal):
0: Checksum of one file is incorrect.
1: File missing.
2: Too many files.
3: Incorrect firmware version.
4: Incorrect checksum of the back-up file.
See also: r9925

Remedy: For the CompactFlash card, restore the status when originally supplied from the factory.
Note:
The file involved can be read-out using parameter r9925.
See also: r9926

Reaction upon F: OFF2

Acknowledge upon F: POWER ON

F01030 Monitoring master control: Sign-of-life failure PC

Reaction: OFF1

Acknowledge: IMMEDIATELY

Cause: For active PC master control, no sign-of-life was received within the monitoring time.
The master control was returned to the active BICO interconnection.

Remedy: Set the monitoring time higher at the PC/AOP or disable completely.
Notice:
The monitoring time should be set as short as possible. A long monitoring time means a late response when the communications fail!
The monitoring time is set in milliseconds.
- in the AOP using the Main menu -> Settings -> Control settings -> Timeout monitoring
- In STARTER using <Drive> -> Commissioning -> Control panel -> Button "Fetch master control" -> a window is displayed in which the monitoring time can be set.

A01035 (F) ACX: Run-up from the back-up files

Reaction: NONE

Acknowledge: NONE

Cause: When the Control Unit ran-up no complete data set from the parameter save files was found. The last time that the parameterization was saved, it was not completely carried-out. Instead, a backup data set or file is downloaded.
Alarm value (r2124, hexadecimal):
Only for internal Siemens troubleshooting.

Remedy: If you saved the project in STARTER, download your project again and save using the function "Copy RAM to ROM" or with p0977 = 1. This means that all of the parameter files are again completely written into the CompactFlash card.

Reaction upon F: A_INFEED: NONE (OFF2)
SERVO: NONE (OFF1, OFF2, OFF3)
VECTOR: NONE (OFF1, OFF2, OFF3)

Acknowledge upon F: IMMEDIATELY

© Siemens AG, 2005. All rights reserved

F01036 (A) ACX: Parameter back-up file missing

Reaction: A_INFEED: NONE (OFF2)
SERVO: NONE (OFF1, OFF2, OFF3)
VECTOR: NONE (OFF1, OFF2, OFF3)

Acknowledge: IMMEDIATELY

Cause: When downloading the device parameterization, a file associated with a drive object cannot be found. Neither a PSxxxyyy.ACX, a PSxxxyyy.NEW nor a PSxxxyyy.BAK exists on the CompactFlash card for this drive object.
Fault value (r0949, hexadecimal):
Only for internal Siemens troubleshooting.

Remedy: If you have saved your project data using STARTER, carry-out a new download for your project. Save using the function "Copy RAM to ROM" or with p0977 = 1 so that all of the parameter files are again completely written into the CompactFlash card.
If you have not saved the project data, then the system must be again commissioned for the first time.

Reaction upon A: NONE

Acknowledge upon A: NONE

F01037 (A) ACX: Re-naming parameter file not successful

Reaction: A_INFEED: NONE (OFF2)
SERVO: NONE (OFF1, OFF2, OFF3)
VECTOR: NONE (OFF1, OFF2, OFF3)

Acknowledge: IMMEDIATELY

Cause: The re-naming after saving a parameter-save file on the CompactFlash card was unsuccessful.
One of the files to be re-named had the "read only" attribute. The parameter-save files are saved on the CompactFlash card in the directory \USER\SINAMICS\DATA.
It is possible that the CompactFlash card is defective.
Fault value (r0949, hexadecimal):
The least-significant byte includes the drive object number (yyy in the file names PSxxxyyy.* or CAxxxyyy.* or CCxxxyyy.*).
Special cases: yyy = 0 --> consistency save file PSxxx000.*, yyy = 99 --> PROFIBUS parameter file PSxxx099.*
The next most significant byte includes the file number xxx.
The value for xxx depends on p0977 with which the save operation was started:
p0977 = 1, 10, 11, 12 --> xxx = 0, 10, 11, 12
The two most significant bytes are used for internal Siemens troubleshooting.

Remedy: Check whether one of the files to be overwritten has the attribute "read only" and change this file attribute into "writable". Check all of the files (PSxxxyyy.*, CCxxxyyy.*, CAxxxyyy.*) that belong to drive yyy designated in the fault value.
Replace the CompactFlash card.

Reaction upon A: NONE

Acknowledge upon A: NONE

© Siemens AG, 2005. All rights reserved

F01039 (A) ACX: Writing to the parameter back-up file was unsuccessful

Reaction: A_INFEED: NONE (OFF2)
SERVO: NONE (OFF1, OFF2, OFF3)
VECTOR: NONE (OFF1, OFF2, OFF3)

Acknowledge: IMMEDIATELY

Cause: Writing to at least one parameter-back-up file PSxxxyyy.acx on the CompactFlash card was unsuccessful.
- on the CompactFlash card in the directory /USER/SINAMICS/DATA/ at least one parameter back-up file has the "read only" file attribute and cannot be saved.
- the CompactFlash card is defective and cannot be written to.
Fault value (r0949, hexadecimal):
Byte 1: yyy in the file name PSxxxyyy.acx
yyy = 000 --> consistency back-up file
yyy = 001 ... 098 --> drive object number
yyy = 099 --> PROFIBUS parameter file
Byte 2: xxx in file name PSxxxyyy.acx
xxx = 000 --> data save started with p0977 = 1
xxx = 010 --> data save started with p0977 = 10
xxx = 011 --> data save started with p0977 = 11
xxx = 012 --> data save started with p0977 = 12
Byte 4, 3:
Only for internal Siemens troubleshooting.

Remedy: - check the file attribute of the files (PSxxxyyy.*, CAxxxyyy.*, CCxxxyyy.*) and, if required, change from "read only" to "writeable".
- replace the CompactFlash card.

Reaction upon A: NONE

Acknowledge upon A: NONE

F01040 Save parameter settings and carry-out a POWER ON

Reaction: OFF2

Acknowledge: POWER ON

Cause: A parameter was changed in the drive system that means that it is necessary to save the parameters and run-up again (e.g. p0110).

Remedy: - save the parameters (p0971/p0977).
- carry-out a POWER ON (power off/on) for all components.

F01041 Parameter save necessary

Reaction: NONE

Acknowledge: IMMEDIATELY

Cause: Defective or missing files were detected on the CompactFlash card at run-up.
Fault value (r0949, decimal):
-1: Source file cannot be opened.
-2: Source file cannot be read.
-3: Target directory cannot be set-up.
-4: Target file cannot be set-up/opened.
-5: Target file cannot be written into.
Additional values:
Only for internal Siemens troubleshooting.

Remedy: - save the parameters (p0977).
- download the project again into the drive unit.

© Siemens AG, 2005. All rights reserved

F01042 Parameter error during project download

Reaction: OFF2 (NONE, OFF1, OFF3)

Acknowledge: IMMEDIATELY

Cause: An error was detected when downloading a project using the commissioning (start-up) software (e.g. incorrect parameter value).
For the specified parameter, it was detected that dynamic limits were exceeded that could possibly depend on other parameters.
Fault value (r0949, decimal):
Low word: Parameter number (16 bits without sign)
Byte 3: Parameter index
Byte 4: Fault detection
0: Parameter number illegal.
1: Parameter value cannot be changed.
2: Lower or upper value limit exceeded.
3: Sub-index incorrect.
4: No array, no sub-index.
5: Data type incorrect.
6: Setting not permitted (only resetting).
7: Descriptive element cannot be changed.
9: Descriptive data not available.
11: No master control.
15: No text array present.
17: Task cannot be executed due to operating status.
20: Illegal value.
21: Response too long.
22: Parameter address illegal.
23: Format illegal.
24: Number of values not consistent.
25: Drive object does not exist.
101: Presently de-activated.
104: Illegal value.
107: Write access not permitted when controller enabled.
108: Units unknown.
109: Write access only in the commissioning state, encoder (p0010 = 4).
110: Write access only in the commissioning state, motor (p0010 = 3).
111: Write access only in the commissioning state, power module (p0010 = 2).
112: Write access only in the quick commissioning mode (p0010 = 1).
113: Write access only in the ready mode (p0010 = 0).
114: Write access only in the commissioning state, parameter reset (p0010 = 30).
115: Write access only in the Safety Integrated commissioning state (p0010 = 95).
116: Write access only in the commissioning state, technological application/units (p0010 = 5).
117: Write access only in the commissioning state (p0010 not equal to 0).
118: Write access only in the commissioning state, download (p0010 = 29).
119: Parameter may not be written into in download.
120: Write access only in the startup state, drive basis configuration (device: p0009 = 3).
121: Write access only in commissioning state Define drive type" (device: p0009 = 2).
122: Write access only in commissioning state Data set basic configuration" (device: p0009 = 4).
123: Write access only in commissioning state "Device Configuration" (device: p0009 = 1).
124: Write access only in commissioning state Device download" (device: p0009 = 29).
125: Write access only in commissioning state Device parameter reset" (device: p0009 = 30).
126: Write access only in commissioning state Device ready" (device: p0009 = 0).
127: Write access only in commissioning state Device" (device: p0009 not equal to 0).
129: Parameter may not be written into in download.
130: Transfer of the master control is inhibited via BI: p0806.
131: Required BICO interconnection not possible, because BICO output does not supply floating value
132: Free BICO interconnection inhibited via p0922.
133: Access method not defined.
200: Below the valid values.
201: Above the valid values.
202: Cannot be accessed from the Basic Operator Panel (BOP).
203: Cannot be read from the Basic Operator Panel (BOP).
204: Write access not permitted.

© Siemens AG, 2005. All rights reserved

Remedy: - enter the correct value into the specified parameter.
- identify the parameter that narrows (restricts) the limits of the specified parameter.

F01043 Fatal error when downloading a project

Reaction: OFF2 (OFF1, OFF3)

Acknowledge: IMMEDIATELY

Cause: A fatal error was detected when downloading a project using the commissioning (start-up) software.
Fault value (r0949, decimal):
1: Device status cannot be changed to Device Download (drive object ON?).
2: Drive object ID incorrect
3: A drive object that has already been deleted is deleted again.
4: Deletes drive object that has already been registered for generation.
5: Deletes a drive object that no longer exists.
6: Generating an undeleted drive object that already existed.
7: Regeneration of a drive object already registered for generation.
8: Maximum number of drive objects that can be generated exceeded.
9: Error while generating a device drive object.
10: Error while generating target topology parameters (p9902 and p9903).
11: Error when generating a drive object (global component).
12: Error when generating a drive object (drive component).
13: Unknown drive object type.
14: Drive status cannot be changed to Ready (p0947 and p0949).
15: Drive status cannot be changed to Drive Download.
16: Device status cannot be changed to Ready.
17: It is not possible to download the topology. The component wiring should be checked, taking into account the various messages/signals.
18: A new download is only possible if the factory settings are re-established for the drive unit.
19: The slot for the option module has been configured several times (e.g. CAN and COMM BOARD)
20: The configuration is inconsistent (e.g. CAN for Control Unit, however no CAN configured for drive objects - Active Line Module, servo or VECTOR).

Remedy: - use the actual version of the commissioning software.
- modify the offline project and carry-out a new download (e.g. compare the number of drive objects, motor, encoder, power module in the offline project and at the drive).
- change the drive system (is a drive rotating or is there a message/signal?).
- carefully note any other messages/signals and remove their cause.

F01044 CU CompactFlash: Message description incorrect

Reaction: OFF2

Acknowledge: POWER ON

Cause: An error was detected when loading the message descriptions (FDxxxyyy.ACX) saved on the CompactFlash card.
Fault value (r0949, hexadecimal):
Only for internal Siemens troubleshooting.

Remedy: Replace the CompactFlash card.

A01045 CU CompactFlash: Configuration data invalid

Reaction: NONE

Acknowledge: NONE

Cause: An invalid data type was detected when evaluating parameter files PSxxxyyy.ACX, PTxxxyyy.ACX, CAxxxyyy.ACX or CCxxxyyy.ACX, saved on the CompactFlash card.
Alarm value (r2124, hexadecimal):
Only for internal Siemens troubleshooting.

Remedy: Restore the factory setting using (p0976 = 1) and re-load the project into the drive unit. Operation without any restrictions is then possible.
After downloading the project, save the parameterization in STARTER using the function "Copy RAM to ROM" or with p0977 = 1. This means that the incorrect parameter files are overwritten on the CompactFlash card.

© Siemens AG, 2005. All rights reserved

A01046 (F) CU CompactFlash: Configuration data invalid

Reaction: NONE

Acknowledge: NONE

Cause: An invalid data type was detected when evaluating the parameter files PSxxxyyy.ACX, PTxxxyyy.ACX, CAxxxyyy.ACX or CCxxxyyy.ACX saved on the CompactFlash card.
Alarm value (r2124, hexadecimal):
Only for internal Siemens troubleshooting.

Remedy: Restore the factory setting using (p0976 = 1) and re-load the project into the drive unit. Operation without any restrictions is then possible.
After downloading the project, save the parameterization in STARTER using the function "Copy RAM to ROM" or with p0977 = 1 so that the incorrect parameter files are overwritten on the CompactFlash card.

Reaction upon F: A_INFEED: NONE (OFF2)
SERVO: NONE (OFF1, OFF2, OFF3)
VECTOR: NONE (OFF1, OFF2, OFF3)

Acknowledge upon F: IMMEDIATELY

A01047 (F) ACX: Parameter write error

Reaction: NONE

Acknowledge: NONE

Cause: When evaluating the parameters files PSxxxyyy.ACX, PTxxxyyy.ACX, CAxxxyyy.ACX or CCxxxyyy.ACX, saved on the CompactFlash card, a parameter value was not able to be transferred into the Control Unit memory.
Alarm value (r2124, hexadecimal):
Only for internal Siemens troubleshooting.

Remedy: Restore the factory setting using (p0976 = 1) and re-load the project into the drive unit. Operation without any restrictions is then possible.
After downloading the project, save the parameterization in STARTER using the function "Copy RAM to ROM" or with p0977 = 1. This means that the incorrect parameter files are overwritten on the CompactFlash card.

Reaction upon F: A_INFEED: NONE (OFF2)
SERVO: NONE (OFF1, OFF2, OFF3)
VECTOR: NONE (OFF1, OFF2, OFF3)

Acknowledge upon F: IMMEDIATELY

A01049 CU CompactFlash: It is not possible write into the file

Reaction: NONE

Acknowledge: NONE

Cause: It is not possible to write into a write-protective file (PSxxxxxx.acx). The write request was interrupted.
Alarm value (r2124, decimal):
Drive object number.

Remedy: Check whether the write-protected attribute has been set for the files on the CompactFlash card under .../USER/SINAMICS/DATA/... When required, remove write protection and save again (e.g. set p0971 to 1).

F01050 CompactFlash card and device not compatible

Reaction: A_INFEED: OFF2 (NONE, OFF1)
SERVO: OFF2 (NONE, OFF1, OFF3)
VECTOR: OFF2 (NONE, OFF1, OFF3)

Acknowledge: IMMEDIATELY

Cause: The CompactFlash card and the device type do not match (e.g. a CompactFlash card for SINAMICS S is inserted in SINAMICS G).

Remedy: - insert the matching CompactFlash card
- use the matching Control Unit or power module.

© Siemens AG, 2005. All rights reserved

F01051 **Drive object type is not available**

Reaction: NONE

Acknowledge: IMMEDIATELY

Cause: The drive object type in conjunction with the selected application-specific perspective is not available. The required descriptive file (PDxxxyyy.ACX) does not exist on the CompactFlash card.
Fault value (r0949, decimal):
Index of p0103 and p0107.
See also: p0103, r0103, p0107, r0107

Remedy: - for this drive object type (p0107), select a valid application-specific perspective (p0103).
- save the required descriptive file (PDxxxyyy.ACX) on the CompactFlash card.
See also: p0103, r0103, p0107, r0107

A01052 **CU: System overload calculates, for the complete target topologie**

Reaction: NONE

Acknowledge: NONE

Cause: A system overload was calculated based on a complete active target topology.
Alarm value (r2124, decimal):
2: Computation time load too high.
6: Cyclic computation time load too high.

Remedy: - reduce the sampling time.
- only use one data set (CDS, DDS).
- de-activate the function module.
- de-activate the drive object.
- remove the drive object from the target topology.
Note:
After executing the appropriate counter-measure, a new calculation must be initiated with p9974 = 1.

A01053 **CU: System overload measured**

Reaction: NONE

Acknowledge: NONE

Cause: A system overload was determined based on measured values.
Alarm value (r2124, decimal):
2: Computation time load too high.
6: Cyclic computation time load too high.
See also: r9976

Remedy: - reduce the sampling time.
- only use one data set (CDS, DDS).
- de-activate the function module.
- de-activate the drive object.
- remove the drive object from the target topology.

A01054 **Parameter save necessary**

Reaction: NONE

Acknowledge: NONE

Cause:

Remedy:

A01064 **Parameter save necessary**

Reaction: NONE

Acknowledge: NONE

Cause:

Remedy:

© Siemens AG, 2005. All rights reserved

A01090 **Non-volatile data save cannot be activated.**

Reaction: NONE

Acknowledge: NONE

Cause: Non-volatile data save cannot be activated as this is not supported by the CU.

Remedy:

A01100 **CU: CompactFlash card withdrawn**

Reaction: NONE

Acknowledge: NONE

Cause: The CompactFlash card (non-volatile memory) was withdrawn in operation.
Notice:
It is not permissible that the CompactFlash card is withdrawn or inserted under voltage.

Remedy: - power-down the drive system.
- re-insert the CompactFlash card that was withdrawn - this card must match the drive system.
- power-up the drive system again.

F01105 (A) **CU: Insufficient memory**

Reaction: OFF1

Acknowledge: IMMEDIATELY (POWER ON)

Cause: Two many functions, data sets or drives configured on this Control Unit.
Fault value (r0949, decimal):
Only for internal Siemens troubleshooting.

Remedy: - change the configuration on this Control Unit.
- use an additional Control Unit.

Reaction upon A: NONE

Acknowledge upon A: NONE

F01107 **CU: Save to CompactFlash card unsuccessful**

Reaction: NONE

Acknowledge: IMMEDIATELY

Cause: A data save on the CompactFlash card was not able to be successfully carried-out.
- CompactFlash card is defective.
- CompactFlash card does not have sufficient memory space.
Fault value (r0949, decimal):
-1: The file on the RAM was not able to be opened.
-2: The file on the RAM was not able to be read.
-3. A new directory was not able to be set-up on the CompactFlash card.
-4: A new file was not able to be set-up on the CompactFlash card.
-5: A new file was not able to be written onto the CompactFlash card.

Remedy: - try to save again.
- use another CompactFlash card.

F01110 **CU: More than one SINAMICS G on one Control Unit**

Reaction: NONE

Acknowledge: IMMEDIATELY

Cause: More than one SINAMICS G power module type is being operated from the Control Unit.
Fault value (r0949, decimal):
Number of the second drive with a SINAMICS G power module type.

Remedy: Only one SINAMICS G drive type is permitted.

© Siemens AG, 2005. All rights reserved

F01111	CU: SINAMICS S and G together on one Control Unit
Reaction:	NONE
Acknowledge:	IMMEDIATELY
Cause:	SINAMICS S and G drive units are being operated together on one Control Unit. Fault value (r0949, decimal): Number of the first drive object with a different power module type.
Remedy:	Only power modules of one particular drive type may be operated with one CU.

F01120 (A)	Terminal initialization has failed
Reaction:	OFF1 (OFF2)
Acknowledge:	IMMEDIATELY (POWER ON)
Cause:	An internal software error has occurred when initializing the terminal functions on the CU3xx, the TB30 or the TM31. Fault value (r0949, hexadecimal): Only for internal Siemens troubleshooting.
Remedy:	- carry-out a POWER ON (power off/on) for all components. - upgrade the firmware release. - contact the Hotline. - replace the Control Unit.
Reaction upon A:	NONE
Acknowledge upon A:	NONE

F01122 (A)	Frequency at the measuring probe input too high
Reaction:	OFF1 (OFF2)
Acknowledge:	IMMEDIATELY
Cause:	The frequency of the pulses at the measuring probe input is too high. Fault value (r0949, decimal): 1: DI/DO 9 (X122.8) 2: DI/DO 10 (X122.10) 4: DI/DO 11 (X122.11) 8: DI/DO 13 (X132.8) 16: DI/DO 14 (X132.10) 32: DI/DO 15 (X132.11) 1001: DI/DO 9 (X122.8) initialization error 1002: DI/DO 10 (X122.10) initialization error 1004: DI/DO 11 (X122.11) initialization error 1008: DI/DO 13 (X132.8) initialization error 1016: DI/DO 14 (X132.10) initialization error 1032: DI/DO 15 (X132.11) initialization error
Remedy:	Reduce the frequency of the pulses at the measuring probe input
Reaction upon A:	NONE
Acknowledge upon A:	NONE

F01150	CU: Number of instances of a drive object type have been exceeded
Reaction:	NONE
Acknowledge:	POWER ON
Cause:	The maximum permissible number of instances of a drive object type was exceeded. Fault value (r0949, decimal): Byte 1: Drive object type (p0107). Byte 2: Max. permissible number of instances for this drive object type. Byte 3: Actual number of instances for this drive object type.
Remedy:	- power-down the unit. - suitably restrict the number of instances of a drive object type by reducing the number of inserted components. - re-commission the unit.

© Siemens AG, 2005. All rights reserved

F01205 **CU: Time slice overflow**

Reaction: OFF2

Acknowledge: POWER ON

Cause: Insufficient processing time is available for the existing topology.
Fault value (r0949, hexadecimal):
Only for internal Siemens troubleshooting.

Remedy: - reduce the number of drives.
- increase the sampling times.

F01210 **CU: Basic clock cycle selection and DRIVE-CLiQ clock cycles do not match**

Reaction: NONE

Acknowledge: IMMEDIATELY

Cause: The parameter to select the basic clock cycle does not match the drive topology. Drives connected to the same DRIVE-CLiQ port of the Control Unit have been assigned different basic clock cycles.
Fault value (r0949, decimal):
The fault value specifies the parameter involved.
See also: p0111

Remedy: Only those drive objects may be connected to the same DRIVE-CLiQ socket of the Control Unit that should run with the same basic clock cycle. For example, Active Line Modules and Motor Modules should be inserted at different DRIVE-CLiQ ports as their basic clock cycles and current controller clock cycles are generally different.
See also: p0111

F01220 **CU: Bas clock cyc too low**

Reaction: NONE

Acknowledge: IMMEDIATELY

Cause: The parameter for the basic clock cycle is set too short for the number of connected drives.
Fault value (r0949, decimal):
The fault value specifies the parameter involved.
See also: p0110

Remedy: - increase the basic clock cycle.
- reduce the number of connected drives and start to re-commission the unit.
See also: p0110

F01221 **CU: Bas clock cyc too low**

Reaction: NONE

Acknowledge: IMMEDIATELY

Cause: The closed-loop control / monitoring cannot maintain the intended clock cycle.
The runtime of the closed-loop control/monitoring is too longer for the particular clock cycle or the computation time remaining in the system is not sufficient for the closed-loop control/monitoring.
Fault value (r0949, hexadecimal):
Only for internal Siemens troubleshooting.

Remedy: Increase the basic clock cycle of DRIVE-CLiQ communications.
See also: p0112

F01250 **CU: CU-EEPROM incorrect read-only data**

Reaction: NONE (OFF2)

Acknowledge: POWER ON

Cause: Error when reading the read-only data of the EEPROM in the Control Unit.
Fault value (r0949, decimal):
Only for internal Siemens troubleshooting.

Remedy: - carry-out a POWER ON.
- replace the Control Unit

© Siemens AG, 2005. All rights reserved

A01251 CU: CU-EEPROM incorrect read-write data

Reaction: NONE

Acknowledge: NONE

Cause: Error when reading the read-write data of the EEPROM in the Control Unit.
Alarm value (r2124, decimal):
Only for internal Siemens troubleshooting.

Remedy: For alarm value r2124 < 256, the following applies:
- carry-out a POWER ON.
- replace the Control Unit.

For alarm value r2124 >= 256, the following applies:
- delete (clear) the fault memory on the drive object on which the alarm occurred (p0952 = 0).
- as an alternative, delete (clear) the fault memories of all drive objects (p2147 = 1).
- replace the Control Unit.

F01255 CU: Opt. module EEPROM incorrect read-only data

Reaction: NONE (OFF2)

Acknowledge: POWER ON

Cause: Error when reading the read-only data of the EEPROM in the option module.
Fault value (r0949, decimal):
Only for internal Siemens troubleshooting.

Remedy: - carry-out a POWER ON.
- replace the Control Unit.

A01256 CU: Opt. module EEPROM incorrect read-write data

Reaction: NONE

Acknowledge: NONE

Cause: Error when reading the read-write data of the EEPROM in the option module.
Fault value (r0949, decimal):
Only for internal Siemens troubleshooting.

Remedy: - carry-out a POWER ON.
- replace the Control Unit.

F01303 DRIVE-CLiQ component does not support the required function

Reaction: OFF2

Acknowledge: IMMEDIATELY

Cause: A function requested by the Control Unit is not supported by a DRIVE-CLiQ component.
Fault value (r0949, decimal):
1: A component does not support the de-activation.
101: The Motor Module does not support an internal armature short-circuit.
102: The Motor Module does not support the de-activation.
201: The Sensor Module does not support actual value inversion (p0410.0 = 1) when using a Hall sensor (p0404.6 = 1) for the commutation.
202: The Sensor Module does not support parking/unparking.
203: The Sensor Module does not support the de-activation.
204: The firmware of this Terminal Module 15 (TM15) does not support the application TM15DI/DO.

Remedy: Upgrade the firmware of the DRIVE-CLiQ component involved.

© Siemens AG, 2005. All rights reserved

F01305 Topology: Component number missing

Reaction: NONE

Acknowledge: IMMEDIATELY

Cause: The component number from the topology was not parameterized (p0121 (for power module, refer to p0107), p0131 (for servo/VECTOR drives, refer to p0107), p0141, p0151, p0161).
Fault value (r0949, decimal):
The fault value includes the particular data set number.
The fault also occurs if speed encoders were configured (p0187 ... p0189), however, no component numbers exist for them.
In this case, the fault value includes the drive data set number plus 100 * encoder number (e.g. 3xx, if a component number was not entered into p0141 for the third encoder (p0189)).
See also: p0121, p0131, p0141, p0142, p0151, p0161, p0186, p0187, p0188, p0189

Remedy: Enter the missing component number or remove the component and restart commissioning.
See also: p0121, p0131, p0141, p0142, p0151, p0161, p0186, p0187, p0188, p0189

A01315 Drive object not ready for operation

Reaction: NONE

Acknowledge: NONE

Cause: For the active drive object involved, at least one activated component is missing.
Note:
All other active and operational drive objects can be in the "RUN" state.

Remedy: The alarm automatically disappears again with the following actions:
- de-activate the drive object involved (p0105 = 0).
- de-activate the components involved (p0125 = 0, p0145 = 0, p0155 = 0, p0165 = 0).
- re-insert the components involved.
See also: p0105, p0125, p0145

A01316 Drive object inactive and again ready for operation

Reaction: NONE

Acknowledge: NONE

Cause: If, when inserting a component of the target topology, an inactive, non-operational drive object becomes operational again. The associated parameter of the component is, in this case, set to "activate" (p0125, p0145, p0155, p0165).
Note:
This is the only message, that is displayed for a de-activated drive object.

Remedy: The alarm automatically disappears again with the following actions:
- activate the drive object involved (p0105 = 1).
- again withdraw the components involved.
See also: p0105

A01317 De-activated component again present

Reaction: NONE

Acknowledge: NONE

Cause: If a component of the target topology for an active drive object is inserted and the associated parameter of the component is set to "de-activate" (p0125, p0145, p0155, p0165).
Note:
This is the only message, that is displayed for a de-activated component.

Remedy: The alarm automatically disappears again with the following actions:
- activate the components involved (p0125 = 1, p0145 = 1, p0155 = 1, p0165 = 1).
- again withdraw the components involved.
See also: p0125, p0145

© Siemens AG, 2005. All rights reserved

A01318 BICO: De-activated interconnections present

Reaction: NONE

Acknowledge: NONE

Cause: An inactive drive object/a drive object that is not ready for operation, is again active/ready to run, r9498[0...29] and r9499[0...29] are not empty.
Alarm value (r2124, decimal):
Number of BICO interconnections to de-activated drive objects found.

Remedy: Re-establish the BICO interconnections using p9496 or delete the list of interconnections using p9496.
De-activate the drive object again.

A01320 Topology: Drive object number does not exist in configuration

Reaction: NONE

Acknowledge: NONE

Cause: A drive object number is missing in p0978
Alarm value (r2124, decimal):
Index of p0101 under which the missing drive object number can be determined.

Remedy: Set p0009 to 1 and change p0978:
Rules:
- p0978 must include all of the drive object numbers (p0101).
- it is not permissible that a drive object number is repeated.
- by entering a 0, the drive objects with PZD are separated from those without PZD.
- only 2 partial lists are permitted. After the second 0, all values must be 0.
- dummy drive object numbers (255) are only permitted in the first partial list.

A01321 Topology: Drive object number does not exist in configuration

Reaction: NONE

Acknowledge: NONE

Cause: p0978 contains a drive object number that does not exist.
Alarm value (r2124, decimal):
Index of p0978 under which the drive object number can be determined.

Remedy: Set p0009 to 1 and change p0978:
Rules:
- p0978 must include all of the drive object numbers (p0101).
- it is not permissible that a drive object number is repeated.
- by entering a 0, the drive objects with PZD are separated from those without PZD.
- only 2 partial lists are permitted. After the second 0, all values must be 0.
- dummy drive object numbers (255) are only permitted in the first partial list.

A01322 Topology: Drive object number present twice in configuration

Reaction: NONE

Acknowledge: NONE

Cause: A drive object number is present more than once in p0978.
Alarm value (r2124, decimal):
Index of p0978 under which the involved drive object number is located.

Remedy: Set p0009 to 1 and change p0978:
Rules:
- p0978 must include all of the drive object numbers (p0101).
- it is not permissible that a drive object number is repeated.
- by entering a 0, the drive objects with PZD are separated from those without PZD.
- only 2 partial lists are permitted. After the second 0, all values must be 0.
- dummy drive object numbers (255) are only permitted in the first partial list.

A01323 Topology: More than two part lists set-up

Reaction: NONE

Acknowledge: NONE

Cause: Partial lists are available more than twice in p0978. After the second 0, all must be 0.
Alarm value (r2124, decimal):
Index of p0978, under which the illegal value is located.

© Siemens AG, 2005. All rights reserved

Remedy: Set p0009 to 1 and change p0978:
Rules:
- p0978 must include all of the drive object numbers (p0101).
- it is not permissible that a drive object number is repeated.
- by entering a 0, the drive objects with PZD are separated from those without PZD.
- only 2 partial lists are permitted. After the second 0, all values must be 0.
- dummy drive object numbers (255) are only permitted in the first partial list.

A01324 Topology: Dummy drive object number incorrectly set-up

Reaction: NONE

Acknowledge: NONE

Cause: In p0978, dummy drive object numbers (255) are only permitted in the first partial list.
Alarm value (r2124, decimal):
Index of p0978, under which the illegal value is located.

Remedy: Set p0009 to 1 and change p0978:
Rules:
- p0978 must include all of the drive object numbers (p0101).
- it is not permissible that a drive object number is repeated.
- by entering a 0, the drive objects with PZD are separated from those without PZD.
- only 2 partial lists are permitted. After the second 0, all values must be 0.
- dummy drive object numbers (255) are only permitted in the first partial list.

A01330 Topology: Quick commissioning not possible

Reaction: NONE

Acknowledge: NONE

Cause: Unable to carry-out a quick commissioning. The existing actual topology does not fulfill the requirements.
Alarm value (r2124, hexadecimal):
The cause is in byte 1 supplementary information is included in byte 2 and the high word.
Byte 1 = 1:
For a component, illegal connections were detected.
- byte 2 = 1: For a Motor Module, more than one motor with DRIVE-CLIQ was detected.
- byte 2 = 2: For a motor with DRIVE-CLiQ, the DRIVE-CLiQ cable is not connected to a Motor Module.
- high word = preliminary component number of the component with illegal connection.

Byte 1 = 2:
The topology contains too many components of a particular type.
- byte 2 = 1: There is more than one master Control Unit.
- byte 2 = 2: There is more than 1 infeed (8 for a parallel circuit configuration).
- byte 2 = 3: There are more than 10 Motor Modules (8 for a parallel circuit configuration).
- byte 2 = 4: There are more than 9 encoders.
- byte 2 = 5: There are more than 8 Terminal Modules.
- byte 2 = 7: Component type unknown.
- byte 2 = 8: There are more than 6 drive slaves.
- byte 2 = 9: Connection of a drive slave not permitted.
- byte 2 = 10: No drive master available.
- byte 2 = 11: There is more than one motor with DRIVE-CLiQ for a parallel circuit.
- high word = not used.

Byte 1 = 3:
More than 16 components are connected at a DRIVE-CLiQ socket of the Control Unit.
- byte 2 = 0, 1, 2, 3 means e.g. detected at the DRIVE-CLiQ socket X100, X101, X102, X103.
- high word = not used.

Byte 1 = 4:
The number of components connected one after the other is greater than 125.
- byte 2 = not used.
- high word = preliminary component number of the 1st component found that resulted in the fault.

Byte 1 = 5:
The component is not permissible for SERVO.
- byte 2 = 1: SINAMICS G available.
- byte 2 = 2: Chassis available.
- high word = preliminary component number of the 1st component found that resulted in the fault.

© Siemens AG, 2005. All rights reserved

Byte 1 = 6:
For a component, illegal EEPROM data was detected. These must be corrected before the system continues to run-up.
- byte 2 = 1: The Order No. [MLFB] of the power module that was replaced includes a space retainer. The space retainer (*) must be replaced by a correct character.
- high word = preliminary component number of the component with illegal EEPROM data.
Byte 1 = 7:
The actual topology contains an illegal combination of components.
- byte 2 = 1: Active Line Module (ALM) and Basic Line Module (BLM).
- byte 2 = 2: Active Line Module (ALM) and Smart Line Module (SLM).
- byte 2 = 3: SIMOTION control (e.g. D445) and SINUMERIK components (e.g. NX15).
- byte 2 = 4: SINUMERIK control (e.g. NC SINUMERIK 730.net) and SIMOTION components (e.g. CX32).
- high word = not used.
Note:
Connection type and connection number are described in F01375.
See also: p0097, r0098, p0099

Remedy: - adapt the output topology to the permissible requirements.
- carry-out commissioning using the commissioning software.
- for motors with DRIVE-CLiQ, connect the power and DRIVE-CLiQ cable to the same Motor Module (single Motor Module: DRIVE-CLiQ at X202, double Motor Module: DRIVE-CLiQ from motor 1 (X1) to X202, from motor 2 (X2) to X203).
Re byte 1 = 6 and byte 2 = 1:
Correct the order number when commissioning using the commissioning software.
See also: p0097, r0098, p0099

A01331 Topology: Component not assigned to a drive object

Reaction: NONE

Acknowledge: NONE

Cause: A component is not assigned to a drive object.
- when commissioning, a component was not able to be automatically assigned to a drive object.
- the parameters for the data sets are not correctly set.
Alarm value (r2124, decimal):
Component number of the unassigned component.

Remedy: This component is assigned to a drive object.
Check the parameters for the data sets.
Examples:
- power module (p0121).
- motor (p0131, p0186).
- encoder interface (p0140, p0141, p0187 ... p0189).
- encoder (p0140, p0142, p0187 ... p0189).
- Terminal Module (p0151).
- option board (p0161).

F01340 Topology: Too many components on one line

Reaction: NONE

Acknowledge: IMMEDIATELY

Cause: For the selected communications clock cycle, too many DRIVE-CLiQ components are connected to one line of the Control Unit.
Fault value (r0949, hexadecimal):
xyy hex: x = fault cause, yy = component number or connection number.
1yy:
The communications clock cycle of the DRIVE-CLiQ connection on the CU is not sufficient for all read transfers.
2yy:
The communications clock cycle of the DRIVE-CLiQ connection on the CU is not sufficient for all write transfers.
3yy:
Cyclic communications is fully utilized.
4yy:
The DRIVE-CLiQ cycle starts before the earliest end of the application. An additional deadtime must be added to the control. Sign-of-life errors can be expected.
5yy:
Internal buffer overflow for net data of a DRIVE-CLiQ connection.

© Siemens AG, 2005. All rights reserved

6yy:
Internal buffer overflow for receive data of a DRIVE-CLiQ connection.
7yy:
Internal buffer overflow for send data of a DRIVE-CLiQ connection.

Remedy: Check the DRIVE-CLiQ connection:
Approximately the same number of components should be connected in series and operated at the DRIVE-CLiQ connections. This means that communication is uniformly distributed over several communication lines.
Re fault value = 1yy - 4yy in addition:
- increase the basic clock cycle (p0112).

F01355 Topology: Actual topology changed

Reaction: NONE

Acknowledge: IMMEDIATELY

Cause: The unit target topology p0099 does not correspond to the unit actual topology r0098.
The fault only occurs if the topology was commissioned using the automatic internal device mechanism and not using the commissioning software.
Fault value (r0949, decimal):
Only for internal Siemens troubleshooting.
See also: r0098, p0099

Remedy: One of the following counter-measures can be selected if no faults have occurred in the topology detection itself:
If commissioning was still not completed:
- carry-out a self-commissioning routine (starting from p0009 = 1).
general: Set p0099 to r0098, set p0009 to 0; for existing Motor Modules, this results in servo drives being automatically generated (refer to p0107).
or to generate servo drives: Set p0097 to 1, set p0009 to 0;
or to generate VECTOR drives: Set p0097 to 2, set p0009 to 0.
or to generate VECTOR drives with a parallel circuit configuration: Set p0097 to 12, set p0009 to 0.
In order to set configurations in p0108, before setting p0009 to 0, it is possible to first set p0009 to 2 and p0108 modified (the index corresponds to the drive object,also refer to p0107).
If commissioning was already completed:
- re-establish the original connections and re-connect power to the Control Unit.
- restore the factory setting for the complete equipment (all of the drives) and allow automatic self-commissioning again.
- change the device parameterization to match the connections (this is only possible using the commissioning software).
Notice:
Topology changes, that result in this fault being generated, cannot be accepted by the automatic function in the device, but must be transferred using the commissioning software and parameter download. The automatic function in the device only allows constant topology to be used. Otherwise, when the topology is changed, all of the previous parameter settings are lost and replaced by the factory setting.
See also: r0098

F01360 Topology: Actual topology is illegal

Reaction: NONE

Acknowledge: IMMEDIATELY

Cause: The detected actual topology is not permissible.
Fault value (r0949, hexadecimal):
Byte 1 (cause):
1: Too many components were detected at the Control Unit. The maximum permissible number of components is 199.
2: The component type of a component is not known. The preliminary component number is in the high word.
Note:
The drive system run-up is stopped. In this state, the drive control (closed-loop) cannot be enabled.

Remedy: Re fault value = 1:
Change the configuration. Connect less than 199 components to the Control Unit.
Re fault value = 2:
Remove the component with unknown component type.

A01361 Topology: Actual topology contains SINUMERIK and SIMOTION components

Reaction: NONE

Acknowledge: NONE

© Siemens AG, 2005. All rights reserved

Cause: The detected actual topology contains SINUMERIK and SIMOTION components.
Fault value (r0949, hexadecimal):
Byte 1: Component number of the component
Byte 2: Component class of the actual topology
Byte 3 (cause):
1: An NX10 or NX15 was connected to a SIMOTION control.
2: A CX32 was connected to a SINUMERIK control.
The drive system run-up is stopped. In this state, the drive control (closed-loop) cannot be enabled.

Remedy: Re fault value = 1:
Replace all NX10 or NX15 by a CX32.
Re fault value = 2:
Replace all CX32 by an NX10 or NX15

F01375 Topology: Actual topology duplicate connection between two components

Reaction: NONE

Acknowledge: IMMEDIATELY

Cause: When detecting the actual topology, a ring-type connection was detected.
Fault value (r0949, hexadecimal):
Low word: Preliminary component number of a component included in the ring
Byte 3: Component class
Byte 4: Connection number
Example:
Fault value = 33751339 dec = 203012B hex
Byte 4 = 02 hex = 2 dec, byte 3 = 03 hex = 3 dec, low word = 012B hex = 299 dec
Component class:
1: Control unit
2: Motor Module
3: Line Module
4: Sensor Module (SM)
5: Voltage Sensing Module (VSM)
6: Terminal Module (TM)
7: DMC20, repeater
8: CX32
49: DRIVE-CLiQ components (non-listed components)
50: Option slot (e.g. Terminal Board 30)
60: Encoder (e.g. EnDat)
70: Motor with DRIVE-CLiQ
Component type:
Precise designation within a component class (e.g. "SMC20").
Connection number:
Consecutive numbers, starting from zero, of the appropriate connection or slot (e.g. DRIVE-CLiQ connection X100 on the Control Unit has the connection number 0).

Remedy: Output the fault value and remove the specified connection.

F01380 Topology: Actual topology, defective EEPROM

Reaction: NONE

Acknowledge: POWER ON

Cause: When detecting the actual topology, a component with a defective EEPROM was detected.
Fault value (r0949, hexadecimal):
Low word:
Preliminary component number of the defective components.

Remedy: Output the fault value and remove the defected component.

© Siemens AG, 2005. All rights reserved

A01381 Topology: Comparison, power module shifted

Reaction: NONE

Acknowledge: NONE

Cause: The topology comparison has detected a power module in the actual topology that has been shifted with respect to the target topology.
Alarm value (r2124, hexadecimal):
Byte 1: Component number of the component shifted in the target topology.
The connection in the actual topology where the shifted component was detected, is described in bytes 2, 3 and 4.
Byte 2: Component class
Byte 3: Component number
Byte 4: Connection number
Note:
Component class and connection number are described in F01375.
The drive system run-up is stopped. In this state, the drive control (closed-loop) cannot be enabled.

Remedy: Adapting the topologies:
- undo the change to the actual topology by changing-over the DRIVE-CLiQ cables.
- commissioning software: Go online, upload the drive unit, adapt the topology offline and download the modified project.
- automatically remove the topology error (p9904).

A01382 Topology: Comparison, Sensor Module shifted

Reaction: NONE

Acknowledge: NONE

Cause: The topology comparison has detected a Sensor Module in the actual topology that has been shifted with respect to the target topology.
Alarm value (r2124, hexadecimal):
Byte 1: Component number of the component shifted in the target topology
The connection in the actual topology where the shifted component was detected, is described in bytes 2, 3 and 4.
Byte 2: Component class
Byte 3: Component number
Byte 4: Connection number
Note:
Component class and connection number are described in F01375.
The drive system run-up is stopped. In this state, the drive control (closed-loop) cannot be enabled.

Remedy: Adapting the topologies:
- undo the change to the actual topology by changing-over the DRIVE-CLiQ cables.
- commissioning software: Go online, upload the drive unit, adapt the topology offline and download the modified project.
- automatically remove the topology error (p9904).

A01383 Topology: Comparison, Terminal Module shifted

Reaction: NONE

Acknowledge: NONE

Cause: The topology comparison has detected a Terminal Module in the actual topology that has been shifted with respect to the target topology.
Alarm value (r2124, hexadecimal):
Byte 1: Component number of the component shifted in the target topology
The connection in the actual topology where the shifted component was detected, is described in bytes 2, 3 and 4.
Byte 2: Component class
Byte 3: Component number
Byte 4: Connection number
Note:
Component class and connection number are described in F01375.
The drive system run-up is stopped. In this state, the drive control (closed-loop) cannot be enabled.

Remedy: Adapting the topologies:
- undo the change to the actual topology by changing-over the DRIVE-CLiQ cables.
- commissioning software: Go online, upload the drive unit, adapt the topology offline and download the modified project.
- automatically remove the topology error (p9904).

© Siemens AG, 2005. All rights reserved

A01385 Topology: Comparison, CX32 shifted

Reaction: NONE

Acknowledge: NONE

Cause: The topology comparison has detected a controller extension 32 (CX32) in the actual topology that has been shifted with respect to the target topology.
Alarm value (r2124, hexadecimal):
Byte 1: Component number of the component shifted in the target topology
The connection in the actual topology where the shifted component was detected, is described in bytes 2, 3 and 4.
Byte 2: Component class
Byte 3: Component number
Byte 4: Connection number
Note:
Component class and connection number are described in F01375.
The drive system run-up is stopped. In this state, the drive control (closed-loop) cannot be enabled.

Remedy: Adapting the topologies:
- undo the change to the actual topology by changing-over the DRIVE-CLiQ cables.
- commissioning software: Go online, upload the drive unit, adapt the topology offline and download the modified project.
- automatically remove the topology error (p9904).

A01386 Topology: Comparison, DRIVE-CLiQ component shifted

Reaction: NONE

Acknowledge: NONE

Cause: The topology comparison has detected a DRIVE-CLiQ component in the actual topology that has been shifted with respect to the target topology.
Alarm value (r2124, hexadecimal):
Byte 1: Component number of the component shifted in the target topology
The connection in the actual topology where the shifted component was detected, is described in bytes 2, 3 and 4.
Byte 2: Component class
Byte 3: Component number
Byte 4: Connection number
Note:
Component class and connection number are described in F01375.
The drive system run-up is stopped. In this state, the drive control (closed-loop) cannot be enabled.

Remedy: Adapting the topologies:
- undo the change to the actual topology by changing-over the DRIVE-CLiQ cables.
- commissioning software: Go online, upload the drive unit, adapt the topology offline and download the modified project.
- automatically remove the topology error (p9904).

A01387 Topology: Comparison, option slot component shifted

Reaction: NONE

Acknowledge: NONE

Cause: The topology comparison has detected a option slot component in the actual topology that has been shifted with respect to the target topology.
Alarm value (r2124, hexadecimal):
Byte 1: Component number of the component shifted in the target topology
The connection in the actual topology where the shifted component was detected, is described in bytes 2, 3 and 4.
Byte 2: Component class
Byte 3: Component number
Byte 4: Connection number
Note:
Component class and connection number are described in F01375.
The drive system run-up is stopped. In this state, the drive control (closed-loop) cannot be enabled.

Remedy: Adapting the topologies:
- undo the change to the actual topology by changing-over the DRIVE-CLiQ cables.
- commissioning software: Go online, upload the drive unit, adapt the topology offline and download the modified project.
- automatically remove the topology error (p9904).

© Siemens AG, 2005. All rights reserved

A01388 Topology: Comparison, EnDat encoder shifted

Reaction: NONE

Acknowledge: NONE

Cause: The topology comparison has detected an EnDat encoder in the actual topology that has been shifted with respect to the target topology.
Alarm value (r2124, hexadecimal):
Byte 1: Component number of the component shifted in the target topology
The connection in the actual topology where the shifted component was detected, is described in bytes 2, 3 and 4.
Byte 2: Component class
Byte 3: Component number
Byte 4: Connection number
Note:
Component class and connection number are described in F01375.
The drive system run-up is stopped. In this state, the drive control (closed-loop) cannot be enabled.

Remedy: Adapting the topologies:
- undo the change to the actual topology by changing-over the DRIVE-CLiQ cables.
- commissioning software: Go online, upload the drive unit, adapt the topology offline and download the modified project.
- automatically remove the topology error (p9904).

A01389 Topology: Comparison, motor with DRIVE-CLiQ shifted

Reaction: NONE

Acknowledge: NONE

Cause: The topology comparison has detected a motor with DRIVE-CLiQ in the actual topology that has been shifted with respect to the target topology.
Alarm value (r2124, hexadecimal):
Byte 1: Component number of the component shifted in the target topology
The connection in the actual topology where the shifted component was detected, is described in bytes 2, 3 and 4.
Byte 2: Component class
Byte 3: Component number
Byte 4: Connection number
Note:
Component class and connection number are described in F01375.
The drive system run-up is stopped. In this state, the drive control (closed-loop) cannot be enabled.

Remedy: Adapting the topologies:
- undo the change to the actual topology by changing-over the DRIVE-CLiQ cables.
- commissioning software: Go online, upload the drive unit, adapt the topology offline and download the modified project.
- automatically remove the topology error (p9904).

A01416 Topology: Comparison, additional component in actual topology

Reaction: NONE

Acknowledge: NONE

Cause: The topology comparison has found a component in the actual topology which is not specified in the target topology.
The alarm value defines the connection at which the additional component was detected.
Alarm value (r2124, hexadecimal):
Byte 1: Component number
Byte 2: Component class
Byte 3: Connection number
Note:
Component class and connection number are described in F01375.

Remedy: Adapting the topologies:
- remove the additional component in the actual topology.
- download the target topology that matches the actual topology (commissioning software).

© Siemens AG, 2005. All rights reserved

A01420 Topology: Comparison, a component is different

Reaction: NONE

Acknowledge: NONE

Cause: The topology comparison has detected differences in the actual and target topologies in relation to one component.
There are differences in the electronic rating plate.
Alarm value (r2124, hexadecimal):
Byte 1: Component number of the component
Byte 2: Component class of the target topology
Byte 3: Component class of the actual topology
Byte 4 (cause):
1: Different component type
2: Different order number
3: Different manufacturer
4: Connection changed-over for a multi-component slave (e.g. double Motor Module) or defective EEPROM data in the electronic rating plate
5: A CX32 was replaced by an NX10 or NX15.
6: An NX10 or NX15 was replaced by a CX32.
Note:
Component class and component type are described in F01375.
The drive system run-up is stopped. In this state, the drive control (closed-loop) cannot be enabled.

Remedy: Adapting the topologies:
- check the component soft-wired connections against the hardware configuration of the drive unit in the commissioning software and correct differences.
- parameterize the topology comparison of all components (p9906).
- parameterize the topology comparison of one components (p9907, p9908).

A01421 Topology: Comparison, different components

Reaction: NONE

Acknowledge: NONE

Cause: The topology comparison has detected differences in the actual and target topologies in relation to one component.
The component class, the component type or the number of connections differ.
Alarm value (r2124, hexadecimal):
Byte 1: Component number of the component
Byte 2: Component class of the target topology
Byte 3: Component class of the actual topology
Byte 4 (cause):
1: Different component class
2: Different component type
3: Different order number
4: Different number of connections
Note:
Component class, component type and connection number are described in F01375.
The drive system run-up is stopped. In this state, the drive control (closed-loop) cannot be enabled.

Remedy: Check the component soft-wired connections against the hardware configuration of the drive unit in the commissioning software and correct differences.

A01425 Topology: Comparison, serial number of a component is different

Reaction: NONE

Acknowledge: NONE

Cause: The topology comparison has detected differences in the actual and target topologies in relation to one component.
The serial number is different.
Alarm value (r2124, hexadecimal):
Byte 1: Component number of the component
Byte 2: Component class
Byte 3: Number of differences
Note:
The component class is described in F01375.
The drive system run-up is stopped. In this state, the drive control (closed-loop) cannot be enabled.

© Siemens AG, 2005. All rights reserved

Remedy: Adapting the topologies:
- change over the actual topology to match the target topology.
- download the target topology that matches the actual topology (commissioning software).
Re byte 3:
Byte 3 = 1 --> can be acknowledged using p9904 or p9905.
Byte 3 > 1 --> can be acknowledged using p9905 and can be de-activated using p9906 or p9907/p9908.
See also: p9904, p9905, p9906, p9907, p9908

A01428 Topology: Comparison, connection of a component is different

Reaction: NONE

Acknowledge: NONE

Cause: The topology comparison has detected differences in the actual and target topologies in relation to one component.
A component was connected to another connection.
The different connections of a component are described in the alarm value:
Alarm value (r2124, hexadecimal):
Byte 1: Component number
Byte 2: Component class
Byte 3: Connection number in the actual topology
Byte 4: Connection number in the target topology
Note:
Component class and connection number are described in F01375.
The drive system run-up is stopped. In this state, the drive control (closed-loop) cannot be enabled.

Remedy: Adapting the topologies:
- change over the actual topology to match the target topology.
- download the target topology that matches the actual topology (commissioning software).
- automatically remove the topology error (p9904).
See also: p9904

A01429 Topology: Comparison, connection is different for more than component

Reaction: NONE

Acknowledge: NONE

Cause: A topology comparison has found differences between the actual and target topology for several components. A component was connected to another connection.
The different connections of a component are described in the alarm value:
Alarm value (r2124, hexadecimal):
Byte 1: Component number
Byte 2: Component class
Byte 3: Connection number in the actual topology
Byte 4: Connection number in the target topology
Note:
Component class and connection number are described in F01375.
The drive system run-up is stopped. In this state, the drive control (closed-loop) cannot be enabled.

Remedy: Adapting the topologies:
- change over the actual topology to match the target topology.
- download the target topology that matches the actual topology (commissioning software).
Note:
In the software, a double Motor Module behaves just like two separate DRIVE-CLiQ nodes. If a double Motor Module is re-inserted, this can result in several differences in the actual topology.

F01451 Topology: Target topology is invalid

Reaction: NONE

Acknowledge: IMMEDIATELY

Cause: An error has occurred when writing into the target topology.
The write operation was interrupted due to an invalid target topology.
Fault value (r0949, hexadecimal):
Only for internal Siemens troubleshooting.

Remedy: Reload the target topology using the commissioning software.

© Siemens AG, 2005. All rights reserved

F01470 Topology: Target topology ring connection

Reaction: NONE

Acknowledge: IMMEDIATELY

Cause: A ring-type connection was detected when writing into the target topology.
Fault value (r0949, hexadecimal):
Byte 1: Component number of a component included in the ring
Byte 2: Component class
Byte 3: Connection number
Note:
Component class and connection number are described in F01375.

Remedy: Read-out the fault value and remove one of the specified connections.
Then, download the target topology again using the commissioning software.

F01475 Topology: Target topology duplicate connection between two components

Reaction: NONE

Acknowledge: IMMEDIATELY

Cause: When writing the target topology, a duplicate connection between two components was detected.
Fault value (r0949, hexadecimal):
Byte 1: Component number of one of the components connected twice
Byte 2: Component class
Byte 3: Connection number 1 of the duplicate connection
Byte 4: Connection number 2 of the duplicate connection
Note:
Component class and connection number are described in F01375.

Remedy: Read-out the fault value and remove one of the two specified connections.
Then, download the target topology again using the commissioning software.

A01481 Topology: Comparison, power module missing in the actual topology

Reaction: NONE

Acknowledge: NONE

Cause: The topology comparison has detected a power module in the target topology that is not available in the actual topology.
Alarm value (r2124, decimal):
Component number of the additional target components.
Note:
The drive system run-up is stopped. In this state, the drive control (closed-loop) cannot be enabled.

Remedy: - delete the drive belonging to the power module in the commissioning software project and download the new configuration into the drive unit.
- check that the actual topology matches the target topology and if required, change over.
- check DRIVE-CLiQ cables for interruption and contact problems.

A01482 Topology: Comparison, Sensor Module missing in the actual topology

Reaction: NONE

Acknowledge: NONE

Cause: The topology comparison has detected a Sensor Module in the target topology that is not available in the actual topology.
Alarm value (r2124, decimal):
Component number of the additional target components.
Note:
The drive system run-up is stopped. In this state, the drive control (closed-loop) cannot be enabled.

Remedy: - re-configure the drive belonging to the Sensor Module in the commissioning software project (encoder configuration) and download the new configuration into the drive unit.
- delete the drive belonging to the Sensor Module in the commissioning software project and download the new configuration into the drive unit.
- check that the actual topology matches the target topology and if required, change over.
- check DRIVE-CLiQ cables for interruption and contact problems.

© Siemens AG, 2005. All rights reserved

A01483 Topology: Comparison, Terminal Module missing in the actual topology

Reaction: NONE

Acknowledge: NONE

Cause: The topology comparison has detected a Terminal Module in the target topology that is not available in the actual topology.
Alarm value (r2124, decimal):
Component number of the additional target components.
Note:
The drive system run-up is stopped. In this state, the drive control (closed-loop) cannot be enabled.

Remedy: - delete the Terminal Module in the commissioning software project and download the new configuration into the drive unit.
- check that the actual topology matches the target topology and if required, change over.
- check DRIVE-CLiQ cables for interruption and contact problems.

A01485 Topology: Comparison, CX32 in actual topology missing

Reaction: NONE

Acknowledge: NONE

Cause: The topology comparison has detected a controller extension 32 (CX32) in the target topology that is not available in the actual topology.
Alarm value (r2124, decimal):
Component number of the additional target components.
Note:
The drive system run-up is stopped. In this state, the drive control (closed-loop) cannot be enabled.

Remedy: - delete the CX32 in the commissioning software project and download the new configuration into the drive unit.
- check that the actual topology matches the target topology and if required, change over.
- check DRIVE-CLiQ cables for interruption and contact problems.

A01486 Topology: Comparison, DRIVE-CLiQ components missing in the the actual topology

Reaction: NONE

Acknowledge: NONE

Cause: The topology comparison has detected a DRIVE-CLiQ component in the target topology that is not available in the actual topology.
Alarm value (r2124, decimal):
Component number of the additional target components.
Note:
The drive system run-up is stopped. In this state, the drive control (closed-loop) cannot be enabled.

Remedy: - delete the drive belonging to this component in the commissioning software project and download the new configuration into the drive unit.
- re-configure the drive belonging to this component in the commissioning software project and download the new configuration into the drive unit.
- check that the actual topology matches the target topology and if required, change over.
- check DRIVE-CLiQ cables for interruption and contact problems.

A01487 Topology: Comparison, option slot components missing in the actual topology

Reaction: NONE

Acknowledge: NONE

Cause: The topology comparison has detected an option slot module in the target topology that is not available in the actual topology.
Alarm value (r2124, decimal):
Component number of the additional target components.
Note:
The drive system run-up is stopped. In this state, the drive control (closed-loop) cannot be enabled.

Remedy: - delete the option board in the commissioning software project and download the new configuration into the drive unit.
- re-configure the drive unit in the commissioning software project and download the new configuration into the drive unit.
- check that the actual topology matches the target topology and if required, change over.

© Siemens AG, 2005. All rights reserved

A01488 Topology: Comparison, EnDat encoder missing in the actual topology

Reaction: NONE

Acknowledge: NONE

Cause: The topology comparison has detected an EnDat encoder in the target topology that is not available in the actual topology.
Alarm value (r2124, decimal):
Component number of the additional target components.
Note:
The drive system run-up is stopped. In this state, the drive control (closed-loop) cannot be enabled.

Remedy: - re-configure the drive belonging to the encoder in the commissioning software project (encoder configuration) and download the new configuration into the drive unit.
- delete the drive belonging to the encoder in the commissioning software project and download the new configuration into the drive unit.
- check that the actual topology matches the target topology and if required, change over.

A01489 Topology: Comparison, motor with DRIVE-CLiQ missing in the actual topology

Reaction: NONE

Acknowledge: NONE

Cause: The topology comparison has detected a motor with DRIVE-CLiQ in the target topology that is not available in the actual topology.
Alarm value (r2124, decimal):
Component number of the additional target components.
Note:
The drive system run-up is stopped. In this state, the drive control (closed-loop) cannot be enabled.

Remedy: - re-configure the drive belonging to this motor in the commissioning software project and download the new configuration into the drive unit.
- delete the drive belonging to this motor in the commissioning software project and download the new configuration into the drive unit.
- check that the actual topology matches the target topology and if required, change over.
- check DRIVE-CLiQ cables for interruption and contact problems.

F01505 (A) BICO: Interconnection cannot be established

Reaction: NONE

Acknowledge: IMMEDIATELY

Cause: A PROFIBUS telegram has been set (p0922).
An interconnection contained in the telegram, was not able to be established.
Fault value (r0949, decimal):
Parameter receiver that should be changed.

Remedy: Establish another interconnection.

Reaction upon A: NONE

Acknowledge upon A: NONE

F01506 (A) BICO: No standard telegram

Reaction: NONE

Acknowledge: IMMEDIATELY

Cause: The standard telegram in p0922 is not maintained and therefore p0922 is set to 999.
Fault value (r0949, decimal):
BICO parameter for which the write attempt was unsuccessful.

Remedy: Again set the required standard telegram (p0922).

Reaction upon A: NONE

Acknowledge upon A: NONE

© Siemens AG, 2005. All rights reserved

F01507 (N, A) BICO: Interconnections to inactive objects present

Reaction: OFF2 (DCBRAKE, ENCODER, NONE, OFF1, OFF3, STOP1, STOP2)

Acknowledge: IMMEDIATELY

Cause: There are BICO interconnections as signal drain from a drive object that is either inactive/not operational.
The BI/CI parameters involved are listed in r9498.
The associated BO/CO parameters are listed in r9499.
The list of the BICO interconnections to other drive objects is displayed in r9491 and r9492 of the de-activated drive object.
Note:
r9498 and r9499 are only written into, if p9495 is not set to 0.
Alarm value (r2124, decimal):
Number of BICO interconnections found to inactive drive objects.
See also: r9491, r9492, r9498, r9499

Remedy: - set all open BICO interconnections centrally to the factory setting with p9495 = 2.
- make the non-operational drive object active/operational again (re-insert or activate components).

Reaction upon N: NONE

Acknowledge upon N: NONE

Reaction upon A: NONE

Acknowledge upon A: NONE

F01510 BICO: Signal source is not float type

Reaction: NONE

Acknowledge: IMMEDIATELY

Cause: The selected connector output does not have the correct data type. This interconnection is not established.
Fault value (r0949, decimal):
Parameter number to which an interconnection should be made (connector output).

Remedy: Interconnect this connector input with a connector output having a float data type.

F01511 (A) BICO: Interconnection between various normalizations

Reaction: NONE

Acknowledge: IMMEDIATELY

Cause: The requested interconnection was set up. However, a conversion is made between the BICO output and BICO input using the reference values.
- the BICO output has different normalized units than the BICO input.
- message only for interconnections within a drive object.
Message during commissioning and download inactive.
Example:
The BICO output has, as normalized unit, voltage and the BICO input has current.
This means that the factor p2002 (contains the reference value for current) / p2001 (contains the reference value for voltage) is calculated between the BICO output and BICO input.
Fault value (r0949, decimal):
Parameter number of the BICO input (signal receiver).

Remedy: No correction needed.

Reaction upon A: NONE

Acknowledge upon A: NONE

F01512 BICO: No normalization available

Reaction: A_INFEED: OFF2 (OFF1)
SERVO: OFF2
VECTOR: OFF2

Acknowledge: POWER ON

Cause: An attempt was made to determine a conversion factor for a normalization that does not exist.
Fault value (r0949, decimal):
Unit (e.g. corresponding to SPEED) for which an attempt was made to determine a factor.

Remedy: Apply normalization or check the transfer value.

© Siemens AG, 2005. All rights reserved

F01513 (A) BICO: Spanning DO between different normalizations

Reaction: NONE

Acknowledge: IMMEDIATELY

Cause: The requested interconnection was set up. However, a conversion is made between the BICO output and BICO input using the reference values.
An interconnection is made between different drive objects and the BICO output has different normalized units than the BICO input or the normalized units are the same but the reference values are different.
Example:
The BICO output has, as standard unit, voltage and the BICO input has current; both lie in different drive objects. This means that the factor p2002 (contains the reference value for current) / p2001 (contains the reference value for voltage) is calculated between the BICO output and BICO input.
Fault value (r0949, decimal):
Parameter number of the BICO input (signal receiver).

Remedy: No correction needed.

Reaction upon A: NONE

Acknowledge upon A: NONE

A01514 (F) BICO: Error when writing during a reconnect

Reaction: NONE

Acknowledge: NONE

Cause: During a reconnect operation (e.g. at run-up or download - but cannot occur in normal operation) a parameter was not able to be written into.
Example:
When writing to a double word BICO input in the second index, the memory areas overlap (e.g. p8861). The parameter is then reset to the factory setting.
Alarm value (r2124, decimal):
Parameter number of the BICO input (signal receiver).

Remedy: None necessary.

Reaction upon F: NONE

Acknowledge upon F: IMMEDIATELY

A01590 (F) Drive: Motor maintenance interval expired

Reaction: NONE

Acknowledge: NONE

Cause: The selected service/maintenance interval for this motor was reached.
Alarm value (r2124, decimal):
Motor data set number.
See also: p0650, p0651

Remedy: Carry-out service/maintenance and reset the service/maintenance interval (p0651).

Reaction upon F: NONE

Acknowledge upon F: IMMEDIATELY

F01600 SI CU: STOP A initiated

Reaction: OFF2

Acknowledge: IMMEDIATELY (POWER ON)

Cause: The drive-based "Safety Integrated" function in the Control Unit (CU) has detected a fault and initiated a STOP A (pulse cancellation via the safety shutdown path of the Control Unit).
- forced checking procedure of the safety shutdown path of the Control Unit unsuccessful.
- subsequent response to fault F01611 (defect in a monitoring channel).
Fault value (r0949, decimal):
0: Stop request from the Motor Module.
1005: Pulses cancelled although SH not selected and there is not internal STOP A present.
1010: Pulses enabled although SH is selected or an internal STOP A is present.
1015: Feedback of the safe pulse cancellation for Motor Modules connected in parallel are different.
9999: Subsequent response to fault F01611.

© Siemens AG, 2005. All rights reserved

Remedy:
- select safe standstill and then de-select again.
- replace the Motor Module involved.

Re fault value = 9999:
- carry-out diagnostics for fault F01611.

Note:
CU: Control unit
MM: Motor Module
SH: Safe standstill
SI: Safety Integrated

F01611 SI CU: Defect in a monitoring channel

Reaction: NONE (OFF1, OFF2, OFF3)

Acknowledge: IMMEDIATELY (POWER ON)

Cause: The drive-based "Safety Integrated" function in the Control Unit (CU) has detected a fault in the crosswise data comparison between the CU and Motor Module (MM) and initiated a STOP F.
As a result of this fault, after the parameterized transition has expired (p9658), fault F01600 (SI CU: STOP A initiated) is output.
Fault value (r0949, decimal):
0: Stop request from the Motor Module.
1 to 999:
Number of the crosswise compared data that resulted in this fault.
1: SI monitoring clock cycle (r9780, r9880).
2: SI enable safety functions (p9601, p9801).
3: SI SGE changeover tolerance time (p9650, p9850).
4: SI transition period STOP F to STOP A (p9658, p9858).
5: SI enable safe brake control (p9602, p9802).
6: SI motion enable, safety-relevant functions (p9501, internal value). This number is also displayed in r9795.
1000: Watchdog timer has expired. Within the time of approx. 5 * p9650 too many switching operations have occurred at terminal EP of the Motor Module.
1001, 1002: Initialization error, change timer / check timer.
2000: Status of the SH terminals on the Control Unit and Motor Module are different.
2001: Feedback signal for safe pulse cancellation on the Control Unit and Motor Module are different.
2004: Status of the SH selection for modules connected in parallel are different.
2005: Feedback signal of the safe pulse cancellation on the Control Unit and Motor Modules connected in parallel are different.

Remedy:
Re fault value = 1 to 999:
- check the crosswise compared data that resulted in a STOP F.
- carry-out a POWER ON (power off/on) for all components.
- upgrade the Motor Module software.
- upgrade the Control Unit software.

Re fault value = 1000:
- check the EP terminal at the Motor Module (contact problems).

Re fault value = 1001, 1002:
- carry-out a POWER ON (power off/on) for all components.
- upgrade the Motor Module software.
- upgrade the Control Unit software.

Re fault value = 2000, 2001, 2004, 2005:
- check the tolerance time SGE changeover and if required, increase the value (p9650, p9850).
- check the wiring of the safety-relevant inputs (SGE) (contact problems).
- replace the Motor Module involved.

Note:
CU: Control unit
EP: Enable Pulses (pulse enable)
MM: Motor Module
SGE: Safety-relevant input
SH: Safe standstill
SI: Safety Integrated

© Siemens AG, 2005. All rights reserved

N01620 (F, A) SI CU: Safe standstill active

Reaction: NONE

Acknowledge: NONE

Cause: The "safe standstill" function has been selected on the Control Unit (CU) and is active.
Note:
This message does not result in a safety stop response.

Remedy: None necessary.
Note:
CU: Control unit
SI: Safety Integrated

Reaction upon F: OFF2

Acknowledge upon F: IMMEDIATELY (POWER ON)

Reaction upon A: NONE

Acknowledge upon A: NONE

F01625 SI CU: Sign-of-life error in safety data

Reaction: OFF2

Acknowledge: IMMEDIATELY (POWER ON)

Cause: The drive-based "Safety Integrated" function in the Control Unit (CU) has detected an error in the sign-of-life of the safety data between the CU and Motor Module (MM) and initiated a STOP A.
- there is either a DRIVE-CLiQ communications error or communications have failed.
- a time slice overflow of the safety software has occurred.
Fault value (r0949, decimal):
Only for internal Siemens troubleshooting.

Remedy: - select safe standstill and then de-select again.
- carry-out a POWER ON (power off/on) for all components.
- check whether there is a DRIVE-CLiQ communications error between the Control Unit and the Motor Module involved and if required, carry-out a diagnostics routine for the faults identified.
- de-select all drive functions that are not absolutely necessary.
- reduce the number of drives.
- check the electrical cabinet design and cable routing for EMC compliance
Note:
CU: Control unit
MM: Motor Module
SI: Safety Integrated

F01630 SI CU: Brake control defective

Reaction: OFF2

Acknowledge: IMMEDIATELY (POWER ON)

Cause: The drive-based "Safety Integrated" function in the Control Unit (CU) has detected a brake control fault and initiated a STOP A.
- no motor holding brake connected.
- the motor holding brake control on the Motor Module is faulty.
- a DRIVE-CLiQ communications error has occurred between the Control Unit and the Motor Module involved.
Fault value (r0949, decimal):
10: No brake connected or fault in the Motor Module brake control circuit ("open brake" operation).
11: Defect in the brake control circuit of the Motor Module ("brake open" operation).
20: Short-circuit in the brake winding or fault in the brake control circuit of the Motor Module ("brake open" state).
30: No brake connected, short-circuit in the brake winding or fault in the Motor Module brake control circuit ("close brake" operation).
31: Defect in the brake control circuit of the Motor Module ("close brake" operation).
40: Defect in the brake control circuit of the Motor Module ("brake closed" state).
50: Defect in the brake control circuit of the Motor Module or communications fault between the Control Unit and the Motor Module (brake control diagnostics).

© Siemens AG, 2005. All rights reserved

Remedy: - select safe standstill and then de-select again.
- check the motor holding brake connection.
- check the function of the motor holding brake.
- check whether there is a DRIVE-CLiQ communications error between the Control Unit and the Motor Module involved and if required, carry-out a diagnostics routine for the faults identified.
- check the electrical cabinet design and cable routing for EMC compliance
- replace the Motor Module involved.
Note:
CU: Control unit
MM: Motor Module
SI: Safety Integrated

F01649 SI CU: Internal software error

Reaction: OFF2

Acknowledge: IMMEDIATELY (POWER ON)

Cause: An internal error in the Safety Integrated software on the Control Unit has occurred.
Note:
This fault results in a STOP A that cannot be acknowledged.
Fault value (r0949, hexadecimal):
Only for internal Siemens troubleshooting.

Remedy: - carry-out a POWER ON (power off/on) for all components.
- re-commission the "Safety Integrated" function and carry-out a POWER ON.
- upgrade the Control Unit software.
- contact the Hotline.
- replace the Control Unit.
Note:
CU: Control unit
MM: Motor Module
SI: Safety Integrated

F01650 SI CU: Acceptance test required

Reaction: OFF2

Acknowledge: IMMEDIATELY (POWER ON)

Cause: The drive-based "Safety Integrated" function in the Control Unit requires an acceptance test.
Note:
This fault results in a STOP A that can be acknowledged.
Fault value (r0949, decimal):
130: No safety parameters available for the Motor Module.
1000: Reference and actual checksum on the Control Unit are not identical (run-up).
- at least one checksum-checked piece of data is defective.
2000: Reference and actual checksum on the Control Unit are not identical (commissioning mode).
- reference checksum incorrectly entered into the Control Unit (p9799 not equal to r9798).
2001: Reference and actual checksum on the Motor Module are not identical (commissioning mode).
- reference checksum incorrectly entered into the Motor Module (p9899 not equal to r9898).
2002: Enable of safety-related functions between the Control Unit and Motor Module differ (p9601 not equal to p9801).
2003: Acceptance test is required as a safety parameter has been changed.
2004: An acceptance test is required because a project with enabled safety-functions has been downloaded.
2010: Safe brake control is enabled differently the Control Unit and Motor Module (p9602 not equal to p9802).
2020: Error when saving the safety parameters for the Motor Module.
9999: Subsequent response of another safety-related fault that occurred at run-up that requires an acceptance test.

© Siemens AG, 2005. All rights reserved

Remedy: Re fault value = 130:
- carry-out safety commissioning routine.
Re fault value = 1000:
- again carry-out safety commissioning routine.
- replace the CompactFlash card.
Re fault value = 2000:
- check the safety parameters in the Control Unit and adapt the reference checksum (p9799).
Re fault value = 2001:
- check the safety parameters in the Motor Module and adapt the reference checksum (p9899).
Re fault value = 2002:
- enable the safety-related functions on the Control Unit and check on the Motor Module (p9601 = p9801).
Re fault value = 2003, 2004:
- Carry-out an acceptance test and generate an acceptance report. The procedure when carrying-out an acceptance test as well as an example of the acceptance report are provided in the documentation for SINAMICS Safety Integrated.
Re fault value = 2010:
- enable the safe brake control in the Control Unit and check on the Motor Module (p9602 = p9802).
Re fault value = 2020:
- again carry-out safety commissioning routine.
- replace the CompactFlash card.
Re fault value = 9999:
- carry-out diagnostics for the other safety-related fault that is present.
Note:
CU: Control unit
MM: Motor Module
SI: Safety Integrated
See also: p9799, p9899

F01651 SI CU: Synchronization safety time slices unsuccessful

Reaction: OFF2

Acknowledge: IMMEDIATELY (POWER ON)

Cause: The "Safety Integrated" function requires a synchronization of the safety time slices between the Control Unit (CU) and Motor Module (MM) and between the Control Unit and the higher-level control. This synchronization routine was not successful.
Note:
This fault results in a STOP A that cannot be acknowledged.
Fault value (r0949, decimal):
Only for internal Siemens troubleshooting.

Remedy: - carry-out a POWER ON (power off/on) for all components.
- upgrade the Motor Module software.
- upgrade the Control Unit software.
- upgrade the software of the higher-level control.
Note:
CU: Control unit
MM: Motor Module
SI: Safety Integrated

© Siemens AG, 2005. All rights reserved

F01652 SI CU: Monitoring clock cycle not permissible

Reaction: OFF2

Acknowledge: IMMEDIATELY (POWER ON)

Cause: One of the Safety Integrated monitoring clock cycles is not permissible:
- the drive-based monitoring clock cycle cannot be maintained due to the communication conditions required in the system.
- the monitoring clock cycle for safe motion monitoring functions with the higher-level control is not permissible (p9500).
Note:
This fault results in a STOP A that cannot be acknowledged.
Fault value (r0949, decimal):
- for enabled drive-based SI monitoring (p9601/p9801 > 0):
Minimum setting for the monitoring clock cycle (in μs).
- with the motion monitoring function enabled (p9501 > 0):
100: No matching monitoring clock cycle was able to be found.
101: The monitoring clock cycle is not an integer multiple of the position controller clock cycle.
102: An error has occurred when transferring the DP clock cycle to the Motor Module (MM).
103: An error has occurred when transferring the DP clock cycle to the Sensor Module.

Remedy: For enabled drive-based SI monitoring (p9601/p9801 > 0):
- upgrade the Control Unit software.
For enabled motion monitoring function (p9501 > 0):
- correct the monitoring clock cycle (p9500) and carry-out POWER ON.
Note:
CU: Control unit
MM: Motor Module
SI: Safety Integrated

F01655 SI CU: Align monitoring functions

Reaction: OFF2

Acknowledge: IMMEDIATELY (POWER ON)

Cause: An error has occurred when aligning the Safety Integrated monitoring functions on the Control Unit (CU) and Motor Module (MM). Control unit and Motor Module were not able to determine a common set of supported SI monitoring functions.
- there is either a DRIVE-CLIQ communications error or communications have failed.
- Safety Integrated software releases on the Control Unit and Motor Module are not compatible with one another.
Note:
This fault results in a STOP A that cannot be acknowledged.
Fault value (r0949, hexadecimal):
Only for internal Siemens troubleshooting.

Remedy: - carry-out a POWER ON (power off/on) for all components.
- upgrade the Motor Module software.
- upgrade the Control Unit software.
- check the electrical cabinet design and cable routing for EMC compliance
Note:
CU: Control unit
MM: Motor Module
SI: Safety Integrated

F01656 SI CU: Incorrect Motor Module parameter

Reaction: OFF2

Acknowledge: IMMEDIATELY (POWER ON)

Cause: When accessing the Safety Integrated parameters for the Motor Module (MM) on the CompactFlash card, an error has occurred.
Note:
This fault results in a STOP A that can be acknowledged.
Fault value (r0949, decimal):
129: Safety parameters for the Motor Module corrupted.
131: Internal Motor Module software error.
132: Communication errors when uploading or downloading the safety parameters for the Motor Module.
255: Internal software error on the Control Unit.

© Siemens AG, 2005. All rights reserved

Remedy: - re-commission the safety functions.
- upgrade the Control Unit software.
- upgrade the Motor Module software.
- replace the CompactFlash card.
Re fault value = 132:
- check the electrical cabinet design and cable routing for EMC compliance
Note:
CU: Control unit
MM: Motor Module
SI: Safety Integrated

F01659 SI CU: Write request for parameter rejected

Reaction: OFF2

Acknowledge: IMMEDIATELY (POWER ON)

Cause: The write request for one or several Safety Integrated parameters on the Control Unit (CU) was rejected.
Note:
This fault does not result in a safety stop response.
Fault value (r0949, decimal):
1: The Safety Integrated password is not set.
2: It was selected that the drive parameters are reset. However, the Safety Integrated parameters cannot be reset, as Safety Integrated is presently enabled.
3: The interlocked SH input is in the simulation mode.
10: An attempt was made to enable the SH function although this cannot be supported.
11: An attempt was made to enable the SBC function although this cannot be supported.
12: An attempt was made to enable the SBC function although this cannot be supported for a parallel circuit configuration.
13: An attempt was made to enable the safe motion monitoring function with the higher-level control, although this cannot be supported.
See also: p0970, p3900, r9771, r9871

Remedy: Re fault value = 1:
- set the Safety Integrated password (p9761).
Re fault value = 2:
- inhibit Safety Integrated and again reset the drive parameters.
Re fault value = 3:
- simulation mode for the digital input ended (p0795).
Re fault value = 10, 11, 12, 13:
- check whether there are faults in the safety function alignment between the Control Unit and the Motor Module involved (F01655, F30655) and if required, carry-out diagnostics for the faults involved.
- use a Motor Module that supports the function "safe standstill" or "safe brake control".
- upgrade the Motor Module software.
- upgrade the Control Unit software.
Note:
CU: Control unit
SBC: Safe brake control
SH: Safe standstill
SI: Safety Integrated
See also: p9501, p9601, p9620, p9761, p9801

F01660 SI CU: Safety-related functions not supported

Reaction: OFF2

Acknowledge: IMMEDIATELY (POWER ON)

Cause: The Motor Module (MM) does not support the safety-related functions (e.g. the Motor Module version is not the correct one). Safety Integrated cannot be commissioned.
Note:
This fault results in a STOP A that cannot be acknowledged.

Remedy: - use a Motor Module that supports the safety-related functions.
- upgrade the Motor Module software.
Note:
CU: Control unit
MM: Motor Module
SI: Safety Integrated

© Siemens AG, 2005. All rights reserved

F01670 SI motion: Invalid parameterization, Sensor Module

Reaction: OFF2

Acknowledge: IMMEDIATELY (POWER ON)

Cause: The parameterization of a Sensor Module used for Safety Integrated is not permissible.
Note:
This fault results in a STOP A that cannot be acknowledged.
Fault value (r0949, decimal):
1: No encoder was parameterized for Safety Integrated.
2: An encoder was parameterized for Safety Integrated that does not have an A/B track (sinusoidal/cosinusoidal).
3: The encoder data set selected for Safety Integrated is still not valid.
4: A communications error to the encoder has occurred.
10: For an encoder used for Safety Integrated, not all of the Drive Data Sets (DDS) are assigned to the same Encoder Data Set (EDS) (p0187 ... p0189).

Remedy: Re fault value = 1, 2:
- use and parameterize an encoder that Safety Integrated supports (encoder with track A/B sinusoidal, p0404.4 = 1).
Re fault value = 3:
- check whether the drive or drive commissioning function is active and if required, exit this (p0009 = p00010 = 0), save the parameters (p0971 = 1) and carry-out a POWER ON
Re fault value = 4:
- check whether there is a DRIVE-CLiQ communications error between the Control Unit and the Sensor Module involved and if required, carry-out a diagnostics routine for the faults identified.
Re fault value = 10:
- align the EDS assignment of all of the encoders used for safety integrated (p0187 ... p0189).
Note:
SI: Safety Integrated

F01671 SI motion: Error when parameterizing the encoder

Reaction: OFF2

Acknowledge: IMMEDIATELY (POWER ON)

Cause: The parameterization of the encoder used by Safety Integrated is different than the parameterization of the standard encoder.
Fault value (r0949, decimal):
Parameter number of the non-corresponding safety parameter.

Remedy: Align the encoder parameterization between the safety encoder and the standard encoder.
Note:
SI: Safety Integrated

F01672 SI motion: Motor Module software incompatible

Reaction: OFF2

Acknowledge: IMMEDIATELY (POWER ON)

Cause: The existing Motor Module software does not support the safe motion monitoring function with the higher-level control.
Note:
This fault results in a STOP A that cannot be acknowledged.
Fault value (r0949, decimal):
Only for internal Siemens troubleshooting.

Remedy: - check whether there are faults in the safety function alignment between the Control Unit and the Motor Module involved
(F01655, F30655) and if required, carry-out the appropriate diagnostics routine for the particular faults.
- use a Motor Module that supports safe motion monitoring
- upgrade the Motor Module software.
Note:
SI: Safety Integrated

© Siemens AG, 2005. All rights reserved

F01673 SI motion: Sensor Module software incompatible

Reaction: OFF2

Acknowledge: IMMEDIATELY (POWER ON)

Cause: The existing Sensor Module software does not support the safe motion monitoring function with the higher-level control.
Note:
This fault results in a STOP A that cannot be acknowledged.
Fault value (r0949, decimal):
Only for internal Siemens troubleshooting.

Remedy: - use a Sensor Module that supports safe motion monitoring function.
- upgrade the Sensor Module software.
Note:
SI: Safety Integrated

F01680 SI motion: Checksum error, safety monitoring functions

Reaction: OFF2

Acknowledge: IMMEDIATELY (POWER ON)

Cause: The actual checksum calculated by the drive and entered in r9728 over the safety-relevant parameters does not match the target checksum saved in p9729 at the last machine acceptance.
Safety-relevant parameters have been changed or a fault is present.
Note:
This fault results in a STOP A that cannot be acknowledged.
Fault value (r0949, decimal):
0: Checksum error for SI parameters for motion monitoring.
1: Checksum error for SI parameters for actual values.

Remedy: - Check the safety-relevant parameters and if required, correct.
- carry-out a POWER ON.
- carry-out an acceptance test.
Note:
SI: Safety Integrated

C01681 SI motion: Incorrect parameter value

Reaction: NONE

Acknowledge: IMMEDIATELY (POWER ON)

Cause: The parameter value cannot be parameterized with this value.
Fault value (r0949, decimal):
Parameter number with the incorrect value

Remedy: Correct parameter value

F01682 SI motion: Monitoring function not supported

Reaction: OFF2

Acknowledge: IMMEDIATELY (POWER ON)

Cause: The monitoring function enabled in p9501 is not supported in this firmware version.
Note:
This fault results in a STOP A that cannot be acknowledged.
Fault value (r0949, decimal):
1: Monitoring function SE not supported (p9501.1).
2: Monitoring function SN not supported (p9501.7 and p9501.8 - 15 and p9503).
3: Monitoring function SG override not supported (p9501.5).
10: Monitoring functions only supported in the servo mode.

Remedy: De-select the monitoring function involved (p9501, p9503).
Note:
SE: Safe software limit switch
SG: Safely-reduced speed
SI: Safety Integrated
SN: Safe software cams
See also: p9501

© Siemens AG, 2005. All rights reserved

F01683 SI motion: SBH/SG enable missing

Reaction: OFF2

Acknowledge: IMMEDIATELY (POWER ON)

Cause: The safety-relevant basic function "SBH/SG" is not enabled in p9501 although other safety-relevant monitoring functions are enabled.
Note:
This fault results in a STOP A that cannot be acknowledged.

Remedy: Enable the function "SBH/SG" (p9501.0) and carry-out a POWER ON.
Note:
SBH: Safe operating stop
SG: Safely-reduced speed
SI: Safety Integrated
See also: p9501

F01684 SI motion: Safe software limit switch limit values interchanged

Reaction: OFF2

Acknowledge: IMMEDIATELY (POWER ON)

Cause: For the function "safe software limit switch" (SE), a lower value is in p9534 as in p9535.
Note:
This fault results in a STOP A that cannot be acknowledged.
Fault value (r0949, decimal):
1: Limit values SE1 interchanged.
2: Limit values SE2 interchanged.

Remedy: Correct the limit values in p9534 and p9535 and carry-out a POWER ON.
Note:
SE: Safe software limit switch
SI: Safety Integrated

F01685 SI motion: Safe velocity limit value too high

Reaction: OFF2

Acknowledge: IMMEDIATELY (POWER ON)

Cause: The limit value for the function "safely reduced speed" (SG) is greater than the speed that corresponds to an encoder limit frequency of 500 kHz.
Fault value (r0949, decimal):
Maximum permissible speed.

Remedy: Correct the limit values for SG and carry-out a POWER ON.
Note:
SG: Safely-reduced speed
SI: Safety Integrated
See also: p9531

F01686 SI motion: Illegal parameterization, cam position

Reaction: OFF2

Acknowledge: IMMEDIATELY (POWER ON)

Cause: At least one enabled "safety software cam" (SN) is parameterized in p9536 or p9537 too close at the tolerance range around the modulo position.
Fault value (r0949, decimal):
Number of the "safe software cam" with an illegal position.
See also: p9501

Remedy: Correct the cam position and carry-out a POWER ON.
Note:
SI: Safety Integrated
SN: Safe software cams
See also: p9536, p9537

© Siemens AG, 2005. All rights reserved

F01687 **SI motion: Illegal parameterization, modulo value SN**

Reaction: OFF2

Acknowledge: IMMEDIATELY (POWER ON)

Cause: The parameterized modulo value for the "safe software cams" (SN) function is not a multiple of 360 000 mDegrees.

Remedy: Correct the modulo value for SN and carry-out a POWER ON.
Note:
SI: Safety Integrated
SN: Safe software cams

F01688 **SI motion: Actual value synchronization not permissible**

Reaction: OFF2

Acknowledge: IMMEDIATELY (POWER ON)

Cause: It is not permissible to simultaneously enable the actual value synchronization and a monitoring function with absolute reference (SE/SN).

Remedy: Either carry-out the monitoring functions with absolute reference (SE/SN) or de-select the "actual value synchronization" function and carry-out a POWER ON.
Note:
SE: Safe software limit switch
SI: Safety Integrated
SN: Safe software cams
See also: p9501

C01689 **SI motion: Axis re-configured**

Reaction: OFF2

Acknowledge: POWER ON

Cause: The axis configuration was changed.
Parameter p0108.13 is internally set to the correct value.
Fault value (r0949, decimal):
Parameter number that initiated the change
See also: p9502

Remedy: Carry-out a POWER ON.

A01698 (F) **SI CU: Commissioning mode active**

Reaction: NONE

Acknowledge: NONE

Cause: The commissioning of the "Safety Integrated" function is selected.
This message is withdrawn after the safety functions have been commissioned.
Note:
This message does not result in a safety stop response.
See also: p0010

Remedy: None necessary.
Note:
CU: Control unit
SI: Safety Integrated

Reaction upon F: NONE (OFF1, OFF2, OFF3)

Acknowledge upon F: IMMEDIATELY (POWER ON)

A01699 (F) **SI CU: Shutdown path test required**

Reaction: NONE

Acknowledge: NONE

Cause: The time set in p9659 for the forced checking procedure of the safety shutdown paths has been exceeded. The safety shutdown paths must be re-tested.
After the next time that the "safe standstill" function (SH) is de-selected, the message is withdrawn and the monitoring time is reset.
Note:
This message does not result in a safety stop response.
See also: p9659

© Siemens AG, 2005. All rights reserved

Remedy: Select safe standstill and then deselect again.
Note:
CU: Control unit
SH: Safe standstill
SI: Safety Integrated

Reaction upon F: NONE (OFF1, OFF2, OFF3)

Acknowledge upon F: IMMEDIATELY (POWER ON)

C01700 SI motion: STOP A initiated

Reaction: OFF2

Acknowledge: IMMEDIATELY (POWER ON)

Cause: The drive is stopped via a STOP A (pulses are cancelled via the safety shutdown path of the Control Unit).
Possible causes:
- stop request from the higher-level control.
- pulses not cancelled after a parameterized time (p9557) after test stop selection.
- subsequent response to the message C01706 "SI Motion: Safe braking ramp exceeded".
- subsequent response to the message C01714 "SI Motion: Safe speed exceeded".
- subsequent response to the message C01701 "SI Motion: STOP B initiated".

Remedy:
- remove the fault cause in the control and carry-out a POWER ON.
- check the value in p9557, if necessary, increase the value, and carry-out POWER ON.
- check the shutdown path of Control Unit (check DRIVE-CLiQ communications).
- carry-out a diagnostics routine for message C01706.
- carry-out a diagnostics routine for message C01714.
- carry-out a diagnostics routine for message C01701.
- replace Motor Module.
- replace Control Unit.

Note:
SI: Safety Integrated

C01701 SI motion: STOP B initiated

Reaction: OFF3

Acknowledge: IMMEDIATELY (POWER ON)

Cause: The drive is stopped via a STOP B (braked along the current limit).
As a result of this fault, after the time, parameterized in p9556 has expired, or the speed threshold, parameterized in p9560 has been fallen below, message C01700 "STOP A initiated" is output.
Possible causes:
- stop request from the higher-level control.
- subsequent response to the message C01714 "SI Motion: Safely reduced speed exceeded".
- subsequent response to the message C01711 "SI Motion: Defect in a monitoring channel".

Remedy:
- remove the fault cause in the control and carry-out a POWER ON.
- carry-out a diagnostics routine for message C01714.
- carry-out a diagnostics routine for message C01711.

Note:
SI: Safety Integrated

C01706 SI motion: Safe braking ramp exceeded

Reaction: NONE

Acknowledge: IMMEDIATELY (POWER ON)

Cause: After initiating STOP B or STOP C, the velocity has exceeded the selected tolerance.
The drive is shut down by the message C01700 "SI Motion: STOP A initiated".

Remedy: Check the braking behavior, if required, adapt the tolerance for "safe braking ramp" (SBR).
Note:
SBR: Safe braking ramp
SI: Safety Integrated
See also: p9548

© Siemens AG, 2005. All rights reserved

C01707 SI motion: Tolerance for safe operating stop exceeded

Reaction: NONE

Acknowledge: IMMEDIATELY (POWER ON)

Cause: The actual position has distanced itself further from the target position than the standstill tolerance.
The drive is stopped by the message C01701 "SI Motion: STOP B initiated".

Remedy: - check whether safety faults are present and if required carry-out the appropriate diagnostic routines for the particular faults.
- check whether the standstill tolerance matches the accuracy and control dynamic performance of the axis.
- carry-out a POWER ON.
Note:
SBH: Safe operating stop
SI: Safety Integrated
See also: p9530

C01708 SI motion: STOP C initiated

Reaction: STOP2

Acknowledge: IMMEDIATELY (POWER ON)

Cause: The drive is stopped via a STOP C (braked along the current limit).
"Safe operating stop" (SBH) is activated after the parameterized timer stage has expired.
Possible causes:
- stop request from the higher-level control.
- subsequent response to the message C01714 "SI Motion: Safely reduced speed exceeded".
- subsequent response to the message C01715 "SI Motion: Safe endstop "exceeded".
See also: p9552

Remedy: - remove the fault cause in the control and carry-out a POWER ON.
- carry-out a diagnostics routine for message C01714.
Note:
SBH: Safe operating stop
SI: Safety Integrated

C01709 SI motion: STOP D initiated

Reaction: NONE

Acknowledge: IMMEDIATELY (POWER ON)

Cause: The drive is stopped via a STOP D (braking along the path).
"Safe operating stop" (SBH) is activated after the parameterized timer stage has expired.
Possible causes:
- stop request from the higher-level control.
- subsequent response to the message C01714 "SI Motion: Safely reduced speed exceeded".
- subsequent response to the message C01715 "SI Motion: Safe endstop "exceeded".
See also: p9553

Remedy: - remove the fault cause in the control and carry-out a POWER ON.
- carry-out a diagnostics routine for message C01714.
Note:
SBH: Safe operating stop
SI: Safety Integrated

C01710 SI motion: STOP E initiated

Reaction: NONE

Acknowledge: IMMEDIATELY (POWER ON)

Cause: The drive is stopped via a STOP E (retraction motion).
"Safe operating stop" (SBH) is activated after the parameterized timer stage has expired.
Possible causes:
- stop request from the higher-level control.
- subsequent response to the message C01714 "SI Motion: Safely reduced speed exceeded".
- subsequent response to the message C01715 "SI Motion: Safe endstop "exceeded".
See also: p9554

© Siemens AG, 2005. All rights reserved

Remedy: - remove the fault cause in the control and carry-out a POWER ON.
- carry-out a diagnostics routine for message C01714.
Note:
SBH: Safe operating stop
SI: Safety Integrated

C01711 SI motion: Defect in a monitoring channel

Reaction: NONE

Acknowledge: IMMEDIATELY (POWER ON)

Cause: When cross-checking and comparing the two monitoring channels, the drive detected a difference between the input data or results of the monitoring functions and initiated a STOP F. One of the monitoring function functions no longer reliably functions - i.e. safe operation is no longer possible.
If at least one monitoring function is active, then after the parameterized timer stage has expired, the message C01701 "SI Motion: STOP B initiated" is output.
The message value that resulted in a STOP F is displayed in r9725.
Message value (r9749, decimal):
Value, that resulted in a STOP F.
See also: p9555, r9725

Remedy: The message value contained in r9725 is described in message 27001 of the higher-level control.
Note:
SI: Safety Integrated

C01714 SI motion: Safely reduced speed exceeded

Reaction: NONE

Acknowledge: IMMEDIATELY (POWER ON)

Cause: The drive had moved faster than that specified by the velocity limit value (p9531). The drive is stopped as a result of the configured stop response (p9563).
Message value (r9749, decimal):
100: SG1 exceeded.
200: SG2 exceeded..
300: SG3 exceeded.
400: SG4 exceeded.
1000: Encoder limit frequency exceeded.

Remedy: - check the traversing/motion program in the control.
- check the limits for "safely reduced speed (SG) and if required, adapt (p9531).
Note:
SG: Safely-reduced speed
SI: Safety Integrated
See also: p9531, p9563

C01798 SI motion: Test stop running

Reaction: NONE

Acknowledge: IMMEDIATELY (POWER ON)

Cause: The test stop is active.

Remedy: None necessary.
The message is withdrawn when the test stop is ended.
Note:
SI: Safety Integrated

C01799 SI motion: Acceptance test mode active

Reaction: NONE

Acknowledge: IMMEDIATELY (POWER ON)

Cause: The acceptance test mode is active. The POWER ON signals of the safety-relevant motion monitoring functions can be acknowledged during the acceptance test using the RESET button of the higher-level control.

Remedy: None necessary.
The message is withdrawn when exiting the acceptance test mode.
Note:
SI: Safety Integrated

© Siemens AG, 2005. All rights reserved

F01800 DRIVE-CLiQ: Hardware/configuration incorrect

Reaction: NONE (DCBRAKE, ENCODER, OFF1, OFF2, OFF3, STOP1, STOP2)

Acknowledge: IMMEDIATELY (POWER ON)

Cause: A DRIVE-CLiQ connection fault has occurred.
Fault value (r0949, decimal):
0 ... 7:
Communications via DRIVE-CLiQ socket 0 ... 7 has not been switched to cyclic operation. The cause can be an incorrect structure or a configuration that results in an impossible bus timing.
10:
Loss of the DRIVE-CLiQ connection. The cause can be, for example, that the DRIVE-CLiQ cable was withdrawn from the Control Unit or as a result of a short-circuit for motors with DRIVE-CLiQ. This fault can only be acknowledged in cyclic communication.
11:
Repeated fault when detecting the connection. This fault can only be acknowledged in cyclic communication.
12:
A connection was detected but the node ID exchange mechanism does not function. The reason is probably that the component is defective. This fault can only be acknowledged in cyclic communication.

Remedy: Re fault value = 0 ... 7:
- ensure that the DRIVE-CLiQ components have the same firmware releases.
- avoid longer topologies for short current controller clock cycles.

Re fault value = 10:
- check the DRIVE-CLiQ cables at the Control Unit.
- remove any short-circuit for motors with DRIVE-CLiQ.
- carry-out a POWER ON.

Re fault value = 11:
- check the electrical cabinet design and cable routing for EMC compliance

Re fault value = 12:
- replace the component involved.

F01802 (A) CU DRIVE-CLiQ: POWER ON due to basic sampling times

Reaction: OFF2 (DCBRAKE, OFF1)

Acknowledge: POWER ON

Cause: It is not possible to change the DRIVE-CLiQ basic sampling times p0110 in operation. POWER ON is required.
Fault value (r0949, decimal):
Index of p0110.

Remedy: - save (p0971 = 1).
- carry-out a POWER ON.

Reaction upon A: NONE

Acknowledge upon A: NONE

A01900 (F) PROFIBUS: Configuration telegram error

Reaction: NONE

Acknowledge: NONE

Cause: A PROFIBUS master attempts to establish a connection using an incorrect configuring telegram.
Alarm value (r2124, decimal):
50: Syntax error.
51: Connection established to more drive objects than configured in the device. The drive objects for process data exchange and their sequence was defined using p0978.
52: Too many data words for input or output to a drive object. A max. of 16 words is permitted for SERVO and VECTOR; max. 5 words, for A_INFEED, TB30, TM31 and CU320.
53: Uneven number of bytes for input or output.

Remedy: Check the bus configuring on the master and slave sides.
Re alarm value = 51:
Check the list of the drive objects with process data exchange (p0978). With p0978[x] = 0, all of the following drive objects in the list are excluded from the process data exchange.

Reaction upon F: NONE (OFF1)

Acknowledge upon F: IMMEDIATELY

© Siemens AG, 2005. All rights reserved

A01901 (F) PROFIBUS: Parameterizing telegram error

Reaction: NONE

Acknowledge: NONE

Cause: A PROFIBUS master attempts to establish a connection using an incorrect parameterizing telegram.
Alarm value (r2124, decimal):
1: Incorrect parameterizing bits
10: Illegal length of an optional parameterizing block
11: Illegal ID of an optional parameterizing block
20: Double parameterizing block for clock synchronization
21: Incorrect parameterizing block for clock synchronization
22: Incorrect parameterizing bits for clock synchronization

Remedy: Check the bus configuration:
- bus addresses
- slave configuring

Reaction upon F: NONE (OFF1)

Acknowledge upon F: IMMEDIATELY

A01902 PROFIBUS: Parameterizing telegram not permissible

Reaction: NONE

Acknowledge: NONE

Cause: Alarm value (r2124, decimal):
0: Bus cycle time Tdp < 0.5 ms.
1: Bus cycle time Tdp > 32 ms.
2: Bus cycle time Tdp is not a integer multiple of the current controller clock cycle.
3: Instant of the actual value sensing Ti > Bus cycle time Tdp.
4: Instant of the actual value sensing Ti is not an integer multiple of the current controller clock cycle.
5: Instant of the setpoint transfer To >= Bus cycle time Tdp.
6: Instant of the setpoint transfer To is not an integer multiple of the current controller clock cycle.
7: Master application cycle time Tmapc is not an integer multiple of the speed controller clock cycle.
8: Bus reserve bus cycle time Tdp - data exchange time Tdx less than two current controller clock cycles.
9: Bus cycle time Tdp has been modified with respect to the first time that the connection was established.
10: Instant of the setpoint transfer not To <= data exchange time Tdx + To_min.
11: Master application cycle time Tmapc > 14.
12: PLL tolerance window Tpll_w > Tpll_w_max.
13: Bus cycle time Tdp is not a multiple of all basic clock cycles p0110[x].
14: For COMM BOARD with the setting To - 1 = Tdp - Ti, the instant of the setpoint transfer is not To <= Data Exchange time Tdx + 2 * To_min.
15: This configuration is not permitted for Tdp < 1 ms.
16: Instant of the actual value sensing Ti is less than the permitted value (COMM BOARD: Ti >= 2).
17: The setting (To + Ti = Tdp + 2) is not permitted for COMM BOARD.

Remedy: - adapt the parameterizing telegram.
- adapt the current and speed controller clock cycle.
Re alarm value = 9:
- carry-out a POWER ON.
Re alarm value = 15:
- check the number specific drive object types in the configuration.

© Siemens AG, 2005. All rights reserved

A01903 (F) COMM INT: Receive configuration data not valid

Reaction: NONE

Acknowledge: NONE

Cause: The drive unit did not accept the receive-configuration data.
Alarm value (r2124, decimal):
Return value of the receive-configuration data check.
0: Configuration accepted.
1: Connection established to more drive objects than configured in the device. The drive objects for process data exchange and their sequence was defined using p0978.
2: Too many data words for input or output to a drive object. A max. of 16 words is permitted for SERVO and VECTOR; max. 5 words, for A_INFEED, TB30, TM31 and CU320.
3: Uneven number of bytes for input or output.
4: Setting data for synchronization not accepted.
5: Drive still not in cyclic operation.
6: Buffer system not accepted.
7: Cyclic channel length too short for this setting.
8: Cyclic channel address not initialized.
9: 3-buffer system not permitted.
10: DRIVE-CLiQ fault.
11: CU link fault.
12: CX32 not in cyclic operation.

Remedy: Check the receive configuration data.
Re alarm value = 1:
Check the list of the drive objects with process data exchange (p0978). With p0978[x] = 0, all of the following drive objects in the list are excluded from the process data exchange.

Reaction upon F: NONE (OFF1, OFF2, OFF3)

Acknowledge upon F: IMMEDIATELY

F01910 (N, A) PROFIBUS: Setpoint timeout

Reaction: A_INFEED: OFF2 (DCBRAKE, NONE, OFF1, OFF3, STOP1, STOP2)
SERVO: OFF3 (DCBRAKE, NONE, OFF1, OFF2, STOP1, STOP2)
VECTOR: OFF3 (DCBRAKE, NONE, OFF1, OFF2, STOP1, STOP2)

Acknowledge: IMMEDIATELY

Cause: The receipt of setpoints from the PROFIBUS interface is interrupted because the bus connection is interrupted or the PROFIBUS master is switched off or was set into the STOP state.

Remedy: Restore the bus connection and set the PROFIBUS master to RUN.

Reaction upon N: NONE

Acknowledge upon N: NONE

Reaction upon A: NONE

Acknowledge upon A: NONE

F01911 PROFIBUS: Clock synchronous operation, clock cycle failure

Reaction: OFF1

Acknowledge: IMMEDIATELY

Cause: The global control telegram to synchronize the clock cycles has failed - in cyclic operation - for several DP clock cycles or has violated the time grid specified in the parameterizing telegram over several consecutive DP clock cycles (refer to the bus cycle time, Tdp and Tdpllw).

Remedy: - check the PROFIBUS cables and connectors.
- check whether communications were briefly or permanently interrupted.
- check the bus and master for utilization level (e.g. bus cycle time Tdp was set too short).

© Siemens AG, 2005. All rights reserved

F01912	PROFIBUS: Clock-synchronous operation, sign-of-life failure
Reaction:	OFF1
Acknowledge:	IMMEDIATELY
Cause:	The maximum permissible number of errors in the master sign-of-life (clock synchronous PROFIBUS) has been exceeded in cyclic operation.
Remedy:	- check the physical bus configuration (terminating resistor, shielding, etc.). - check the interconnection of the master sign-of-life (p2045). - check whether the master correctly sends the sign-of-life (e.g. set-up a trace with STW2.12 ... STW2.15 and trigger signal ZSW1.3). - check the permissible telegram failure rate (p0925). - check the bus and master for utilization level (e.g. bus cycle time Tdp was set too short).

F01913 (N, A)	COMM INT: Monitoring time, sign-of-life expired
Reaction:	OFF1 (NONE, OFF2, OFF3)
Acknowledge:	IMMEDIATELY
Cause:	The monitoring time for the sign-of-life counter has expired.
Remedy:	- acknowledge faults that are present. - carry-out a POWER ON (power off/on) for all components. - upgrade the firmware release. - contact the Hotline.
Reaction upon N:	NONE
Acknowledge upon N:	NONE
Reaction upon A:	NONE
Acknowledge upon A:	NONE

F01914 (N, A)	COMM INT: Monitoring time, configuration expired
Reaction:	OFF1 (NONE, OFF2, OFF3)
Acknowledge:	IMMEDIATELY
Cause:	The monitoring time for the configuration has expired. Fault value (r0949, decimal): 0: The transfer of the send-configuration data has been exceeded (time). 1: The transfer of the receive-configuration data has been exceeded (time).
Remedy:	- acknowledge faults that are present. - carry-out a POWER ON (power off/on) for all components. - upgrade the firmware release. - contact the Hotline.
Reaction upon N:	NONE
Acknowledge upon N:	NONE
Reaction upon A:	NONE
Acknowledge upon A:	NONE

A01920 (F)	PROFIBUS: Interruption, cyclic connection
Reaction:	NONE
Acknowledge:	NONE
Cause:	The cyclic connection to the PROFIBUS master is interrupted.
Remedy:	Set up the PROFIBUS connection and activate the PROFIBUS master in the cyclic mode.
Reaction upon F:	NONE (OFF1)
Acknowledge upon F:	IMMEDIATELY

© Siemens AG, 2005. All rights reserved

A01921 (F) PROFIBUS: Clock cyc synchron

Reaction: NONE

Acknowledge: NONE

Cause: Output data of PROFIBUS master (setpoints) received at the incorrect instant in time within the PROFIBUS clock cycle.

Remedy: Check the bus configuration:
- parameters for clock synchronization: Ensure the instant in time for setpoint acceptance To > data exchange time Tdx

Reaction upon F: NONE (OFF1)

Acknowledge upon F: IMMEDIATELY

A01930 PROFIBUS: Current controller clock cycle for clock synchronous operation, not the same

Reaction: NONE

Acknowledge: NONE

Cause: The current controller clock cycle of all drives must be set the same for the clock synchronous PROFIBUS.
Alarm value (r2124, decimal):
Number of the drive object with the different current controller clock cycle.

Remedy: - set current controller clock cycles to identical values (p0115[0]).
See also: p0115

A01931 PROFIBUS: Speed controller clock cycle for clock synchronous operation, not the same

Reaction: NONE

Acknowledge: NONE

Cause: The speed controller clock cycle of all drives must be set the same for the clock synchronous PROFIBUS.
Alarm value (r2124, decimal):
Number of the drive object with the different speed controller clock cycle.

Remedy: - set the speed controller clock cycles the same (p0115[1]).
See also: p0115

A01940 PROFIBUS: Clock cycle synchronism not reached

Reaction: NONE

Acknowledge: NONE

Cause: PROFIBUS is in the data exchange state and clock synchronous operation has been selected using the parameterizing telegram. It was not possible to synchronize to the clock cycle specified by the master.
- the master doesn't send a clock synchronous global control telegram although the clock synchronous operation was selected when configuring the bus.
- the master is using another clock synchronous DP clock cycle than was transferred to the slave in the parameterizing telegram.
- at least one drive object (that is not controlled from PROFIBUS) has a pulse enable.

Remedy: - check the master application and bus configuration.
- check the consistency between the clock cycle input when configuring the slave and clock cycle setting at the master.
- ensure that the pulses of drive objects, not controlled from PROFIBUS, are not enabled. Only enable the pulses after synchronizing the PROFIBUS drives.

A01941 PROFIBUS: Clock cycle signal missing when the bus is being established

Reaction: NONE

Acknowledge: NONE

Cause: PROFIBUS is in the data exchange state and clock synchronous operation has been selected using the parameterizing telegram. The global control telegram for synchronization is not being received.

Remedy: Check the master application and bus configuration.

© Siemens AG, 2005. All rights reserved

A01943 PROFIBUS: Clock cycle signal error when the bus is being established

Reaction: NONE

Acknowledge: NONE

Cause: PROFIBUS is in the data exchange state and clock synchronous operation has been selected using the parameterizing telegram. The global control telegram for synchronization is being irregularly received.
-.the master is sending an irregular global control telegram.
- the master is using another clock synchronous DP clock cycle than was transferred to the slave in the parameterizing telegram.

Remedy: - check the master application and bus configuration.
- check the consistency between the clock cycle input when configuring the slave and clock cycle setting at the master.

A01944 PROFIBUS: Sign-of-life synchronism not reached

Reaction: NONE

Acknowledge: NONE

Cause: PROFIBUS is in the data exchange state and clock synchronous operation has been selected using the parameterizing telegram. Synchronization with the master sign-of-life (STW2 bits 12-15) could not be completed because the sign-of-life is changing differently than configured in the Tmapc time grid.

Remedy: - ensure that the master correctly increments the sign-of-life in the master application clock cycle.
- check the interconnection of the master sign-of-life (p2045).

F01950 (N, A) PROFIBUS: Clock synchronous operation, synchronization unsuccessful

Reaction: OFF1 (NONE)

Acknowledge: IMMEDIATELY (POWER ON)

Cause: Synchronization of the internal clock cycle to the global control telegram has failed. The internal clock cycle exhibits an unexpected shift.

Remedy: Siemens-internal

Reaction upon N: NONE

Acknowledge upon N: NONE

Reaction upon A: NONE

Acknowledge upon A: NONE

F01951 CU DRIVE-CLiQ: Synchronization, application clock cycle missing

Reaction: OFF2 (NONE)

Acknowledge: IMMEDIATELY (POWER ON)

Cause: If DRIVE-CLiQ components with different application clock cycle are operated at a DRIVE-CLiQ port, then this requires synchronization with the Control Unit.
This synchronization routine was not successful.
Fault value (r0949, decimal):
Only for internal Siemens troubleshooting.

Remedy: - carry-out a POWER ON (power off/on) for all components.
- upgrade the Motor Module software.
- upgrade the Control Unit software.

F01952 CU DRIVE-CLiQ: Synchronization of components not supported

Reaction: OFF2 (NONE)

Acknowledge: IMMEDIATELY (POWER ON)

Cause: The existing system configuration requires at the connected DRIVE-CLiQ components support the synchronization between the basic clock cycle, DRIVE-CLiQ clock cycle and the application clock cycle.
However, not all DRIVE-CLiQ components have this functionality.
Fault value (r0949, decimal):
Component number of the first faulted DRIVE-CLiQ component.

Remedy: Upgrade the firmware of the component specified in the fault value.
Note:
If required, also upgrade additional components in the DRIVE-CLiQ line.

© Siemens AG, 2005. All rights reserved

A01953 CU DRIVE-CLiQ: Synchronization not completed

Reaction: NONE

Acknowledge: NONE

Cause: After the drive system is powered-up, the synchronization between the basic clock cycle, DRIVE-CLiQ clock cycle and application clock cycle was started but was not completed within the selected time (tolerance).
Alarm value (r2124, decimal):
Only for internal Siemens troubleshooting.

Remedy: Carry-out a POWER ON (power off/on) for all components.

F01954 CU DRIVE-CLiQ: Synchronization not successful

Reaction: OFF2

Acknowledge: IMMEDIATELY (POWER ON)

Cause: After the drive system is powered-up, the synchronization between the basic clock cycle, DRIVE-CLiQ clock cycle and application clock cycle was started and was not able to be successfully completed.
Fault value (r0949, decimal):
Only for internal Siemens troubleshooting.

Remedy: 1. Ensure perfect functioning of the DRIVE-CLiQ.
2. Initiate a new synchronization, e.g. by:
- remove the PROFIBUS master and re-insert again.
- restart the PROFIBUS master.
- power-down the Control Unit and power-up again.
- press the Control Unit reset button.
- reset the parameter and download the saved parameters (p0009 = 30, p0976 = 2).

A01955 CU DRIVE-CLiQ: Synchronization DO not completed

Reaction: NONE

Acknowledge: NONE

Cause: After the drive system is powered-up, the synchronization between the basic clock cycle, DRIVE-CLiQ clock cycle and application clock cycle was started but was not completed within the selected time (tolerance).
Alarm value (r2124, decimal):
Only for internal Siemens troubleshooting.

Remedy: Carry-out a POWER ON (power off/on) for all components of the DO.

A02000 Function generator: Start not possible

Reaction: NONE

Acknowledge: NONE

Cause: The function generator has already been started.

Remedy: Stop the function generator and restart again if necessary.
See also: p4800

A02005 Function generator: Drive does not exist

Reaction: NONE

Acknowledge: NONE

Cause: The drive object specified for connection does not exist.
See also: p4815

Remedy: Use the existing drive object with the corresponding number.
See also: p4815

A02006 Function generator: No drive specified for connection

Reaction: NONE

Acknowledge: NONE

Cause: No drive specified for connection in p4815.
See also: p4815

Remedy: At least one drive to be connected must be specified in p4815.
See also: p4815

© Siemens AG, 2005. All rights reserved

A02007 Function generator: Drive not SERVO

Reaction: NONE

Acknowledge: NONE

Cause: The drive object specified for connection is not a SERVO.
See also: p4815

Remedy: Use a SERVO drive object with the corresponding number.

A02008 Function generator: Drive specified a multiple number of times

Reaction: NONE

Acknowledge: NONE

Cause: The drive object specified for connection is already specified.
Alarm value (r2124, decimal):
Drive object number of the drive object that is specified a multiple number of times.

Remedy: Specify a different drive object.

A02010 Function generator: Speed setpoint from the drive is not zero

Reaction: NONE

Acknowledge: NONE

Cause: The speed setpoint of a drive - selected to be connected to - is greater than the value for the standstill detection set using p1226.
Alarm value (r2124, decimal):
Number of the drive object involved.

Remedy: For all of the drives specified for connection, set the speed setpoints to 0.

A02011 Function generator: The actual drive speed is not zero

Reaction: NONE

Acknowledge: NONE

Cause: The speed actual value of a drive - selected to be connected to - is greater than the value for the standstill detection set using p1226.
Alarm value (r2124, decimal):
Number of the drive object involved.

Remedy: Set the relevant drives to zero speed before starting the function generator.

A02015 Function generator: Drive enable signals missing

Reaction: NONE

Acknowledge: NONE

Cause: The master control and/or enable signals are missing to connect to the specified drive.
Alarm value (r2124, decimal):
Number of the drive object involved.
See also: p4815

Remedy: Fetch the master control to the specified drive object and set all enable signals.

A02020 Function generator: Parameter cannot be changed

Reaction: NONE

Acknowledge: NONE

Cause: This parameter setting cannot be changed when the function generator is active (p4800 = 1).
See also: p4810, p4812, p4813, p4815, p4820, p4821, p4822, p4823, p4824, p4825, p4826, p4827, p4828, p4829

Remedy: - stop before parameterizing the function generator (p4800 = 0).
- if required, start the function generator (p4800 = 1).
See also: p4800

© Siemens AG, 2005. All rights reserved

A02025 Function generator: Period too short

Reaction: NONE

Acknowledge: NONE

Cause: The value for the period is too short.
See also: p4821

Remedy: Check and adapt the value for the period.
See also: p4821

A02026 Function generator: Pulse width too wide

Reaction: NONE

Acknowledge: NONE

Cause: The selected pulse width is too high.
The pulse width must be less than the period duration.
See also: p4822

Remedy: Reduce pulse width.
See also: p4821, p4822

A02030 Function generator: Physical address equals zero

Reaction: NONE

Acknowledge: NONE

Cause: The specified physical address is zero.
See also: p4812

Remedy: Set a physical address with a value other than zero.
See also: p4812

A02040 Function generator: Impermissible value for offset

Reaction: NONE

Acknowledge: NONE

Cause: The value for the offset is higher than the value for the upper limit or lower than the value for the lower limit.
See also: p4826

Remedy: Adjust the offset value accordingly.
See also: p4826, p4828, p4829

A02041 Function generator: Impermissible value for bandwidth

Reaction: NONE

Acknowledge: NONE

Cause: The bandwidth, referred to the time slice clock cycle of the function generator has either been set too low or too high.
Depending on the time slice clock cycle, the bandwidth is defined as follows:
Bandwidth_max = 1 / (2 * time slice clock cycle)
Bandwidth_min = Bandwidth_max / 100000
Example:
Assumption: p4830 = 125 μs
--> Bandwidth_max = 1 / (2 * 125 μs) = 4000 Hz
--> Bandwidth_min = 4000 Hz / 100000 = 0.04 Hz
Note:
p4823: Function generator bandwidth
p4830: Function generator time slice cycle
See also: p4823, p4830

Remedy: Check the value for the bandwidth and appropriately adapt.

A02047 Function generator: Invalid time slice clock cycle

Reaction: NONE

Acknowledge: NONE

Cause: The time slice cycle selected does not match any of the existing time slices.
See also: p4830

Remedy: Input an existing time slice cycle. The existing time slices can be read out via p7901.
See also: r7901

© Siemens AG, 2005. All rights reserved

A02050 Trace: Start not possible

Reaction: NONE

Acknowledge: NONE

Cause: The trace has already been started.
See also: p4700

Remedy: Stop the trace and, if necessary, start again.

A02055 Trace: Recording time too short

Reaction: NONE

Acknowledge: NONE

Cause: The trace duration is too short.
The minimum is twice the value of the trace clock cycle.
See also: p4721

Remedy: Check the selected recording time and, if necessary, adjust.

A02056 Trace: Recording cycle too low

Reaction: NONE

Acknowledge: NONE

Cause: The selected recording cycle is shorter than the selected basis clock cycle 0 (p0110[0]).
See also: p4720

Remedy: Increase the value for the trace cycle.

A02057 Trace: Invalid time slice clock cycle

Reaction: NONE

Acknowledge: NONE

Cause: The time slice cycle selected does not match any of the existing time slices.
See also: p4723

Remedy: Input an existing time slice cycle. The existing time slices can be read out via p7901.
See also: r7901

A02060 Trace: Signal to be recorded is missing

Reaction: NONE

Acknowledge: NONE

Cause: - a signal to be traced was not specified.
- the specified signals are not valid.
See also: p4730, p4731, p4732, p4733

Remedy: - specify the signal to be traced.
- check whether the relevant signal can be traced.

A02061 Trace: Invalid signal

Reaction: NONE

Acknowledge: NONE

Cause: - the specified signal does not exist.
- the specified signal can no longer be traced (recorded).
See also: p4730, p4731, p4732, p4733

Remedy: - specify the signal to be traced.
- check whether the relevant signal can be traced.

© Siemens AG, 2005. All rights reserved

A02062 Trace: Trigger signal invalid

Reaction: NONE

Acknowledge: NONE

Cause: - a trigger signal was not specified.
- the specified signal does not exist.
- the specified signal is not a fixed-point signal.
- the specified signal cannot be used as trigger signal for the trace.
See also: p4711

Remedy: Specify a valid trigger signal.

A02063 Trace: Invalid data type

Reaction: NONE

Acknowledge: NONE

Cause: The specified data type to select a signal using a physical address is invalid.
See also: p4711, p4730, p4731, p4732, p4733

Remedy: Use a valid data type.

A02070 Trace: Parameter cannot be changed

Reaction: NONE

Acknowledge: NONE

Cause: The trace parameter settings cannot be changed when the trace is active.
See also: p4700, p4710, p4711, p4712, p4713, p4714, p4715, p4716, p4720, p4721, p4722, p4730, p4731, p4732, p4733, p4780, p4781, p4782, p4783, p4789, p4795

Remedy: - stop the trace before parameterization.
- if required, start the trace.

A02075 Trace: Pretrigger time too long

Reaction: NONE

Acknowledge: NONE

Cause: The selected pretrigger time must be shorter than the recording time.
See also: p4721, p4722

Remedy: Check the pretrigger time setting and change if necessary.

A02099 Trace: Insufficient memory

Reaction: NONE

Acknowledge: NONE

Cause: The memory space still available on the Control Unit is no longer sufficient for the trace function.

Remedy: Reduce the memory required, e.g. as follows:
- reduce the trace (record) time.
- increase the trace clock cycle.
- reduce the number of signals to be traced (recorded).
See also: r4708, r4799

A02100 CU: Computation deadtime current controller too low

Reaction: NONE

Acknowledge: NONE

Cause: The value in p0118 produces a dead time of one clock cycle because it lies before the setpoint becomes available. A possible cause could be, for example, that the system characteristics no longer match those parameterized after a component has been replaced.
Alarm value (r2134, floating point):
The minimum value for p0118 where a deadtime no longer occurs.

Remedy: - set p0118 to a value greater than or equal to the alarm value.
- set p0117 to an automatic setting.
- check the firmware releases of the components involved.
See also: p0117, p0118

© Siemens AG, 2005. All rights reserved

F03500 (A)	TM: Initialization
Reaction:	OFF1 (OFF2)
Acknowledge:	IMMEDIATELY (POWER ON)
Cause:	When initializing the Terminal Modules, the terminals of the Control Unit or the Terminal Board 30, an internal software error has occurred. Fault value (r0949, decimal): The thousands location = 1 ... 3: The component number (p0151) of the module involved is specified at the ones, tens and hundreds position.
Remedy:	- power-down the power supply for the Control Unit and power-up again. - check the DRIVE-CLiQ connection. - if required, replace the Terminal Module. The Terminal Module should be directly connected to a DRIVE-CLiQ socket of the Control Unit. If the fault occurs again, replace the Terminal Module.
Reaction upon A:	NONE
Acknowledge upon A:	NONE

A03501	TM: Sampling time change
Reaction:	NONE
Acknowledge:	NONE
Cause:	The sampling times of the inputs/outputs were changed. This change only becomes valid after the next run-up
Remedy:	Carry-out a Power On

F03505 (N, A)	TM: Analog input, wire breakage
Reaction:	OFF1 (OFF2)
Acknowledge:	IMMEDIATELY (POWER ON)
Cause:	The input current of the TM analog input has exceeded the threshold value parameterized in p4061[x]. This fault can only occur, if p4056[x] = 3 (4 ... 20 mA with monitoring) is set. Index x = 0: Analog input 0 (X522.1 to .3) Index x = 1: Analog input 1 (X522.4 to .5) Fault value (r0949, decimal): The component number (p0151) of the module involved is specified at the ones, tens and hundreds position. The thousands position specifies the analog input involved: 0: Analog input 0 (AI 0), 1: Analog input 1 (AI 1)
Remedy:	Check the connection to the signal source for interruptions. Check the magnitude of the impressed current - it is possible that the impressed signal is too low. Please note that the input has a load resistor of 250 Ohm. The input current measured by the TM can be read-out of r4052[x].
Reaction upon N:	NONE
Acknowledge upon N:	NONE
Reaction upon A:	NONE
Acknowledge upon A:	NONE

A03550	TM: Speed setpoint filter natural frequency > Shannon frequency
Reaction:	NONE
Acknowledge:	NONE
Cause:	The natural filter frequency of the speed setpoint filter (p1417) is greater than the Shannon frequency. The Shannon frequency is calculated according to the following formula: 0.5 / p0115[0] See also: p1417
Remedy:	Reduce the natural frequency of the speed setpoint filter (PT2 low pass) (p1417).

© Siemens AG, 2005. All rights reserved

F03590 (N, A) TM: Module not ready

Reaction: A_INFEED: OFF2 (NONE)
SERVO: NONE (DCBRAKE, ENCODER, OFF1, OFF2, OFF3, STOP1, STOP2)
VECTOR: OFF2 (DCBRAKE, ENCODER, NONE, OFF1, OFF3, STOP1, STOP2)

Acknowledge: IMMEDIATELY (POWER ON)

Cause: The Terminal Module involved does not send a ready signal and no valid cyclic data.
Fault value (r0949, decimal):
Drive object number.

Remedy: - check the 24 V power supply.
- check the DRIVE-CLiQ connection.

Reaction upon N: NONE

Acknowledge upon N: NONE

Reaction upon A: NONE

Acknowledge upon A: NONE

A05000 (N) Power module: Overtemperature heatsink

Reaction: NONE

Acknowledge: NONE

Cause: The alarm threshold for overtemperature at the inverter heatsink has been reached. The response is set using p0290.
If the temperature of the heatsink increases by an additional 5 K, then fault F30004 is initiated.

Remedy: Check the following:
- is the ambient temperature within the defined limit values?
- have the load conditions and the load duty cycle been appropriately dimensioned?
- has the cooling failed?

Reaction upon N: NONE

Acknowledge upon N: NONE

A05001 (N) Power module: Overtemperature chip

Reaction: NONE

Acknowledge: NONE

Cause: Alarm threshold for overtemperature of the power semiconductor in the AC converter has been reached. The response is set using p0290.
If the chip temperature increases by an additional 15 K, then fault F30025 is initiated.

Remedy: Check the following:
- is the ambient temperature within the defined limit values?
- have the load conditions and the load duty cycle been appropriately dimensioned?
- has the cooling failed?
- pulse frequency too high?
See also: r0037, p0290

Reaction upon N: NONE

Acknowledge upon N: NONE

A05002 (N) Power module: Overtemp. air intake

Reaction: NONE

Acknowledge: NONE

Cause: The alarm threshold for the air intake overtemperature has been reached. The response is set using p0290.
If the air intake temperature increases by an additional 5 K, then fault F30035 is output.

© Siemens AG, 2005. All rights reserved

Remedy: Check the following:
- is the ambient temperature within the defined limit values?
- has the fan failed? Check the direction of rotation.

Reaction upon N: NONE

Acknowledge upon N: NONE

A05003 (N) Power module: Overtemperature electronics unit

Reaction: NONE

Acknowledge: NONE

Cause: The alarm threshold for the overtemperature of the electronics module has been reached. The response is set using p0290.
If the temperature of the electronics module increases by an additional 5 K, then fault F30036 is initiated.

Remedy: Check the following:
- is the ambient temperature within the defined limit values?
- has the fan failed? Check the direction of rotation.

Reaction upon N: NONE

Acknowledge upon N: NONE

A05004 (N) Power module: Overtemperature rectifier

Reaction: NONE

Acknowledge: NONE

Cause: The alarm threshold for the overtemperature of the rectifier has been reached. The response is set using p0290.
If the temperature of the rectifier increases by an additional 5 K, then fault F30037 is initiated.

Remedy: Check the following:
- is the ambient temperature within the defined limit values?
- have the load conditions and the load duty cycle been appropriately dimensioned?
- has the fan failed? Check the direction of rotation.
- has a phase of the line supply failed?
- is an arm of the supply (incoming) rectifier defective?

Reaction upon N: NONE

Acknowledge upon N: NONE

A05005 Cooling system: Cooling medium flow rate too low

Reaction: NONE

Acknowledge: NONE

Cause: Cooling system: Alarm - flow rate has fallen below the alarm value

Remedy:

F05050 Parallel circuit configuration: Pulse enable in spite of pulse inhibit

Reaction: OFF2 (NONE, OFF1, OFF3, STOP1, STOP2)

Acknowledge: IMMEDIATELY

Cause: A power module signals that the pulses are enabled although the pulses are inhibited.
Fault value (r0949, decimal):
Number of the power module involved.

Remedy: The power module is defective and must be replaced.

F05051 Parallel circuit configuration: Power module pulse enable missing

Reaction: OFF2 (NONE, OFF1, OFF3, STOP1, STOP2)

Acknowledge: IMMEDIATELY

Cause: For one or several power modules, the pulses were not able to be enabled.
Fault value (r0949, decimal):
Number of the power module involved.

Remedy:
- acknowledge power module faults that are still present.
- inhibit the pulses of the power module involved (p7001).

© Siemens AG, 2005. All rights reserved

A05052 (F) Parallel circuit configuration: Impermissible current dissymmetry

Reaction: NONE

Acknowledge: NONE

Cause: The deviation of the individual currents of the power modules exceeds the alarm threshold specified in p7010.
Alarm value (r2124, decimal):
1: Phase U.
2: Phase V.
3. Phase W.

Remedy:
- inhibit the pulses of the faulted power module (p7001).
- check the connecting cables. Loose contacts can cause current spikes.
- the motor reactors are non-symmetrical or faulty and must be replaced.
- the CTs must be calibrated or replaced.

Reaction upon F: NONE (OFF1, OFF2, OFF3, STOP1, STOP2)

Acknowledge upon F: IMMEDIATELY

A05053 (F) Parallel circuit configuration: Inadmissible DC link voltage dissymmetry

Reaction: NONE

Acknowledge: NONE

Cause: The deviation of the DC link voltage measured values exceeds the alarm threshold specified in p7011.

Remedy:
- inhibit the pulses of the faulted power module (p7001).
- check the DC link connecting cables.
- the DC link voltage measurement is incorrect and must be calibrated or renewed.

Reaction upon F: NONE (OFF1, OFF2, OFF3, STOP1, STOP2)

Acknowledge upon F: IMMEDIATELY

F05055 Parallel circuit configuration: Power modules with different code numbers

Reaction: NONE

Acknowledge: IMMEDIATELY

Cause: The code numbers of the power modules do not match.
Fault value (r0949, decimal):
Parameter in which the first different power module code number was detected.

Remedy: For parallel circuit configurations, only power modules with identical power module data may be used.

F05056 Parallel circuit configuration: Power module EPROM versions differ

Reaction: NONE

Acknowledge: IMMEDIATELY

Cause: The EEPROM versions of the power modules do not match.
Fault value (r0949, decimal):
Parameter in which the first different version number was detected.

Remedy: For parallel circuit configurations, only power modules with identical EEPROM versions may be used.

F05057 Parallel circuit configuration: Power module firmware versions differ

Reaction: NONE

Acknowledge: IMMEDIATELY

Cause: The firmware versions of the power modules connected in parallel do not match.
Fault value (r0949, decimal):
Parameter in which the first different version number was detected.

Remedy: For parallel circuit configurations, only power modules with identical firmware versions may be used.

© Siemens AG, 2005. All rights reserved

F05058 Parallel circuit configuration: VSM EEPROM versions differ

Reaction: NONE

Acknowledge: IMMEDIATELY

Cause: The EEPROM versions of the Voltage Sensing Modules (VSM) do not match.
Fault value (r0949, decimal):
Parameter in which the first different version number was detected.

Remedy: For parallel circuit configurations, only Voltage Sensing Modules (VSM) with identical EEPROM versions may be used.

F05059 Parallel circuit configuration: VSM firmware versions differ

Reaction: NONE

Acknowledge: IMMEDIATELY

Cause: The firmware versions of the Voltage Sensing Modules (VSM) do not match.
Fault value (r0949, decimal):
Parameter in which the first different version number was detected.

Remedy: For parallel circuit configurations, only Voltage Sensing Modules (VSM) with identical firmware versions may be used.

F05060 Parallel circuit configuration: Power module firmware version does not match

Reaction: NONE

Acknowledge: IMMEDIATELY

Cause: Firmware from version V02.30.01.00 is required when connecting the power modules in parallel.

Remedy: Update the firmware of the power modules (at least V02.30.01.00).

F05061 Parallel infeed circuit, number of VSM

Reaction: NONE

Acknowledge: IMMEDIATELY

Cause: For closed-loop controlled chassis line supply infeeds: The number of connected and active Voltage Sensing Modules (VSM) does not match the number of power modules (connected in parallel).
Fault value (r0949, decimal):
Number of VSMs that are currently assigned to the drive object.

Remedy: Adapt the number of VSMs.

F06000 Infeed: Precharging monitoring time expired

Reaction: OFF2 (OFF1)

Acknowledge: IMMEDIATELY

Cause: After the line contactor closes the power module does not signal the READY state within the monitoring time (p0857).
The end of the DC link pre-charging was not detected due to one of the following reasons:
- there is not line supply voltage.
- the line contactor is not closed.
- the line supply voltage is too low.
- the power module has detected an internal fault.
- there is a DC link short-circuit.
- the DC link has a ground fault.
- the pre-charging resistors are overheated as there were too many pre-charging operations per time unit.
- the pre-charging resistors are overheated as the DC link capacitance is too high (max. 20 mF).
- line supply voltage incorrectly set.

See also: p0857

Remedy:
- check the line supply voltage
- check or energize the line contactor.
- check and if required increase the monitoring time p0857.
- if relevant, carefully note additional power module fault messages.
- check the DC link regarding short-circuit or ground fault.
- wait until the pre-charging resistors have cooled down.
- reduce the DC link capacitance by removing the power modules or supplementary modules.
- check the line supply voltage setting (p0210).

© Siemens AG, 2005. All rights reserved

F06010 Infeed: Power module EP 24 V missing in operation

Reaction: OFF2 (OFF1)
Acknowledge: IMMEDIATELY (POWER ON)
Cause: In operation, withdraw the pulse enable at terminal EP at the Line Module (X21.3, X21.4).
Remedy: - do not open the line breaker in operation - only when the pulses are inhibited.
- check the wiring of the DP input (X21.3, X21.4) at the Line Module to exclude any poor contacts.

F06050 Infeed: Smart mode is not supported

Reaction: OFF2
Acknowledge: IMMEDIATELY (POWER ON)
Cause: The power module does not support the smart mode.
Remedy: - set the sampling time p0115[0] >= 250 μs by setting the sampling time default (p0112) to the default value.
- de-activate the smart mode with p3400 and supply voltage p0210 <= 415 V.
- upgrade the power module software and/or hardware for the smart mode (r0192).
See also: r0192

F06100 Infeed: Shutdown due to line undervoltage condition

Reaction: OFF2 (OFF1)
Acknowledge: IMMEDIATELY (POWER ON)
Cause: The filtered (steady-state) value of the line supply voltage is less than the fault threshold (p0283).
Alarm condition: Vrms < p0283 * p0210.
Fault value (r0949, floating point):
Actual steady-state line supply voltage.
See also: p0283
Remedy: - check the line supply.
- check the line supply voltage (p0210).
- check the fault threshold (p0283).

A06105 (F) Infeed: Line undervoltage

Reaction: NONE
Acknowledge: NONE
Cause: The filtered (steady-state) value of line supply voltage is lower than the alarm threshold (p0282).
Alarm condition: Vrms < p0282 * p0210.
Alarm value (r2124, floating point):
Actual steady-state line supply voltage.
See also: p0282
Remedy: - check the line supply.
- check the line supply voltage (p0210).
- check the alarm threshold (p0282).
Reaction upon F: NONE (OFF1, OFF2)
Acknowledge upon F: IMMEDIATELY (POWER ON)

F06200 Infeed: Failure of one or several line phases

Reaction: OFF2 (OFF1)
Acknowledge: IMMEDIATELY (POWER ON)
Cause: Failure of one or several line phases.
The fault can be output in two operating states:
1. During the power-on phase of the infeed unit.
The measured line supply angle deviates from the regular characteristic for a 3-phase system - the PLL cannot be synchronized.
2. While the infeed is operational.
After a voltage dip has been detected (A06205) in one or several line phases a fault occurred within 100 ms (also refer to other relevant messages).
Probable causes of the fault:
- voltage dip on the line side or phase phase failure lasting longer than 10 ms.
- overload condition on the load side with peak current.
- commutating reactor missing.

© Siemens AG, 2005. All rights reserved

Remedy: - check the line supply and fuses.
- check the connection and size (rating) of the line commutating reactor.
- check the load.
See also: p3463

A06205 (F) Infeed: Voltage dip in at least one line supply phase

Reaction: NONE

Acknowledge: NONE

Cause: Voltage dip or overvoltage in one or several line supply phases has been detected in operation.
The pulses are then cancelled for 10 ms. The ready signal of the infeed unit in r0863.0 remains and the pulse inhibit due to the phase failure is displayed in r3405.2.
Alarm value (r2124, decimal):
Internal fault type of the line angle characteristic.

Remedy: - check the line supply and fuses.
- check the line supply quality and system fault level.
- check the load.
See also: r3405, p3463

Reaction upon F: NONE (OFF1, OFF2)

Acknowledge upon F: IMMEDIATELY (POWER ON)

F06210 Infeed: Summed current too high

Reaction: OFF2 (OFF1)

Acknowledge: IMMEDIATELY (POWER ON)

Cause: Smoothed sum of the phase currents (i1 + i2 + i3) greater than 4 % of the maximum power module current (r0209).
Possible causes:
- the DC link has a ground fault that results in a high summed current (r0069.6). The DC component in the line currents can damage/destroy the power module, commutating reactor or line filter!
- the zero point calibration of the current measurement was not carried-out (p3491, A06602).
- defective current measurement in the power module.
Fault value (r0949, floating point):
Smoothed sum of the phase currents.

Remedy: - check the DC link for a low-ohmic or high-ohmic ground fault and if one is present, remove.
- increase the monitoring time of the current-offset measurement (p3491).
- if required, replace the power module.

A06215 (F) Infeed: Summed current high

Reaction: NONE

Acknowledge: NONE

Cause: Smoothed sum of the phase currents (i1 + i2 + i3) greater than 3 % of the maximum power module current (r0209).
Possible causes:
- the DC link has a ground fault that results in a high summed current (r0069.6). The DC component in the line currents can damage/destroy the power module, commutating reactor or line filter!
- the zero point calibration of the current measurement was not carried-out (p3491, A06602).
- defective current measurement in the power module.
Alarm value (r2124, floating point):
Smoothed sum of the phase currents.

Remedy: - check the DC link for a low-ohmic or high-ohmic ground fault and if one is present, remove.
- increase the monitoring time of the current-offset measurement (p3491).
- if required, replace the power module.

Reaction upon F: NONE (OFF1, OFF2)

Acknowledge upon F: IMMEDIATELY (POWER ON)

© Siemens AG, 2005. All rights reserved

A06250 (F) Infeed: Defective capacitor(s) in at least one phase of line filter

Reaction: NONE

Acknowledge: NONE

Cause: A change in the line filter capacitance was detected in at least line phase.
The voltages and phase currents of the line filter, measured using a Voltage Sensing Module (VSM), indicated a deviation of the filter capacitances from the value parameterized in p0221.
A change or a defect of the line filter capacitors results in a shift of the resonant frequencies and can result in severe damage to the drive system.
Alarm value (r2124, floating point):
The calculated actual capacitance in μF (rounded-off to an integer number).
The 1st decimal point specifies the number of the phase (1, 2, 3) where the capacitance deviates from the specified value.

Remedy: - check the parameterized value of the filter capacitance (p0221).
- check the correct wiring of the Voltage Sensing Module (VSM):
Differential voltages u12 and u23 must be present at the 100 V/690 V inputs of the VSM; the phase currents of the line filter must be connected to the 10 V inputs through a current - voltage converter.
- check the alarm limits for the permissible filter capacitance deviation (p3676).
- check the normalization of the line supply voltage measurement using the VSM (p3660).
- check the normalization of the filter current measurement using the VSM (p3670).
- check the line filter capacitors and if required, replace the line filter.
See also: p0221, p3660, p3670, p3676

Reaction upon F: NONE (OFF1, OFF2)

Acknowledge upon F: IMMEDIATELY (POWER ON)

F06300 Infeed: Line voltage too high at power on

Reaction: OFF2 (NONE, OFF1)

Acknowledge: IMMEDIATELY (POWER ON)

Cause: The RMS line supply voltage Vrms was so high when powering-up that controlled operation is not possible without exceeding the permissible maximum voltage in the DC link (p0280).
Fault condition: Vrms * 1.5 > p0280.
Fault value (r0949, floating point):
Lowest possible controlled DC link voltage for the line supply voltage presently connected.
See also: p0280

Remedy: - check the line supply voltage
- check the maximum DC link voltage and if required, increase (p0280).
- check the line supply voltage and compare with the actual line supply voltage (p0210).
- check whether the power module is dimensioned for the line supply voltage actually being used.
See also: p0210, p0280

A06301 (F) Infeed: Line overvoltage

Reaction: NONE

Acknowledge: NONE

Cause: The filtered (steady-state) value of the rms line supply voltage Vrms is higher than the alarm threshold (p0281).
Alarm condition: Vrms < p0281 * p0210.
Alarm value (r2124, floating point):
Actual steady-state line supply voltage.
See also: p0281

Remedy: - check the line supply.
- check the line supply voltage (p0210).
- check the alarm threshold (p0281).
See also: p0210, p0281

Reaction upon F: NONE (OFF1, OFF2)

Acknowledge upon F: IMMEDIATELY (POWER ON)

© Siemens AG, 2005. All rights reserved

F06310 (A) Infeed: Supply voltage (p0210) incorrectly parameterized

Reaction: NONE (OFF1, OFF2)

Acknowledge: IMMEDIATELY (POWER ON)

Cause: After pre-charging was completed, the line supply voltage Vrms was calculated using the measured DC link voltage.
This voltage Vrms is not within the tolerance range of the supply voltage.
The following applies for the tolerance range: 85 % * p0210 < Vrms < 110 % * p0210.
Alarm value (r2124, floating point):
Line supply voltage Vrms present.
See also: p0210

Remedy: - check the parameterized supply voltage and if required change (p0210).
- check the line supply voltage.
See also: p0210

Reaction upon A: NONE

Acknowledge upon A: NONE

A06350 (F) Infeed: Measured line frequency too high

Reaction: NONE

Acknowledge: NONE

Cause: The actual line frequency f_line is higher than the parameterized alarm threshold (f_line > p0211 * p0284).
The alarm can be output in two operating states:
1. During the power-on phase of the infeed unit.
Consequence:
Synchronization of the infeed to the line supply is interrupted and is restarted.
2. While the infeed is operational.
Consequence:
The infeed remains in the operating (run) state and alarm A6350 is output. This signifies a critical operational fault.
Alarm value (r2124, floating point):
Actual line frequency determined.
See also: p0284

Remedy: - check the parameterized line frequency and if required change (p0211).
- check the alarm threshold (p0284).
- check the line supply.
- check the line supply quality.
See also: p0211, p0284

Reaction upon F: NONE (OFF1, OFF2)

Acknowledge upon F: IMMEDIATELY (POWER ON)

A06351 (F) Infeed: Measured line supply frequency too low

Reaction: NONE

Acknowledge: NONE

Cause: The actual line frequency f_line is lower than the parameterized alarm threshold (f_line < p0211 * p0285).
The alarm can be output in two operating states:
1. During the power-on phase of the infeed unit.
Consequence:
Synchronization of the infeed to the line supply is interrupted and is restarted.
2. While the infeed is operational.
Consequence:
The infeed remains in the operating (run) state and alarm A6351 is output. This signifies a critical operational fault.
Alarm value (r2124, floating point):
Actual line frequency determined.
See also: p0285

© Siemens AG, 2005. All rights reserved

Remedy: - check the parameterized line frequency and if required change (p0211).
- check the alarm threshold (p0285).
- check the line supply.
- check the line supply quality.
See also: p0211, p0285

Reaction upon F: NONE (OFF1, OFF2)

Acknowledge upon F: IMMEDIATELY (POWER ON)

A06400 Infeed: Line supply data identification selected/active

Reaction: NONE

Acknowledge: NONE

Cause: Line supply data identification selected/active.
The line inductance and the DC link capacitance are measured at the next pulse enable.
See also: p3410

Remedy: No remedial action required.

F06500 Infeed: Line synchronization not possible

Reaction: OFF2 (OFF1)

Acknowledge: IMMEDIATELY (POWER ON)

Cause: The line synchronization is not possible within the monitoring time.
The infeed was re-synchronized to the line supply because it was interrupted due to a line frequency that was determined to be either too low or too high.
After 20 attempts, synchronization - and therefore also the power-on operation - were interrupted.

Remedy: - check the parameterized line frequency and if required change (p0211).
- check the fault thresholds (p0284, p0285).
- check the line supply.
- check the line supply quality.
See also: p0211, p0284, p0285

A06601 (F) Infeed: Current offset measurement interrupted

Reaction: NONE

Acknowledge: NONE

Cause: Defective current measurement or a DC current is present during the offset measurement.
Alarm value (r2124, decimal):
1: Excessively high phase current has occurred during the current-offset calibration.
2: The measured current - offset is greater than the 3% of the maximum permissible converter current (e.g. due to a ground fault in the DC link).

Remedy: Re alarm value = 1:
- possible counter-measure if there is no line contactor: Switch-in the line supply for a sufficiently long time before OFF1 = 1.
Re alarm value = 2:
- defective current measurement or a DC current is present during the offset measurement.
- check the DC link for a ground fault.

Reaction upon F: NONE (OFF1, OFF2)

Acknowledge upon F: IMMEDIATELY (POWER ON)

© Siemens AG, 2005. All rights reserved

A06602 (F) Infeed: Current offset measurement not possible

Reaction: NONE

Acknowledge: NONE

Cause: After an OFF1 = 1 no valid current offset measurement was able to be made within the monitoring time (p3491) before closing the line contactor.
The phase current measurement calibration is interrupted. The current offset is set to 0.
See also: p3491

Remedy: - check the DC link for a ground fault. A ground fault can destroy parts and components!
- Check the monitoring time setting and if required increase (p3491). At least 100 ms are required for the current calibration (p3491 > 100 ms).
Notice:
If the current measurement is not calibrated, then under certain circumstances, the quality of the DC link control will be reduced.
See also: p3491

Reaction upon F: NONE (OFF1, OFF2)

Acknowledge upon F: IMMEDIATELY (POWER ON)

A06800 (F) Infeed: Maximum steady-state DC link voltage reached

Reaction: NONE

Acknowledge: NONE

Cause: The DC link voltage setpoint has reached the maximum steady-state voltage parameterized in p0280.
The DC link voltage is increased by the modulation depth reserve controller for the following reasons:
- modulation depth reserve is too low (p3480).
- line supply voltage is too high.
- supply voltage (p0210) parameterized to be too low.
- excessively high setpoint for the reactive line current.

Remedy: - check the line supply voltage setting (p0210).
- check the line supply for an overvoltage condition.
- reduce the modulation depth reserve (p3480).
- reduce the reactive current setpoint.
See also: p0210, p0280, p3480

Reaction upon F: NONE (OFF1, OFF2)

Acknowledge upon F: IMMEDIATELY (POWER ON)

F07011 Drive: Motor overtemperature

Reaction: OFF2 (NONE, OFF1, OFF3, STOP1, STOP2)

Acknowledge: IMMEDIATELY

Cause: KTY:
The motor temperature has exceeded the fault threshold (p0605) or the timer stage (p0606) after the alarm threshold was exceeded (p0604) has expired.
VECTOR: The response parameterized in p0610 becomes active.
PTC:
The response threshold of 1650 Ohm was exceeded and the timer stage (p0606) has expired.
VECTOR: The response parameterized in p0610 becomes active.
Possible causes:
- motor is overloaded.
- motor ambient temperature too high.
See also: p0604, p0605, p0606, p0610

Remedy: - reduce the motor load.
- check the ambient temperature.
See also: p0604, p0605, p0606

© Siemens AG, 2005. All rights reserved

A07015 Drive: Motor temperature sensor fault, alarm

Reaction: NONE

Acknowledge: NONE

Cause: An error was detected when evaluating the temperature sensor set in p0600 and p0601.
With the fault, the time in p0607 is started. If the fault is still present after this time has expired, then fault F07016 is output; however, at the earliest, 1 s after alarm A07015.
Possible causes:
- wire breakage or sensor not connected (KTY: R > 1630 Ohm).
- measured resistance too low (PTC: R < 30 Ohm, KTY: R < 340 Ohm).
Note:
For induction motors, the model value is selected for the temperature monitoring.
For synchronous motors, the temperature monitoring is disabled and the ambient temperature is displayed in r0035.

Remedy: - check that the sensor is connected correctly.
- check the parameterization (p0600, p0601).
See also: p0600, p0601, p0607

F07016 Drive: Motor temperature sensor fault, fault

Reaction: OFF1 (NONE, OFF2, OFF3, STOP1, STOP2)

Acknowledge: IMMEDIATELY

Cause: An error was detected when evaluating the temperature sensor set in p0600 and p0601.
Possible causes:
- wire breakage or sensor not connected (KTY: R > 1630 Ohm).
- measured resistance too low (PTC: R < 30 Ohm, KTY: R < 340 Ohm).
Note:
For induction motors, the model value is selected for the temperature monitoring.
For synchronous motors, the temperature monitoring is disabled and the ambient temperature is displayed in r0035.
If alarm A07015 is present, the time in p0607 is started. If the fault is still present after this time has expired, then fault F07016 is output; however, at the earliest, 1 s after alarm A07015.
See also: p0607

Remedy: - check that the sensor is connected correctly.
- check the parameterization (p0600, p0601).
- induction motors: Deactivate temperature sensor fault (p0607 = 0).
See also: p0600, p0601, p0607

F07080 Drive: Incorrect control parameter

Reaction: NONE

Acknowledge: IMMEDIATELY (POWER ON)

Cause: The closed-loop control parameters have been parameterized incorrectly (e.g. p0356 = L_spread = 0).
Fault value (r0949, decimal):
The fault value includes the parameter number involved.
The following parameter numbers only occur as fault values for VECTOR drives:
p0310, for synchronous motors: p0341, p0344, p0350, p0357
The following parameter numbers do not occur as fault values for synchronous motors:
p0354, p0358, p0360
See also: p0310, p0311, p0341, p0344, p0350, p0354, p0356, p0357, p0358, p0360, p0400, p0640, p1082, p1300

Remedy: Modify the parameter indicated in the fault value (r0949) (e.g. p0640 = current limit > 0).
See also: p0311, p0341, p0344, p0350, p0354, p0356, p0358, p0360, p0400, p0640, p1082

© Siemens AG, 2005. All rights reserved

F07082 Macro: Execution not possible

Reaction: NONE

Acknowledge: IMMEDIATELY

Cause: The macro cannot be executed.
Fault value (r0949, hexadecimal):
The fault code is in byte 1, possibly supplementary information is in byte 2 and the high word contains the parameter number involved if this is available.
Fault codes:
Fault for the trigger parameter itself:
-20 called file is not valid for parameter 15
-21 called file is not valid for parameter 700
-22 called file is not valid for parameter 1000
-23 called file is not valid for parameter 1500
-24 data type of a TAG is incorrect (e.g.: Index, number or bit is not U16)
Faults for the parameters to be set:
-25 error level has an undefined value
-26 mode has an undefined value
-27 a value was entered as string in the tag value that is not "DEFAULT"
-31 entered DO type unknown
-32 a device was not able to be found for the determined DO number
-34 a trigger parameter was recursively called
-35 it is not permissible to write to the parameter via macro
-36 check, writing to a parameter unsuccessful, parameter can only be read, not available, incorrect data type, value range or assignment incorrect
-37 source parameter for a BICO connection was not able to be determined
-38 an index was set for a non-indexed parameter
-39 no index was set for an indexed parameter
-41 a bit operation is only permissible for parameters with the parameter format DISPLAY_BIN
-42 a value not equal to 0 or 1 was set for a bit operation
-43 reading the parameter to be changed by the bit operation was unsuccessful
-51 factory setting for DEVICE may only be executed on the DEVICE
-61 the setting of a value was unsuccessful

Remedy: - check the parameter involved.
- check the macro file and BICO interconnection.
See also: p0015, p0700, p1000, p1500

F07083 Macro: ACX file not found

Reaction: NONE

Acknowledge: IMMEDIATELY

Cause: The ACX file (PM file) to be executed was not able to be found in the appropriate directory.
Fault value (r0949, decimal):
Parameter number with which the execution was started.
See also: p0015, p0700, p1000, p1500

Remedy: - check whether the file is saved in the appropriate directory on the CompactFlash card.
Example:
If p0015 = 1501 is set to 1501, then the selected ACX file must be located in the following directory:
... /PMACRO/DEVICE/P15/PM001501.ACX

F07084 Macro: Condition for WaitUntil not fulfilled

Reaction: NONE

Acknowledge: IMMEDIATELY

Cause: The wait condition set in the macro was not fulfilled in a certain number attempts.
Fault value (r0949, decimal):
Parameter number for which the condition was set.

Remedy: Check and correct the conditions for the WaitUntil loop.

© Siemens AG, 2005. All rights reserved

F07085	Drive: Open-loop/closed-loop control parameters changed
Reaction:	NONE
Acknowledge:	IMMEDIATELY (POWER ON)
Cause:	Parameters of the open-loop/closed-loop control had to be changed as they exceeded dynamic limits as a result of other parameters. Fault value (r0949, decimal): The fault value includes the modified parameter number. See also: p0640, p1082, p1300, p1800
Remedy:	It is not necessary to change the parameters as they have already been correctly limited.

F07090	Drive: Upper torque limit less than the lower torque limit
Reaction:	OFF2 (NONE, OFF1, OFF3)
Acknowledge:	IMMEDIATELY
Cause:	The upper torque limit is lower than the lower torque limit.
Remedy:	P1 must be >= P2 if parameter P1 is connected to p1522 and parameter P2 to p1523.

F07100	Drive: Sampling times cannot be reset
Reaction:	NONE
Acknowledge:	IMMEDIATELY
Cause:	When resetting drive parameter (p0976) sampling times cannot be reset using p0111, p0112, p0115. Fault value (r0949, decimal): Parameter whose setting prevents the sampling times being reset. See also: p0110
Remedy:	- continue to work with the set sampling times. - before resetting the drive parameters, set the basic clock cycle p0110[0] to the original value. See also: p0110

F07110	Drive: Sampling time and basic clock cycle do not match
Reaction:	NONE
Acknowledge:	IMMEDIATELY
Cause:	The parameterized sampling times do not match the basic clock cycle. Fault value (r0949, decimal): The fault value specifies the parameter involved. See also: p0110, p0111, p0115
Remedy:	Enter the current controller sampling times so that they are identical to the basic clock cycle, e.g. by selecting p0112. Note which basic clock cycle is selected in p0111. The sampling times in p0115 can only be changed manually in the sampling times preset "Expert" (p0112). See also: p0110, p0111, p0112, p0115

F07111 (A)	Drive: POWER ON due to sampling times
Reaction:	OFF2 (DCBRAKE, OFF1)
Acknowledge:	POWER ON
Cause:	It is not possible to change the sampling times p0112, p0115 in operation. POWER ON is required. Fault value (r0949, decimal): The fault value specifies the parameter involved.
Remedy:	- save (p0009 = 0 and p0977 = 1). - carry-out a POWER ON.
Reaction upon A:	NONE
Acknowledge upon A:	NONE

A07200	Drive: Master control ON/OFF1 command present
Reaction:	NONE
Acknowledge:	NONE
Cause:	The ON/OFF1 command is not 0, either via binector input p0840 (current CDS) or in control word p3982 bit 0.
Remedy:	The signal at binector input p0840 (actual CDS) as well as p3982 bit 0 must be 0.

© Siemens AG, 2005. All rights reserved

F07210 Master control PC/AOP inhibited

Reaction: NONE

Acknowledge: IMMEDIATELY

Cause: The transfer of master control is disabled via binector input p3985.

Remedy: Change the signal via binector input p3985.

F07220 (N, A) Drive: Master control by PLC withdrawn in operation

Reaction: OFF1 (NONE, OFF2, OFF3, STOP1, STOP2)

Acknowledge: IMMEDIATELY

Cause: The "control by PLC" signal was withdrawn in operation.
- interconnection of the binector input for "control by PLC" is incorrect (p0854).
- the higher-level control has withdrawn the "control by PLC" signal in operation.
- data transfer via the fieldbus (master - drive) was interrupted in operation.

Remedy: - check the interconnection of the binector input for "control by PLC" (p0854).
- check the "control by PLC" signal and, if required, switch-in.
- check the data transfer via the fieldbus (master - drive).
Note:
If the drive should continue to operate after withdrawing "control by PLC" then fault response must be parameterized to NONE.

Reaction upon N: NONE

Acknowledge upon N: NONE

Reaction upon A: NONE

Acknowledge upon A: NONE

F07300 (A) Drive: Line contactor feedback signal missing

Reaction: OFF2 (NONE)

Acknowledge: IMMEDIATELY

Cause: - the line contactor was not able to be closed within the time in p0861.
- the line contactor was not able to be opened within the time in p0861.
- the line contactor has dropped-out in operation.
- the line contactor has closed although the drive converter is powered-down.

Remedy: - check the setting of p0860.
- check the feedback circuit from the line contactor.
- increase the monitoring time in p0861.
See also: p0860, p0861

Reaction upon A: NONE

Acknowledge upon A: NONE

F07320 Drive: Automatic restart aborted

Reaction: OFF2

Acknowledge: IMMEDIATELY

Cause: - The specified number of restart attempts (p1211) has been completely used up because within the monitoring time p1213 the alarms were not able to be acknowledged. The number of restart attempts (p1211) is decremented at each new start attempt.
- there is no active ON command.
- the monitoring time for the power module (p0857) has expired.
- when exiting commissioning or at the end of the motor identification routine or the speed controller optimization, the drive unit is not automatically powered-up again.
Fault value (r0949, hexadecimal):
Only for internal Siemens troubleshooting.

Remedy: - increase the number of restart attempts (p1211). The actual number of starting attempts is displayed in r1214.
- increase the delay time in p1212 and/or the monitoring time in p1213.
- issue an ON command (p0840).
- either increase or disable the monitoring time of the power module in p0857.

© Siemens AG, 2005. All rights reserved

A07321	Drive: Automatic restart active
Reaction:	NONE
Acknowledge:	NONE
Cause:	The automatic restart is active. When the line supply returns and/or the fault causes are removed, the drive is automatically restarted. The pulses are enabled and the motor starts to rotate.
Remedy:	- the automatic restart function can be disabled using p1210 = 0. - the automatic restart operation can also be directly interrupted by withdrawing the power-on command (refer to p0840).

F07330	FlyRestart: Measured search current too low
Reaction:	OFF2 (NONE, OFF1)
Acknowledge:	IMMEDIATELY
Cause:	During a flying restart, it was identified that the search current reached is too low. It is possible that the motor is not connected.
Remedy:	Check the motor feeder cables.

F07331	FlyRestart: Not supported.
Reaction:	OFF2 (NONE, OFF1)
Acknowledge:	IMMEDIATELY
Cause:	For operation with V/f characteristic, the flying restart function for permanent-magnet synchronous motors is not supported. The flying restart function should be de-activated.
Remedy:	De-select the flying restart function (P1200=0).

A07350 (F)	Drive: Measuring probe parameterized to a digital output
Reaction:	NONE
Acknowledge:	NONE
Cause:	The measuring probe is connected to a bi-directional digital input/output and the terminal is set as output. Alarm value (r2124, decimal): 9: DI/DO 9 (X122.8) 10: DI/DO 10 (X122.10) 11: DI/DO 11 (X122.11) 13: DI/DO 13 (X132.8) 14: DI/DO 14 (X132.10) 15: DI/DO 15 (X132.11)
Remedy:	- set the terminal as input (p0728). - de-select the measuring probe (p0488, p0489, p0580).
Reaction upon F:	OFF1
Acknowledge upon F:	IMMEDIATELY

A07400 (N)	Drive: DC link voltage maximum controller active
Reaction:	NONE
Acknowledge:	NONE
Cause:	The DC link voltage controller has been activated because the upper switch-in threshold has been exceeded (r1242). The ramp-down times are automatically increased in order to maintain the DC link voltage (r0026) within the permissible limits. There is a system deviation between the setpoint and actual speeds. When the DC link voltage controller is switched-out (disabled), this is the reason that the ramp-function generator output is set to the speed actual value. See also: p1240

© Siemens AG, 2005. All rights reserved

Remedy: If the controller is not to intervene:
- increase the ramp-down times.
- disable the Vdc max controller

If the ramp-down times are not to be changed:
- use a chopper or regenerative feedback unit

Reaction upon N: NONE

Acknowledge upon N: NONE

A07401 (N) Drive: DC link voltage maximum controller deactivated

Reaction: NONE

Acknowledge: NONE

Cause: The Vdc_max controller can no longer maintain the DC link voltage (r0026) below the limit value (r1242) and was therefore switched-out (disabled).
- the line supply voltage is permanently higher than specified for the power module.
- the motor is permanently in the regenerative mode as a result of a load that is driving the motor.

Remedy:
- check whether the input voltage is within the permissible range.
- check whether the load duty cycle and load limits are within the permissible limits.

Reaction upon N: NONE

Acknowledge upon N: NONE

A07402 (N) Drive: DC link voltage minimum controller active

Reaction: NONE

Acknowledge: NONE

Cause: The DC link voltage controller has been activated as the lower switch-in threshold has been fallen below (r1246). The kinetic energy of the motor is used in order to buffer the DC link. This brakes the drive.
See also: p1240

Remedy: The alarm disappears when power supply returns.

Reaction upon N: NONE

Acknowledge upon N: NONE

F07403 Drive: Lower DC link voltage threshold reached

Reaction: OFF1 (NONE, OFF2, OFF3)

Acknowledge: IMMEDIATELY

Cause: The DC link voltage monitoring is active (p1240 = 2, 3) and the lower DC link voltage threshold (p1248) was reached in the "Operation" state.

Remedy:
- check the line supply voltage.
- check the infeed module
- reduce the lower DC link threshold (p1248).
- switch-out (disable) the DC link voltage monitoring (p1240 = 0).

F07404 Drive: Upper DC link voltage threshold reached

Reaction: OFF2 (NONE, OFF1, OFF3)

Acknowledge: IMMEDIATELY

Cause: The DC link voltage monitoring is active (p1240 = 1, 3) and the upper DC link voltage threshold (p1244) was reached in the "Operation" state.

Remedy:
- check the line supply voltage.
- check the infeed module or the Braking Module.
- increase the upper DC link voltage threshold (p1244).
- switch-out (disable) the DC link voltage monitoring (p1240 = 0).

F07405 (N, A) Drive: Kinetic buffering minimum speed not reached

Reaction: OFF2 (DCBRAKE, OFF1, OFF3, STOP1, STOP2)

Acknowledge: IMMEDIATELY

Cause: During kinetic buffering the speed fell below minimum speed (p1257) and the line supply did not return.

© Siemens AG, 2005. All rights reserved

Remedy: Check the speed threshold for the Vdc_min controller (kinetic buffering) (p1257).
See also: p1257
Reaction upon N: NONE
Acknowledge upon N: NONE
Reaction upon A: NONE
Acknowledge upon A: NONE

F07406 (N, A) Drive: Kinetic buffering maximum time exceeded

Reaction: OFF3 (DCBRAKE, OFF1, OFF2, STOP1, STOP2)
Acknowledge: IMMEDIATELY
Cause: The maximum buffer time (p1255) has been exceeded but the line supply has not returned.
Remedy: Check the time threshold for Vdc-min controller (kinetic buffering) (p1255).
See also: p1255
Reaction upon N: NONE
Acknowledge upon N: NONE
Reaction upon A: NONE
Acknowledge upon A: NONE

A07409 Drive: V/f control, current limiting controller active

Reaction: NONE
Acknowledge: NONE
Cause: The current limiting controller of the V/f control was activated because the current limit was exceeded.
Remedy: The alarm is automatically withdrawn when increasing the current limit (p0640), reducing the load or using a slower up ramp for the setpoint (reference) speed.

F07410 Drive: Current controller output limited

Reaction: OFF2 (NONE, OFF1)
Acknowledge: IMMEDIATELY
Cause: The condition "I_act = 0 and Uq_set_1 longer than 16 ms at its limit" is present and can be caused by the following:
- motor not connected or motor contactor open.
- no DC link voltage present.
- Motor Module defective.
- the "flying restart" function is not activated.

Remedy:
- connect the motor or check the motor contactor.
- check the DC link voltage (r0070).
- check the Motor Module.
- activate the "flying restart" function (p1200).

F07411 Drive: Flux controller output limited

Reaction: OFF2 (NONE, OFF1)
Acknowledge: IMMEDIATELY
Cause: The specified flux setpoint cannot be reached although 90% of the maximum current has been specified.
- incorrect motor data.
- motor data and motor configuration (star/delta) do not match.
- the current limit has been set too low for the motor.
- induction motor (sensorless, open-loop controlled) in I2t limiting.
- the Motor Module is too small.

Remedy:
- correct the motor data.
- check the motor configuration.
- correct the current limits (p0640, p0323).
- reduce the induction motor load.
- if required, use a larger Motor Module.

© Siemens AG, 2005. All rights reserved

F07412 Drive: Commutation angle incorrect (motor model)

Reaction: ENCODER (NONE, OFF2)

Acknowledge: IMMEDIATELY

Cause: An incorrect commutation angle was detected, that can result in a positive coupling in the speed controller. The comparison of the pole position angle from the encoder and the motor model resulted in an excessively high value (> 80 ° electrical).
- the motor encoder is incorrectly adjusted with respect to the magnet position.
- the motor encoder is damaged.
- the angular commutation offset is incorrectly set (p0431).
- data to calculate the motor model has been incorrectly set (p0356 (motor-stator leakage inductance) and/or p0350 (motor-stator resistance) and/or p0352 (cable resistance).
- the changeover speed for the motor model is too low (p1752). The monitoring function only becomes effective above the changeover speed.

Remedy:
- if the encoder mounting was changed - re-adjust the encoder.
- replace the defective motor encoder.
- correctly set the angular commutation offset (p0431).
- correctly set the motor stator leakage inductance, motor-stator resistance and cable resistance (p0356, p0350, p0352).
- increase the changeover speed for the motor model (p1752).

F07413 Drive: Commutation angle incorrect (pole position identification)

Reaction: OFF2 (ENCODER, NONE)

Acknowledge: IMMEDIATELY

Cause: An incorrect commutation angle was detected, that can result in a positive coupling in the speed controller.
- within the pole position identification routine (p1982 = 2):
A difference of > 45° electrical to the encoder angle was determined.
- for VECTOR, within the encoder adjustment (p1990 = 2):
A difference of > 6 ° electrical to the encoder angle was determined.

Remedy:
- correctly set the angular commutation offset (p0431).
- re-adjust the motor encoder after the encoder has been replaced.
- replace the defective motor encoder.
- check the pole position identification routine. If the pole position identification routine is not suitable for this motor type, then disable the plausibility check (p1982 = 0).

F07414 Drive: Encoder serial number changed

Reaction: ENCODER (NONE, OFF2)

Acknowledge: IMMEDIATELY

Cause: The serial number of the motor encoder of a synchronous motor has changed. The change was only checked for encoders with serial number (e.g. EnDat encoders) and build-in motors (e.g. p300 = 401) or third-party motors (p0300 = 2).
Cause 1:
The motor with integrated and adjusted encoder was replaced.
Cause 2:
The encoder was replaced.
Cause 3:
A third-party, build-in or linear motor was re-commissioned.
Cause 4:
The firmware was updated to a version that checks the encoder serial number.

Remedy:
Re causes 1, 4:
Accept the new serial number with p0440 = 1.
Re causes 2, 3:
Carry-out an automatic adjustment using the pole position identification routine. First, accept the serial number with p0440 = 1. Acknowledge the fault. Initiate the pole position identification routine with p1990 = 1. Then check that the pole position identification routine is correctly executed.
SERVO: If a pole position identification technique is selected in p1980, and if p0301 does not contain a motor type with an encoder adjusted in the factory, then p1990 is automatically activated.
or
Set the adjustment using parameter p0431. In this case, the new serial number is automatically accepted.
or
Mechanically adjust the encoder. Accept the new serial number with p0440 = 1.

© Siemens AG, 2005. All rights reserved

N07415 (F)	Drive: Angular commutation offset transfer running
Reaction:	OFF2
Acknowledge:	NONE
Cause:	The angular commutation offset was automatically determined using p1990 = 1. This fault causes the pulses to be cancelled - this is necessary to transfer the angular commutation offset to p0431. See also: p1990
Remedy:	The fault can be acknowledged without any additional measures.
Reaction upon F:	OFF2
Acknowledge upon F:	IMMEDIATELY

F07420	Drive: Current setpoint filter natural frequency > Shannon frequency
Reaction:	NONE (OFF1, OFF2, OFF3)
Acknowledge:	IMMEDIATELY (POWER ON)
Cause:	One of the filter natural frequencies is greater than the Shannon frequency. The Shannon frequency is calculated according to the following formula: 0.5 / p0115[0] Fault value (r0949, hexadecimal): Bit 0: Filter 1 (p1658, p1660) Bit 1: Filter 2 (p1663, p1665) Bit 2: Filter 3 (p1668, p1670) Bit 3: Filter 4 (p1673, p1675)
Remedy:	- reduce the numerator or denominator natural frequency of the current setpoint filter involved. - reduce the current controller sampling time (p0115[0]). - switch-out the filter involved (p1656).

F07421	Drive: Speed setpoint filter natural frequency > Shannon frequency
Reaction:	NONE (OFF1, OFF2, OFF3)
Acknowledge:	IMMEDIATELY (POWER ON)
Cause:	One of the filter natural frequencies is greater than the Shannon frequency. The Shannon frequency is calculated according to the following formula: 0.5 / p0115[1] Fault value (r0949, hexadecimal): Bit 0: Filter 1 (p1417, p1419) Bit 1: Filter 2 (p1423, p1425) Bit 8 ... 15: Data set number (starting from zero).
Remedy:	- reduce the numerator or denominator natural frequency of the speed setpoint filter involved. - reduce the speed controller sampling time (p0115[1]). - switch-out the filter involved (p1414).

F07422	Drive: Reference model natural frequency > Shannon frequency
Reaction:	NONE (OFF1, OFF2, OFF3)
Acknowledge:	IMMEDIATELY (POWER ON)
Cause:	The natural filter frequency of the PT2 element for the reference model (p1433) is greater than the Shannon frequency. The Shannon frequency is calculated according to the following formula: 0.5 / p0115[1]
Remedy:	- reduce the natural frequency of PT2 element for reference model (p1433). - reduce the speed controller sampling time (p0115[1]).

F07430	Drive: Changeover to open-loop torque controlled operation not possible
Reaction:	OFF2 (NONE, OFF1, OFF3)
Acknowledge:	IMMEDIATELY
Cause:	For sensorless operation, the converter cannot change over to closed-loop torque-controlled operation (BI: p1501).
Remedy:	Do not attempt to cover over to closed-loop torque-controlled operation.

© Siemens AG, 2005. All rights reserved

F07431 **Drive: Changeover to sensorless operation not possible**

Reaction: OFF2 (OFF1)

Acknowledge: IMMEDIATELY

Cause: For closed-loop torque control, the converter cannot change over to sensorless operation (p1404).

Remedy: Do not attempt to change over to sensorless operation.

F07432 **Drive: Synchronous motor without overvoltage protection**

Reaction: OFF2 (OFF1)

Acknowledge: IMMEDIATELY

Cause: Under voltage conditions, a synchronous motor can generate an overvoltage condition that can destroy the drive system.
Fault value (r0949, hexadecimal):
Associated Drive Data Set (DDS).

Remedy: Overvoltage protection can be implemented in the following ways:
- limit the maximum speed (p1082) without any additional protection.
The maximum speed without protection is calculated as follows:
p1082[RPM] <= 9590/p0316[Nm/A] for rotating motors, and
p1082[m/min] <= 60257.45/p0316[N/A] for linear motors.
- use a voltage protection module (VPM) in conjunction with the function "safe standstill" (p9601, p9801).
When a fault condition exists, the VPM short-circuits the motors. During the short-circuit, the pulses must be cancelled - this means that the terminals for the safe standstill must be connected to the VPM.
When using a VPM, p0643 must be set to 1.
See also: p0643

F07433 **Drive: Closed-loop control with encoder is not possible as the encoder has not been unparked**

Reaction: NONE (OFF1, OFF2, OFF3)

Acknowledge: IMMEDIATELY

Cause: The changeover to closed-loop control with encoder is not possible as the encoder has not been unparked.

Remedy: Check whether the encoder firmware supports the parking/unparking function (r481.6=1).
Upgrade the firmware.
For long-stator motors (p3870.0=1):
The encoder must have complete the unparking procedure (r3875.0=1) before a changeover can be made to closed-loop control with encoder. The encoder is unparked using a 0/1 edge at BI: p3876 and remains unparked until the signal returns to 0.

F07500 **Drive: Power module data set PDS not configured**

Reaction: NONE

Acknowledge: IMMEDIATELY

Cause: Only for controlled line supply infeed/regenerative feedback units:
The power module data set was not configured - this means that a data set number was not entered into the drive data set.
Fault value (r0949, decimal):
Drive data set number of p0185.

Remedy: The index of the power module data set associated with the drive data set should be entered into p0185.

F07501 **Drive: Motor Data Set MDS not configured**

Reaction: NONE

Acknowledge: IMMEDIATELY

Cause: Only for power modules:
The motor data set was not configured - this means that a data set number was not entered into the associated drive data set.
Fault value (r0949, decimal):
The fault value includes the drive data set number of p0186.

Remedy: The index of the motor data set associated with the drive data set should be entered into p0186.

© Siemens AG, 2005. All rights reserved

F07502 Drive: Encoder Data Set EDS not configured

Reaction: NONE

Acknowledge: IMMEDIATELY

Cause: Only for power modules:
The encoder data set was not configured - this means that a data set number was not entered into the associated drive data set.
Fault value (r0949, decimal):
The fault value includes the drive data set number of p0187, p0188 and p0189.
The fault value is increased by 100 * encoder number (e.g. for p0189: Fault value 3xx with xx = data set number).

Remedy: The index of the encoder data set associated with the drive data set should be entered into p0187 (1st encoder), p0188 (2nd encoder) and p0189 (3rd encoder).

A07504 Drive: Motor data set is not assigned to a drive data set

Reaction: NONE

Acknowledge: NONE

Cause: A motor data set is not assigned to a drive object.
All of the existing motor data sets in the drive data sets must be assigned using the MDS number (p0186[0...n]).
Alarm value (r2124, decimal):
Number of the motor data set that has not been assigned.
See also: p0186

Remedy: In the drive data sets, assign the non-assigned motor data set using the MDS number (p0186[0...n]).

F07510 Drive: Identical encoder in the drive data set

Reaction: NONE

Acknowledge: IMMEDIATELY

Cause: More than one encoder with identical component number is assigned to a single drive data set. In one drive data set, it is not permissible that identical encoders are operated together.
Fault value (r0949, decimal):
1000*first identical encoder + 100*second identical encoder + drive data set.
Example:
Fault value = 1203 means:
In drive data set 3, the first (refer to p0187[3]) and second encoder (refer to p0188[3]) are identical.
See also: p0141, p0187, p0188, p0189

Remedy: Assign the drive data set to different encoders.
See also: p0141, p0187, p0188, p0189

F07511 Drive: Enc. used multiple

Reaction: NONE

Acknowledge: IMMEDIATELY

Cause: Each encoder may only be assigned to one drive and within a drive must - in each drive data set - either always be encoder 1, always encoder 2 or always encoder 3. This unique assignment has been violated.
Fault value (r0949, decimal):
The two parameters in coded form, that refer to the same component number.
First parameter:
Index: First and second decimal position
Parameter number: Third decimal position (1 for p0187, 2 for p0188, 3 for p0189)
Drive number: Fourth and fifth decimal position
Second parameter:
Index: Sixth and seventh decimal position
Parameter number: Eighth decimal position (1 for p0187, 2 for p0188, 3 for p0189)
Drive number: Ninth and tenth decimal position
See also: p0141

Remedy: Correct the double use of a component number using the two parameters coded in the fault value.

© Siemens AG, 2005. All rights reserved

A07512 Drive: Encoder data set changeover cannot be parameterized

Reaction: NONE

Acknowledge: NONE

Cause: A changeover of the encoder data set is prepared using p0187, p0188 or p0189. For this firmware release, an encoder data set changeover is not supported. Commissioning can only be exited with the correct parameterization.
Alarm value (r2124, decimal):
Parameter number with incorrect indices (p0187, p0188 or p0189).
See also: p0187, p0188, p0189

Remedy: The selectors to the encoder data sets (p0187, p0188, p0189) must, for all data sets, point to the same encoder data set.
The following must apply:
p0187[0] = p0187[1] = ... = p0187[n]
p0188[0] = p0188[1] = ... = p0188[n]
p0189[0] = p0189[1] = ... = p0189[n]

A07514 Drive: Data structure does not correspond to the interface module

Reaction: NONE

Acknowledge: NONE

Cause: The interface mode "SIMODRIVE 611 universal" was set (p2038 = 1) and the data structure does not correspond to this mode.
For the data structure, the following rule must be complied with.
Within the group of 8 drive data sets, the assignment to the motor data set must be set the same:
p0186[0] = p0186[1] = ... = p0186[7]
p0186[8] = p0186[9] = ... = p0186[15]
p0186[16] = p0186[17] = ... = p0186[23]
p0186[24] = p0186[25] = ... = p0186[31]
See also: p0180, p0186, p2038

Remedy: - structure the data according to the rules of the "SIMODRIVE 611 universal" interface mode.
- check the interface mode (p2038).

A07515 Drive: Power module and motor incorrectly connected

Reaction: NONE

Acknowledge: NONE

Cause: A power module (via PDS) was assigned to a motor (via MDS) in a drive data set that is not connected in the target topology.
Alarm value (r2124, decimal):
Number of the incorrectly parameterized drive data set.

Remedy: - assign the drive data set to a combination of motor and power module permitted by the target topology.
- adapt the target topology.
See also: p0121, p0131, p0186

F07516 Drive: Re-commission the data set

Reaction: NONE

Acknowledge: IMMEDIATELY

Cause: The assignment between the drive data set and motor data set (p0186) or between the drive data set and the encoder data set was modified (p0187). This is the reason that the drive data set must re-commissioned.
Fault value (r0949, decimal):
Drive data set to be re-commissioned.

Remedy: Commission the drive data set specified in the fault value (r0949).

A07530 Drive: Drive Data Set DDS not present

Reaction: NONE

Acknowledge: NONE

Cause: The selected drive data set is not available (p0837 > p0180). The drive data set was not changed-over.
See also: p0180, p0820, p0821, p0822, p0823, p0824, r0837

Remedy: - select the existing drive data set.
- set-up additional drive data sets.

© Siemens AG, 2005. All rights reserved

A07541 Drive: Not possible to changeover data set

Reaction: NONE

Acknowledge: NONE

Cause: The selected drive data set changeover and the assigned motor changeover are not possible and are not carried-out. For synchronous motors, the motor contactor may only be switched for actual speeds less than the speed at the start of field weakening (r0063 < p0348).
See also: r0063, p0348

Remedy: Reduce the speed below the speed at the start of field weakening.

A07550 (F, N) Drive: Not possible to reset encoder parameters

Reaction: NONE

Acknowledge: NONE

Cause: When carrying-out a factory setting (e.g. using p0970 = 1), it was not possible to reset the encoder parameters. The encoder parameters are directly read out of the encoder via DRIVE-CLiQ.
Alarm value (r2124, decimal):
Component number of the encoder involved.

Remedy: - repeat the operation.
- check the DRIVE-CLiQ connection.

Reaction upon F: NONE (DCBRAKE, OFF1, OFF2, OFF3, STOP1, STOP2)

Acknowledge upon F: IMMEDIATELY (POWER ON)

Reaction upon N: NONE

Acknowledge upon N: NONE

F07551 Drive encoder: No commutation angle information

Reaction: OFF2 (DCBRAKE)

Acknowledge: IMMEDIATELY (POWER ON)

Cause: The motor encoder used does not supply an absolute commutation angle. This means that synchronous motors cannot be controlled (closed-loop control)
Fault value (r0949, decimal):
Drive data set number

Remedy: - check the encoder parameterization (p0404).
- use an encoder with track C/D, EnDat interface of Hall sensors.
- use an encoder with sinusoidal A/B track for which the motor pole pair number (p0313) is an integer multiple of the encoder pulse number (p0408).
- activate the pole position identification routine (p1982 = 1).

F07552 (A) Drive encoder: Encoder configuration not supported

Reaction: OFF2 (DCBRAKE, NONE, OFF1, OFF3, STOP1, STOP2)

Acknowledge: IMMEDIATELY (POWER ON)

Cause: The requested encoder configuration is not supported. Only bits may be requested in p0404 that are signaled as being supported by the encoder evaluation in r0456.
Fault value (r0949, decimal):
Low byte of the low word: Encoder data set number
High byte of the low word, component number
High word: Reason for the fault: The encoder does not support a function selected in p404:
1: Abs value encoder
3: Square-wave encoder
4: sin/cos encoder
23: Resolver
65535: Other function (compare p452 and p404)

See also: p0404, r0456

© Siemens AG, 2005. All rights reserved

Remedy: - check the encoder parameterization (p0400, p0404).
- use the matching encoder evaluation (r0456).

Reaction upon A: NONE

Acknowledge upon A: NONE

F07553 (A) Drive encoder: Sensor Module configuration not supported

Reaction: OFF2 (DCBRAKE, NONE, OFF1, OFF3, STOP1, STOP2)

Acknowledge: IMMEDIATELY (POWER ON)

Cause: The Sensor Module does not support the requested configuration.
Possible causes:
- bits are set in p0430 (requested functions) that are not set in r0458 (supported functions). This does not apply for bit 19 (safety position actual value sensing), bit 29 (phase correction), bit 30 (amplitude correction) and bit 31 (offset correction).
- p1982 > 0 (pole position identification requested), but r0458 bit 16 = 0 (pole position identification not supported).
Fault value (r0949, decimal):
Encoder data set number.

Remedy: - check the encoder parameterization (p0430).
- check the pole position identification routine (p1982).
- use the matching encoder evaluation (r0458).

Reaction upon A: NONE

Acknowledge upon A: NONE

F07560 Drive encoder: Number of pulses is not to the power of two

Reaction: OFF2 (DCBRAKE, NONE, OFF1, OFF3, STOP1, STOP2)

Acknowledge: IMMEDIATELY (POWER ON)

Cause: For rotary absolute value encoders, the pulse number in p0408 must be to the power of two.
Fault value (r0949, decimal):
The fault value includes the encoder data set number involved.

Remedy: - check the parameterization (p0408, p0404.1, r0458.5).
- if required, upgrade the Sensor Module firmware.

F07561 Drive encoder: Number of multiturn pulses is not to the power of two

Reaction: OFF2 (DCBRAKE, NONE, OFF1, OFF3, STOP1, STOP2)

Acknowledge: IMMEDIATELY (POWER ON)

Cause: The multi-turn resolution in p0421 must be to the power of two.
Fault value (r0949, decimal):
The fault value includes the encoder data set number involved.

Remedy: - check the parameterization (p0421, p0404.1, r0458.5).
- if required, upgrade the Sensor Module firmware.

A07565 (F, N) Drive: Encoder fault/error in PROFIdrive encoder interface 1

Reaction: NONE

Acknowledge: NONE

Cause: An encoder error was signaled for encoder 1 via the PROFIdrive encoder interface (G1_ZSW.15).
Alarm value (r2124, decimal):
Error code from G1_XIST2, refer to the description regarding r0483.

Remedy: Acknowledge the encoder error using the encoder control word (G1_STW.15 = 1).

Reaction upon F: NONE (OFF1, OFF2, OFF3)

Acknowledge upon F: IMMEDIATELY

Reaction upon N: NONE

Acknowledge upon N: NONE

© Siemens AG, 2005. All rights reserved

A07566 (F, N) Drive: Encoder fault/error in PROFIdrive encoder interface 2

Reaction: NONE

Acknowledge: NONE

Cause: An encoder error was signaled for encoder 2 via the PROFIdrive encoder interface (G2_ZSW.15).
Alarm value (r2124, decimal):
Error code from G2_XIST2, refer to the description regarding r0483.

Remedy: Acknowledge the encoder error using the encoder control word (G2_STW.15 = 1).

Reaction upon F: NONE (OFF1, OFF2, OFF3)

Acknowledge upon F: IMMEDIATELY

Reaction upon N: NONE

Acknowledge upon N: NONE

A07567 (F, N) Drive: Encoder fault/error in PROFIdrive encoder interface 3

Reaction: NONE

Acknowledge: NONE

Cause: An encoder error was signaled for encoder 3 via the PROFIdrive encoder interface (G3_ZSW.15).
Alarm value (r2124, decimal):
Error code from G3_XIST2, refer to the description regarding r0483.

Remedy: Acknowledge the encoder error using the encoder control word (G3_STW.15 = 1).

Reaction upon F: NONE (OFF1, OFF2, OFF3)

Acknowledge upon F: IMMEDIATELY

Reaction upon N: NONE

Acknowledge upon N: NONE

F07575 Drive: Motor encoder not ready

Reaction: OFF2 (NONE)

Acknowledge: IMMEDIATELY

Cause: The motor encoder signals that it is not ready.
- initialization of encoder 1 (motor encoder) was unsuccessful.
- the function "parking encoder" is active (selected using the encoder control word G1_STW.14 = 1).
- the Sensor Module is defective.

Remedy: Evaluate other queued faults via encoder 1.

A07580 (F, N) Drive: No Sensor Module with the matching component number

Reaction: NONE

Acknowledge: NONE

Cause: A Sensor Module with the component number specified in p0141 was not found.
Alarm value (r2124, decimal):
Encoder data set involved (index of p0141).

Remedy: Correct p0141.

Reaction upon F: OFF1 (DCBRAKE, NONE, OFF2, OFF3, STOP1, STOP2)

Acknowledge upon F: IMMEDIATELY (POWER ON)

Reaction upon N: NONE

Acknowledge upon N: NONE

© Siemens AG, 2005. All rights reserved

F07800 Drive: No power module present

Reaction: NONE

Acknowledge: IMMEDIATELY

Cause: The power module parameters cannot be read or no parameters are stored in the power module.
See also: r0200

Remedy: Connect the data line to power module and restart the Control Unit (POWER ON).

F07801 Drive: Motor overcurrent

Reaction: OFF2 (NONE, OFF1, OFF3)

Acknowledge: IMMEDIATELY

Cause: The permissible motor limit current was exceeded.
- effective current limit set too low.
- current controller not correctly set.
- motor was braked with an excessively high stall torque correction factor.
- V/f operation: Up ramp was set too short or the load is too high.
- V/f operation: Short-circuit in the motor cable or ground fault.
- V/f operation: Motor current does not match the current of Motor Module.

Note:
Synchronous motor: Limit current= 1.3 * p0323
Induction motor: Limit current= 1.3 * r0209

Remedy:
- check the current limits (p0323, p0640).
- check the current controller (p1715, p1717).
- reduce the stall torque correction factor (p0326).
- increase the up ramp (p1318) or reduce the load.
- check the motor and motor cables for short-circuit and ground fault.
- check the Motor Module and motor combination.

F07802 Drive: Infeed or power module not ready

Reaction: OFF2 (NONE)

Acknowledge: IMMEDIATELY

Cause: After an internal power-on command, the infeed or drive does not signal ready.
- monitoring time is too short.
- DC link voltage is not present.
- associated infeed or drive of the signaling component is defective.
- supply voltage incorrectly set.

Remedy:
- increase the monitoring time (p0857).
- ensure that there is a DC link voltage. Check the DC-link busbar. Enable the infeed.
- replace the associated infeed or drive of the signaling component.
- check the line supply voltage setting (p0210).

See also: p0857

A07805 (N) Drive: Power module I2T overload

Reaction: NONE

Acknowledge: NONE

Cause: Alarm threshold for I2t overload (p0294) of the power module exceeded.
The response parameterized in p0290 becomes active.
See also: p0290

Remedy:
- reduce the continuous load.
- adapt the load duty cycle.
- check the assignment of the rated currents of the motor and Motor Module.

Reaction upon N: NONE

Acknowledge upon N: NONE

© Siemens AG, 2005. All rights reserved

F07810 **Drive: Power module EEPROM without rated data**

Reaction: NONE

Acknowledge: IMMEDIATELY

Cause: No rated data are stored in the power module EEPROM.
See also: p0205, r0206, r0207, r0208, r0209

Remedy: Replace the power module or inform Siemens Customer Service.

F07815 **Drive: Power module has been changed**

Reaction: NONE

Acknowledge: IMMEDIATELY

Cause: The code number of the actual power module does not match the saved number.
Fault value (r0949, decimal):
Number of the incorrect parameter.
See also: r0200, p0201

Remedy: Connect the original power module and power-up the Control Unit again (POWER ON) or set p0201 to r0200 and exit commissioning with p0010 = 0.
For infeeds, the following applies: Commutating reactors or line filters must be used that are clearly specified for the new power module. A line supply and DC link identification routine (p3410 = 5) must then be carried-out. It is not possible to change the power module without re-commissioning the system if the type of infeed (A_Infeed, B_Infeed, S_Infeed), the type of construction/design (Booksize, Chassis) or the voltage class differ between the old and new power modules.
For inverters, the following applies: If the new power module is accepted, then if required, the current limit p0640 can be reduced by a lower maximum current of the power module (r0209) (torque limits stay the same).
If not only the power module is changed, but also the motor, then the motor must be re-commissioning (e.g. using p0010 = 1). This is also necessary if motor data is still to be downloaded via DRIVE-CLiQ.
See also: r0200

A07820 **Drive: Temperature sensor not connected**

Reaction: NONE

Acknowledge: NONE

Cause: The temperature sensor for motor temperature monitoring, specified in p0600, is not available.
- parameter download with "incorrect" setting.
- module with sensor evaluation has been, in the meantime, been removed.

Remedy: - connect the module with temperature sensor.
- set the available temperature sensor (p0600, p0601).
See also: p0600, p0601

A07825 (N) **Drive: Simulation operation activated**

Reaction: NONE

Acknowledge: NONE

Cause: The simulation mode is activated.
The drive can only be powered-up if the DC link voltage is less than 40 V.

Remedy: The alarm automatically disappears if simulation operation is de-activated with p1272 = 0.

Reaction upon N: NONE

Acknowledge upon N: NONE

F07826 **Drive: Simulation operation with DC link voltage too high**

Reaction: OFF2

Acknowledge: IMMEDIATELY

Cause: The simulation mode is activated and the DC link voltage is greater than the permissible value of 40 V.

Remedy: - switch-out (disable) simulation operation (p1272 = 0) and acknowledge the fault.
- reduce the input voltage in order to reach a DC link voltage below 40 V.

© Siemens AG, 2005. All rights reserved

F07840 Drive: Infeed operation missing

Reaction: OFF2 (NONE)

Acknowledge: IMMEDIATELY

Cause: The signal "infeed operation" is not present although the enable signals for the drive have been present for longer than the parameterized monitoring time (p0857).
- infeed not operational.
- interconnection of the binector input for the ready signal is either incorrect or missing (p0864).

Remedy:
- bring the infeed into an operational state.
- check the interconnection of the binector input for the signal "infeed operation" (p0864).
- increase the monitoring time (p0857).

See also: p0857, p0864

F07841 Drive: Infeed operation withdrawn

Reaction: OFF2 (NONE, OFF1, OFF3)

Acknowledge: IMMEDIATELY

Cause: The signal "infeed operation" was withdrawn in operation.
- interconnection of the binector input for the signal "infeed operation" is either incorrect or missing (p0864).
- the enable signals of the infeed were disabled.
- due to a fault, the infeed withdraws the signal "infeed operation".

Remedy:
- check the interconnection of the binector input for the signal "infeed operation" (p0864).
- check the enable signals of the infeed and if required, enable.
- remove and acknowledge an infeed fault.

Note:
If this drive is intended to back-up the DC link regeneratively, then the fault response must be parameterized for NONE so that the drive can continue to operate even after the infeed fails.

A07850 (F) External alarm 1

Reaction: NONE

Acknowledge: NONE

Cause: The BICO signal for "external alarm 1" was triggered.
The condition for this external alarm is fulfilled.
See also: p2112

Remedy: Eliminate the causes of this alarm.

Reaction upon F: NONE (DCBRAKE, OFF1, OFF2, OFF3, STOP1, STOP2)

Acknowledge upon F: IMMEDIATELY (POWER ON)

A07851 (F) External alarm 2

Reaction: NONE

Acknowledge: NONE

Cause: The BICO signal for "external alarm 2" was triggered.
The condition for this external alarm is fulfilled.
See also: p2116

Remedy: Eliminate the causes of this alarm.

Reaction upon F: NONE (DCBRAKE, OFF1, OFF2, OFF3, STOP1, STOP2)

Acknowledge upon F: IMMEDIATELY (POWER ON)

© Siemens AG, 2005. All rights reserved

A07852 (F) External alarm 3

Reaction: NONE
Acknowledge: NONE
Cause: The BICO signal for "external alarm 3" was triggered.
The condition for this external alarm is fulfilled.
See also: p2117
Remedy: Eliminate the causes of this alarm.
Reaction upon F: NONE (DCBRAKE, OFF1, OFF2, OFF3, STOP1, STOP2)
Acknowledge upon F: IMMEDIATELY (POWER ON)

F07860 (A) External fault 1

Reaction: OFF2 (DCBRAKE, NONE, OFF1, OFF3, STOP1, STOP2)
Acknowledge: IMMEDIATELY (POWER ON)
Cause: The BICO signal "external fault 1" was triggered.
See also: p2106
Remedy: Eliminate the causes of this fault.
Reaction upon A: NONE
Acknowledge upon A: NONE

F07861 (A) External fault 2

Reaction: OFF2 (DCBRAKE, NONE, OFF1, OFF3, STOP1, STOP2)
Acknowledge: IMMEDIATELY (POWER ON)
Cause: The BICO signal "external fault 2" was triggered.
See also: p2107
Remedy: Eliminate the causes of this fault.
Reaction upon A: NONE
Acknowledge upon A: NONE

F07862 (A) External fault 3

Reaction: OFF2 (DCBRAKE, NONE, OFF1, OFF3, STOP1, STOP2)
Acknowledge: IMMEDIATELY (POWER ON)
Cause: The BICO signal "external fault 3" was triggered.
See also: p2108, p3111, p3112
Remedy: Eliminate the causes of this fault.
Reaction upon A: NONE
Acknowledge upon A: NONE

© Siemens AG, 2005. All rights reserved

F07900 (N, A) Drive: Motor locked

Reaction: OFF2 (NONE, OFF1, OFF3, STOP1, STOP2)

Acknowledge: IMMEDIATELY

Cause: Motor has been operating at the torque limit longer than the time specified in p2177 and below the speed threshold set in p2175.
This signal can also be initiated if the speed actual value is oscillating and the speed controller output repeatedly goes to its limit.
See also: p2175, p2177

Remedy:
- check that the motor can freely rotate.
- check the torque limit: For a positive direction of rotation r1538, for a negative direction of rotation r1539.
- check the parameter, message "Motor locked" and if required, correct (p2175, p2177).
- check the inversion of the actual value (p0410).
- check the motor encoder connection.
- check the encoder pulse number (p0408).

Reaction upon N: NONE

Acknowledge upon N: NONE

Reaction upon A: NONE

Acknowledge upon A: NONE

F07901 Drive: Motor overspeed

Reaction: OFF2 (NONE, OFF1)

Acknowledge: IMMEDIATELY

Cause: The maximum permissible speed was either positively or negatively exceeded.
The maximum permissible positive speed is formed as follows: Minimum(p1082, CI: p1085) + p2162. The maximum permissible negative speed is formed as follows: Maximum(-p1082, CI: 1088) - p2162.

Remedy: For a positive direction of rotation:
- check r1084 and if required, correct p1082, CI: p1085 and p2162.

For a negative direction of rotation:
- check r1087 and if required, correct p1082, CI: p1088 and p2162.

F07902 (N, A) Drive: Motor stalled

Reaction: OFF2 (NONE, OFF1, OFF3, STOP1, STOP2)

Acknowledge: IMMEDIATELY

Cause: Only for VECTOR drives (refer to p0107):
It was detected that the motor was stalled for a time longer than that entered into p2178.
Fault value (r0949, decimal):
1: Stall detection using r1408.11 (refer to p1744)
2: Stall detection using r1408.12 (refer to p1745)
See also: p1744, p2178

Remedy: For closed-loop speed and torque control with speed encoder:
- check the speed signal (interrupted cable, polarity, pulse number).

If there is no fault, then the fault tolerance can be increased (p1744).
For closed-loop speed and torque control without speed encoder:
- check whether the drive stalls due to the load if the speed setpoint is still zero. If yes, then increase the current setpoint using p1610.
- if the motor excitation (magnetizing) time (r0346) was significantly reduced, then it should be increased again.
- check the current limits (p0640, r0067). If these are too low, then the drive cannot be magnetized.

If there is no fault, then the fault tolerance (p1745) or the delay time (p2178) can be increased.

Reaction upon N: NONE

Acknowledge upon N: NONE

Reaction upon A: NONE

Acknowledge upon A: NONE

© Siemens AG, 2005. All rights reserved

A07903 Drive: Motor speed deviation

Reaction: NONE

Acknowledge: NONE

Cause: The absolute value of the speed difference from the two setpoints (p2151, p2154) and the speed actual value (r2169) exceeds the tolerance threshold (p2163) longer than tolerated (p2164, p2166).
The alarm is only enabled for p2149.0 = 1.
Possible causes could be:
- the load torque is greater than the torque setpoint.
- when accelerating, the torque/current/power limit is reached. If the limits are not sufficient, then it is possible that the drive has been dimensioned too small.
- the speed controller is inhibited (refer to p0856; refer to Kp/Tn adaptation of the speed controller).
- for closed-loop torque control, the speed setpoint does not track the speed actual value.
- for active Vdc controller.
The signal is not generated if the ramp-function generator tracking prevents the setpoint and actual speed from drifting (moving) apart.
Only for VECTOR drives:
For V/f control, the overload condition is detected as the Imax controller is active.
See also: p2149

Remedy: - increase p2163 and/or p2166.
- increase the torque/current/power limits.
- enable the speed controller.
- for closed-loop torque control: The speed setpoint should track the speed actual value.

A07910 (N) Drive: Motor overtemperature

Reaction: NONE

Acknowledge: NONE

Cause: KTY:
The motor temperature has exceeded the alarm threshold (p0604).
VECTOR: The response parameterized in p0610 becomes active.
PTC:
The response threshold of 1650 Ohm was exceeded.
Alarm value (r2124, decimal):
1: No output current reduction.
2: Output current reduction active.
See also: p0604, p0610

Remedy: - check the motor load.
- check the motor ambient temperature.

Reaction upon N: NONE

Acknowledge upon N: NONE

A07920 Drive: Torque too low

Reaction: NONE

Acknowledge: NONE

Cause: The torque deviates from the torque/speed envelope characteristic in the negative direction (too low).
See also: p2181

Remedy: Adapt the load.

A07921 Drive: Torque too high

Reaction: NONE

Acknowledge: NONE

Cause: The torque deviates from the torque/speed envelope characteristic in the positive direction (too high).

Remedy: Adapt the load.

© Siemens AG, 2005. All rights reserved

A07922 **Drive: Torque outside the tolerance**

Reaction: NONE

Acknowledge: NONE

Cause: The torque deviates from the torque/speed envelope characteristic.

Remedy: Adapt the load.

F07923 **Drive: Torque too low**

Reaction: OFF1 (NONE, OFF2, OFF3)

Acknowledge: IMMEDIATELY

Cause: The torque deviates from the torque/speed envelope characteristic in the negative direction (too low).

Remedy: Adapt the load.

F07924 **Drive: Torque too high**

Reaction: OFF1 (NONE, OFF2, OFF3)

Acknowledge: IMMEDIATELY

Cause: The torque deviates from the torque/speed envelope characteristic in the positive direction (too high).

Remedy: Adapt the load.

F07925 **Drive: Torque outside the tolerance**

Reaction: OFF1 (NONE, OFF2, OFF3)

Acknowledge: IMMEDIATELY

Cause: The torque deviates from the torque/speed envelope characteristic.

Remedy: Adapt the load.

A07926 **Drive: Envelope curve, parameter invalid**

Reaction: NONE

Acknowledge: NONE

Cause: Invalid parameter values were entered for the envelope characteristic of the load monitoring.
The following rules apply for the speed thresholds:
p2182 < p2183 < p2184
The following rules apply for the torque thresholds:
p2185 > p2186
p2187 > p2188
p2189 > p2190
Alarm value (r2124, decimal):
Number of the parameter with the invalid value.

Remedy: Set the parameters for the load monitoring according to the applicable rules.

F07930 **Drive: Brake control defective**

Reaction: OFF1 (NONE, OFF2, OFF3)

Acknowledge: IMMEDIATELY

Cause: The Control Unit has detected a brake control fault.
- no motor holding brake connected.
- the motor holding brake control on the Motor Module is faulty.
- a DRIVE-CLiQ communications error has occurred between the Control Unit and the Motor Module involved.
Fault value (r0949, decimal):
10: No brake connected or fault in the Motor Module brake control circuit ("open brake" operation).
11: Defect in the brake control circuit of the Motor Module ("brake open" operation).
20: Short-circuit in the brake winding or fault in the brake control circuit of the Motor Module ("brake open" state).
30: No brake connected, short-circuit in the brake winding or fault in the Motor Module brake control circuit ("close brake" operation).
31: Defect in the brake control circuit of the Motor Module ("close brake" operation).
40: Defect in the brake control circuit of the Motor Module ("brake closed" state).
50: Defect in the brake control circuit of the Motor Module or communications fault between the Control Unit and the Motor Module (brake control diagnostics).

© Siemens AG, 2005. All rights reserved

Remedy: - check the motor holding brake connection.
- check the function of the motor holding brake.
- check whether there is a DRIVE-CLiQ communications error between the Control Unit and the Motor Module involved and if required, carry-out a diagnostics routine for the faults identified.
- check the electrical cabinet design and cable routing for EMC compliance
- replace the Motor Module involved.

A07931 Brake does not open

Reaction: NONE

Acknowledge: NONE

Cause: This alarm is output for r1229.4 = 1.
See also: p1216, r1229

Remedy: - check the functionality of the motor holding brake.
- check the feedback signal (p1223).

A07932 Brake does not close

Reaction: NONE

Acknowledge: NONE

Cause: This alarm is output for r1229.5 = 1.
See also: p1217, r1229

Remedy: - check the functionality of the motor holding brake.
- check the feedback signal (p1222).

F07950 (A) Drive: Motor parameter defective

Reaction: NONE

Acknowledge: IMMEDIATELY

Cause: The motor parameters were incorrectly entered while commissioning (e.g. p0300 = 0, no motor selected)
Fault value (r0949, decimal):
The fault value includes the parameter number involved.
The following parameter numbers only occur as fault values for induction motors:
p0304, p0310, p0320
The following parameter numbers only occur as fault values for synchronous motors:
p0314; only for VECTOR drives: p0305, p0307; only for servo drives: p0316, p0322, p0323; only for linear drives: p0315
See also: p0300, p0301, p0304, p0305, p0307, p0310, p0311, p0314, p0315, p0316, p0320, p0322, p0323

Remedy: Compare the motor data with the rating plate data and if required, correct.
See also: p0300, p0301, p0304, p0305, p0307, p0310, p0311, p0314, p0316, p0320, p0322, p0323

Reaction upon A: NONE

Acknowledge upon A: NONE

F07955 Drive: motor was changed

Reaction: NONE

Acknowledge: IMMEDIATELY

Cause: The code number of the actual motor with DRIVE-CLiQ does not match the saved number.
Fault value (r0949, decimal):
Number of the incorrect parameter.
See also: p0301, r0302

Remedy: Connect the original motor, power-up the Control Unit again (POWER ON) and exit the quick commissioning by setting p0010 to 0.
Or set p0300 = 10000 (load the motor parameter with DRIVE-CLiQ) and re-commission.
Quick commissioning (p0010 = 1) is automatically exited with p3900 > 0.
If quick commissioning was exited by setting p0010 to 0, then an automatic controller calculation (p0340 = 1) is not carried-out.

© Siemens AG, 2005. All rights reserved

F07956 Drive: Motor code does not match the list (catalog) motor

Reaction: NONE

Acknowledge: IMMEDIATELY

Cause: The motor code of the actual motor with DRIVE-CLiQ does not match the possible list motor types (refer to the selection, p0300).
Fault value (r0949, decimal):
Motor code of the motor with DRIVE-CLiQ

Remedy: Use a motor with DRIVE-CLiQ and the matching motor code.
The first three digits of the motor code generally correspond to the matching list motor type.

A07960 Drive: Friction characteristic incorrect

Reaction: NONE

Acknowledge: NONE

Cause: The friction characteristic is incorrect.
Alarm value (r2124, decimal):
1538: The friction torque is greater than the maximum from the upper effective torque limit (p1538) and zero. This is the reason that the friction characteristic output (p3841) is limited to this value.
1539: The friction torque is less than the minimum from the lower effective torque limit (p1539) and zero. This is the reason that the friction characteristic output (p3841) is limited to this value.
3820 - 3839: Incorrect parameter number, if
the speeds entered in the parameters for the friction characteristic do not correspond to the following condition:
0.0 < p3820 < p3821 < ... < p3829 <= p0322 or p1082, if p0322 = 0
or
the torques entered in the parameters for the friction characteristic do not correspond to the following condition:
0 <= p3830, p3831 ... p3839 <= p0333.
Therefore the friction characteristic output (p3841) is set to zero.
See also: r3840

Remedy: Fulfill the conditions for the friction characteristic.
Re alarm value = 1538:
Check the upper effective torque limit, e.g. in the field weakening range.
Re alarm value = 1539:
Check the lower effective torque limit, e.g. in the field weakening range.
Re alarm value = 3820 - 3839:
Fulfill the conditions to set the parameters of the friction characteristic.

A07961 Drive: Friction characteristic plot activated

Reaction: NONE

Acknowledge: NONE

Cause: The automatic friction characteristic plot is activated.
The friction characteristic is plotted at the next power-on command.

Remedy: None necessary.
The alarm disappears automatically after the friction characteristic plot has been successfully completed or the plot is de-activated (p3845 = 0).

© Siemens AG, 2005. All rights reserved

F07963 Drive: Friction characteristic plot aborted

Reaction: OFF1

Acknowledge: IMMEDIATELY

Cause: The condition to plot the friction characteristic are not fulfilled.
Fault value (r0949, decimal):
0046: Missing enable signals (r0046).
0840: OFF1 (p0840) is selected before the friction characteristic has been completely plotted.
1082: The highest speed value to be approached (p3829) is greater than the maximum speed (p1082).
1110: Friction characteristic plot, negative direction of rotation has be selected (p3845) and the negative direction of rotation is inhibited (p1110).
1111: Friction characteristic plot, positive direction of rotation has be selected (p3845) and the positive direction of rotation is inhibited (p1111).
1198: Friction characteristic plot selected (p3845 > 0) and the negative direction of rotation (p1110) and positive (p1111) are inhibited (r1198).
1300: The control mode (p1300) has not been set to closed-loop speed control.
1755: For sensorless closed-loop control (p1300 = 20), the lowest speed value to be approached (p3820) is less than or equal to the changeover speed, open-loop controlled operation (p1755).
1910: Motor data identification activated.
1960: Speed controller optimization activated.
3820 - 3829: Speed (p382x) cannot be approached.
3840: Friction characteristic incorrect.
3845: Friction characteristic plot de-selected.

Remedy: Fulfill the conditions to plot the friction characteristic.
Re fault value = 0046:
Establish missing enable signals.
Re fault value = 0840:
Select OFF1 (p0840) only after the friction characteristic plot has been completed.
Re fault value = 1082:
Select the highest speed value to be approached (p3829) less than or equal to the maximum speed (p1082).
Re fault value = 1110:
Select the frequency characteristic plot, positive direction of rotation (p3845).
Re fault value = 1111:
Select the frequency characteristic plot, negative direction of rotation (p3845).
Re fault value = 1198:
Enable the permitted direction of rotation (p1110, p1111, r1198).
Re fault value = 1300:
Set the control mode (p1300) on the closed-loop speed control (p1300 = 20, 21).
Re fault value = 1755:
For sensorless closed-loop speed control (p1300 = 20) select the lowest speed value to be approached (p3820) greater than the changeover speed of open-loop controlled operation (p1755).
Re fault value = 1910:
Exit the motor data identification routine (p1910).
Re fault value = 1960:
Exist the speed controller optimization routine (p1960).
Re fault value 3820 - 3829:
- check the load at speed p382x.
- check the speed signal (r0063) for oscillation at speed p382x. If required, check the speed controller settings.
Re fault value = 3840:
Make the friction characteristic error-free (p3820 - p3829, p3830 - p3839, p3840).
Re fault value = 3845:
Activate the friction characteristic plot (p3845).

© Siemens AG, 2005. All rights reserved

F07966 Drive: Check the commutation angle

Reaction: OFF2 (NONE)

Acknowledge: IMMEDIATELY

Cause: The speed actual value was inverted and the associated angular commutation offset is not equal to zero and is therefore possibly incorrect.

Remedy: Angular commutation offset after the actual value inversion or determine it again (p1990=1).

F07967 Drive: Automatic encoder adjustment incorrect

Reaction: OFF2 (NONE, OFF1)

Acknowledge: IMMEDIATELY

Cause: A fault has occurred during the automatic encoder adjustment or the pole position identification.
Only for internal Siemens troubleshooting.

Remedy: Carry-out a POWER ON.

F07968 Drive: Lq-Ld measurement incorrect

Reaction: OFF2

Acknowledge: IMMEDIATELY

Cause: A fault has occurred during the Lq-Ld measurement.
Fault value (r0949, decimal):
10: Stage 1: The ratio between the measured current and zero current is too low.
12: Stage 1: The maximum current was exceeded.
15: Second harmonic too low.
16: Drive converter too small for the measuring technique.
17: Abort due to pulse inhibit.

Remedy: Re fault value = 10:
Increase the value for p0325.
Check whether the motor is correctly connected.
Replace the Motor Module involved.
Re fault value = 12:
Reduce the value for p0325.
Check whether motor data have been correctly entered.
Re fault value = 15:
Increase the value of p0325.
Re fault value = 16:
De-activate traversing/moving (p01909).
Re fault value = 17:
Repeat traversing.

© Siemens AG, 2005. All rights reserved

F07969 Drive: Pole position identification routine incorrect

Reaction: OFF2

Acknowledge: IMMEDIATELY

Cause: A fault has occurred during the pole position identification routine.
Fault value (r0949, decimal):
1: Current controller limited
2: Motor shaft locked.
3: Damping input limited.
4: Encoder speed signal not plausible.
10: Stage 1: The ratio between the measured current and zero current is too low.
11: Stage 2: The ratio between the measured current and zero current is too low.
12: Stage 1: The maximum current was exceeded.
13: Stage 2: The maximum current was exceeded.
14: Current difference or the determination of +d axis too low.
15: Second harmonic too low.
16: Drive converter too small for the measuring technique.
17: Abort due to pulse inhibit.

Remedy: Re fault value = 1:
Check whether the motor is correctly connected.
Check whether motor data have been correctly entered.
Replace the Motor Module involved.
Re fault value = 2:
Open the motor holding brake (p1215) and bring the motor into a no-load condition.
Re fault value = 3:
Check whether the speed actual value inversion is correct (p0410.0).
Check whether the motor is correctly connected.
Check whether motor data have been correctly entered.
Re fault value = 4:
Check whether the encoder pulse number (p0408) and gearbox factor (p0432, p0433) are correct.
Check whether the motor pole pair number is correct (p0314).
Re fault value = 10:
Increase the value for p0325.
Check whether the motor is correctly connected.
Replace the Motor Module involved.
Re fault value = 11:
Increase the value for p0329.
Check whether the motor is correctly connected.
Replace the Motor Module involved.
Re fault value = 12:
Reduce the value for p0325.
Check whether motor data have been correctly entered.
Re fault value = 13:
Reduce the value for p0329.
Check whether motor data have been correctly entered.
Re fault value = 14:
Increase the value for p0329.
Re fault value = 15:
Increase the value for p0325.
Re fault value = 16:
De-activate traversing/moving (p1982).
Re fault value = 17:
Repeat traversing.

© Siemens AG, 2005. All rights reserved

F07970 Drive: Automatic encoder adjustment incorrect

Reaction: OFF2

Acknowledge: IMMEDIATELY

Cause: A fault has occurred during the automatic encoder adjustment.
Fault value (r0949, decimal):
1: Current controller limited
2: Motor shaft locked.
3: Damping input limited.
4: Encoder speed signal not plausible.
10: Stage 1: The ratio between the measured current and zero current is too low.
11: Stage 2: The ratio between the measured current and zero current is too low.
12: Stage 1: The maximum current was exceeded.
13: Stage 2: The maximum current was exceeded.
14: Current difference or the determination of +d axis too low.
15: Second harmonic too low.
16: Drive converter too small for the measuring technique.
17: Abort due to pulse inhibit.

Remedy: Re fault value = 1:
Check whether the motor is correctly connected.
Check whether motor data have been correctly entered.
Replace the Motor Module involved.
Re fault value = 2:
Open the motor holding brake (p1215) and bring the motor into a no-load condition.
Re fault value = 3:
Check whether the speed actual value inversion is correct (p0410.0).
Check whether the motor is correctly connected.
Check whether motor data have been correctly entered.
Re fault value = 4:
Check whether the speed actual value inversion is correct (p0410.0).
Check whether the motor is correctly connected.
Check whether the encoder pulse number (p0408) and gearbox factor (p0432, p0433) are correct.
Check whether the motor pole pair number is correct (p0314).
Re fault value = 10:
Increase the value for p0325.
Check whether the motor is correctly connected.
Replace the Motor Module involved.
Re fault value = 11:
Increase the value for p0329.
Check whether the motor is correctly connected.
Replace the Motor Module involved.
Re fault value = 12:
Reduce the value for p0325.
Check whether motor data have been correctly entered.
Re fault value = 13:
Reduce the value for p0329.
Check whether motor data have been correctly entered.
Re fault value = 14:
Increase the value for p0329.
Re fault value = 15:
Increase the value for p0325.
Re fault value = 16:
De-activate traversing/moving (p1982).
Re fault value = 17:
Repeat traversing.

© Siemens AG, 2005. All rights reserved

A07971 (N) Drive: Automatic encoder adjustment activated

Reaction: NONE

Acknowledge: NONE

Cause: The automatic encoder adjustment is activated (p1990 = 1).
The automatic encoder adjustment is carried-out with the next power-on command.
SERVO: If a pole position identification technique is selected in p1980, and if p0301 does not contain a motor type with an encoder adjusted in the factory, p1990 is automatically activated if fault 7414 is output.
See also: p1990

Remedy: None necessary.
The alarm automatically disappears after the encoder has been successfully adjusted or for the setting p1990 = 0.

Reaction upon N: NONE

Acknowledge upon N: NONE

A07980 Drive: Rotating measurement activated

Reaction: NONE

Acknowledge: NONE

Cause: The rotating measurement (automatic speed controller optimization) is activated.
The rotating measurement is carried-out at the next power-on command.
See also: p1960

Remedy: None necessary.
The alarm disappears automatically after the speed controller optimization has been successfully completed or for the setting p1900 = 0.

A07981 Drive: Enable signals for the rotating measurement missing

Reaction: NONE

Acknowledge: NONE

Cause: The rotating measurement cannot be started due to missing enable signals.

Remedy: - acknowledge faults that are present.
- establish missing enable signals.
See also: r0002, r0046

F07982 Drive: Rotating measurement, encoder test

Reaction: OFF1 (NONE, OFF2)

Acknowledge: IMMEDIATELY

Cause: A fault has occurred during the encoder test.
Alarm value (r2124, decimal):
1: The speed did not reach a steady-state condition.
2: The speed setpoint was not able to be approached as the minimum limiting is active.
3. The speed setpoint was not able to be approached as the suppression (skip) bandwidth is active.
4. The speed setpoint was not able to be approached as the maximum limiting is active.
5: The encoder does not supply a signal.
6: Incorrect polarity.
7: Incorrect pulse number.
8: Encoder signal faults.

© Siemens AG, 2005. All rights reserved

Remedy: Re alarm value = 1:
- check the motor parameters.
- carry-out a motor data identification routine (p1910).
- if required, reduce the dynamic factor (p1967 < 25 %).

Re alarm value = 2:
Adapt the speed setpoint (p1965) or minimum limiting (p1080).
Re alarm value = 3:
Adapt the speed setpoint (p1965) or suppression (skip) bandwidths (p1091 ... p1094, p1101).
Re alarm value = 4:
Adapt the speed setpoint (p1965) or maximum limiting (p1082, p1083 and p1086).
Re alarm value = 5:
Check the encoder connection. If required, replace the encoder.
Re alarm value = 6:
Check the connection assignment of the encoder cable. Adapt the polarity (p0410).
Re alarm value = 7:
Adapt the pulse number (p0408).
Re alarm value = 8:
Check the encoder connection and encoder cable. It is possible that there is a problem associated with the ground connection.
Note:
The encoder test can be switched-out (disabled) using p1959.0.
See also: p1959

F07983 Drive: Rotating measurement, saturation characteristic

Reaction: OFF1 (NONE, OFF2)

Acknowledge: IMMEDIATELY

Cause: A fault has occurred while determining the saturation characteristic.
Alarm value (r2124, decimal):
1: The speed did not reach a steady-state condition.
2: The rotor flux did not reach a steady-state condition.
3: The adaptation circuit did not reach a steady-state condition.
4: The adaptation circuit was not enabled.
5: Field weakening active.
6: The speed setpoint was not able to be approached as the minimum limiting is active.
7: The speed setpoint was not able to be approached as the suppression (skip) bandwidth is active.
8: The speed setpoint was not able to be approached as the maximum limiting is active.
9: Several values of the determined saturation characteristic are not plausible.
10: Saturation characteristic could not be sensibly determined because load torque too large.

Remedy: Re alarm value = 1 ... 4:
- check the motor parameters.
- carry-out a motor data identification routine (p1910).
- if required, reduce the dynamic factor (p1967 < 25 %).

Re alarm value = 5:
The speed setpoint (p1961) is too high. Reduce the speed.
Re alarm value = 6:
Adapt the speed setpoint (p1961) or minimum limiting (p1080).
Re alarm value = 7:
Adapt the speed setpoint (p1961) or suppression (skip) bandwidths (p1091 ... p1094, p1101).
Re alarm value = 8:
Adapt the speed setpoint (p1961) or maximum limiting (p1082, p1083 and p1086).
Re alarm value = 9, 10:
The measurement was carried-out at an operating point where the load torque is too high. Select a more suitable operating point, either by changing the speed setpoint (p1961) or by reducing the load torque. The load torque may not be varied while making measurements.
Note:
The saturation characteristic identification routine can be disabled using p1959.1.
See also: p1959

© Siemens AG, 2005. All rights reserved

F07984 Drive: Speed controller optimization, moment of inertia

Reaction: OFF1 (NONE, OFF2)

Acknowledge: IMMEDIATELY

Cause: A fault has occurred while identifying the moment of inertia.
Alarm value (r2124, decimal):
1: The speed did not reach a steady-state condition.
2: The speed setpoint was not able to be approached as the minimum limiting is active.
3. The speed setpoint was not able to be approached as the suppression (skip) bandwidth is active.
4. The speed setpoint was not able to be approached as the maximum limiting is active.
5: It is not possible to increase the speed by 10% as the minimum limiting is active.
6: It is not possible to increase the speed by 10% as the suppression (skip) bandwidth is active.
7: It is not possible to increase the speed by 10% as the maximum limiting is active.
8: The torque difference after the speed setpoint step is too low in order to be able to still reliably identify the moment of inertia.
9: Too few data to be able to reliably identify the moment of inertia.
10: After the setpoint step, the speed either changed too little or in the incorrect direction.
11: The identified moment of inertia is not plausible.

Remedy: Re alarm value = 1:
- check the motor parameters.
- carry-out a motor data identification routine (p1910).
- if required, reduce the dynamic factor (p1967 < 25 %).

Re alarm value = 2, 5:
Adapt the speed setpoint (p1965) or minimum limiting (p1080).
Re alarm value = 3, 6:
Adapt the speed setpoint (p1965) or suppression (skip) bandwidths (p1091 ... p1094, p1101).
Re alarm value = 4, 7:
Adapt the speed setpoint (p1965) or maximum limiting (p1082, p1083 and p1086).
Note:
The moment of inertia identification routine can be disabled using p1959.2.
See also: p1959

F07985 Drive: Speed controller optimization, (vibration test)

Reaction: OFF1 (NONE, OFF2)

Acknowledge: IMMEDIATELY

Cause: A fault has occurred during the vibration test.
Alarm value (r2124, decimal):
1: The speed did not reach a steady-state condition.
2: The speed setpoint was not able to be approached as the minimum limiting is active.
3. The speed setpoint was not able to be approached as the suppression (skip) bandwidth is active.
4. The speed setpoint was not able to be approached as the maximum limiting is active.
5: Torque limits too low for a torque step.
6: No suitable speed controller setting was found.

Remedy: Re alarm value = 1:
- check the motor parameters.
- carry-out a motor data identification routine (p1910).
- if required, reduce the dynamic factor (p1967 < 25 %).

Re alarm value = 2:
Adapt the speed setpoint (p1965) or minimum limiting (p1080).
Re alarm value = 3:
Adapt the speed setpoint (p1965) or suppression (skip) bandwidths (p1091 ... p1094, p1101).
Re alarm value = 4:
Adapt the speed setpoint (p1965) or maximum limiting (p1082, p1083 and p1086).
Re alarm value = 5:
Increase the torque limits (e.g. p1520, p1521).
Re alarm value = 6:
Reduce the dynamic factor (p1967).
Note:
The speed controller vibration test can be disabled using p1959.4.
See also: p1959

© Siemens AG, 2005. All rights reserved

F07986 **Drive: Rotating measurement, ramp-function generator**

Reaction: OFF1 (NONE, OFF2)

Acknowledge: IMMEDIATELY

Cause: During the rotating measurements, problems with the ramp-function generator occurred.
Fault value (r0949, decimal):
1: The positive and negative direction of rotation is inhibited.

Remedy: Re fault value = 1:
Enable the direction of rotation (p1110 or p1111).

A07987 **Drive: Rotating measurement, no encoder available**

Reaction: NONE

Acknowledge: NONE

Cause: No encoder available. The rotating measurement was carried-out without encoder (sensorless).
Alarm value (r2124, decimal):
1: An encoder is not connected.
2: It involves a SINAMICS G drive unit that only supports sensorless closed-loop control.

Remedy: Re alarm value = 1:
Connect-up the encoder.
Re alarm value = 2:
None necessary.

F07988 **Drive: Rotating measurement, no configuration selected**

Reaction: OFF2 (NONE, OFF1)

Acknowledge: IMMEDIATELY

Cause: When configuring the rotating measurement (p1959), no function was selected.

Remedy: Select at least one function for automatic optimization of the speed controller (p1959).
See also: p1959

F07990 **Drive: Incorrect motor data identification**

Reaction: OFF2 (NONE, OFF1)

Acknowledge: IMMEDIATELY

Cause: A fault has occurred during the identification routine.
Fault value (r0949, decimal):
1: Current limit value reached.
2: Identified stator resistance lies outside the expected range 0.1 ... 100 % of Zn.
3: Identified rotor resistance lies outside the expected range 0.1 ... 100 % of Zn.
4: Identified stator reactance lies outside the expected range 50 ... 500 % of Zn.
5: Identified magnetizing reactance lies outside the expected range 50 ... 500 % of Zn.
6: Identified rotor time constant lies outside the expected range 10 ms ... 5 s.
7: Identified total leakage reactance lies outside the expected range 4 ... 50 % of Zn.
8: Identified stator leakage reactance lies outside the expected range 2 ... 50 % of Zn.
9: Identified rotor leakage reactance lies outside the expected range 2 ... 50 % of Zn.
10: Motor has been incorrectly connected.
11: Motor shaft rotates.
20: Identified threshold voltage of the semiconductor devices lies outside the expected range 0 ... 10 V.
30: Current controller in voltage limiting.
40: At least one identification contains errors. The identified parameters are not saved to prevent inconsistencies.
50: With the selected current controller sampling rate, the pulse frequency cannot be implemented.
Note:
Percentage values are referred to the rated motor impedance:
Zn = Vmot.nom / sqrt(3) / Imot,nom
101: Voltage amplitude even at 30% maximum current amplitude is too low to measure the inductance.
102, 104: Voltage limiting while measuring the inductance.
103: Maximum frequency exceeded during the rotating inductance measurement.
110: Motor not finely synchronized before the rotating measurement.
173: Internal problem.
180: Identification speed (maximum speed, rated speed, 0.9*p0348) less than p1755.
190: Speed setpoint not equal to zero.
191: Zero speed not reached.

© Siemens AG, 2005. All rights reserved

Remedy: Re fault value = 0:
Check whether the motor is correctly connected. Observe the configuration (star-delta).
Re fault value = 1 ... 40:
- check whether the motor data have been correctly entered into p0300, p0304 - p0311.
- is there an appropriate relationship between the motor power rating and that of the Motor Module? The ratio of the Motor Module to the rated motor current should not be less than 0.5 and should not be greater than 4.
- check the motor configuration (star-delta).
Re fault value = 4, 7:
Check whether inductances are correctly entered in p0233 and p0353.
Re fault value = 50:
Reduce the current controller sampling rate.
Re fault value = 101:
Increase current limit (p0640)
Reduce the current controller sampling time (p0115).
It may be impossible to completely identify the L characteristic, as the required current amplitude is too high.
Suppress measurement (p1909, p1959)
Re fault value = 102, 104:
Reduce the current limit (p0640).
Check the current controller P gain.
Suppress measurement (p1909, p1959)
Re fault value = 103:
Increase the external moment of inertia (if possible).
Reduce the current controller sampling time (p0115).
Suppress measurement (p1909, p1959)
Re fault value 110:
Traverse the motor over the zero mark
Re fault value 173:
-
Re fault value 180:
Increase the maximum speed (p1082).
Reduce p1755.
Suppress measurement (p1909, p1959)
Re fault value 190:
Set the speed setpoint to zero.
Re fault value 191:
?

A07991 (N) Drive: Motor data identification activated

Reaction: NONE

Acknowledge: NONE

Cause: The motor data identification routine is activated.
The motor data identification routine is carried-out at the next power-on command.
See also: p1910

Remedy: None necessary.
The alarm automatically disappears after the motor data identification routine has been successfully completed or for the setting p1900 = 0.

Reaction upon N: NONE

Acknowledge upon N: NONE

© Siemens AG, 2005. All rights reserved

F07995 Drive: Pole position identification routine not successful

Reaction: OFF2

Acknowledge: IMMEDIATELY

Cause: The pole position identification routine was unsuccessful.
Fault value (r0949, decimal):
1: No current is established.
2: The starting current is not zero.
3: The selected maximum distance was exceeded (p1981).
4x: The measuring signal does not permit a clear evaluation.
5: The maximum current was exceeded during the measurement.
6: The current measurement must be re-calibrated.
7x: The Sensor Module does not support the pole position identification routine.
70 ... 79: Only for internal Siemens troubleshooting.
8: The pole position identification routine current required is greater than the maximum current.
9: The set pole position identification routine current is zero.
100: Motion-based pole position identification, 1st and 2nd measurement different. Motor locked or current (p1993) too low.
101: Motion-based position position identification, insufficient motion, motor locked or current (p1993) too low.
102: Motion-based pole position identification, brake is being used and is closed. The motion-based position position identification in conjunction with the brake is not permitted.
Note: x = 0 ... 9

Remedy: Re fault value = 1:
Check the motor connection and DC link voltage.
For the following parameters, set practical values that are not zero (p0325, p0329).
Re fault value = 3:
Increase the maximum distance (p1981).
Reduce the currents for the pole position identification routine (p0325, p0329).
Stop the motor in order to carry-out the pole position identification routine.
Re fault value = 40 ... 49:
Increase the currents for the pole position identification routine (p0325, p0329).
Stop the motor in order to carry-out the pole position identification routine.
Select another technique for pole position identification routine (p1980).
Use another motor, absolute value encoder or Hall sensors.
Re fault value = 5:
Reduce the currents for the pole position identification routine (p0325, p0329).
Re fault value = 6:
Re-calibrate the Motor Module.
Re fault value = 7x:
Upgrade the software in the Sensor Module.
Re fault value = 8:
Reduce the currents for the pole position identification routine (p0329, p0325, p1993).
The power module cannot provide the necessary pole position identification routine current (p0209 < p0329, p0325, p1993), replace the power module by a power module with a higher maximum current.
Re fault value = 9:
Enter a value not equal to zero in the pole position identification routine current (p0329, p0325, p1993).
Re fault value = 100, 101:
Check and ensure that the motor is free to move.
Increase the current for motion-based pole position identification (p1993).
Re fault value = 102:
If the motor with brake is to be operated: Select a different technique for pole position identification (p1980).
If the motor can be operated without brake: Open brake (p1215 = 2).

© Siemens AG, 2005. All rights reserved

F07996 Drive: Pole position identification routine not carried-out

Reaction: ENCODER (OFF2)

Acknowledge: IMMEDIATELY

Cause: The drive was changed over, flying, from sensorless operation to operation with encoder without having previously carried-out a pole position identification for the encoder. p1404 is then at a value between zero and the maximum speed and the pulses in the speed range above p1404 were enabled without a pole position identification routine having been previously carried-out in operation with encoder.

Remedy: For a flying changeover between operation with and without encoder with pole position identification after POWER ON or commissioning (p0010 not equal to zero) enable the pulses once at zero speed. This means that the pole position identification routine is carried-out and the result is available for operation.

F08000 (N, A) TB: +/-15 V power supply faulted

Reaction: NONE (DCBRAKE, OFF1, OFF2, OFF3, STOP1, STOP2)

Acknowledge: IMMEDIATELY (POWER ON)

Cause: Terminal Board 30 detects an incorrect internal power supply voltage.
Fault value (r0949, decimal):
0: Error when testing the monitoring circuit.
1: Fault in normal operation.

Remedy: - replace Terminal Board 30.
- replace Control Unit.

Reaction upon N: NONE

Acknowledge upon N: NONE

Reaction upon A: NONE

Acknowledge upon A: NONE

F08010 (N, A) TB: Analog-digital converter

Reaction: A_INFEED: NONE (DCBRAKE, OFF1, OFF2, OFF3, STOP1, STOP2)
SERVO: NONE (DCBRAKE, OFF1, OFF2, OFF3, STOP1, STOP2)
VECTOR: OFF1 (DCBRAKE, NONE, OFF2, OFF3, STOP1, STOP2)

Acknowledge: IMMEDIATELY (POWER ON)

Cause: The analog/digital converter on Terminal Board 30 has not supplied any converted data.

Remedy: - check the power supply.
- replace Terminal Board 30.

Reaction upon N: NONE

Acknowledge upon N: NONE

Reaction upon A: NONE

Acknowledge upon A: NONE

F08500 (A) COMM BOARD: Monitoring time, configuration expired

Reaction: OFF1 (OFF2, OFF3)

Acknowledge: IMMEDIATELY

Cause: The monitoring time for the configuration has expired.
Fault value (r0949, decimal):
0: The transfer of the send-configuration data has been exceeded (time).
1: The transfer of the receive-configuration data has been exceeded (time).

Remedy: Check communication line.

Reaction upon A: NONE

Acknowledge upon A: NONE

© Siemens AG, 2005. All rights reserved

F08501 (A) COMM BOARD: Monitoring time, process data expired

Reaction: OFF1 (OFF2, OFF3)
Acknowledge: IMMEDIATELY
Cause: The set monitoring time expired while transferring process data via COMM BOARD.
Remedy: - check communications link.
- check the set monitoring time if the error persists.
Reaction upon A: NONE
Acknowledge upon A: NONE

F08502 (A) COMM BOARD: Monitoring time, sign-of-life expired

Reaction: OFF1 (OFF2, OFF3)
Acknowledge: IMMEDIATELY
Cause: The monitoring time for the sign-of-life counter has expired.
Remedy: Check communication line.
Reaction upon A: NONE
Acknowledge upon A: NONE

A08504 (F) COMM BOARD: Internal cyclic data transfer error

Reaction: NONE
Acknowledge: NONE
Cause: The cyclic actual and/or setpoint values were not transferred within the specified times.
Alarm value (r2124, decimal):
Only for internal Siemens troubleshooting.
Remedy: Check the parameterizing telegram (Ti, To, Tdp, etc.).
Reaction upon F: NONE (OFF1, OFF2, OFF3)
Acknowledge upon F: IMMEDIATELY

F08510 (A) COMM BOARD: send configuration data not valid.

Reaction: OFF1 (OFF2, OFF3)
Acknowledge: IMMEDIATELY
Cause: COMM BOARD did not accept the send-configuration data.
Fault value (r0949, decimal):
Return value of the send-configuration data check.
Remedy: Check the send configuration data.
Reaction upon A: NONE
Acknowledge upon A: NONE

© Siemens AG, 2005. All rights reserved

A08511 (F) COMM BOARD: Receive configuration data not valid

Reaction: NONE

Acknowledge: NONE

Cause: The drive unit did not accept the receive-configuration data.
Alarm value (r2124, decimal):
Return value of the receive-configuration data check.
0: Configuration accepted.
1: Connection established to more drive objects than configured in the device. The drive objects for process data exchange and their sequence was defined using p0978.
2: Too many data words for input or output to a drive object. A max. of 16 words is permitted for SERVO and VECTOR; max. 5 words, for A_INFEED, TB30, TM31 and CU320.
3: Uneven number of bytes for input or output.
4: Setting data for synchronization not accepted.
5: Drive still not in cyclic operation.
6: Buffer system not accepted.
7: Cyclic channel length too short for this setting.
8: Cyclic channel address not initialized.
9: 3-buffer system not permitted.
10: DRIVE-CLiQ fault.
11: CU link fault.
12: CX32 not in cyclic operation.

Remedy: Check the receive configuration data.
Re alarm value = 1:
Check the list of the drive objects with process data exchange (p0978). With p0978[x] = 0, all of the following drive objects in the list are excluded from the process data exchange.

Reaction upon F: NONE (OFF1, OFF2, OFF3)

Acknowledge upon F: IMMEDIATELY

A08520 (F) COMM BOARD: Non-cyclic channel error

Reaction: NONE

Acknowledge: NONE

Cause: The memory or the buffer status of the non-cyclic channel has an error.
Alarm value (r2124, decimal):
0: Error in the buffer status.
1: Error in the memory.

Remedy: Check communication line.

Reaction upon F: NONE (OFF1, OFF2, OFF3)

Acknowledge upon F: IMMEDIATELY

A08530 (F) COMM BOARD: Message channel error

Reaction: NONE

Acknowledge: NONE

Cause: The memory or the buffer status of the message channel has an error.
Alarm value (r2124, decimal):
0: Error in the buffer status.
1: Error in the memory.

Remedy: Check communication line.

Reaction upon F: NONE (OFF1, OFF2, OFF3)

Acknowledge upon F: IMMEDIATELY

© Siemens AG, 2005. All rights reserved

F08700 (A) CBC: Communications error

Reaction: OFF3 (NONE, OFF1, OFF2)

Acknowledge: IMMEDIATELY

Cause: A CAN communications error has occurred.
Fault value (r0949, decimal):
1: The error counter for the send telegrams has exceeded the BUS OFF value 255. The bus disables the CAN controller.
- bus cable interrupted.
- bus cable not connected.
- incorrect baud rate.
- incorrect bit timing.

2: The master no longer interrogated the CAN node status longer than for its "life time". The "life time" is obtained from the "guard time" (p8604[0]) multiplied by the "life time factor" (p8604[1]).
- bus cable interrupted.
- bus cable not connected.
- incorrect baud rate.
- incorrect bit timing.
- master fault.

Note:
The fault response can be set as required using p8641.
See also: p8604, p8641

Remedy:
- check the bus cable
- check the baud rate (p8622).
- check the bit timing (p8623).
- check the master.

See also: p8622, p8623

Reaction upon A: NONE

Acknowledge upon A: NONE

F08701 CBC: NMT state change

Reaction: A_INFEED: OFF2
SERVO: OFF3
VECTOR: OFF3

Acknowledge: IMMEDIATELY

Cause: A CANopen NMT state transition from "operational" to "pre-operational" or after "stopped".
Fault value (r0949, decimal):
1: CANopen NMT state transition from "operational" to "pre-operational".
2: CANopen NMT state transition from "operational" to "stopped".
Note:
In the NMT state "pre-operational", process data cannot be transferred and in the NMT state "stopped", no process data and no service data can be transferred.

Remedy: None necessary.
Acknowledge the fault and continue operation.

A08751 CBC: Telegram loss

Reaction: NONE

Acknowledge: NONE

Cause: The CAN controller has lost a receive message (telegram).

Remedy: Reduce the cycle times of the receive messages.

A08752 CBC: Error counter for error passive exceeded

Reaction: NONE

Acknowledge: NONE

Cause: The error counter for the send or receive telegrams has exceeded the value 127.

Remedy:
- check the bus cable
- set a higher baud rate (p8622).
- check the bit timing and if required optimize (p8623).

See also: p8622, p8623

© Siemens AG, 2005. All rights reserved

A08753 CBC: Message buffer overflow

Reaction: NONE

Acknowledge: NONE

Cause: A message buffer overflow.
Alarm value (r2124, decimal):
1: Non-cyclic send buffer (SDO response buffer) overflow.
2: Non-cyclic receive buffer (SDO receive buffer) overflow.
3: Cyclic send buffer (PDO send buffer) overflow.

Remedy: Check the bus cable.
Set a higher baud rate (p8622).
Check the bit timing and if required optimize (p8623).
Re alarm value = 2:
- reduce the cycle times of the SDO receive messages.
See also: p8622, p8623

A08754 CBC: Incorrect communications mode

Reaction: NONE

Acknowledge: NONE

Cause: In the "operational" mode, an attempt was made to change parameters p8700 ... p8737.

Remedy: Change into the "pre-operational" or "stopped" mode.

A08755 CBC: Obj cannot be mapped

Reaction: NONE

Acknowledge: NONE

Cause: The CANopen object is not provided for the Process Data Object (PDO) Mapping.

Remedy: Use a CANopen object intended for the PDO mapping or enter 0.
The following objects can be mapped in the Receive Process Data Object (RPDO) or Transmit Process Data Object (TPDO):
- RPDO: 6040 hex, 6060 hex, 60FF hex, 6071 hex.
- TPDO: 6041 hex, 6061 hex, 6063 hex, 6069 hex, 606B hex, 606C hex, 6074 hex.
Note:
As long as A08755 is present, the COB-ID cannot be set to valid.

A08756 CBC: Number of mapped bytes exceeded

Reaction: NONE

Acknowledge: NONE

Cause: The number of bytes of the mapped objects exceeds the telegram size for net data. A maximum of 8 bytes is permissible.

Remedy: Map fewer objects or objects with a smaller data type.
See also: p8710, p8711, p8712, p8713, p8714, p8715, p8716, p8717, p8730, p8731, p8732, p8733, p8734, p8735, p8736, p8737

A08757 CBC: Set COB-ID invalid

Reaction: NONE

Acknowledge: NONE

Cause: For online operation, the appropriate COB-ID must be set invalid before mapping.
Example:
Mapping for RPDO 1 should be changed (p8710[0]).
--> set p8700[0] = C00006E0 hex (invalid COB-ID)
--> set p8710[0] as required.
--> p8700[0] enter a valid COB-ID

Remedy: Set the COB-ID to invalid.

© Siemens AG, 2005. All rights reserved

A08758 CBC: Number of PDO channels too low

Reaction: NONE

Acknowledge: NONE

Cause: The number of PDO channels in p8740 has either been set to 0 or too low.
See also: p8740

Remedy: The number of channels set in p8740 must be greater than or equal to the number of PDOs.
There are 2 possibilities:
Increase the number of channels in p8740 and confirm the selection using p8741.
Reduce the number of PDOs by setting the COB-ID to invalid.
See also: p8740, p8741

A08759 CBC: PDO COB-ID already available

Reaction: NONE

Acknowledge: NONE

Cause: An existing PDO COB-ID was allocated.

Remedy: Select another PDO COB-ID.

A13000 License not adequate

Reaction: NONE

Acknowledge: NONE

Cause: - for the drive unit, the options that require a license are being used but the licenses are not sufficient.
- an error occurred when checking the existing licenses.
Alarm value (r2124, decimal):
0:
The existing license is not sufficient.
1:
An adequate license was not able to be determined as the CompactFlash card with the required licensing data was withdrawn in operation.
2:
An adequate license was not able to be determined, as an error occurred when reading-out the required licensing data from the CompactFlash card.
3:
An adequate license was not able to be determined as there is a checksum error in the license key.
4:
An internal error occurred when checking the license.

Remedy: Alarm value 0:
Additional licenses are required and these must be activated (p9920, p9921).
Alarm value 1:
With the system powered-down, re-insert the CompactFlash card that matches the system.
Alarm value 2:
Enter and activate the license key (p9920, p9921).
Alarm value 3:
Compare the license key (p9920) entered with the license key on the certificate of license.
Re-enter the license key and activate (p9920, p9921).
Alarm value 4:
- carry-out a POWER ON.
- upgrade the firmware release.
- contact the Hotline.

A13001 Error in license checksum

Reaction: NONE

Acknowledge: NONE

Cause: When checking the checksum of the license key, an error was detected.

Remedy: Compare the license key (p9920) entered with the license key on the certificate of license.
Re-enter the license key and activate (p9920, p9921).

© Siemens AG, 2005. All rights reserved

F30001 Power module: Overcurrent

Reaction: OFF2

Acknowledge: IMMEDIATELY

Cause: The power module has detected an overcurrent condition.
- closed-loop control is incorrectly parameterized.
- motor has a short-circuit or fault to ground (frame).
- V/f operation: Up ramp set too short.
- V/f operation: Rated motor current is significantly greater than that of the Motor Module.
- infeed: High discharge and post-charging current for line supply voltage interruptions.
- infeed: High post-charging currents for overload when motoring and DC link voltage dip.
- infeed: Short-circuit currents at power-on due to the missing commutating reactor.
- power cables are not correctly connected.
- power cables exceed the maximum permissible length.
- power module defective.

Fault value (r0949):
Bit 0: Phase U.
Bit 1: Phase V.
Bit 2: Phase W.

Remedy:
- check the motor data - if required, carry-out commissioning.
- check the motor circuit configuration (star-delta).
- V/f operation: Increase the up ramp.
- V/f operation: Check the assignment of the rated currents of the motor and Motor Module.
- infeed: Check the line supply quality.
- infeed: Reduce the load when motoring.
- infeed: Correct connection of the line commutating reactor.
- check the power cable connections.
- check the power cables for short-circuit or ground fault.
- check the length of the power cables.
- replace power module.

F30002 Power module: DC link overvoltage

Reaction: OFF2

Acknowledge: IMMEDIATELY

Cause: The power module has detected an overvoltage condition in the DC link.
- motor regenerates too much energy.
- line supply voltage too high.

Fault value (r0949, decimal):
DC link voltage [1 bit = 100 mV].
For SINAMICS GM/SM, the following applies:
Fault value (r0949, decimal):
64: Overvoltage in the negative partial DC link (VdcP)
128: Overvoltage in the positive partial DC link (VdcN)
192: Overvoltage in both partial -DC links

Remedy:
- increase the ramp-down time.
- activate the DC link voltage controller.
- use a brake resistor or Active Line Module.
- increase the current limit of the infeed or use a larger module (for the Active Line Module).
- check the line supply voltage.

See also: p0210, p1240

© Siemens AG, 2005. All rights reserved

F30003 Power module: DC link undervoltage

Reaction: OFF2

Acknowledge: IMMEDIATELY

Cause: The power module has detected an undervoltage condition in the DC link.
- line supply failure
- line supply voltage below the permissible value.
- line supply infeed failed or faulted.

Note:
The monitoring threshold for the DC link undervoltage is the minimum of the following values:
- 85% of the unit supply voltage (p0210).
- lowest permissible lower DC link voltage of the power modules (descriptive data).

Remedy:
- check the line supply voltage
- check the line supply infeed and if necessary observe the fault messages of the line supply infeed.

Note:
The ready signal of the infeed r0863 must be connected to the associated inputs p0864 of the drives.
See also: p0210

F30004 Power module: Overtemperature heatsink AC inverter

Reaction: OFF2

Acknowledge: IMMEDIATELY

Cause: The temperature of the power module heatsink has exceeded the permissible limit value.
- insufficient cooling, fan failure.
- overload
- ambient temperature too high.
- pulse frequency too high.

Fault value (r0949):
Temperature [1 bit = 0.01 °C].

Remedy:
- check whether the fan is running.
- check the fan elements
- check whether the ambient temperature is in the permissible range.
- check the motor load.
- reduce the pulse frequency if this is higher than the rated pulse frequency.

Notice:
This fault can only be acknowledged after this alarm threshold for alarm A05000 has been fallen below.
See also: p1800

F30005 Power module: Overload I2T

Reaction: OFF2

Acknowledge: IMMEDIATELY

Cause: The power module was overloaded (r0036 = 100 %).
- the permissible rated power module current was exceeded for an inadmissibly long time.
- the permissible load duty cycle was not maintained.

Fault value (r0949, decimal):
I2t [100 % = 16384].

Remedy:
- reduce the continuous load.
- adapt the load duty cycle.
- check the motor and power module rated currents.

See also: r0036, r0206, p0307

© Siemens AG, 2005. All rights reserved

F30006 Power module: Thyristor control board

Reaction: OFF2

Acknowledge: IMMEDIATELY

Cause: The thyristor control board of the Basic Line Module signals a fault.
- there is not line supply voltage.
- the line contactor is not closed.
- the line supply voltage is too low.
- line supply frequency outside the permissible range (45 ... 66 Hz).
- there is a DC link short-circuit.
- there is a DC link short-circuit (during the pre-charging phase).
- power supply thyristor control board outside the nominal range (5 ... 18 V) and supply voltage >30 V.
- there is an internal fault in the thyristor control board.

Remedy: The faults are saved in the TCB and are acknowledged by switching-out the TCB supply voltage for at least 10 s!
- check the line supply voltage
- check or energize the line contactor.
- check the monitoring time and, if required, increase (p0857).
- if required, observe additional power module messages/signals.
- check the DC link regarding short-circuit or ground fault.
- observe the LED fault display of the thyristor control board.

A30010 (F) Power module: Sign-of-life, cyclic data

Reaction: NONE

Acknowledge: NONE

Cause: A DRIVE-CLiQ communications error has occurred between the Control Unit and the power module involved.
The cyclic setpoint telegrams of the Control Unit were not received on time by the power module for at least one clock cycle.

Remedy: - check the electrical cabinet design and cable routing for EMC compliance

Reaction upon F: NONE (OFF1, OFF2, OFF3)

Acknowledge upon F: IMMEDIATELY (POWER ON)

F30011 Power module: Line phase failure in main circuit

Reaction: OFF2 (OFF1)

Acknowledge: IMMEDIATELY

Cause: A line phase failure was detected at the power module.
- the fuse of a phase of a main circuit has ruptured.
- the DC link voltage ripple has exceeded the permissible limit value.

Remedy: Check the fuses in the main circuit.

F30012 Power module: Temperature sensor heatsink wire breakage

Reaction: OFF1 (OFF2)

Acknowledge: IMMEDIATELY

Cause: The connection to one of the heatsink temperature sensors in the power module is interrupted.
Fault value (r0949, hexadecimal):
Bit 0: Module slot (electronics slot)
Bit 1: Air intake
Bit 2: Inverter 1
Bit 3: Inverter 2
Bit 4: Inverter 3
Bit 5: Inverter 4
Bit 6: Inverter 5
Bit 7: Inverter 6
Bit 8: Rectifier 1
Bit 9: Rectifier 2
See also: r0949

Remedy: Contact the manufacturer.

© Siemens AG, 2005. All rights reserved

F30013 Power module: Temperature sensor heatsink short-circuit

Reaction: OFF1 (OFF2)

Acknowledge: IMMEDIATELY

Cause: The heatsink temperature sensor in the Motor Module is short-circuited.
Fault value (r0949, hexadecimal):
Bit 0: Module slot (electronics slot)
Bit 1: Air intake
Bit 2: Inverter 1
Bit 3: Inverter 2
Bit 4: Inverter 3
Bit 5: Inverter 4
Bit 6: Inverter 5
Bit 7: Inverter 6
Bit 8: Rectifier 1
Bit 9: Rectifier 2

Remedy: Contact the manufacturer.

F30017 Power module: Hardware current limit has responded too often

Reaction: OFF2

Acknowledge: IMMEDIATELY

Cause: The hardware current limitation in the relevant phase (see A30031, A30032, A30033) has responded too often. The number of times the limit has been exceeded depends on the design and type of power module.
For infeed units, the following applies:
- closed-loop control is incorrectly parameterized.
- load on the infeed is too high.
- Voltage Sensing Module incorrectly connected.
- commutating reactor missing or the incorrect type.
- power module defective.

The following applies to Motor Modules:
- closed-loop control is incorrectly parameterized.
- fault in the motor or in the power cables.
- the power cables exceed the maximum permissible length.
- motor load too high
- power module defective.

Fault value (r0949, binary):
Bit 0: Phase U
Bit 1: Phase V
Bit 2: Phase W

Remedy: For infeed units, the following applies:
- check the controller settings, if required, reset and identify the controller (p0340 = 2, p3410 = 5).
- reduce the load, if required, increase the DC link capacitance or use a higher-rating infeed.
- check the connection of the optional Voltage Sensing Module.
- check the connection and technical data of the commutating reactor.
- check the power cables for short-circuit or ground fault.
- replace power module.

The following applies to Motor Modules:
- check the motor data.
- check the motor circuit configuration (star-delta).
- check the motor load.
- check the power cable connections.
- check the power cables for short-circuit or ground fault.
- check the length of the power cables.
- replace power module.

© Siemens AG, 2005. All rights reserved

F30021 Power module: Ground fault

Reaction: OFF2

Acknowledge: IMMEDIATELY

Cause: Power module has detected a ground fault.
- ground fault in the power cables
- winding fault or ground fault at the motor.
- CT defective.

Fault value (r0949, decimal):
Absolute value, summed current [32767 = 271 % rated current].

Remedy:
- check the power cable connections.
- check the motor.
- check the CT.

See also: p0287

F30022 Power module: Monitoring U_ce

Reaction: OFF2

Acknowledge: POWER ON

Cause: In the power module, the monitoring of the collector-emitter voltage (V_ce) of the semiconductor has responded.
Possible causes:
- short-circuit at the Motor Module output.
- defective semiconductor in the power module.

Fault value (r0949, binary):
Bit 0: Short-circuit in phase U
Bit 1: Short-circuit in phase V
Bit 2: Short-circuit in phase W
Bit 3: Light transmitter enable defective
Bit 4: V_ce group fault signal interrupted
See also: r0949

Remedy:
- check the power cable connections.
- select the defective semiconductor and replace.

F30025 Power module: Overtemperature chip

Reaction: OFF2

Acknowledge: IMMEDIATELY

Cause: Chip temperature of the semiconductor has exceeded the permissible limit value.
- the permissible load duty cycle was not maintained.
- insufficient cooling, fan failure.
- overload
- ambient temperature too high.
- pulse frequency too high.

Fault value (r0949):
Temperature difference between the heatsink and chip [1 Bit = 0.01 °C].

Remedy:
- adapt the load duty cycle.
- check whether the fan is running.
- check the fan elements
- check whether the ambient temperature is in the permissible range.
- check the motor load.
- reduce the pulse frequency if this is higher than the rated pulse frequency.

Notice:
This fault can only be acknowledged after this alarm threshold for alarm A05001 has been fallen below.
See also: r0037

© Siemens AG, 2005. All rights reserved

F30027 Power module: Precharging DC link monitoring

Reaction: OFF2

Acknowledge: IMMEDIATELY

Cause: The power module DC link was not able to be pre-charged within the expected time.
- line supply voltage too low.
- line supply phase fault.
- short-circuit or ground fault in the DC link.
- pre-charging circuit defective.

Fault value (r0949):
Missing internal enable signals, power module (lower 16 bit):
(Inverted bit-coded notation FFFF hex -> all internal enable signals available)
Bit 0: Power supply of the IGBT gating shut down
Bit 1: Reserved
Bit 2: Reserved
Bit 3: Ground fault detected
Bit 4: Peak current intervention
Bit 5: I2t exceeded
Bit 6: Thermal model, overtemperature calculated
Bit 7: (heatsink, gating module, power module) overtemperature measured
Bit 8: Reserved
Bit 9: Overvoltage detected
Bit 10: Power module has completed pre-charging, ready for pulse enable
Bit 11: SH terminal missing
Bit 12: Overcurrent condition detected
Bit 13: Armature short-circuit active
Bit 14: DRIVE-CLiQ fault active
Bit 15: Vce fault detected, transistor de-saturated due to overcurrent/circuit-circuit
Status, power module (upper 16 bit, hexadecimal number):
0: Fault status (wait for OFF and fault acknowledgment)
1: Restart inhibit (wait for OFF)
2: Overvoltage condition detected -> change into the fault state
3: Undervoltage condition detected -> change into the fault state
4: Wait for bypass contactor to open -> change into the fault state
5: Wait for bypass contactor to open -> change into restart inhibit
6: Commissioning
7: Ready for pre-charging
8: Pre-charging started, DC link voltage lower than the minimum switch-on voltage
9: Pre-charging, DC link voltage end of pre-charging still not detected
10: Wait for the end of the de-bounce time of the main contactor after pre-charging has been completed
11: Pre-charging completed, ready for pulse enable
12: It was detected that the SH terminal was energized at the power module
See also: p0210

Remedy:
- check the line supply voltage
- check the line supply.

See also: p0210

A30031 Power module: Hardware current limiting, phase U

Reaction: NONE

Acknowledge: NONE

Cause: Hardware current limit for phase U responded. The pulsing in this phase is inhibited for one pulse period.
- closed-loop control is incorrectly parameterized.
- fault in the motor or in the power cables.
- the power cables exceed the maximum permissible length.
- motor load too high
- power module defective.

Remedy:
- check the motor data.
- check the motor circuit configuration (star-delta).
- check the motor load.
- check the power cable connections.
- check the power cables for short-circuit or ground fault.
- check the length of the power cables.

© Siemens AG, 2005. All rights reserved

A30032 Power module: Hardware current limiting, phase V

Reaction: NONE

Acknowledge: NONE

Cause: Hardware current limit for phase V responded. The pulsing in this phase is inhibited for one pulse period.
- closed-loop control is incorrectly parameterized.
- fault in the motor or in the power cables.
- the power cables exceed the maximum permissible length.
- motor load too high
- power module defective.

Remedy:
- check the motor data.
- check the motor circuit configuration (star-delta).
- check the motor load.
- check the power cable connections.
- check the power cables for short-circuit or ground fault.
- check the length of the power cables.

A30033 Power module: Hardware current limiting, phase W

Reaction: NONE

Acknowledge: NONE

Cause: Hardware current limit for phase W responded. The pulsing in this phase is inhibited for one pulse period.
- closed-loop control is incorrectly parameterized.
- fault in the motor or in the power cables.
- the power cables exceed the maximum permissible length.
- motor load too high
- power module defective.

Remedy:
- check the motor data.
- check the motor circuit configuration (star-delta).
- check the motor load.
- check the power cable connections.
- check the power cables for short-circuit or ground fault.
- check the length of the power cables.

F30035 Power module: Overtemp. air intake

Reaction: OFF1 (OFF2)

Acknowledge: IMMEDIATELY

Cause: Power module air intake temperature has exceeded the permissible limit value.
- ambient temperature too high.
- insufficient cooling, fan failure

Fault value (r0949):
Temperature [1 bit = 0.01 °C].

Remedy:
- check whether the fan is running.
- check the fan elements
- check whether the ambient temperature is in the permissible range.

Notice:
This fault can only be acknowledged after this alarm threshold for alarm A05002 has been fallen below.

F30036 Power module: Overtemperature electronics unit

Reaction: OFF1 (OFF2)

Acknowledge: IMMEDIATELY

Cause: Power module temperature in the module slot of the drive converter has exceeded the permissible limit value.
- insufficient cooling, fan failure.
- overload
- ambient temperature too high.

Fault value (r0949):
Temperature [1 bit = 0.01 °C].

© Siemens AG, 2005. All rights reserved

Remedy: - check whether the fan is running.
- check the fan elements
- check whether the ambient temperature is in the permissible range.
Notice:
This fault can only be acknowledged after this alarm threshold for alarm A05003 has been fallen below.

F30037 Power module: Overtemperature rectifier

Reaction: OFF2

Acknowledge: IMMEDIATELY

Cause: Power module rectifier temperature has exceeded the permissible limit value.
- insufficient cooling, fan failure.
- overload
- ambient temperature too high.
- line supply phase failure.
Fault value (r0949):
Temperature [1 bit = 0.01 °C].

Remedy: - check whether the fan is running.
- check the fan elements
- check whether the ambient temperature is in the permissible range.
- check the motor load.
- check the line supply phases.
Notice:
This fault can only be acknowledged after this alarm threshold for alarm A05004 has been fallen below.

F30040 Power module: Undervoltage 24 V

Reaction: OFF2

Acknowledge: POWER ON

Cause: Failure of the 24 V power supply for the power module.
- the 16 V threshold was fallen below for longer than 3 ms.
Fault value (r0949):
24 V voltage [1 bit = 0.1 V].
Note:
The following applies for PSA XM and PSA GL:
Failure of the 24 V power supply for the power module.
- the set lower threshold for the 24 V power supply voltage (default setting 18 V) was fallen below.

Remedy: Check the 24 V DC voltage supply to power module.

A30041 (F) Power module: Undervoltage 24 V alarm

Reaction: NONE

Acknowledge: NONE

Cause: 24 V power supply fault for the power module.
- the 16 V threshold was fallen below.
Fault value (r0949):
24 V voltage [1 bit = 0.1 V].
Note:
The following applies for PSA XM and PSA GL:
Before the last new start, a problem occurred at the 24 V power module power supply.
- the set lower threshold for the 24 V power supply voltage (default setting 18 V) was fallen below.

Remedy: Check the 24 V DC voltage supply to power module.

Reaction upon F: NONE (OFF1, OFF2, OFF3)

Acknowledge upon F: IMMEDIATELY (POWER ON)

© Siemens AG, 2005. All rights reserved

A30042	Power module: Fan operating time reached or exceeded
Reaction:	NONE
Acknowledge:	NONE
Cause:	The maximum operating time of the fan in the power module is set in p0252. This message indicates the following: Fault value (r0949, decimal): 0: The maximum fan operating time is 500 hours. 1: The maximum fan operating time has been exceeded.
Remedy:	Replace the fan in the power module and reset the operating hours counter to 0 (p0251 = 0). See also: p0251, p0252

F30043	Power module: Overvoltage 24 V
Reaction:	OFF2
Acknowledge:	POWER ON
Cause:	The following applies for PSA XM and PSA GL: 24 V power supply overvoltage for the power module. - the set, upper threshold for the 24 V power supply voltage (default setting 31.5 V) was exceeded.
Remedy:	Check the 24 V DC voltage supply to power module.

A30044 (F)	Power module: Overvoltage 24 V alarm
Reaction:	NONE
Acknowledge:	NONE
Cause:	The following applies for PSA XM and PSA GL: Before the last new start, a problem occurred at the 24 V power module power supply. - the set, upper threshold for the 24 V power supply voltage (default setting 31.5 V) was exceeded.
Remedy:	Check the 24 V DC voltage supply to power module.
Reaction upon F:	NONE (OFF1, OFF2, OFF3)
Acknowledge upon F:	IMMEDIATELY (POWER ON)

F30045	Power module: Undervoltage, supply
Reaction:	OFF2
Acknowledge:	POWER ON
Cause:	The following applies for PSA XM and PSA GL: Power supply fault in the power module. - the voltage monitoring in the internal FPGA of the PSA signals an undervoltage fault on the module. Fault value (r0949): Register value of the voltage fault register.
Remedy:	Check the 24 V DC power supply for the power module and if required replace the module.

A30046 (F)	Power module: Undervoltage, alarm
Reaction:	NONE
Acknowledge:	NONE
Cause:	The following applies for PSA XM and PSA GL: Before the last new start, a problem occurred at the power module power supply. - the voltage monitoring in the internal FPGA of the PSA signals an undervoltage fault on the module. Fault value (r0949): Register value of the voltage fault register.
Remedy:	Check the 24 V DC power supply for the power module and if required replace the module.
Reaction upon F:	NONE (OFF1, OFF2, OFF3)
Acknowledge upon F:	IMMEDIATELY (POWER ON)

© Siemens AG, 2005. All rights reserved

F30047 Cooling system: Cooling medium flow rate too low

Reaction: OFF2

Acknowledge: IMMEDIATELY

Cause: Cooling system: Fault - flow rate has fallen below the fault value

Remedy:

F30105 PM: Actual value sensing incorrect

Reaction: A_INFEED: NONE
SERVO: NONE
VECTOR: OFF2

Acknowledge: IMMEDIATELY

Cause: At least one incorrect actual value channel was detected on the Power Stack Adapter (PSA).
The incorrect actual value channels are displayed in the following diagnostic parameters.

Remedy: Evaluate the diagnostic parameters.
If the actual value channel is incorrect, check the components and if required, replace.

F30600 SI MM: STOP A initiated

Reaction: OFF2

Acknowledge: IMMEDIATELY (POWER ON)

Cause: The drive-based "Safety Integrated" function in the Motor Module (MM) has detected a fault and initiated STOP A (pulse cancellation via the safety shutdown path of the Motor Module).
- forced checking procedure of the safety shutdown path of the Motor Module unsuccessful.
- subsequent response to fault F30611 (defect in a monitoring channel).
Fault value (r0949, decimal):
0: Stop request from the Control Unit.
1005: Pulses cancelled although SH not selected and there is not internal STOP A present.
1010: Pulses enabled although SH is selected or an internal STOP A is present.
9999: Subsequent response to fault F30611.

Remedy: - select safe standstill and then de-select again.
- replace the Motor Module involved.
Re fault value = 9999:
- carry-out diagnostics for fault F30611.
Note:
CU: Control unit
MM: Motor Module
SH: Safe standstill
SI: Safety Integrated

© Siemens AG, 2005. All rights reserved

F30611 SI MM: Defect in a monitoring channel

Reaction: NONE (OFF1, OFF2, OFF3)

Acknowledge: IMMEDIATELY (POWER ON)

Cause: The drive-based "Safety Integrated" function in the Motor Module (MM) has detected a fault in the crosswise data comparison between the Control Unit (CU) and MM and initiated a STOP F.
As a result of this fault, after the parameterized transition has expired (p9858), fault F30600 (SI MM: STOP A initiated) is output.
Fault value (r0949, decimal):
0: Stop request from the Control Unit.
1 to 999:
Number of the crosswise compared data that resulted in this fault.
1: SI monitoring clock cycle (r9780, r9880).
2: SI enable safety functions (p9601, p9801).
3: SI SGE changeover tolerance time (p9650, p9850).
4: SI transition period STOP F to STOP A (p9658, p9858).
5: SI enable safe brake control (p9602, p9802).
6: SI motion enable, safety-relevant functions (p9501, internal value). This number is also displayed in r9895.
1000: Watchdog timer has expired. Within the time of approx. 5 * p9850 too many switching operations have occurred at the safety-related inputs of the Control Unit.
1001, 1002: Initialization error, change timer / check timer.
2000: Status of the SH terminals on the Control Unit and Motor Module are different.
2001: Feedback signal for safe pulse cancellation on the Control Unit and Motor Module are different.

Remedy: Re fault value = 1 to 999:
- check the crosswise compared data that resulted in a STOP F.
- carry-out a POWER ON (power off/on) for all components.
- upgrade the Motor Module software.
- upgrade the Control Unit software.

Re fault value = 1000:
- check the wiring of the safety-relevant inputs (SGE) on the Control Unit (contact problems).

Re fault value = 1001, 1002:
- carry-out a POWER ON (power off/on) for all components.
- upgrade the Motor Module software.
- upgrade the Control Unit software.

Re fault value = 2000, 2001:
- check the tolerance time SGE changeover and if required, increase the value (p9650, p9850).
- check the wiring of the safety-relevant inputs (SGE) (contact problems).
- replace the Motor Module involved.

Note:
CU: Control unit
MM: Motor Module
SGE: Safety-relevant input
SH: Safe standstill
SI: Safety Integrated

N30620 (F, A) SI MM: Safe standstill active

Reaction: NONE

Acknowledge: NONE

Cause: The "safe standstill" function was selected on the Motor Module (MM) and is active.
Note:
This message does not result in a safety stop response.

Remedy: None necessary.
Note:
MM: Motor Module
SI: Safety Integrated

Reaction upon F: OFF2

Acknowledge upon F: IMMEDIATELY (POWER ON)

Reaction upon A: NONE

Acknowledge upon A: NONE

© Siemens AG, 2005. All rights reserved

F30625 SI MM: Sign-of-life error in safety data

Reaction: OFF2

Acknowledge: IMMEDIATELY (POWER ON)

Cause: The drive-based "Safety Integrated" function on the Motor Module (MM) has detected an error in the sign-of-life of the safety data between the Control Unit (CU) and MM and initiated a STOP A.
- there is either a DRIVE-CLiQ communications error or communications have failed.
- a time slice overflow of the safety software has occurred.
Fault value (r0949, decimal):
Only for internal Siemens troubleshooting.

Remedy: - select safe standstill and then de-select again.
- carry-out a POWER ON (power off/on) for all components.
- check whether there is a DRIVE-CLiQ communications error between the Control Unit and the Motor Module involved and if required, carry-out a diagnostics routine for the faults identified.
- de-select all drive functions that are not absolutely necessary.
- reduce the number of drives.
- check the electrical cabinet design and cable routing for EMC compliance
Note:
CU: Control unit
MM: Motor Module
SI: Safety Integrated

F30630 SI MM: Brake control defective

Reaction: OFF2

Acknowledge: IMMEDIATELY (POWER ON)

Cause: The drive-based "Safety Integrated" function on the Motor Module (MM) has detected a brake control fault and initiated a STOP A.
- no motor holding brake connected.
- the motor holding brake control on the Motor Module or the Control Unit is faulty.
- a DRIVE-CLiQ communications error has occurred between the Control Unit and the Motor Module.
Fault value (r0949, decimal):
10: No brake connected or fault in the Motor Module brake control circuit ("open brake" operation).
30: Short-circuit in the brake winding or fault in the Motor Module brake control circuit ("close brake" operation).
40: Defect in the brake control circuit of the Motor Module ("brake closed" state).
60, 70: Fault in the brake control of the Control Unit or communications fault between the Control Unit and Motor Module (brake control).

Remedy: - select safe standstill and then de-select again.
- check the motor holding brake connection.
- check the function of the motor holding brake.
- check whether there is a DRIVE-CLiQ communications error between the Control Unit and the Motor Module involved and if required, carry-out a diagnostics routine for the faults identified.
- check the electrical cabinet design and cable routing for EMC compliance
- replace the Motor Module involved.
Note:
CU: Control unit
MM: Motor Module
SI: Safety Integrated

F30640 SI MM: Fault in the control shutdown path

Reaction: OFF2

Acknowledge: IMMEDIATELY (POWER ON)

Cause: The Motor Module has detected a communications error with the higher-level control to transfer the shutdown information.
Note:
This fault results in a STOP A that cannot be acknowledged.
Fault value (r0949, decimal):
Only for internal Siemens troubleshooting.

© Siemens AG, 2005. All rights reserved

Remedy: - check the PROFIsafe address in the higher-level control and Motor Modules.
- carry-out a POWER ON for all components.
- upgrade the Motor Module software.
Note:
MM: Motor Module
SI: Safety Integrated
See also: p9810

F30649 SI MM: Internal software error

Reaction: OFF2

Acknowledge: IMMEDIATELY (POWER ON)

Cause: An internal error in the Safety Integrated software on the Motor Module has occurred.
Note:
This fault results in a STOP A that cannot be acknowledged.
Fault value (r0949, hexadecimal):
Only for internal Siemens troubleshooting.

Remedy: - carry-out a POWER ON (power off/on) for all components.
- re-commission the Safety Integrated function and carry-out a POWER ON.
- upgrade the Motor Module software.
- contact the Hotline.
- replace the Motor Module.
Note:
MM: Motor Module
SI: Safety Integrated

F30650 SI MM: Acceptance test required

Reaction: OFF2

Acknowledge: IMMEDIATELY (POWER ON)

Cause: The "Safety Integrated" function on the Motor Module requires an acceptance test.
Note:
This fault results in a STOP A that can be acknowledged.
Fault value (r0949, decimal):
130: No safety parameters available for the Motor Module.
1000: Reference and actual checksum in the Motor Module are not identical (run-up).
- at least one checksum-checked piece of data is defective.
2000: Reference and actual checksum on the Motor Module are not identical (commissioning mode).
- reference checksum incorrectly entered into the Motor Module (p9899 not equal to r9898).
2003: Acceptance test is required as a safety parameter has been changed.
9999: Subsequent response of another safety-related fault that occurred at run-up that requires an acceptance test.

Remedy: Re fault value = 130:
- carry-out safety commissioning routine.
Re fault value = 1000:
- again carry-out safety commissioning routine.
- replace the CompactFlash card.
Re fault value = 2000:
- check the safety parameters in the Motor Module and adapt the reference checksum (p9899).
Re fault value = 2003:
- carry-out an acceptance test.
Re fault value = 9999:
- carry-out diagnostics for the other safety-related fault that is present.
Note:
MM: Motor Module
SI: Safety Integrated
See also: p9799, p9899

© Siemens AG, 2005. All rights reserved

F30651 SI MM: Synchronization with Control Unit unsuccessful

Reaction: OFF2

Acknowledge: IMMEDIATELY (POWER ON)

Cause: The drive-based "Safety Integrated" function is requesting synchronization of the safety time slices on the Control Unit and Motor Module. This synchronization routine was not successful.
Note:
This fault results in a STOP A that cannot be acknowledged.
Fault value (r0949, decimal):
Only for internal Siemens troubleshooting.

Remedy: - carry-out a POWER ON (power off/on) for all components.
- upgrade the Motor Module software.
- upgrade the Control Unit software.
Note:
MM: Motor Module
SI: Safety Integrated

F30652 SI MM: Monitoring clock cycle not permissible

Reaction: OFF2

Acknowledge: IMMEDIATELY (POWER ON)

Cause: The Safety Integrated monitoring clock cycle cannot be maintained due to the communication conditions requested in the system.
Note:
This fault results in a STOP A that cannot be acknowledged.
Fault value (r0949, decimal):
Only for internal Siemens troubleshooting.

Remedy: Upgrade the Motor Module software.
Note:
MM: Motor Module
SI: Safety Integrated

F30655 SI MM: Align monitoring functions

Reaction: OFF2

Acknowledge: IMMEDIATELY (POWER ON)

Cause: An error has occurred when aligning the Safety Integrated monitoring functions on the Control Unit (CU) and Motor Module (MM). Control unit and Motor Module were not able to determine a common set of supported SI monitoring functions.
- there is either a DRIVE-CLIQ communications error or communications have failed.
- Safety Integrated software releases on the Control Unit and Motor Module are not compatible with one another.
Note:
This fault results in a STOP A that cannot be acknowledged.
Fault value (r0949, hexadecimal):
Only for internal Siemens troubleshooting.

Remedy: - carry-out a POWER ON (power off/on) for all components.
- upgrade the Motor Module software.
- upgrade the Control Unit software.
- check the electrical cabinet design and cable routing for EMC compliance
Note:
CU: Control unit
MM: Motor Module
SI: Safety Integrated

© Siemens AG, 2005. All rights reserved

F30656 SI MM: Incorrect Motor Module parameter

Reaction: OFF2

Acknowledge: IMMEDIATELY (POWER ON)

Cause: When accessing the Safety Integrated parameters for the Motor Module (MM) on the CompactFlash card, an error has occurred.
Note:
This fault results in a STOP A that can be acknowledged.
Fault value (r0949, decimal):
129: Safety parameters for the Motor Module corrupted.
131: Internal software error on the Control Unit.
255: Internal Motor Module software error.

Remedy: - re-commission the safety functions.
- upgrade the Control Unit software.
- upgrade the Motor Module software.
- replace the CompactFlash card.
Note:
MM: Motor Module
SI: Safety Integrated

F30659 SI MM: Write request for parameter rejected

Reaction: OFF2

Acknowledge: IMMEDIATELY (POWER ON)

Cause: The write request for one or several Safety Integrated parameters on the Motor Module (MM) was rejected.
Note:
This fault does not result in a safety stop response.
Fault value (r0949, decimal):
10: An attempt was made to enable the SH function although this cannot be supported.
11: An attempt was made to enable the SBC function although this cannot be supported.
See also: r9771, r9871

Remedy: Re fault value = 10, 11:
- check whether there are faults in the safety function alignment between the Control Unit and the Motor Module involved (F01655, F30655) and if required, carry-out diagnostics for the faults involved.
- use a Motor Module that supports the function safe standstill or safe brake control.
- upgrade the Motor Module software.
- upgrade the Control Unit software.
Note:
MM: Motor Module
SBC: Safe brake control
SH: Safe standstill
SI: Safety Integrated

F30801 Power module DRIVE-CLiQ: Sign-of-life missing

Reaction: OFF2

Acknowledge: IMMEDIATELY

Cause: A DRIVE-CLiQ communications error has occurred between the Control Unit and the power module involved.
Fault value (r0949, hexadecimal):
0A: The sign-of-life bit in the receive telegram is not set.

Remedy: - check the electrical cabinet design and cable routing for EMC compliance
- replace the component involved.
See also: p9916

F30802 Power module: Time slice overflow

Reaction: OFF2

Acknowledge: IMMEDIATELY

Cause: Time slide overflow.

Remedy:

© Siemens AG, 2005. All rights reserved

A30804 (F) Power module: CRC

Reaction: NONE
Acknowledge: NONE
Cause: CRC error actuator
Remedy:
Reaction upon F: OFF2 (OFF1, OFF3)
Acknowledge upon F: IMMEDIATELY

F30805 Power module: Incorrect EPROM checksum

Reaction: OFF2
Acknowledge: IMMEDIATELY
Cause: Internal parameter data is corrupted
Fault value (r0949, hexadecimal):
01: EEPROM access error.
02: Too many blocks in the EEPROM.
Remedy: Replace the module.

F30809 Power module: Switching information not valid

Reaction: OFF2
Acknowledge: IMMEDIATELY
Cause: For 3P gating unit:
The last switching status word in the setpoint telegram is identified by the end ID. Such an end ID was not found.
Remedy:

A30810 (F) Power module: Watchdog timer

Reaction: NONE
Acknowledge: NONE
Cause: At run-up it was detected that the cause of the previous reset was an SAC watchdog timer overflow.
Remedy:
Reaction upon F: NONE (OFF2)
Acknowledge upon F: IMMEDIATELY

F30820 Power module DRIVE-CLiQ: Telegram error

Reaction: OFF2
Acknowledge: IMMEDIATELY
Cause: A DRIVE-CLiQ communications error has occurred between the Control Unit and the power module involved.
Fault value (r0949, hexadecimal):
01: CRC error.
02: Telegram is shorter than specified in the length byte or in the receive list.
03: Telegram is longer than specified in the length byte or in the receive list.
04: The length of the receive telegram does not match the receive list.
05: The type of the receive telegram does not match the receive list.
06: The address of the power module in the telegram and in the receive list do not match.
07: Power module expects a SYNC telegram, but the receive telegram is not a SYNC telegram.
08: Power module does not expect a SYNC telegram, but the receive telegram is a SYNC telegram.
09: The error bit in the receive telegram is set.
10: The receive telegram is too early.
Remedy: - carry-out a POWER ON.
- check the electrical cabinet design and cable routing for EMC compliance
- check the DRIVE-CLiQ wiring (interrupted cable, contacts, ...).
See also: p9916

© Siemens AG, 2005. All rights reserved

F30835 Power module DRIVE-CLiQ: Cyclic data transfer error

Reaction: OFF2

Acknowledge: IMMEDIATELY

Cause: A DRIVE-CLiQ communications error has occurred between the Control Unit and the power module involved. The nodes do not send and receive in synchronism.
Fault value (r0949, hexadecimal):
21: The cyclic telegram has not been received.
22: Timeout in the telegram receive list.
40: Timeout in the telegram send list.

Remedy: - carry-out a POWER ON.
- replace the component involved.
See also: p9916

F30836 Power module DRIVE-CLiQ: Send error for DRIVE-CLiQ data

Reaction: OFF2

Acknowledge: IMMEDIATELY

Cause: A DRIVE-CLiQ communications error has occurred between the Control Unit and the power module involved. Data were not able to be sent.
Fault value (r0949, hexadecimal):
41: Telegram type does not match send list.

Remedy: - carry-out a POWER ON.

F30837 Power module DRIVE-CLiQ: Component faulted

Reaction: OFF2

Acknowledge: IMMEDIATELY

Cause: Fault detected on the DRIVE-CLiQ component involved. Faulty hardware cannot be excluded.
Fault value (r0949, hexadecimal):
20: Error in the telegram header.
23: Receive error: The telegram buffer memory contains an error.
42: Send error: The telegram buffer memory contains an error.
43: Send error: The telegram buffer memory contains an error.

Remedy: - check the DRIVE-CLiQ wiring (interrupted cable, contacts, ...).
- check the electrical cabinet design and cable routing for EMC compliance
- if required, use another DRIVE-CLiQ socket (p9904).
- replace the component involved.

F30845 Power module DRIVE-CLiQ: Cyclic data transfer error

Reaction: OFF2

Acknowledge: IMMEDIATELY

Cause: A DRIVE-CLiQ communications error has occurred between the Control Unit and the power module involved.
Fault value (r0949, hexadecimal):
0B: Synchronization error during alternating cyclic data transfer.

Remedy: Carry-out a POWER ON.
See also: p9916

F30850 Power module: Internal software error

Reaction: OFF1 (NONE, OFF2, OFF3)

Acknowledge: POWER ON

Cause: An internal software error in the power module has occurred.
Fault value (r0949, decimal):
Only for internal Siemens troubleshooting.

Remedy: - replace power module.
- if required, upgrade the firmware in the power module.
- contact the Hotline.

© Siemens AG, 2005. All rights reserved

F30851 CU DRIVE-CLiQ: Sign-of-life missing

Reaction: OFF2 (NONE, OFF1, OFF3)

Acknowledge: IMMEDIATELY

Cause: A DRIVE-CLiQ communications error has occurred between the Control Unit and the power module involved. The DRIVE-CLiQ component did not set the sign of life to the Control Unit.
Fault value (r0949, hexadecimal):
0A: The sign-of-life bit in the receive telegram is not set.

Remedy: - upgrade the firmware of the component involved.

F30860 CU DRIVE-CLiQ: Telegram error

Reaction: OFF2

Acknowledge: IMMEDIATELY

Cause: A DRIVE-CLiQ communications error has occurred between the Control Unit and the power module involved.
Fault value (r0949, hexadecimal):
11: CRC error and the receive telegram is too early.
01: CRC error.
12: The telegram is shorter than that specified in the length byte or in the receive list and the receive telegram is too early.
02: Telegram is shorter than specified in the length byte or in the receive list.
13: The telegram is longer than that specified in the length byte or in the receive list and the receive telegram is too early.
03: Telegram is longer than specified in the length byte or in the receive list.
14: The length of the receive telegram does not match the receive list and the receive telegram is too early.
04: The length of the receive telegram does not match the receive list.
15: The type of the receive telegram does not match the receive list and the receive telegram is too early.
05: The type of the receive telegram does not match the receive list.
16: The address of the power module in the telegram and in the receive list does not match and the receive telegram is too early.
06: The address of the power module in the telegram and in the receive list do not match.
19: The error bit in the receive telegram is set and the receive telegram is too early.
09: The error bit in the receive telegram is set.
10: The receive telegram is too early.

Remedy: - carry-out a POWER ON.
- check the electrical cabinet design and cable routing for EMC compliance
- check the DRIVE-CLiQ wiring (interrupted cable, contacts, ...).
See also: p9915

F30885 CU DRIVE-CLiQ: Cyclic data transfer error

Reaction: OFF2

Acknowledge: IMMEDIATELY

Cause: A DRIVE-CLiQ communications error has occurred between the Control Unit and the power module involved. The nodes do not send and receive in synchronism.
Fault value (r0949, hexadecimal):
1A: Sign-of-life bit in the receive telegram not set and the receive telegram is too early.
21: The cyclic telegram has not been received.
22: Timeout in the telegram receive list.
40: Timeout in the telegram send list.
62: Error at the transition to cyclic operation.

Remedy: - check the power supply voltage of the component involved.
- carry-out a POWER ON.
- replace the component involved.
See also: p9915

© Siemens AG, 2005. All rights reserved

F30886 CU DRIVE-CLiQ: Error when sending DRIVE-CLiQ data

Reaction: OFF2

Acknowledge: IMMEDIATELY

Cause: A DRIVE-CLiQ communications error has occurred between the Control Unit and the power module involved. Data were not able to be sent.
Fault value (r0949, hexadecimal):
41: Telegram type does not match send list.

Remedy: - carry-out a POWER ON.

F30887 CU DRIVE-CLiQ: Component faulted

Reaction: OFF2

Acknowledge: IMMEDIATELY

Cause: Fault detected on the DRIVE-CLiQ component involved. Faulty hardware cannot be excluded.
Fault value (r0949, hexadecimal):
20: Error in the telegram header.
23: Receive error: The telegram buffer memory contains an error.
42: Send error: The telegram buffer memory contains an error.
43: Send error: The telegram buffer memory contains an error.
60: Response received too late during runtime measurement.
61: Time taken to exchange characteristic data too long.

Remedy: - check the DRIVE-CLiQ wiring (interrupted cable, contacts, ...).
- check the electrical cabinet design and cable routing for EMC compliance
- if required, use another DRIVE-CLiQ socket (p9904).
- replace the component involved.

F30895 CU DRIVE-CLiQ: Cyclic data transfer error

Reaction: OFF2 (DCBRAKE, NONE, OFF1, OFF3, STOP1, STOP2)

Acknowledge: IMMEDIATELY

Cause: A DRIVE-CLiQ communications error has occurred between the Control Unit and the power module involved.
Fault value (r0949, hexadecimal):
0B: Synchronization error during alternating cyclic data transfer.

Remedy: - carry-out a POWER ON.
See also: p9915

F30896 CU DRIVE-CLiQ: Inconsistent component properties

Reaction: OFF2 (DCBRAKE, NONE, OFF1, OFF3, STOP1, STOP2)

Acknowledge: IMMEDIATELY

Cause: The properties of the DRIVE-CLiQ component, specified by the fault value, have changed in an incompatible fashion with respect to the run-up. One cause can be, e.g. that a DRIVE-CLiQ cable or DRIVE-CLiQ component has been replaced.
Fault value (r0949, decimal):
Component ID.

Remedy: - when replacing cables, only use cables with the same length as the original cables.
- when replacing components, use the same components and firmware releases.
- carry-out a POWER ON.

F30897 DRIVE-CLiQ: No communications to the components

Reaction: OFF2 (DCBRAKE, ENCODER, NONE, OFF1, OFF3, STOP1, STOP2)

Acknowledge: IMMEDIATELY (POWER ON)

Cause: Communications with the DRIVE-CLiQ component specified by the fault value is not possible.
One cause can be, e.g. that a DRIVE-CLiQ cable has been withdrawn.
Fault value (r0949, decimal):
Component ID.

Remedy: - check the DRIVE-CLiQ connections.
- carry-out a POWER ON.

© Siemens AG, 2005. All rights reserved

F30899 (N, A) Power module: Unknown fault

Reaction: NONE (DCBRAKE, OFF1, OFF2, OFF3, STOP1, STOP2)

Acknowledge: IMMEDIATELY (POWER ON)

Cause: A fault occurred on the power module that cannot be interpreted by the Control Unit firmware. This can occur if the firmware on the power module is more recent than the firmware on the Control Unit.
Fault value (r0949, decimal):
Fault number.
If required, the significance of this new fault can be read about in a more recent description of the Control Unit.

Remedy: - replace the firmware on the power module by an older firmware version (r0128).
- upgrade the firmware on the Control Unit (r0018).

Reaction upon N: NONE

Acknowledge upon N: NONE

Reaction upon A: NONE

Acknowledge upon A: NONE

A30903 Power module: I2C bus

Reaction: NONE

Acknowledge: NONE

Cause: Communications with EPROM not possible
Fault value (r0949, hexadecimal):
Only for internal Siemens troubleshooting.

Remedy: Replace module

F30907 Power module: FPGA configuration unsuccessful

Reaction: OFF2 (DCBRAKE, NONE, OFF1, OFF3, STOP1, STOP2)

Acknowledge: IMMEDIATELY

Cause:

Remedy:

A30920 (F) Power module: Temperature sensor fault

Reaction: NONE

Acknowledge: NONE

Cause: When evaluating the temperature sensor, an error occurred.
Alarm value (r2124, decimal):
1: Wire breakage or sensor not connected (KTY: R > 1630 Ohm).
2: Measured resistance too low (PTC: R < 20 Ohm, KTY: R < 50 Ohm).

Remedy: - check that the sensor is connected correctly.
- replace sensor.

Reaction upon F: NONE (DCBRAKE, OFF1, OFF2, OFF3, STOP1, STOP2)

Acknowledge upon F: IMMEDIATELY

A30999 (F, N) Power module: Unknown alarm

Reaction: NONE

Acknowledge: NONE

Cause: An alarm occurred on the power module that cannot be interpreted by the Control Unit firmware. This can occur if the firmware on the power module is more recent than the firmware on the Control Unit.
Alarm value (r2124, decimal):
Alarm number.
If required, the significance of this new alarm can be read about in a more recent description of the Control Unit.

Remedy: - replace the firmware on the power module by an older firmware version (r0128).
- upgrade the firmware on the Control Unit (r0018).

© Siemens AG, 2005. All rights reserved

Reaction upon F:	NONE (DCBRAKE, OFF1, OFF2, OFF3, STOP1, STOP2)
Acknowledge upon F:	IMMEDIATELY (POWER ON)
Reaction upon N:	NONE
Acknowledge upon N:	NONE

F31100 Encoder 1: Zero mark clearance error

Reaction: A_INFEED: NONE (DCBRAKE, OFF1, OFF2, OFF3, STOP1, STOP2)
SERVO: ENCODER (DCBRAKE, NONE, OFF1, OFF2, OFF3, STOP1, STOP2)
VECTOR: ENCODER (DCBRAKE, NONE, OFF1, OFF2, OFF3, STOP1, STOP2)

Acknowledge: READY

Cause: The measured zero mark clearance does not correspond to the parameterized zero mark clearance.
For distance-coded encoders, the zero mark distance is determined from zero marks detected pairs. This means that if a zero mark is missing, depending on the pair generation, this cannot result in a fault and also has no effect in the system.
The zero mark clearance for the zero mark monitoring is set in p0425 (rotary encoder) or p0424 (linear encoder).
Fault value (r0949, decimal):
Last measured zero mark clearance in increments (4 increments = 1 encoder pulse).
The sign designates the direction of motion when detecting the zero mark clearance (distance).

Remedy: - check that the encoder cables are routed in compliance with EMC.
- check the plug connections.
. check the encoder type (encoder with equidistant zero marks).
- adapt the parameter for the distance between zero marks (p0424, p0425).
- replace the encoder or encoder cable.

F31101 Encoder 1: Zero mark failed

Reaction: A_INFEED: NONE (DCBRAKE, OFF1, OFF2, OFF3, STOP1, STOP2)
SERVO: ENCODER (DCBRAKE, NONE, OFF1, OFF2, OFF3, STOP1, STOP2)
VECTOR: ENCODER (DCBRAKE, NONE, OFF1, OFF2, OFF3, STOP1, STOP2)

Acknowledge: READY

Cause: The 1.5 x parameterized zero mark distance was exceeded.
The zero mark clearance for the zero mark monitoring is set in p0425 (rotary encoder) or p0424 (linear encoder).
Fault value (r0949, decimal):
Number of increments after POWER ON or since the last zero mark that was detected (4 increments = 1 encoder pulse).

Remedy: - check that the encoder cables are routed in compliance with EMC.
- check the plug connections.
. check the encoder type (encoder with equidistant zero marks).
- adapt the parameter for the clearance between zero marks (p0425).
- replace the encoder or encoder cable.

F31110 Encoder 1: EnDat communications error

Reaction: A_INFEED: NONE
SERVO: ENCODER (DCBRAKE, NONE)
VECTOR: ENCODER (DCBRAKE, NONE)

Acknowledge: READY

Cause: Serial communication protocol transfer error between the encoder and evaluation module SMCxx.
Fault value (r0949, binary):
Bit 0: Alarm bit in the position protocol.
Bit 1: Incorrect quiescent level on the data line.
Bit 2: EnDat encoder does not respond (does not supply a start bit within 50 ms).
Bit 3: CRC error: The checksum in the protocol from the encoder does not match the data.
Bit 4: Incorrect encoder acknowledgement: The encoder incorrectly understood the task (request) or cannot execute it.
Bit 5: Internal error in the EnDat driver: An illegal mode command was requested.
Bit 6: Timeout with cyclically reading.

© Siemens AG, 2005. All rights reserved

Remedy: Re fault value:
Bit 0 = 1: Encoder defective. F31111 may provide additional details.
Bit 1 = 1: Incorrect encoder type / replace the encoder or encoder cable.
Bit 2 = 1: Incorrect encoder type / replace the encoder or encoder cable.
Bit 3 = 1: EMC / connect the cable shield, replace the encoder or encoder cable.
Bit 4 = 1: EMC / connect the cable shield, replace the encoder or encoder cable, replace the Sensor Module.
Bit 5 = 1: EMC / connect the cable shield, replace the encoder or encoder cable, replace the Sensor Module.
Bit 6 = 1: Update the Sensor Module firmware.

F31111 (A) Encoder 1: Absolute value encoder EnDat, internal fault/error

Reaction: A_INFEED: NONE
SERVO: ENCODER (DCBRAKE, NONE)
VECTOR: ENCODER (DCBRAKE, NONE)

Acknowledge: READY

Cause: The EnDat encoder fault word contains fault bits that have been set.
Fault value (r0949, binary):
Bit 0: Lighting system failed.
Bit 1: Signal amplitude too low.
Bit 2: Position value incorrect.
Bit 3: Encoder power supply overvoltage condition.
Bit 4: Encoder power supply undervoltage condition.
Bit 5: Encoder power supply overcurrent condition.
Bit 6: The battery must be changed.

Remedy: Re fault value, bit 0 = 1:
Encoder is defective. Replace the encoder, where the motor encoder has a direct DRIVE-CLiQ socket: Replace the motor.
Re fault value, bit 1 = 1:
Encoder is defective. Replace the encoder, where the motor encoder has a direct DRIVE-CLiQ socket: Replace the motor.
Re fault value, bit 2 = 1:
Encoder is defective. Replace the encoder, where the motor encoder has a direct DRIVE-CLiQ socket: Replace the motor.
Re fault value, bit 3 = 1:
5 V power supply voltage fault.
When using an SMC. Check the plug-in cable between the encoder and SMC or replace the SMC.
When a motor encoder with a direct DRIVE-CLiQ connection is used: Replace the motor.
Re fault value, bit 4 = 1:
5 V power supply voltage fault.
When using an SMC. Check the plug-in cable between the encoder and SMC or replace the SMC.
When using a motor with DRIVE-CLiQ: Replace the motor.
Re fault value, bit 5 = 1:
Encoder is defective. Replace the encoder, where the motor encoder has a direct DRIVE-CLiQ socket: Replace the motor.
Re fault value, bit 6 = 1:
The battery must be changed - only for encoders with battery back-up.

Reaction upon A: NONE

Acknowledge upon A: NONE

© Siemens AG, 2005. All rights reserved

F31115 Encoder 1: Amplitude error track A or B (A^2 + B^2)

Reaction: A_INFEED: NONE
SERVO: ENCODER (DCBRAKE, NONE)
VECTOR: ENCODER (DCBRAKE, NONE)

Acknowledge: READY

Cause: The amplitude (A^2 + B^2) does not lie within the tolerance bandwidth (software monitoring function).
SMC20:
The nominal signal level of the encoder must lie in the range 375 mV to 600 mV (500 mV -25 % / +20 %).
On the other hand, the response thresholds are < 230 mV and > 750 mV (frequency characteristic).
SMC10:
The nominal signal level is at 2900 mV (2.0 Vrms). The response thresholds are at < 1070 mV and > 3535 mV.
Fault value (r0949, decimal):
Low word:
Signal level, track A (16 bits with sign).
High word:
Signal level, track B (16 bits with sign).
SMC20:
A signal level of 500 mV peak value corresponds to the numerical value 5333 hex = 21299 dec.
SMC10:
A signal level of 2900 mV peak value corresponds to the numerical value 6666 hex = 26214 dec.

Remedy: - check that the encoder cables are routed in compliance with EMC.
- check the plug connections.
- replace the encoder or encoder cable.
- check the encoder module (e.g. contacts).

F31116 Encoder 1: Amplitude error, monitoring track A + B

Reaction: A_INFEED: NONE
SERVO: ENCODER (DCBRAKE, NONE)
VECTOR: ENCODER (DCBRAKE, NONE)

Acknowledge: IMMEDIATELY

Cause: The amplitude of the rectified encoder signals A and B is not within the tolerance bandwidth (hardware monitoring).
The nominal signal level of the encoder must lie in the range 375 mV to 600 mV (500 mV -25 % / +20 %).
On the other hand, the hardware response thresholds are at < 176 mV and > 1.35 V.
Fault value (r0949, decimal):
Low word: Signal level, track A (16 bits with sign).
High word: Signal level, track B (16 bits with sign).
A signal level of 500 mV corresponds to the numerical value 5333 hex = 21299 dec.
These analog values are not measured at the same time with the hardware fault output.

Remedy: - check that the encoder cables are routed in compliance with EMC.
- check the plug connections.
- replace the encoder or encoder cable.
- check the encoder module (e.g. contacts).

F31117 Encoder 1: Inversion error, signals A and B

Reaction: A_INFEED: NONE
SERVO: ENCODER (DCBRAKE, NONE)
VECTOR: ENCODER (DCBRAKE, NONE)

Acknowledge: IMMEDIATELY

Cause: For a square-wave signal encoder (TTL. bipolar. double ended) the A* and B* signals are not inverted with respect to signals A and B.

Remedy: Check the setting of p0405: p0405.2 = 1 is only possible if the encoder is connected at X520.
Check the encoder/cable: Does the encoder supply TTL signals and the associated inverted signals?

© Siemens AG, 2005. All rights reserved

F31118 Encoder 1: Speed difference outside the tolerance range

Reaction: A_INFEED: NONE
SERVO: ENCODER (DCBRAKE, NONE)
VECTOR: ENCODER (DCBRAKE, NONE)

Acknowledge: READY

Cause: For an HTL/TTL encoder, the speed difference between two sampling cycles has exceeded the value in p0492.
Encoder 1 is used as motor encoder and can be effective has fault response to change over to sensorless operation.
Fault value (r0949, decimal):
Only for internal Siemens troubleshooting.

Remedy: - check the tachometer feeder cable for interruptions.
- check the grounding of the tachometer shielding.
- if required, increase the maximum speed difference per sampling cycle (p0492).

F31120 Encoder 1: Power supply volt.

Reaction: A_INFEED: NONE
SERVO: ENCODER (DCBRAKE, NONE)
VECTOR: ENCODER (DCBRAKE, NONE)

Acknowledge: READY

Cause: Encoder power supply voltage fault.
Note:
If the encoder cables 6FX2002-2EQ00-.... and 6FX2002-2CH00-.... are interchanged, this can result in the encoder being destroyed because the pins of the operating voltage are reversed.
Fault value (r0949, binary):
Bit 0: Undervoltage condition on the sense line (threshold 4.75 V).
Bit 1: Encoder power supply voltage overcurrent condition (threshold 450 mA).

Remedy: For fault value, bit 0 = 1:
- correct encoder cable connected?
- check the plug connections of the encoder cable.
- SMC30: Check the parameterization (p0404.22).
For fault value, bit 1 = 1:
- correct encoder cable connected?
- replace the encoder or encoder cable.

F31121 (N) Encoder 1: Coarse position incorrect

Reaction: A_INFEED: NONE
SERVO: ENCODER (NONE)
VECTOR: ENCODER (NONE)

Acknowledge: READY

Cause: For the actual value sensing, an error was detected on the module. As a result of this error, it must be assumed that the actual value sensing supplies an incorrect coarse position.

Remedy: Replace the motor with DRIVE-CLiQ or the appropriate Sensor Module.

Reaction upon N: NONE

Acknowledge upon N: NONE

F31129 (N) Encoder 1: Position difference, hall sensor/track C/D and A/B too large

Reaction: A_INFEED: NONE
SERVO: ENCODER (DCBRAKE, NONE)
VECTOR: ENCODER (DCBRAKE, NONE)

Acknowledge: READY

Cause: The error of track C/D is greater than +/-15 ° mechanical or +/-60 ° electrical.
One period of track C/D corresponds to 360 ° mechanical.
One period of the Hall signal corresponds to 360 ° electrical.
The monitoring responds if, for example, Hall sensors are connected as equivalent for the C/D tracks with the incorrect rotational sense or supply values that are not accurate enough.
After the fine synchronization using one reference mark or 2 reference marks for distance-coded encoders, this fault is no longer initiated, but instead, Alarm A31429.
Fault value (r0949, decimal):
Measured deviation as mechanical angle (16 bits with sign, 182 dec corresponds to 1 °).

© Siemens AG, 2005. All rights reserved

Remedy: - track C or D not connected.
- correct the direction of rotation of the Hall sensor possibly connected as equivalent for track C/D.
- check that the encoder cables are routed in compliance with EMC.
- check the adjustment of the Hall sensor.

Reaction upon N: NONE

Acknowledge upon N: NONE

F31130 Encoder 1: Zero mark and position from the coarse synchronization are incorrect

Reaction: A_INFEED: NONE
SERVO: ENCODER (DCBRAKE, NONE, OFF1, OFF2, OFF3, STOP1, STOP2)
VECTOR: ENCODER (DCBRAKE, NONE, OFF1, OFF2, OFF3, STOP1, STOP2)

Acknowledge: READY

Cause: After initializing the pole position using track C/D, Hall signals or pole position identification routine, the zero mark was detected outside the permissible range. For distance-coded encoders, the test is carried-out after passing 2 zero marks. Fine synchronization was not carried-out.
The deviation may be up to 18 ° mechanical or up to 60 ° electrical.
Fault value (r0949, decimal):
Normalization: 32768 = 180 °
High word:
Mechanical zero mark position determined.
If the initialization via a track C/D is selected in p0404, then it is checked whether the zero mark occurs in an angular range of +/-18 ° mechanical.
Low word:
Deviation of the zero mark from the expected position as electrical angle.
If the correction of the commutation position with the zero mark is selected in p0404, then a difference of a maximum of +/- 60 ° electrical is permitted.
This fault can occur when automatically determining the angular commutation offset (p0431) with p1990=1. This has no significance here and can be acknowledged without taking any other measures.

Remedy: - check that the encoder cables are routed in compliance with EMC.
- check the plug connections.
- if the Hall sensor is used as an equivalent for track C/D, check the connection.
- check the connection of track C or D.
- replace the encoder or encoder cable.

F31131 Encoder 1: Deviation, position incremental/absolute too large

Reaction: A_INFEED: NONE
SERVO: ENCODER (DCBRAKE, NONE, OFF1, OFF2, OFF3, STOP1, STOP2)
VECTOR: ENCODER (DCBRAKE, NONE, OFF1, OFF2, OFF3, STOP1, STOP2)

Acknowledge: READY

Cause: When cyclically reading the absolute position, an excessively high deviation to the incremental position was detected. The absolute position that was read is rejected.
Limit value for the deviation:
- EnDat encoder: Is supplied from the encoder and is a minimum of 2 quadrants (e.g. EQI 1325 > 2 quadrants, EQN 1325 > 50 quadrants).
- other encoders: 15 pulses = 60 quadrants.
Fault value (r0949, decimal):
Deviation in quadrants (1 pulse = 4 quadrants).

Remedy: - check that the encoder cables are routed in compliance with EMC.
- check the plug connections.
- replace the encoder or encoder cable.
- check whether the coding disk is dirty or there are strong ambient magnetic fields.

© Siemens AG, 2005. All rights reserved

F31150 Encoder 1: Initialization error

Reaction: A_INFEED: NONE
SERVO: ENCODER (DCBRAKE, NONE, OFF1, OFF2, OFF3, STOP1, STOP2)
VECTOR: ENCODER (DCBRAKE, NONE, OFF1, OFF2, OFF3, STOP1, STOP2)

Acknowledge: READY

Cause: Encoder functionality selected in p0404 is not operating correctly.
Fault value (r0949, hexadecimal):
The fault value is a bit field. Every set bit indicates functionality that is faulted.
The bit assignment corresponds to that of p0404 (e.g. bit 5 set: Error track C/D).
See also: p0404

Remedy: - Check that p0404 is correctly set.
- check the encoder type used (incremental/absolute value) and for SMCxx, the encoder cable.
- if relevant, note additional fault/error messages that describe the fault in detail.

F31405 (N, A) Encoder 1: Encoder evaluation temperature too high

Reaction: NONE (DCBRAKE, OFF1, OFF2, OFF3, STOP1, STOP2)

Acknowledge: IMMEDIATELY (POWER ON)

Cause: The encoder evaluation for a motor with DRIVE-CLiQ has detected an excessively high temperature.
The fault threshold is 125 ° C.
Alarm value (r2124, decimal):
Measured board/module temperature in 0.1 °C.

Remedy: Reduce the ambient temperature for the DRIVE-CLiQ connection of the motor.

Reaction upon N: NONE

Acknowledge upon N: NONE

Reaction upon A: NONE

Acknowledge upon A: NONE

A31410 (F, N) Encoder 1: Serial communications

Reaction: NONE

Acknowledge: NONE

Cause: Serial communication protocol transfer error between the encoder and evaluation module SMCxx.
Alarm value (r2124, binary):
Bit 0: Alarm bit in the position protocol.
Bit 1: Incorrect quiescent level on the data line.
Bit 2: EnDat encoder does not respond (does not supply a start bit).
Bit 3: CRC error: The checksum in the protocol from the encoder does not match the data.
Bit 4: Incorrect encoder acknowledgement: The encoder incorrectly understood the task (request) or cannot execute it.
Bit 5: Internal error in the EnDat driver: An illegal mode command was requested.
Bit 6: Position value longer than 40 bits.

Remedy: - check that the encoder cables are routed in compliance with EMC.
- check the plug connections.
- replace the encoder.

Reaction upon F: A_INFEED: NONE
SERVO: NONE (DCBRAKE, ENCODER, OFF1, OFF2, OFF3, STOP1, STOP2)
VECTOR: NONE (DCBRAKE, ENCODER, OFF1, OFF2, OFF3, STOP1, STOP2)

Acknowledge upon F: IMMEDIATELY

Reaction upon N: NONE

Acknowledge upon N: NONE

© Siemens AG, 2005. All rights reserved

A31411 (F, N) Encoder 1: EnDat encoder signals alarms

Reaction: NONE

Acknowledge: NONE

Cause: The error word of the EnDat encoder has alarm bits that have been set.
Alarm value (r2124, binary):
Bit 0: Frequency exceeded (speed too high).
Bit 1: Temperature exceeded.
Bit 2: Control reserve, lighting system exceeded.
Bit 3: Battery discharged.
Bit 4: Reference point passed.

Remedy: Replace encoder.

Reaction upon F: A_INFEED: NONE (DCBRAKE, OFF1, OFF2, OFF3, STOP1, STOP2)
SERVO: NONE (DCBRAKE, ENCODER, OFF1, OFF2, OFF3, STOP1, STOP2)
VECTOR: NONE (DCBRAKE, ENCODER, OFF1, OFF2, OFF3, STOP1, STOP2)

Acknowledge upon F: IMMEDIATELY

Reaction upon N: NONE

Acknowledge upon N: NONE

A31414 (F, N) Encoder 1: Amplitude error track C or D (C^2 + D^2)

Reaction: NONE

Acknowledge: NONE

Cause: The amplitude (C^2 + D^2) of track C or D of the encoder or from the Hall signals, is not within the tolerance bandwidth.
The nominal signal must be in the range 375 mV to 600 mV (500 mV -25 % / +20 %).
On the other hand, the response thresholds are < 230 mV and > 750 mV (frequency characteristic).
This fault also occurs if the A/D converter is overcontrolled.
If the amplitude is not within the tolerance bandwidth, then it cannot be used to initialize the start position.
Alarm value (r2124, decimal):
Low word: Signal level, track C (16 bits with sign).
High word: Signal level, track D (16 bits with sign).
A signal level of 500 mV corresponds to the numerical value 5333 hex = 21299 dec.

Remedy:
- check that the encoder cables are routed in compliance with EMC.
- check the plug connections.
- replace the encoder or encoder cable.
- check the encoder module (e.g. contacts).
- check the Hall sensor box

Reaction upon F: A_INFEED: NONE (DCBRAKE, OFF1, OFF2, OFF3, STOP1, STOP2)
SERVO: NONE (DCBRAKE, ENCODER, OFF1, OFF2, OFF3, STOP1, STOP2)
VECTOR: NONE (DCBRAKE, ENCODER, OFF1, OFF2, OFF3, STOP1, STOP2)

Acknowledge upon F: IMMEDIATELY

Reaction upon N: NONE

Acknowledge upon N: NONE

© Siemens AG, 2005. All rights reserved

N31415 (F, A) Encoder 1: Amplitude alarm, track A or B (A^2 + B^2)

Reaction: NONE

Acknowledge: NONE

Cause: The amplitude (A^2 + B^2) of track A or B is not within the tolerance bandwidth.
SMC20:
The nominal signal level is at 500 mV (500 mV -25 % / +20 %). The response threshold is < 300 mV.
SMC10:
The nominal signal level is at 2900 mV (2.0 Vrms). The response threshold is < 1414 mV (1.0 Vrms).
Alarm value (r2124, decimal):
Low word:
Amplitude square root(A*A + B*B).
SMC20:
A signal level of 500 mV peak value corresponds to the numerical value 299A hex = 10650 dec.
SMC10:
A signal level of 2900 mV peak value corresponds to the numerical value 3333 hex = 13107 dec.
High word:
Angle 0 to 65535 corresponds to 0 to 360 degrees of the fine position. Zero degrees is at the negative zero crossover of track B.

Remedy: - check the speed range, frequency characteristic (amplitude characteristic) of the measuring equipment is not sufficient for the speed range.
- check that the encoder cables are routed in compliance with EMC.
- check the plug connections.
- replace the encoder or encoder cable.
- check the encoder module (e.g. contacts).
- dirty code disk
- aged lighting system.

Reaction upon F: A_INFEED: NONE (DCBRAKE, OFF1, OFF2, OFF3, STOP1, STOP2)
SERVO: NONE (DCBRAKE, ENCODER, OFF1, OFF2, OFF3, STOP1, STOP2)
VECTOR: NONE (DCBRAKE, ENCODER, OFF1, OFF2, OFF3, STOP1, STOP2)

Acknowledge upon F: IMMEDIATELY

Reaction upon A: NONE

Acknowledge upon A: NONE

A31418 (F, N) Encoder 1: Speed difference per sampling rated exceeded

Reaction: NONE

Acknowledge: NONE

Cause: For an HTL/TTL encoder, the speed difference between two sampling cycles has exceeded the value in p0492.
Alarm value (r2124, decimal):
Only for internal Siemens troubleshooting.

Remedy: - check the tachometer feeder cable for interruptions.
- check the grounding of the tachometer shielding.
- if required, increase the setting of p0492.

Reaction upon F: NONE (DCBRAKE, OFF1, OFF2, OFF3, STOP1, STOP2)

Acknowledge upon F: IMMEDIATELY

Reaction upon N: NONE

Acknowledge upon N: NONE

© Siemens AG, 2005. All rights reserved

A31419 (F, N) Encoder 1: Track A or B outside the tolerance range

Reaction: NONE

Acknowledge: NONE

Cause: The amplitude, phase or offset correction for track A or B is at the limit.
Amplitude error correction: Amplitude B / Amplitude A = 0.78 ... 1.27
Phase: <84 degrees or >96 degrees
SMC20: Offset correction: +/-140 mV
SMC10: Offset correction: +/-650 mV
Alarm value (r2124, hexadecimal):
xxx1: Minimum of the offset correction, track B
xxx2: Maximum of the offset correction, track B
xx1x: Minimum of the offset correction, track A
xx2x: Maximum of the offset correction, track A
x1xx: Minimum of the amplitude correction, track B/A
x2xx: Maximum of the amplitude correction, track B/A
1xxx: Minimum of the phase error correction
2xxx: Maximum of the phase error correction

Remedy: - check mechanical mounting tolerances for encoders without their own bearings (e.g. toothed-wheel encoders).
- check the plug connections (also the transition resistance).
- check the encoder signals.
- replace the encoder or encoder cable.

Reaction upon F: A_INFEED: NONE (DCBRAKE, OFF1, OFF2, OFF3, STOP1, STOP2)
SERVO: NONE (DCBRAKE, ENCODER, OFF1, OFF2, OFF3, STOP1, STOP2)
VECTOR: NONE (DCBRAKE, ENCODER, OFF1, OFF2, OFF3, STOP1, STOP2)

Acknowledge upon F: IMMEDIATELY

Reaction upon N: NONE

Acknowledge upon N: NONE

A31429 (F, N) Encoder 1: Position difference, hall sensor/track C/D and A/B too large

Reaction: NONE

Acknowledge: NONE

Cause: The error of track C/D is greater than +/-15 ° mechanical or +/-60 ° electrical.
One period of track C/D corresponds to 360 ° mechanical.
One period of the Hall signal corresponds to 360 ° electrical.
The monitoring responds if, for example, Hall sensors are connected as equivalent for the C/D tracks with the incorrect rotational sense or supply values that are not accurate enough.
Alarm value (r2124, decimal):
Measured deviation as mechanical angle (16 bits with sign, 182 dec corresponds to 1 °).

Remedy: - track C or D not connected.
- correct the direction of rotation of the Hall sensor possibly connected as equivalent for track C/D.
- check that the encoder cables are routed in compliance with EMC.
- check the adjustment of the Hall sensor.

Reaction upon F: A_INFEED: NONE (DCBRAKE, OFF1, OFF2, OFF3, STOP1, STOP2)
SERVO: NONE (DCBRAKE, ENCODER, OFF1, OFF2, OFF3, STOP1, STOP2)
VECTOR: NONE (DCBRAKE, ENCODER, OFF1, OFF2, OFF3, STOP1, STOP2)

Acknowledge upon F: IMMEDIATELY

Reaction upon N: NONE

Acknowledge upon N: NONE

© Siemens AG, 2005. All rights reserved

F31801 Encoder 1 DRIVE-CLiQ: Sign-of-life missing

Reaction: A_INFEED: OFF2 (NONE)
SERVO: ENCODER (DCBRAKE, NONE)
VECTOR: ENCODER (DCBRAKE, NONE)

Acknowledge: IMMEDIATELY

Cause: DRIVE-CLiQ communications error between the Control Unit and the encoder involved.
Fault value (r0949, hexadecimal):
0A: The sign-of-life bit in the receive telegram is not set.

Remedy: - check the electrical cabinet design and cable routing for EMC compliance
- replace the component involved.
See also: p9916

F31802 Encoder 1: Time slice overflow

Reaction: A_INFEED: OFF2 (NONE)
SERVO: ENCODER (DCBRAKE, NONE)
VECTOR: ENCODER (DCBRAKE, NONE)

Acknowledge: IMMEDIATELY

Cause: Time slice overflow, encoder 1.
Fault value (r0949, decimal):
9: Time slice overflow of the fast (current controller clock cycle) time slice.
10: Time slice overflow of the average time slice.
12: Time slice overflow of the slow time slice.
999: Timeout when waiting for SYNO, e.g. unexpected return to non-cyclic operation.

Remedy: Reduce the current controller frequency.

F31804 Encoder 1: CRC CODE RAM

Reaction: A_INFEED: OFF2 (NONE)
SERVO: ENCODER (DCBRAKE, NONE)
VECTOR: ENCODER (DCBRAKE, NONE)

Acknowledge: IMMEDIATELY

Cause: The checksum via the CODE-RAM of the Sensor Module has changed in operation.
Fault value (r0949, hexadecimal):
Difference between the checksum at POWER ON and the actual checksum.

Remedy: Hardware defect: Replace the Sensor Module.
Firmware error: If required, upgrade the firmware.

F31805 Encoder 1: Incorrect EPROM checksum

Reaction: A_INFEED: OFF2 (NONE)
SERVO: ENCODER (DCBRAKE, NONE)
VECTOR: ENCODER (DCBRAKE, NONE)

Acknowledge: IMMEDIATELY

Cause: Internal parameter data is corrupted.
Fault value (r0949, hexadecimal):
01: EEPROM access error.
02: Too many blocks in the EEPROM.

Remedy: Replace the module.

F31806 Encoder 1: Initialization unsuccessful

Reaction: A_INFEED: OFF2 (NONE)
SERVO: ENCODER (DCBRAKE, NONE)
VECTOR: ENCODER (DCBRAKE, NONE)

Acknowledge: READY

Cause: The encoder was not successfully initialized.
Fault value (r0949, hexadecimal):
1, 2, 3: Encode initialization with the motor rotating.

Remedy: Acknowledge the fault.

© Siemens AG, 2005. All rights reserved

F31811 Encoder 1: Encoder serial number changed

Reaction: A_INFEED: OFF2 (NONE)
SERVO: NONE (ENCODER, OFF2)
VECTOR: NONE (ENCODER, OFF2)

Acknowledge: IMMEDIATELY

Cause: The serial number of the motor encoder of a synchronous motor has changed. The change was only checked for encoders with serial number (e.g. EnDat encoders) and build-in motors (e.g. p300 = 401) or third-party motors (p0300 = 2).
Cause 1:
The motor with integrated and adjusted encoder was replaced.
Cause 2:
The encoder was replaced.
Cause 3:
A third-party, build-in or linear motor was re-commissioned.
Cause 4:
The firmware was updated to a version that checks the encoder serial number.

Remedy: Re causes 1, 4:
Accept the new serial number with p0440 = 1.
Re causes 2, 3:
Carry-out an automatic adjustment using the pole position identification routine. First, accept the serial number with p0440 = 1. Acknowledge the fault. Initiate the pole position identification routine with p1990 = 1. Then check that the pole position identification routine is correctly executed.
SERVO: If a pole position identification technique is selected in p1980, and if p0301 does not contain a motor type with an encoder adjusted in the factory, then p1990 is automatically activated.
or
Set the adjustment using parameter p0431. In this case, the new serial number is automatically accepted.
or
Mechanically adjust the encoder. Accept the new serial number with p0440 = 1.

F31820 Encoder 1 DRIVE-CLiQ: Telegram error

Reaction: A_INFEED: OFF2
SERVO: ENCODER (DCBRAKE, NONE)
VECTOR: ENCODER (DCBRAKE, NONE)

Acknowledge: IMMEDIATELY

Cause: DRIVE-CLiQ communications error between the Control Unit and the encoder involved.
Fault value (r0949, hexadecimal):
01: CRC error.
02: Telegram is shorter than specified in the length byte or in the receive list.
03: Telegram is longer than specified in the length byte or in the receive list.
04: The length of the receive telegram does not match the receive list.
05: The type of the receive telegram does not match the receive list.
06: The address of the encoder in the telegram and in the receive list do not match.
07: The encoder expects a SYNC telegram, but the receive telegram is not a SYNC telegram.
08: The encoder does not expect a SYNC telegram, but the receive telegram is a SYNC telegram.
09: The error bit in the receive telegram is set.
10: The receive telegram is too early.

Remedy: - carry-out a POWER ON.
- check the electrical cabinet design and cable routing for EMC compliance
- check the DRIVE-CLiQ wiring (interrupted cable, contacts, ...).
See also: p9916

© Siemens AG, 2005. All rights reserved

F31835 Encoder 1 DRIVE-CLiQ: Cyclic data transfer error

Reaction: A_INFEED: OFF2
SERVO: ENCODER (DCBRAKE, NONE)
VECTOR: ENCODER (DCBRAKE, NONE)

Acknowledge: IMMEDIATELY

Cause: DRIVE-CLiQ communications error between the Control Unit and the encoder involved. The nodes do not send and receive in synchronism.
Fault value (r0949, hexadecimal):
21: The cyclic telegram has not been received.
22: Timeout in the telegram receive list.
40: Timeout in the telegram send list.

Remedy: - carry-out a POWER ON.
- replace the component involved.
See also: p9916

F31836 Encoder 1 DRIVE-CLiQ: Send error for DRIVE-CLiQ data

Reaction: A_INFEED: OFF2
SERVO: ENCODER (DCBRAKE, NONE)
VECTOR: ENCODER (DCBRAKE, NONE)

Acknowledge: IMMEDIATELY

Cause: DRIVE-CLiQ communications error between the Control Unit and the encoder involved. Data were not able to be sent.
Fault value (r0949, hexadecimal):
41: Telegram type does not match send list.

Remedy: - carry-out a POWER ON.

F31837 Encoder 1 DRIVE-CLiQ: Component faulted

Reaction: A_INFEED: OFF2
SERVO: ENCODER (DCBRAKE, NONE)
VECTOR: ENCODER (DCBRAKE, NONE)

Acknowledge: IMMEDIATELY

Cause: Fault detected on the DRIVE-CLiQ component involved. Faulty hardware cannot be excluded.
Fault value (r0949, hexadecimal):
20: Error in the telegram header.
23: Receive error: The telegram buffer memory contains an error.
42: Send error: The telegram buffer memory contains an error.
43: Send error: The telegram buffer memory contains an error.

Remedy: - check the DRIVE-CLiQ wiring (interrupted cable, contacts, ...).
- check the electrical cabinet design and cable routing for EMC compliance
- if required, use another DRIVE-CLiQ socket (p9904).
- replace the component involved.

F31845 Encoder 1 DRIVE-CLiQ: Cyclic data transfer error

Reaction: A_INFEED: OFF2
SERVO: ENCODER (DCBRAKE, NONE)
VECTOR: ENCODER (DCBRAKE, NONE)

Acknowledge: IMMEDIATELY

Cause: DRIVE-CLiQ communications error between the Control Unit and the encoder involved.
Fault value (r0949, hexadecimal):
0B: Synchronization error during alternating cyclic data transfer.

Remedy: Carry-out a POWER ON.
See also: p9916

© Siemens AG, 2005. All rights reserved

F31850 Encoder 1: Sensor Module, internal software error

Reaction: A_INFEED: OFF2 (NONE)
SERVO: ENCODER (DCBRAKE, NONE)
VECTOR: ENCODER (DCBRAKE, NONE)

Acknowledge: POWER ON

Cause: Internal software error in the Sensor Module of encoder 1.
Fault value (r0949, decimal):
1: Background time slice is blocked.
2: Checksum over the code memory is not OK.
10000: OEM memory of the EnDat encoder contains data that cannot be interpreted.

Remedy: - replace the Sensor Module.
- if required, upgrade the firmware in the Sensor Module.
- contact the Hotline.

F31851 CU DRIVE-CLiQ: Sign-of-life missing

Reaction: A_INFEED: NONE (OFF1, OFF2)
SERVO: ENCODER (DCBRAKE, NONE)
VECTOR: ENCODER (DCBRAKE, NONE)

Acknowledge: IMMEDIATELY

Cause: A DRIVE-CLiQ communications error has occurred between the Control Unit and the power module involved. The DRIVE-CLiQ component did not set the sign of life to the Control Unit.
Fault value (r0949, hexadecimal):
0A: The sign-of-life bit in the receive telegram is not set.

Remedy: - upgrade the firmware of the component involved.

F31860 CU DRIVE-CLiQ: Telegram error

Reaction: A_INFEED: NONE (OFF1, OFF2)
SERVO: ENCODER (DCBRAKE, NONE)
VECTOR: ENCODER (DCBRAKE, NONE)

Acknowledge: IMMEDIATELY

Cause: DRIVE-CLiQ communications error between the Control Unit and the encoder involved.
Fault value (r0949, hexadecimal):
11: CRC error and the receive telegram is too early.
01: CRC error.
12: The telegram is shorter than that specified in the length byte or in the receive list and the receive telegram is too early.
02: Telegram is shorter than specified in the length byte or in the receive list.
13: The telegram is longer than that specified in the length byte or in the receive list and the receive telegram is too early.
03: Telegram is longer than specified in the length byte or in the receive list.
14: The length of the receive telegram does not match the receive list and the receive telegram is too early.
04: The length of the receive telegram does not match the receive list.
15: The type of the receive telegram does not match the receive list and the receive telegram is too early.
05: The type of the receive telegram does not match the receive list.
16: The address of the encoder in the telegram and in the receive list does not match and the receive telegram is too early.
06: The address of the encoder in the telegram and in the receive list do not match.
19: The error bit in the receive telegram is set and the receive telegram is too early.
09: The error bit in the receive telegram is set.
10: The receive telegram is too early.

Remedy: - carry-out a POWER ON.
- check the electrical cabinet design and cable routing for EMC compliance
- check the DRIVE-CLiQ wiring (interrupted cable, contacts, ...).
See also: p9915

© Siemens AG, 2005. All rights reserved

F31885 CU DRIVE-CLiQ: Cyclic data transfer error

Reaction: A_INFEED: NONE (OFF1, OFF2)
SERVO: ENCODER (DCBRAKE, NONE)
VECTOR: ENCODER (DCBRAKE, NONE)

Acknowledge: IMMEDIATELY

Cause: DRIVE-CLiQ communications error between the Control Unit and the encoder involved. The nodes do not send and receive in synchronism.
Fault value (r0949, hexadecimal):
1A: Sign-of-life bit in the receive telegram not set and the receive telegram is too early.
21: The cyclic telegram has not been received.
22: Timeout in the telegram receive list.
40: Timeout in the telegram send list.
62: Error at the transition to cyclic operation.

Remedy: - check the power supply voltage of the component involved.
- carry-out a POWER ON.
- replace the component involved.
See also: p9915

F31886 CU DRIVE-CLiQ: Error when sending DRIVE-CLiQ data

Reaction: A_INFEED: NONE (OFF1, OFF2)
SERVO: ENCODER (DCBRAKE, NONE)
VECTOR: ENCODER (DCBRAKE, NONE)

Acknowledge: IMMEDIATELY

Cause: DRIVE-CLiQ communications error between the Control Unit and the encoder involved. Data were not able to be sent.
Fault value (r0949, hexadecimal):
41: Telegram type does not match send list.

Remedy: - carry-out a POWER ON.
- check whether the firmware version of the encoder (r0148) matches the firmware version of Control Unit (r0018).

F31887 CU DRIVE-CLiQ: Component faulted

Reaction: A_INFEED: NONE (OFF1, OFF2)
SERVO: ENCODER (DCBRAKE, NONE)
VECTOR: ENCODER (DCBRAKE, NONE)

Acknowledge: IMMEDIATELY

Cause: Fault detected on the DRIVE-CLiQ component involved. Faulty hardware cannot be excluded.
Fault value (r0949, hexadecimal):
20: Error in the telegram header.
23: Receive error: The telegram buffer memory contains an error.
42: Send error: The telegram buffer memory contains an error.
43: Send error: The telegram buffer memory contains an error.
60: Response received too late during runtime measurement.
61: Time taken to exchange characteristic data too long.

Remedy: - check the DRIVE-CLiQ wiring (interrupted cable, contacts, ...).
- check the electrical cabinet design and cable routing for EMC compliance
- if required, use another DRIVE-CLiQ socket (p9904).
- replace the component involved.

F31895 CU DRIVE-CLiQ: Cyclic data transfer error

Reaction: A_INFEED: NONE (OFF1, OFF2)
SERVO: ENCODER (DCBRAKE, NONE)
VECTOR: ENCODER (DCBRAKE, NONE)

Acknowledge: IMMEDIATELY

Cause: DRIVE-CLiQ communications error between the Control Unit and the encoder involved.
Fault value (r0949, hexadecimal):
0B: Synchronization error during alternating cyclic data transfer.

Remedy: - carry-out a POWER ON.
See also: p9915

© Siemens AG, 2005. All rights reserved

F31896 CU DRIVE-CLiQ: Inconsistent component properties

Reaction: A_INFEED: NONE (OFF1, OFF2)
SERVO: OFF2 (DCBRAKE, ENCODER, NONE, OFF1, OFF3, STOP1, STOP2)
VECTOR: OFF2 (DCBRAKE, ENCODER, NONE, OFF1, OFF3, STOP1, STOP2)

Acknowledge: IMMEDIATELY

Cause: The properties of the DRIVE-CLiQ component, specified by the fault value, have changed in an incompatible fashion with respect to the run-up. One cause can be, e.g. that a DRIVE-CLiQ cable or DRIVE-CLiQ component has been replaced.
Fault value (r0949, decimal):
Component ID.

Remedy: - when replacing cables, only use cables with the same length as the original cables.
- when replacing components, use the same components and firmware releases.
- carry-out a POWER ON.

F31897 DRIVE-CLiQ: No communications to the components

Reaction: A_INFEED: NONE (OFF1, OFF2)
SERVO: ENCODER (DCBRAKE, NONE, OFF1, OFF2, OFF3, STOP1, STOP2)
VECTOR: ENCODER (DCBRAKE, NONE, OFF1, OFF2, OFF3, STOP1, STOP2)

Acknowledge: IMMEDIATELY (POWER ON)

Cause: Communications with the DRIVE-CLiQ component specified by the fault value is not possible.
One cause can be, e.g. that a DRIVE-CLiQ cable has been withdrawn.
Fault value (r0949, decimal):
Component ID.

Remedy: - check the DRIVE-CLiQ connections.
- carry-out a POWER ON.

F31899 (N, A) Encoder 1: Unknown fault

Reaction: A_INFEED: OFF2 (DCBRAKE, NONE, OFF1, OFF3, STOP1, STOP2)
SERVO: ENCODER (DCBRAKE, NONE, OFF1, OFF2, OFF3, STOP1, STOP2)
VECTOR: ENCODER (DCBRAKE, NONE, OFF1, OFF2, OFF3, STOP1, STOP2)

Acknowledge: IMMEDIATELY (POWER ON)

Cause: A fault occurred on the Sensor Module for encoder 1 that cannot be interpreted by the Control Unit firmware.
This can occur if the firmware on the Sensor Module for encoder 1 is more recent than the firmware on the Control Unit.
Fault value (r0949, decimal):
Fault number.
If required, the significance of this new fault can be read about in a more recent description of the Control Unit.

Remedy: - replace the firmware on the Sensor Module by an older firmware version (r0148).
- upgrade the firmware on the Control Unit (r0018).

Reaction upon N: NONE

Acknowledge upon N: NONE

Reaction upon A: NONE

Acknowledge upon A: NONE

F31905 Encoder 1: Parameteriz. error

Reaction: A_INFEED: OFF2 (NONE, OFF1)
SERVO: ENCODER (DCBRAKE, NONE, OFF1, OFF2, OFF3, STOP1, STOP2)
VECTOR: ENCODER (DCBRAKE, NONE, OFF1, OFF2, OFF3, STOP1, STOP2)

Acknowledge: IMMEDIATELY

Cause: A parameter of encoder 1 was detected as being incorrect.
It is possible that the parameterized encoder type does not match the connected encoder.
The parameter involved can be determined as follows:
- determine the parameter number using the fault value (r0949).
- determine the parameter index (p0187).
Fault value (r0949, decimal):
Parameter number.

© Siemens AG, 2005. All rights reserved

Remedy: - check whether the connected encoder type matches the encoder that has been parameterized.
- correct the parameter specified by the fault value (r0949) and p0187.

A31920 (F) Encoder 1: Temperature sensor fault

Reaction: NONE

Acknowledge: NONE

Cause: When evaluating the temperature sensor, an error occurred.
Alarm value (r2124, decimal):
1: Wire breakage or sensor not connected (KTY: R > 1630 Ohm).
2: Measured resistance too low (PTC: R < 20 Ohm, KTY: R < 50 Ohm).

Remedy: - check that the encoder cable is the correct type and is correctly connected.
- check the temperature sensor selection in p0600 to p0603.
- replace the Sensor Module (hardware defect or incorrect calibration data).

Reaction upon F: A_INFEED: NONE (DCBRAKE, OFF1, OFF2, OFF3, STOP1, STOP2)
SERVO: NONE (DCBRAKE, ENCODER, OFF1, OFF2, OFF3, STOP1, STOP2)
VECTOR: NONE (DCBRAKE, ENCODER, OFF1, OFF2, OFF3, STOP1, STOP2)

Acknowledge upon F: IMMEDIATELY

A31999 (F, N) Encoder 1: Unknown alarm

Reaction: NONE

Acknowledge: NONE

Cause: A alarm has occurred on the Sensor Module for encoder 1 that cannot be interpreted by the Control Unit firmware. This can occur if the firmware on the Sensor Module for encoder 1 is more recent than the firmware on the Control Unit.
Alarm value (r2124, decimal):
Alarm number.
If required, the significance of this new alarm can be read about in a more recent description of the Control Unit.

Remedy: - replace the firmware on the Sensor Module by an older firmware version (r0148).
- upgrade the firmware on the Control Unit (r0018).

Reaction upon F: A_INFEED: NONE (DCBRAKE, OFF1, OFF2, OFF3, STOP1, STOP2)
SERVO: NONE (DCBRAKE, ENCODER, OFF1, OFF2, OFF3, STOP1, STOP2)
VECTOR: NONE (DCBRAKE, ENCODER, OFF1, OFF2, OFF3, STOP1, STOP2)

Acknowledge upon F: IMMEDIATELY (POWER ON)

Reaction upon N: NONE

Acknowledge upon N: NONE

F32100 Encoder 2: Zero mark clearance error

Reaction: A_INFEED: NONE (DCBRAKE, OFF1, OFF2, OFF3, STOP1, STOP2)
SERVO: ENCODER (DCBRAKE, NONE, OFF1, OFF2, OFF3, STOP1, STOP2)
VECTOR: ENCODER (DCBRAKE, NONE, OFF1, OFF2, OFF3, STOP1, STOP2)

Acknowledge: READY

Cause: The measured zero mark clearance does not correspond to the parameterized zero mark clearance.
For distance-coded encoders, the zero mark distance is determined from zero marks detected pairs. This means that if a zero mark is missing, depending on the pair generation, this cannot result in a fault and also has no effect in the system.
The zero mark clearance for the zero mark monitoring is set in p0425 (rotary encoder) or p0424 (linear encoder).
Fault value (r0949, decimal):
Last measured zero mark clearance in increments (4 increments = 1 encoder pulse).
The sign designates the direction of motion when detecting the zero mark clearance (distance).

Remedy: - check that the encoder cables are routed in compliance with EMC.
- check the plug connections.
. check the encoder type (encoder with equidistant zero marks).
- adapt the parameter for the distance between zero marks (p0424, p0425).
- replace the encoder or encoder cable.

© Siemens AG, 2005. All rights reserved

F32101 Encoder 2: Zero mark failed

Reaction: A_INFEED: NONE (DCBRAKE, OFF1, OFF2, OFF3, STOP1, STOP2)
SERVO: ENCODER (DCBRAKE, NONE, OFF1, OFF2, OFF3, STOP1, STOP2)
VECTOR: ENCODER (DCBRAKE, NONE, OFF1, OFF2, OFF3, STOP1, STOP2)

Acknowledge: READY

Cause: The 1.5 x parameterized zero mark distance was exceeded.
The zero mark clearance for the zero mark monitoring is set in p0425 (rotary encoder) or p0424 (linear encoder).
Fault value (r0949, decimal):
Number of increments after POWER ON or since the last zero mark that was detected (4 increments = 1 encoder pulse).

Remedy: - check that the encoder cables are routed in compliance with EMC.
- check the plug connections.
. check the encoder type (encoder with equidistant zero marks).
- adapt the parameter for the clearance between zero marks (p0425).
- replace the encoder or encoder cable.

F32110 Encoder 2: EnDat communications error

Reaction: A_INFEED: NONE
SERVO: ENCODER (DCBRAKE, NONE)
VECTOR: ENCODER (DCBRAKE, NONE)

Acknowledge: READY

Cause: Serial communication protocol transfer error between the encoder and evaluation module SMCxx.
Fault value (r0949, binary):
Bit 0: Alarm bit in the position protocol.
Bit 1: Incorrect quiescent level on the data line.
Bit 2: EnDat encoder does not respond (does not supply a start bit within 50 ms).
Bit 3: CRC error: The checksum in the protocol from the encoder does not match the data.
Bit 4: Incorrect encoder acknowledgement: The encoder incorrectly understood the task (request) or cannot execute it.
Bit 5: Internal error in the EnDat driver: An illegal mode command was requested.
Bit 6: Timeout with cyclically reading.

Remedy: Re fault value:
Bit 0 = 1: Encoder defective. F31111 may provide additional details.
Bit 1 = 1: Incorrect encoder type / replace the encoder or encoder cable.
Bit 2 = 1: Incorrect encoder type / replace the encoder or encoder cable.
Bit 3 = 1: EMC / connect the cable shield, replace the encoder or encoder cable.
Bit 4 = 1: EMC / connect the cable shield, replace the encoder or encoder cable, replace the Sensor Module.
Bit 5 = 1: EMC / connect the cable shield, replace the encoder or encoder cable, replace the Sensor Module.
Bit 6 = 1: Update the Sensor Module firmware.

F32111 (A) Encoder 2: Absolute value encoder EnDat, internal fault/error

Reaction: A_INFEED: NONE
SERVO: ENCODER (DCBRAKE, NONE)
VECTOR: ENCODER (DCBRAKE, NONE)

Acknowledge: READY

Cause: The EnDat encoder fault word contains fault bits that have been set.
Fault value (r0949, binary):
Bit 0: Lighting system failed.
Bit 1: Signal amplitude too low.
Bit 2: Position value incorrect.
Bit 3: Encoder power supply overvoltage condition.
Bit 4: Encoder power supply undervoltage condition.
Bit 5: Encoder power supply overcurrent condition.
Bit 6: The battery must be changed.

© Siemens AG, 2005. All rights reserved

Remedy: Re fault value, bit 0 = 1:
Encoder is defective. Replace the encoder, where the motor encoder has a direct DRIVE-CLiQ socket: Replace the motor.
Re fault value, bit 1 = 1:
Encoder is defective. Replace the encoder, where the motor encoder has a direct DRIVE-CLiQ socket: Replace the motor.
Re fault value, bit 2 = 1:
Encoder is defective. Replace the encoder, where the motor encoder has a direct DRIVE-CLiQ socket: Replace the motor.
Re fault value, bit 3 = 1:
5 V power supply voltage fault.
When using an SMC. Check the plug-in cable between the encoder and SMC or replace the SMC.
When a motor encoder with a direct DRIVE-CLiQ connection is used: Replace the motor.
Re fault value, bit 4 = 1:
5 V power supply voltage fault.
When using an SMC. Check the plug-in cable between the encoder and SMC or replace the SMC.
When using a motor with DRIVE-CLiQ: Replace the motor.
Re fault value, bit 5 = 1:
Encoder is defective. Replace the encoder, where the motor encoder has a direct DRIVE-CLiQ socket: Replace the motor.
Re fault value, bit 6 = 1:
The battery must be changed - only for encoders with battery back-up.

Reaction upon A: NONE

Acknowledge upon A: NONE

F32115 Encoder 2: Amplitude error track A or B (A^2 + B^2)

Reaction: A_INFEED: NONE
SERVO: ENCODER (DCBRAKE, NONE)
VECTOR: ENCODER (DCBRAKE, NONE)

Acknowledge: READY

Cause: SMC20:
The nominal signal level of the encoder must lie in the range 375 mV to 600 mV (500 mV -25 % / +20 %).
On the other hand, the response thresholds are < 230 mV and > 750 mV (frequency characteristic).
SMC10:
The nominal signal level is at 2900 mV (2.0 Vrms). The response thresholds are at < 1070 mV and > 3535 mV.
Fault value (r0949, decimal):
Low word:
Signal level, track A (16 bits with sign).
High word:
Signal level, track B (16 bits with sign).
SMC20:
A signal level of 500 mV peak value corresponds to the numerical value 5333 hex = 21299 dec.
SMC10:
A signal level of 2900 mV peak value corresponds to the numerical value 6666 hex = 26214 dec.

Remedy: - check that the encoder cables are routed in compliance with EMC.
- check the plug connections.
- replace the encoder or encoder cable.
- check the encoder module (e.g. contacts).

© Siemens AG, 2005. All rights reserved

F32116 Encoder 2: Amplitude error, monitoring track A + B

Reaction: A_INFEED: NONE
SERVO: ENCODER (DCBRAKE, NONE)
VECTOR: ENCODER (DCBRAKE, NONE)

Acknowledge: IMMEDIATELY

Cause: The amplitude of the rectified encoder signals A and B is not within the tolerance bandwidth (hardware monitoring).
The nominal signal level of the encoder must lie in the range 375 mV to 600 mV (500 mV -25 % / +20 %).
On the other hand, the hardware response thresholds are at < 176 mV and > 1.35 V.
Fault value (r0949, decimal):
Low word: Signal level, track A (16 bits with sign).
High word: Signal level, track B (16 bits with sign).
A signal level of 500 mV corresponds to the numerical value 5333 hex = 21299 dec.
These analog values are not measured at the same time with the hardware fault output.

Remedy: - check that the encoder cables are routed in compliance with EMC.
- check the plug connections.
- replace the encoder or encoder cable.
- check the encoder module (e.g. contacts).

F32117 Encoder 2: Inversion error, signals A and B

Reaction: A_INFEED: NONE
SERVO: ENCODER (DCBRAKE, NONE)
VECTOR: ENCODER (DCBRAKE, NONE)

Acknowledge: IMMEDIATELY

Cause: For a square-wave signal encoder (TTL. bipolar. double ended) the A* and B* signals are not inverted with respect to signals A and B.

Remedy: Check the setting of p0405: p0405.2 = 1 is only possible if the encoder is connected at X520.
Check the encoder/cable: Does the encoder supply TTL signals and the associated inverted signals?

F32118 Encoder 2: Speed difference outside the tolerance range

Reaction: A_INFEED: NONE
SERVO: ENCODER (DCBRAKE, NONE)
VECTOR: ENCODER (DCBRAKE, NONE)

Acknowledge: READY

Cause: For an HTL/TTL encoder, the speed difference between two sampling cycles has exceeded the value in p0492.
Fault value (r0949, decimal):
Only for internal Siemens troubleshooting.

Remedy: - check the tachometer feeder cable for interruptions.
- check the grounding of the tachometer shielding.
- if required, increase the maximum speed difference per sampling cycle (p0492).

F32120 Encoder 2: Power supply volt.

Reaction: A_INFEED: NONE
SERVO: ENCODER (DCBRAKE, NONE)
VECTOR: ENCODER (DCBRAKE, NONE)

Acknowledge: READY

Cause: Encoder power supply voltage fault.
Note:
If the encoder cables 6FX2002-2EQ00-.... and 6FX2002-2CH00-.... are interchanged, this can result in the encoder being destroyed because the pins of the operating voltage are reversed.
Fault value (r0949, binary):
Bit 0: Undervoltage condition on the sense line (threshold 4.75 V).
Bit 1: Encoder power supply voltage overcurrent condition (threshold 450 mA).

Remedy: For fault value, bit 0 = 1:
- correct encoder cable connected?
- check the plug connections of the encoder cable.
- SMC30: Check the parameterization (p0404.22).
For fault value, bit 1 = 1:
- correct encoder cable connected?
- replace the encoder or encoder cable.

© Siemens AG, 2005. All rights reserved

F32121 (N) Encoder 2: Coarse position incorrect

Reaction: A_INFEED: NONE
SERVO: ENCODER (NONE)
VECTOR: ENCODER (NONE)

Acknowledge: READY

Cause: For the actual value sensing, an error was detected on the module. As a result of this error, it must be assumed that the actual value sensing supplies an incorrect coarse position.

Remedy: Replace the motor with DRIVE-CLiQ or the appropriate Sensor Module.

Reaction upon N: NONE

Acknowledge upon N: NONE

F32129 (N) Encoder 2: Position difference, hall sensor/track C/D and A/B too large

Reaction: A_INFEED: NONE
SERVO: ENCODER (DCBRAKE, NONE)
VECTOR: ENCODER (DCBRAKE, NONE)

Acknowledge: READY

Cause: The error of track C/D is greater than +/-15 ° mechanical or +/-60 ° electrical.
One period of track C/D corresponds to 360 ° mechanical.
One period of the Hall signal corresponds to 360 ° electrical.
The monitoring responds if, for example, Hall sensors are connected as equivalent for the C/D tracks with the incorrect rotational sense or supply values that are not accurate enough.
After the fine synchronization using one reference mark or 2 reference marks for distance-coded encoders, this fault is no longer initiated, but instead, Alarm A32429.
Fault value (r0949, decimal):
Measured deviation as mechanical angle (16 bits with sign, 182 dec corresponds to 1 °).

Remedy: - track C or D not connected.
- correct the direction of rotation of the Hall sensor possibly connected as equivalent for track C/D.
- check that the encoder cables are routed in compliance with EMC.
- check the adjustment of the Hall sensor.

Reaction upon N: NONE

Acknowledge upon N: NONE

F32130 Encoder 2: Zero mark and position from the coarse synchronization are incorrect

Reaction: A_INFEED: NONE
SERVO: ENCODER (DCBRAKE, NONE, OFF1, OFF2, OFF3, STOP1, STOP2)
VECTOR: ENCODER (DCBRAKE, NONE, OFF1, OFF2, OFF3, STOP1, STOP2)

Acknowledge: READY

Cause: After initializing the pole position using track C/D, Hall signals or pole position identification routine, the zero mark was detected outside the permissible range. For distance-coded encoders, the test is carried-out after passing 2 zero marks. Fine synchronization was not carried-out.
The deviation may be up to 18 ° mechanical or up to 60 ° electrical.
Fault value (r0949, decimal):
Normalization: 32768 = 180 °
High word:
Mechanical zero mark position determined.
If the initialization via a track C/D is selected in p0404, then it is checked whether the zero mark occurs in an angular range of +/-18 ° mechanical.
Low word:
Deviation of the zero mark from the expected position as electrical angle.
If the correction of the commutation position with the zero mark is selected in p0404, then a difference of a maximum of +/- 60 ° electrical is permitted.

Remedy: - check that the encoder cables are routed in compliance with EMC.
- check the plug connections.
- if the Hall sensor is used as an equivalent for track C/D, check the connection.
- check the connection of track C or D.
- replace the encoder or encoder cable.

© Siemens AG, 2005. All rights reserved

F32131 Encoder 2: Deviation, position incremental/absolute too large

Reaction: A_INFEED: NONE
SERVO: ENCODER (DCBRAKE, NONE, OFF1, OFF2, OFF3, STOP1, STOP2)
VECTOR: ENCODER (DCBRAKE, NONE, OFF1, OFF2, OFF3, STOP1, STOP2)

Acknowledge: READY

Cause: When cyclically reading the absolute position, an excessively high deviation to the incremental position was detected. The absolute position that was read is rejected.
Limit value for the deviation:
- EnDat encoder: Is supplied from the encoder and is a minimum of 2 quadrants (e.g. EQI 1325 > 2 quadrants, EQN 1325 > 50 quadrants).
- other encoders: 15 pulses = 60 quadrants.
Fault value (r0949, decimal):
Deviation in quadrants (1 pulse = 4 quadrants).

Remedy: - check that the encoder cables are routed in compliance with EMC.
- check the plug connections.
- replace the encoder or encoder cable.
- check whether the coding disk is dirty or there are strong ambient magnetic fields.

F32150 Encoder 2: Initialization error

Reaction: A_INFEED: NONE
SERVO: ENCODER (DCBRAKE, NONE, OFF1, OFF2, OFF3, STOP1, STOP2)
VECTOR: ENCODER (DCBRAKE, NONE, OFF1, OFF2, OFF3, STOP1, STOP2)

Acknowledge: READY

Cause: Encoder functionality selected in p0404 is not operating correctly.
Fault value (r0949, hexadecimal):
The fault value is a bit field. Every set bit indicates functionality that is faulted.
The bit assignment corresponds to that of p0404 (e.g. bit 5 set: Error track C/D).

Remedy: - Check that p0404 is correctly set.
- check the encoder type used (incremental/absolute value) and for SMCxx, the encoder cable.
- if relevant, note additional fault/error messages that describe the fault in detail.

F32405 (N, A) Encoder 2: Encoder evaluation temperature too high

Reaction: NONE (DCBRAKE, OFF1, OFF2, OFF3, STOP1, STOP2)

Acknowledge: IMMEDIATELY (POWER ON)

Cause: The encoder evaluation for a motor with DRIVE-CLiQ has detected an excessively high temperature.
The fault threshold is 125 ° C.
Alarm value (r2124, decimal):
Measured board/module temperature in 0.1 °C.

Remedy: Reduce the ambient temperature for the DRIVE-CLiQ connection of the motor.

Reaction upon N: NONE

Acknowledge upon N: NONE

Reaction upon A: NONE

Acknowledge upon A: NONE

A32410 (F, N) Encoder 2: Serial communications

Reaction: NONE

Acknowledge: NONE

Cause: Serial communication protocol transfer error between the encoder and evaluation module SMCxx.
Alarm value (r2124, binary):
Bit 0: Alarm bit in the position protocol.
Bit 1: Incorrect quiescent level on the data line.
Bit 2: EnDat encoder does not respond (does not supply a start bit).
Bit 3: CRC error: The checksum in the protocol from the encoder does not match the data.
Bit 4: Incorrect encoder acknowledgement: The encoder incorrectly understood the task (request) or cannot execute it.
Bit 5: Internal error in the EnDat driver: An illegal mode command was requested.
Bit 6: Position value longer than 40 bits.

© Siemens AG, 2005. All rights reserved

Remedy: - check that the encoder cables are routed in compliance with EMC.
- check the plug connections.
- replace the encoder.

Reaction upon F: A_INFEED: NONE
SERVO: NONE (DCBRAKE, ENCODER, OFF1, OFF2, OFF3, STOP1, STOP2)
VECTOR: NONE (DCBRAKE, ENCODER, OFF1, OFF2, OFF3, STOP1, STOP2)

Acknowledge upon F: IMMEDIATELY

Reaction upon N: NONE

Acknowledge upon N: NONE

A32411 (F, N) Encoder 2: EnDat encoder signals alarms

Reaction: NONE

Acknowledge: NONE

Cause: The error word of the EnDat encoder has alarm bits that have been set.
Alarm value (r2124, binary):
Bit 0: Frequency exceeded (speed too high).
Bit 1: Temperature exceeded.
Bit 2: Control reserve, lighting system exceeded.
Bit 3: Battery discharged.
Bit 4: Reference point passed.

Remedy: Replace encoder.

Reaction upon F: A_INFEED: NONE (DCBRAKE, OFF1, OFF2, OFF3, STOP1, STOP2)
SERVO: NONE (DCBRAKE, ENCODER, OFF1, OFF2, OFF3, STOP1, STOP2)
VECTOR: NONE (DCBRAKE, ENCODER, OFF1, OFF2, OFF3, STOP1, STOP2)

Acknowledge upon F: IMMEDIATELY

Reaction upon N: NONE

Acknowledge upon N: NONE

A32414 (F, N) Encoder 2: Amplitude error track C or D (C^2 + D^2)

Reaction: NONE

Acknowledge: NONE

Cause: The amplitude (C^2 + D^2) of track C or D of the encoder or from the Hall signals, is not within the tolerance bandwidth.
The nominal signal must be in the range 375 mV to 600 mV (500 mV -25 % / +20 %).
On the other hand, the response thresholds are < 230 mV and > 750 mV (frequency characteristic).
This fault also occurs if the A/D converter is overcontrolled.
If the amplitude is not within the tolerance bandwidth, then it cannot be used to initialize the start position.
Alarm value (r2124, decimal):
Low word: Signal level, track C (16 bits with sign).
High word: Signal level, track D (16 bits with sign).
A signal level of 500 mV corresponds to the numerical value 5333 hex = 21299 dec.

Remedy: - check that the encoder cables are routed in compliance with EMC.
- check the plug connections.
- replace the encoder or encoder cable.
- check the encoder module (e.g. contacts).
- check the Hall sensor box

Reaction upon F: A_INFEED: NONE (DCBRAKE, OFF1, OFF2, OFF3, STOP1, STOP2)
SERVO: NONE (DCBRAKE, ENCODER, OFF1, OFF2, OFF3, STOP1, STOP2)
VECTOR: NONE (DCBRAKE, ENCODER, OFF1, OFF2, OFF3, STOP1, STOP2)

Acknowledge upon F: IMMEDIATELY

Reaction upon N: NONE

Acknowledge upon N: NONE

© Siemens AG, 2005. All rights reserved

N32415 (F, A) Encoder 2: Amplitude alarm, track A or B (A^2 + B^2)

Reaction: NONE

Acknowledge: NONE

Cause: The amplitude (A^2 + B^2) of track A or B is not within the tolerance bandwidth.
SMC20:
The nominal signal level is at 500 mV (500 mV -25 % / +20 %). The response threshold is < 300 mV.
SMC10:
The nominal signal level is at 2900 mV (2.0 Vrms). The response threshold is < 1414 mV (1.0 Vrms).
Alarm value (r2124, decimal):
Low word:
Amplitude square root(A*A + B*B).
SMC20:
A signal level of 500 mV peak value corresponds to the numerical value 299A hex = 10650 dec.
SMC10:
A signal level of 2900 mV peak value corresponds to the numerical value 3333 hex = 13107 dec.
High word:
Angle 0 to 65535 corresponds to 0 to 360 degrees of the fine position. Zero degrees is at the negative zero crossover of track B.

Remedy: - check the speed range, frequency characteristic (amplitude characteristic) of the measuring equipment is not sufficient for the speed range.
- check that the encoder cables are routed in compliance with EMC.
- check the plug connections.
- replace the encoder or encoder cable.
- check the encoder module (e.g. contacts).
- dirty code disk
- aged lighting system.

Reaction upon F: A_INFEED: NONE (DCBRAKE, OFF1, OFF2, OFF3, STOP1, STOP2)
SERVO: NONE (DCBRAKE, ENCODER, OFF1, OFF2, OFF3, STOP1, STOP2)
VECTOR: NONE (DCBRAKE, ENCODER, OFF1, OFF2, OFF3, STOP1, STOP2)

Acknowledge upon F: IMMEDIATELY

Reaction upon A: NONE

Acknowledge upon A: NONE

A32418 (F, N) Encoder 2: Speed difference per sampling rated exceeded

Reaction: NONE

Acknowledge: NONE

Cause: For an HTL/TTL encoder, the speed difference between two sampling cycles has exceeded the value in p0492.
Alarm value (r2124, decimal):
Only for internal Siemens troubleshooting.

Remedy: - check the tachometer feeder cable for interruptions.
- check the grounding of the tachometer shielding.
- if required, increase the setting of p0492.

Reaction upon F: NONE (DCBRAKE, OFF1, OFF2, OFF3, STOP1, STOP2)

Acknowledge upon F: IMMEDIATELY

Reaction upon N: NONE

Acknowledge upon N: NONE

© Siemens AG, 2005. All rights reserved

A32419 (F, N) Encoder 2: Track A or B outside the tolerance range

Reaction: NONE

Acknowledge: NONE

Cause: The amplitude, phase or offset correction for track A or B is at the limit.
Amplitude error correction: Amplitude B / Amplitude A = 0.78 ... 1.27
Phase: <84 degrees or >96 degrees
SMC20: Offset correction: +/-140 mV
SMC10: Offset correction: +/-650 mV
Alarm value (r2124, hexadecimal):
xxx1: Minimum of the offset correction, track B
xxx2: Maximum of the offset correction, track B
xx1x: Minimum of the offset correction, track A
xx2x: Maximum of the offset correction, track A
x1xx: Minimum of the amplitude correction, track B/A
x2xx: Maximum of the amplitude correction, track B/A
1xxx: Minimum of the phase error correction
2xxx: Maximum of the phase error correction

Remedy: - check mechanical mounting tolerances for encoders without their own bearings (e.g. toothed-wheel encoders).
- check the plug connections (also the transition resistance).
- check the encoder signals.
- replace the encoder or encoder cable.

Reaction upon F: A_INFEED: NONE (DCBRAKE, OFF1, OFF2, OFF3, STOP1, STOP2)
SERVO: NONE (DCBRAKE, ENCODER, OFF1, OFF2, OFF3, STOP1, STOP2)
VECTOR: NONE (DCBRAKE, ENCODER, OFF1, OFF2, OFF3, STOP1, STOP2)

Acknowledge upon F: IMMEDIATELY

Reaction upon N: NONE

Acknowledge upon N: NONE

A32429 (F, N) Encoder 2: Position difference, hall sensor/track C/D and A/B too large

Reaction: NONE

Acknowledge: NONE

Cause: The error of track C/D is greater than +/-15 ° mechanical or +/-60 ° electrical.
One period of track C/D corresponds to 360 ° mechanical.
One period of the Hall signal corresponds to 360 ° electrical.
The monitoring responds if, for example, Hall sensors are connected as equivalent for the C/D tracks with the incorrect rotational sense or supply values that are not accurate enough.
Alarm value (r2124, decimal):
Measured deviation as mechanical angle (16 bits with sign, 182 dec corresponds to 1 °).

Remedy: - track C or D not connected.
- correct the direction of rotation of the Hall sensor possibly connected as equivalent for track C/D.
- check that the encoder cables are routed in compliance with EMC.
- check the adjustment of the Hall sensor.

Reaction upon F: A_INFEED: NONE (DCBRAKE, OFF1, OFF2, OFF3, STOP1, STOP2)
SERVO: NONE (DCBRAKE, ENCODER, OFF1, OFF2, OFF3, STOP1, STOP2)
VECTOR: NONE (DCBRAKE, ENCODER, OFF1, OFF2, OFF3, STOP1, STOP2)

Acknowledge upon F: IMMEDIATELY

Reaction upon N: NONE

Acknowledge upon N: NONE

© Siemens AG, 2005. All rights reserved

F32801 **Encoder 2 DRIVE-CLiQ: Sign-of-life missing**

Reaction: A_INFEED: OFF2 (NONE)
SERVO: ENCODER (DCBRAKE, NONE)
VECTOR: ENCODER (DCBRAKE, NONE)

Acknowledge: IMMEDIATELY

Cause: DRIVE-CLiQ communications error between the Control Unit and the encoder involved.
Fault value (r0949, hexadecimal):
0A: The sign-of-life bit in the receive telegram is not set.

Remedy: - check the electrical cabinet design and cable routing for EMC compliance
- replace the component involved.
See also: p9916

F32802 **Encoder 2: Time slice overflow**

Reaction: A_INFEED: OFF2 (NONE)
SERVO: ENCODER (DCBRAKE, NONE)
VECTOR: ENCODER (DCBRAKE, NONE)

Acknowledge: IMMEDIATELY

Cause: Time slice overflow, encoder 2.
Fault value (r0949, decimal):
9: Time slice overflow of the fast (current controller clock cycle) time slice.
10: Time slice overflow of the average time slice.
12: Time slice overflow of the slow time slice.
999: Timeout when waiting for SYNO, e.g. unexpected return to non-cyclic operation.

Remedy: Reduce the current controller frequency.

F32804 **Encoder 2: CRC CODE RAM**

Reaction: A_INFEED: OFF2 (NONE)
SERVO: ENCODER (DCBRAKE, NONE)
VECTOR: ENCODER (DCBRAKE, NONE)

Acknowledge: IMMEDIATELY

Cause: The checksum via the CODE-RAM of the Sensor Module has changed in operation.
Fault value (r0949, hexadecimal):
Difference between the checksum at POWER ON and the actual checksum.

Remedy: Hardware defect: Replace the Sensor Module.
Firmware error: If required, upgrade the firmware.

F32805 **Encoder 2: Incorrect EPROM checksum**

Reaction: A_INFEED: OFF2 (NONE)
SERVO: ENCODER (DCBRAKE, NONE)
VECTOR: ENCODER (DCBRAKE, NONE)

Acknowledge: IMMEDIATELY

Cause: Internal parameter data is corrupted.
Fault value (r0949, hexadecimal):
01: EEPROM access error.
02: Too many blocks in the EEPROM.

Remedy: Replace the module.

F32806 **Encoder 2: Initialization unsuccessful**

Reaction: A_INFEED: OFF2 (NONE)
SERVO: ENCODER (DCBRAKE, NONE)
VECTOR: ENCODER (DCBRAKE, NONE)

Acknowledge: READY

Cause: The encoder was not successfully initialized.
Fault value (r0949, hexadecimal):
1, 2, 3: Encode initialization with the motor rotating.

Remedy: Acknowledge the fault.

© Siemens AG, 2005. All rights reserved

F32820 Encoder 2 DRIVE-CLiQ: Telegram error

Reaction: A_INFEED: OFF2
SERVO: ENCODER (DCBRAKE, NONE)
VECTOR: ENCODER (DCBRAKE, NONE)

Acknowledge: IMMEDIATELY

Cause: DRIVE-CLiQ communications error between the Control Unit and the encoder involved.
Fault value (r0949, hexadecimal):
01: CRC error.
02: Telegram is shorter than specified in the length byte or in the receive list.
03: Telegram is longer than specified in the length byte or in the receive list.
04: The length of the receive telegram does not match the receive list.
05: The type of the receive telegram does not match the receive list.
06: The address of the encoder in the telegram and in the receive list do not match.
07: The encoder expects a SYNC telegram, but the receive telegram is not a SYNC telegram.
08: The encoder does not expect a SYNC telegram, but the receive telegram is a SYNC telegram.
09: The error bit in the receive telegram is set.
10: The receive telegram is too early.

Remedy: - carry-out a POWER ON.
- check the electrical cabinet design and cable routing for EMC compliance
- check the DRIVE-CLiQ wiring (interrupted cable, contacts, ...).
See also: p9916

F32835 Encoder 2 DRIVE-CLiQ: Cyclic data transfer error

Reaction: A_INFEED: OFF2
SERVO: ENCODER (DCBRAKE, NONE)
VECTOR: ENCODER (DCBRAKE, NONE)

Acknowledge: IMMEDIATELY

Cause: DRIVE-CLiQ communications error between the Control Unit and the encoder involved. The nodes do not send and receive in synchronism.
Fault value (r0949, hexadecimal):
21: The cyclic telegram has not been received.
22: Timeout in the telegram receive list.
40: Timeout in the telegram send list.

Remedy: - carry-out a POWER ON.
- replace the component involved.
See also: p9916

F32836 Encoder 2 DRIVE-CLiQ: Send error for DRIVE-CLiQ data

Reaction: A_INFEED: OFF2
SERVO: ENCODER (DCBRAKE, NONE)
VECTOR: ENCODER (DCBRAKE, NONE)

Acknowledge: IMMEDIATELY

Cause: DRIVE-CLiQ communications error between the Control Unit and the encoder involved. Data were not able to be sent.
Fault value (r0949, hexadecimal):
41: Telegram type does not match send list.

Remedy: - carry-out a POWER ON.

F32837 Encoder 2 DRIVE-CLiQ: Component faulted

Reaction: A_INFEED: OFF2
SERVO: ENCODER (DCBRAKE, NONE)
VECTOR: ENCODER (DCBRAKE, NONE)

Acknowledge: IMMEDIATELY

Cause: Fault detected on the DRIVE-CLiQ component involved. Faulty hardware cannot be excluded.
Fault value (r0949, hexadecimal):
20: Error in the telegram header.
23: Receive error: The telegram buffer memory contains an error.
42: Send error: The telegram buffer memory contains an error.
43: Send error: The telegram buffer memory contains an error.

© Siemens AG, 2005. All rights reserved

Remedy: - check the DRIVE-CLiQ wiring (interrupted cable, contacts, ...).
- check the electrical cabinet design and cable routing for EMC compliance
- if required, use another DRIVE-CLiQ socket (p9904).
- replace the component involved.

F32845 Encoder 2 DRIVE-CLiQ: Cyclic data transfer error

Reaction: A_INFEED: OFF2
SERVO: ENCODER (DCBRAKE, NONE)
VECTOR: ENCODER (DCBRAKE, NONE)

Acknowledge: IMMEDIATELY

Cause: DRIVE-CLiQ communications error between the Control Unit and the encoder involved.
Fault value (r0949, hexadecimal):
0B: Synchronization error during alternating cyclic data transfer.

Remedy: Carry-out a POWER ON.
See also: p9916

F32850 Encoder 2: Sensor Module, internal software error

Reaction: A_INFEED: OFF2 (NONE)
SERVO: ENCODER (DCBRAKE, NONE)
VECTOR: ENCODER (DCBRAKE, NONE)

Acknowledge: POWER ON

Cause: Internal software error in the Sensor Module of encoder 2.
Fault value (r0949, decimal):
1: Background time slice is blocked.
2: Checksum over the code memory is not OK.
10000: OEM memory of the EnDat encoder contains data that cannot be interpreted.

Remedy: - replace the Sensor Module.
- if required, upgrade the firmware in the Sensor Module.
- contact the Hotline.

F32851 CU DRIVE-CLiQ: Sign-of-life missing

Reaction: A_INFEED: NONE (OFF1, OFF2)
SERVO: ENCODER (DCBRAKE, NONE)
VECTOR: ENCODER (DCBRAKE, NONE)

Acknowledge: IMMEDIATELY

Cause: A DRIVE-CLiQ communications error has occurred between the Control Unit and the power module involved. The DRIVE-CLiQ component did not set the sign of life to the Control Unit.
Fault value (r0949, hexadecimal):
0A: The sign-of-life bit in the receive telegram is not set.

Remedy: - upgrade the firmware of the component involved.

© Siemens AG, 2005. All rights reserved

F32860 CU DRIVE-CLiQ: Telegram error

Reaction: A_INFEED: NONE (OFF1, OFF2)
SERVO: ENCODER (DCBRAKE, NONE)
VECTOR: ENCODER (DCBRAKE, NONE)

Acknowledge: IMMEDIATELY

Cause: DRIVE-CLiQ communications error between the Control Unit and the encoder involved.
Fault value (r0949, hexadecimal):
11: CRC error and the receive telegram is too early.
01: CRC error.
12: The telegram is shorter than that specified in the length byte or in the receive list and the receive telegram is too early.
02: Telegram is shorter than specified in the length byte or in the receive list.
13: The telegram is longer than that specified in the length byte or in the receive list and the receive telegram is too early.
03: Telegram is longer than specified in the length byte or in the receive list.
14: The length of the receive telegram does not match the receive list and the receive telegram is too early.
04: The length of the receive telegram does not match the receive list.
15: The type of the receive telegram does not match the receive list and the receive telegram is too early.
05: The type of the receive telegram does not match the receive list.
16: The address of the encoder in the telegram and in the receive list does not match and the receive telegram is too early.
06: The address of the encoder in the telegram and in the receive list do not match.
19: The error bit in the receive telegram is set and the receive telegram is too early.
09: The error bit in the receive telegram is set.
10: The receive telegram is too early.

Remedy: - carry-out a POWER ON.
- check the electrical cabinet design and cable routing for EMC compliance
- check the DRIVE-CLiQ wiring (interrupted cable, contacts, ...).
See also: p9915

F32885 CU DRIVE-CLiQ: Cyclic data transfer error

Reaction: A_INFEED: NONE (OFF1, OFF2)
SERVO: ENCODER (DCBRAKE, NONE)
VECTOR: ENCODER (DCBRAKE, NONE)

Acknowledge: IMMEDIATELY

Cause: DRIVE-CLiQ communications error between the Control Unit and the encoder involved. The nodes do not send and receive in synchronism.
Fault value (r0949, hexadecimal):
1A: Sign-of-life bit in the receive telegram not set and the receive telegram is too early.
21: The cyclic telegram has not been received.
22: Timeout in the telegram receive list.
40: Timeout in the telegram send list.
62: Error at the transition to cyclic operation.

Remedy: - check the power supply voltage of the component involved.
- carry-out a POWER ON.
- replace the component involved.
See also: p9915

F32886 CU DRIVE-CLiQ: Error when sending DRIVE-CLiQ data

Reaction: A_INFEED: NONE (OFF1, OFF2)
SERVO: ENCODER (DCBRAKE, NONE)
VECTOR: ENCODER (DCBRAKE, NONE)

Acknowledge: IMMEDIATELY

Cause: DRIVE-CLiQ communications error between the Control Unit and the encoder involved. Data were not able to be sent.
Fault value (r0949, hexadecimal):
41: Telegram type does not match send list.

Remedy: - carry-out a POWER ON.

© Siemens AG, 2005. All rights reserved

F32887 CU DRIVE-CLiQ: Component faulted

Reaction: A_INFEED: NONE (OFF1, OFF2)
SERVO: ENCODER (DCBRAKE, NONE)
VECTOR: ENCODER (DCBRAKE, NONE)

Acknowledge: IMMEDIATELY

Cause: Fault detected on the DRIVE-CLiQ component involved. Faulty hardware cannot be excluded.
Fault value (r0949, hexadecimal):
20: Error in the telegram header.
23: Receive error: The telegram buffer memory contains an error.
42: Send error: The telegram buffer memory contains an error.
43: Send error: The telegram buffer memory contains an error.
60: Response received too late during runtime measurement.
61: Time taken to exchange characteristic data too long.

Remedy: - check the DRIVE-CLiQ wiring (interrupted cable, contacts, ...).
- check the electrical cabinet design and cable routing for EMC compliance
- if required, use another DRIVE-CLiQ socket (p9904).
- replace the component involved.

F32895 CU DRIVE-CLiQ: Cyclic data transfer error

Reaction: A_INFEED: NONE (OFF1, OFF2)
SERVO: ENCODER (DCBRAKE, NONE)
VECTOR: ENCODER (DCBRAKE, NONE)

Acknowledge: IMMEDIATELY

Cause: DRIVE-CLiQ communications error between the Control Unit and the encoder involved.
Fault value (r0949, hexadecimal):
0B: Synchronization error during alternating cyclic data transfer.

Remedy: - carry-out a POWER ON.
See also: p9915

F32896 CU DRIVE-CLiQ: Inconsistent component properties

Reaction: A_INFEED: NONE (OFF1, OFF2)
SERVO: OFF2 (DCBRAKE, ENCODER, NONE, OFF1, OFF3, STOP1, STOP2)
VECTOR: OFF2 (DCBRAKE, ENCODER, NONE, OFF1, OFF3, STOP1, STOP2)

Acknowledge: IMMEDIATELY

Cause: The properties of the DRIVE-CLiQ component, specified by the fault value, have changed in an incompatible fashion with respect to the run-up. One cause can be, e.g. that a DRIVE-CLiQ cable or DRIVE-CLiQ component has been replaced.
Fault value (r0949, decimal):
Component ID.

Remedy: - when replacing cables, only use cables with the same length as the original cables.
- when replacing components, use the same components and firmware releases.
- carry-out a POWER ON.

F32897 DRIVE-CLiQ: No communications to the components

Reaction: A_INFEED: NONE (OFF1, OFF2)
SERVO: ENCODER (DCBRAKE, NONE, OFF1, OFF2, OFF3, STOP1, STOP2)
VECTOR: ENCODER (DCBRAKE, NONE, OFF1, OFF2, OFF3, STOP1, STOP2)

Acknowledge: IMMEDIATELY (POWER ON)

Cause: Communications with the DRIVE-CLiQ component specified by the fault value is not possible.
One cause can be, e.g. that a DRIVE-CLiQ cable has been withdrawn.
Fault value (r0949, decimal):
Component ID.

Remedy: - check the DRIVE-CLiQ connections.
- carry-out a POWER ON.

© Siemens AG, 2005. All rights reserved

F32899 (N, A) Encoder 2: Unknown fault

Reaction: A_INFEED: OFF2 (DCBRAKE, NONE, OFF1, OFF3, STOP1, STOP2)
SERVO: ENCODER (DCBRAKE, NONE, OFF1, OFF2, OFF3, STOP1, STOP2)
VECTOR: ENCODER (DCBRAKE, NONE, OFF1, OFF2, OFF3, STOP1, STOP2)

Acknowledge: IMMEDIATELY (POWER ON)

Cause: A fault occurred on the Sensor Module for encoder 2 that cannot be interpreted by the Control Unit firmware.
This can occur if the firmware on the Sensor Module for encoder 2 is more recent than the firmware on the Control Unit.
Fault value (r0949, decimal):
Fault number.
If required, the significance of this new fault can be read about in a more recent description of the Control Unit.

Remedy: - replace the firmware on the Sensor Module by an older firmware version (r0148).
- upgrade the firmware on the Control Unit (r0018).

Reaction upon N: NONE

Acknowledge upon N: NONE

Reaction upon A: NONE

Acknowledge upon A: NONE

F32905 Encoder 2: Parameteriz. error

Reaction: A_INFEED: OFF2 (NONE, OFF1)
SERVO: ENCODER (DCBRAKE, NONE, OFF1, OFF2, OFF3, STOP1, STOP2)
VECTOR: ENCODER (DCBRAKE, NONE, OFF1, OFF2, OFF3, STOP1, STOP2)

Acknowledge: IMMEDIATELY

Cause: A parameter of encoder 2 was detected as being incorrect.
It is possible that the parameterized encoder type does not match the connected encoder.
The parameter involved can be determined as follows:
- determine the parameter number using the fault value (r0949).
- determine the parameter index (p0188).
Fault value (r0949, decimal):
Parameter number.

Remedy: - check whether the connected encoder type matches the encoder that has been parameterized.
- correct the parameter specified by the fault value (r0949) and p0188.

A32920 (F) Encoder 2: Temperature sensor fault

Reaction: NONE

Acknowledge: NONE

Cause: When evaluating the temperature sensor, an error occurred.
Alarm value (r2124, decimal):
1: Wire breakage or sensor not connected (KTY: R > 1630 Ohm).
2: Measured resistance too low (PTC: R < 20 Ohm, KTY: R < 50 Ohm).

Remedy: - check that the encoder cable is the correct type and is correctly connected.
- check the temperature sensor selection in p0600 to p0603.
- replace the Sensor Module (hardware defect or incorrect calibration data).

Reaction upon F: A_INFEED: NONE (DCBRAKE, OFF1, OFF2, OFF3, STOP1, STOP2)
SERVO: NONE (DCBRAKE, ENCODER, OFF1, OFF2, OFF3, STOP1, STOP2)
VECTOR: NONE (DCBRAKE, ENCODER, OFF1, OFF2, OFF3, STOP1, STOP2)

Acknowledge upon F: IMMEDIATELY

© Siemens AG, 2005. All rights reserved

A32999 (F, N) Encoder 2: Unknown alarm

Reaction: NONE

Acknowledge: NONE

Cause: A alarm has occurred on the Sensor Module for encoder 2 that cannot be interpreted by the Control Unit firmware.
This can occur if the firmware on the Sensor Module for encoder 2 is more recent than the firmware on the Control Unit.
Alarm value (r2124, decimal):
Alarm number.
If required, the significance of this new alarm can be read about in a more recent description of the Control Unit.

Remedy: - replace the firmware on the Sensor Module by an older firmware version (r0148).
- upgrade the firmware on the Control Unit (r0018).

Reaction upon F: A_INFEED: NONE (DCBRAKE, OFF1, OFF2, OFF3, STOP1, STOP2)
SERVO: NONE (DCBRAKE, ENCODER, OFF1, OFF2, OFF3, STOP1, STOP2)
VECTOR: NONE (DCBRAKE, ENCODER, OFF1, OFF2, OFF3, STOP1, STOP2)

Acknowledge upon F: IMMEDIATELY (POWER ON)

Reaction upon N: NONE

Acknowledge upon N: NONE

F33100 Encoder 3: Zero mark clearance error

Reaction: A_INFEED: NONE (DCBRAKE, OFF1, OFF2, OFF3, STOP1, STOP2)
SERVO: ENCODER (DCBRAKE, NONE, OFF1, OFF2, OFF3, STOP1, STOP2)
VECTOR: ENCODER (DCBRAKE, NONE, OFF1, OFF2, OFF3, STOP1, STOP2)

Acknowledge: READY

Cause: The measured zero mark clearance does not correspond to the parameterized zero mark clearance.
For distance-coded encoders, the zero mark distance is determined from zero marks detected pairs. This means that if a zero mark is missing, depending on the pair generation, this cannot result in a fault and also has no effect in the system.
The zero mark clearance for the zero mark monitoring is set in p0425 (rotary encoder) or p0424 (linear encoder).
Fault value (r0949, decimal):
Last measured zero mark clearance in increments (4 increments = 1 encoder pulse).
The sign designates the direction of motion when detecting the zero mark clearance (distance).

Remedy: - check that the encoder cables are routed in compliance with EMC.
- check the plug connections.
. check the encoder type (encoder with equidistant zero marks).
- adapt the parameter for the distance between zero marks (p0424, p0425).
- replace the encoder or encoder cable.

© Siemens AG, 2005. All rights reserved

F33101 Encoder 3: Zero mark failed

Reaction: A_INFEED: NONE (DCBRAKE, OFF1, OFF2, OFF3, STOP1, STOP2)
SERVO: ENCODER (DCBRAKE, NONE, OFF1, OFF2, OFF3, STOP1, STOP2)
VECTOR: ENCODER (DCBRAKE, NONE, OFF1, OFF2, OFF3, STOP1, STOP2)

Acknowledge: READY

Cause: The 1.5 x parameterized zero mark distance was exceeded.
The zero mark clearance for the zero mark monitoring is set in p0425 (rotary encoder) or p0424 (linear encoder).
Fault value (r0949, decimal):
Number of increments after POWER ON or since the last zero mark that was detected (4 increments = 1 encoder pulse).

Remedy: - check that the encoder cables are routed in compliance with EMC.
- check the plug connections.
. check the encoder type (encoder with equidistant zero marks).
- adapt the parameter for the clearance between zero marks (p0425).
- replace the encoder or encoder cable.

F33110 Encoder 3: EnDat communications error

Reaction: A_INFEED: NONE
SERVO: ENCODER (DCBRAKE, NONE)
VECTOR: ENCODER (DCBRAKE, NONE)

Acknowledge: READY

Cause: Serial communication protocol transfer error between the encoder and evaluation module SMCxx.
Fault value (r0949, binary):
Bit 0: Alarm bit in the position protocol.
Bit 1: Incorrect quiescent level on the data line.
Bit 2: EnDat encoder does not respond (does not supply a start bit within 50 ms).
Bit 3: CRC error: The checksum in the protocol from the encoder does not match the data.
Bit 4: Incorrect encoder acknowledgement: The encoder incorrectly understood the task (request) or cannot execute it.
Bit 5: Internal error in the EnDat driver: An illegal mode command was requested.
Bit 6: Timeout with cyclically reading.

Remedy: Re fault value:
Bit 0 = 1: Encoder defective. F31111 may provide additional details.
Bit 1 = 1: Incorrect encoder type / replace the encoder or encoder cable.
Bit 2 = 1: Incorrect encoder type / replace the encoder or encoder cable.
Bit 3 = 1: EMC / connect the cable shield, replace the encoder or encoder cable.
Bit 4 = 1: EMC / connect the cable shield, replace the encoder or encoder cable, replace the Sensor Module.
Bit 5 = 1: EMC / connect the cable shield, replace the encoder or encoder cable, replace the Sensor Module.
Bit 6 = 1: Update the Sensor Module firmware.

F33111 (A) Encoder 3: Absolute value encoder EnDat, internal fault/error

Reaction: A_INFEED: NONE
SERVO: ENCODER (DCBRAKE, NONE)
VECTOR: ENCODER (DCBRAKE, NONE)

Acknowledge: READY

Cause: The EnDat encoder fault word contains fault bits that have been set.
Fault value (r0949, binary):
Bit 0: Lighting system failed.
Bit 1: Signal amplitude too low.
Bit 2: Position value incorrect.
Bit 3: Encoder power supply overvoltage condition.
Bit 4: Encoder power supply undervoltage condition.
Bit 5: Encoder power supply overcurrent condition.
Bit 6: The battery must be changed.

© Siemens AG, 2005. All rights reserved

Remedy: Re fault value, bit 0 = 1:
Encoder is defective. Replace the encoder, where the motor encoder has a direct DRIVE-CLiQ socket: Replace the motor.
Re fault value, bit 1 = 1:
Encoder is defective. Replace the encoder, where the motor encoder has a direct DRIVE-CLiQ socket: Replace the motor.
Re fault value, bit 2 = 1:
Encoder is defective. Replace the encoder, where the motor encoder has a direct DRIVE-CLiQ socket: Replace the motor.
Re fault value, bit 3 = 1:
5 V power supply voltage fault.
When using an SMC. Check the plug-in cable between the encoder and SMC or replace the SMC.
When a motor encoder with a direct DRIVE-CLiQ connection is used: Replace the motor.
Re fault value, bit 4 = 1:
5 V power supply voltage fault.
When using an SMC. Check the plug-in cable between the encoder and SMC or replace the SMC.
When using a motor with DRIVE-CLiQ: Replace the motor.
Re fault value, bit 5 = 1:
Encoder is defective. Replace the encoder, where the motor encoder has a direct DRIVE-CLiQ socket: Replace the motor.
Re fault value, bit 6 = 1:
The battery must be changed - only for encoders with battery back-up.

Reaction upon A: NONE

Acknowledge upon A: NONE

F33115 Encoder 3: Amplitude error track A or B (A^2 + B^2)

Reaction: A_INFEED: NONE
SERVO: ENCODER (DCBRAKE, NONE)
VECTOR: ENCODER (DCBRAKE, NONE)

Acknowledge: READY

Cause: SMC20:
The nominal signal level of the encoder must lie in the range 375 mV to 600 mV (500 mV -25 % / +20 %).
On the other hand, the response thresholds are < 230 mV and > 750 mV (frequency characteristic).
SMC10:
The nominal signal level is at 2900 mV (2.0 Vrms). The response thresholds are at < 1070 mV and > 3535 mV.
Fault value (r0949, decimal):
Low word:
Signal level, track A (16 bits with sign).
High word:
Signal level, track B (16 bits with sign).
SMC20:
A signal level of 500 mV peak value corresponds to the numerical value 5333 hex = 21299 dec.
SMC10:
A signal level of 2900 mV peak value corresponds to the numerical value 6666 hex = 26214 dec.

Remedy: - check that the encoder cables are routed in compliance with EMC.
- check the plug connections.
- replace the encoder or encoder cable.
- check the encoder module (e.g. contacts).

© Siemens AG, 2005. All rights reserved

F33116 Encoder 3: Amplitude error, monitoring track A + B

Reaction: A_INFEED: NONE
SERVO: ENCODER (DCBRAKE, NONE)
VECTOR: ENCODER (DCBRAKE, NONE)

Acknowledge: IMMEDIATELY

Cause: The amplitude of the rectified encoder signals A and B is not within the tolerance bandwidth (hardware monitoring).
The nominal signal level of the encoder must lie in the range 375 mV to 600 mV (500 mV -25 % / +20 %).
On the other hand, the hardware response thresholds are at < 176 mV and > 1.35 V.
Fault value (r0949, decimal):
Low word: Signal level, track A (16 bits with sign).
High word: Signal level, track B (16 bits with sign).
A signal level of 500 mV corresponds to the numerical value 5333 hex = 21299 dec.
These analog values are not measured at the same time with the hardware fault output.

Remedy: - check that the encoder cables are routed in compliance with EMC.
- check the plug connections.
- replace the encoder or encoder cable.
- check the encoder module (e.g. contacts).

F33117 Encoder 3: Inversion error, signals A and B

Reaction: A_INFEED: NONE
SERVO: ENCODER (DCBRAKE, NONE)
VECTOR: ENCODER (DCBRAKE, NONE)

Acknowledge: IMMEDIATELY

Cause: For a square-wave signal encoder (TTL. bipolar. double ended) the A* and B* signals are not inverted with respect to signals A and B.

Remedy: Check the setting of p0405: p0405.2 = 1 is only possible if the encoder is connected at X520.
Check the encoder/cable: Does the encoder supply TTL signals and the associated inverted signals?

F33118 Encoder 3: Speed difference outside the tolerance range

Reaction: A_INFEED: NONE
SERVO: ENCODER (DCBRAKE, NONE)
VECTOR: ENCODER (DCBRAKE, NONE)

Acknowledge: READY

Cause: For an HTL/TTL encoder, the speed difference between two sampling cycles has exceeded the value in p0492.
Fault value (r0949, decimal):
Only for internal Siemens troubleshooting.

Remedy: - check the tachometer feeder cable for interruptions.
- check the grounding of the tachometer shielding.
- if required, increase the maximum speed difference per sampling cycle (p0492).

F33120 Encoder 3: Power supply volt.

Reaction: A_INFEED: NONE
SERVO: ENCODER (DCBRAKE, NONE)
VECTOR: ENCODER (DCBRAKE, NONE)

Acknowledge: READY

Cause: Encoder power supply voltage fault.
Note:
If the encoder cables 6FX2002-2EQ00-.... and 6FX2002-2CH00-.... are interchanged, this can result in the encoder being destroyed because the pins of the operating voltage are reversed.
Fault value (r0949, binary):
Bit 0: Undervoltage condition on the sense line (threshold 4.75 V).
Bit 1: Encoder power supply voltage overcurrent condition (threshold 450 mA).

Remedy: For fault value, bit 0 = 1:
- correct encoder cable connected?
- check the plug connections of the encoder cable.
- SMC30: Check the parameterization (p0404.22).
For fault value, bit 1 = 1:
- correct encoder cable connected?
- replace the encoder or encoder cable.

© Siemens AG, 2005. All rights reserved

F33121 (N) Encoder 3: Coarse position incorrect

Reaction: A_INFEED: NONE
SERVO: ENCODER (NONE)
VECTOR: ENCODER (NONE)

Acknowledge: READY

Cause: For the actual value sensing, an error was detected on the module. As a result of this error, it must be assumed that the actual value sensing supplies an incorrect coarse position.

Remedy: Replace the motor with DRIVE-CLiQ or the appropriate Sensor Module.

Reaction upon N: NONE

Acknowledge upon N: NONE

F33129 (N) Encoder 3: Position difference, hall sensor/track C/D and A/B too large

Reaction: A_INFEED: NONE
SERVO: ENCODER (DCBRAKE, NONE)
VECTOR: ENCODER (DCBRAKE, NONE)

Acknowledge: READY

Cause: The error of track C/D is greater than +/-15 ° mechanical or +/-60 ° electrical.
One period of track C/D corresponds to 360 ° mechanical.
One period of the Hall signal corresponds to 360 ° electrical.
The monitoring responds if, for example, Hall sensors are connected as equivalent for the C/D tracks with the incorrect rotational sense or supply values that are not accurate enough.
After the fine synchronization using one reference mark or 2 reference marks for distance-coded encoders, this fault is no longer initiated, but instead, Alarm A33429.
Fault value (r0949, decimal):
Measured deviation as mechanical angle (16 bits with sign, 182 dec corresponds to 1 °).

Remedy: - track C or D not connected.
- correct the direction of rotation of the Hall sensor possibly connected as equivalent for track C/D.
- check that the encoder cables are routed in compliance with EMC.
- check the adjustment of the Hall sensor.

Reaction upon N: NONE

Acknowledge upon N: NONE

F33130 Encoder 3: Zero mark and position from the coarse synchronization are incorrect

Reaction: A_INFEED: NONE
SERVO: ENCODER (DCBRAKE, NONE, OFF1, OFF2, OFF3, STOP1, STOP2)
VECTOR: ENCODER (DCBRAKE, NONE, OFF1, OFF2, OFF3, STOP1, STOP2)

Acknowledge: READY

Cause: After initializing the pole position using track C/D, Hall signals or pole position identification routine, the zero mark was detected outside the permissible range. For distance-coded encoders, the test is carried-out after passing 2 zero marks. Fine synchronization was not carried-out.
The deviation may be up to 18 ° mechanical or up to 60 ° electrical.
Fault value (r0949, decimal):
Normalization: 32768 = 180 °
High word:
Mechanical zero mark position determined.
If the initialization via a track C/D is selected in p0404, then it is checked whether the zero mark occurs in an angular range of +/-18 ° mechanical.
Low word:
Deviation of the zero mark from the expected position as electrical angle.
If the correction of the commutation position with the zero mark is selected in p0404, then a difference of a maximum of +/- 60 ° electrical is permitted.

Remedy: - check that the encoder cables are routed in compliance with EMC.
- check the plug connections.
- if the Hall sensor is used as an equivalent for track C/D, check the connection.
- check the connection of track C or D.
- replace the encoder or encoder cable.

© Siemens AG, 2005. All rights reserved

F33131 Encoder 3: Deviation, position incremental/absolute too large

Reaction: A_INFEED: NONE
SERVO: ENCODER (DCBRAKE, NONE, OFF1, OFF2, OFF3, STOP1, STOP2)
VECTOR: ENCODER (DCBRAKE, NONE, OFF1, OFF2, OFF3, STOP1, STOP2)

Acknowledge: READY

Cause: When cyclically reading the absolute position, an excessively high deviation to the incremental position was detected. The absolute position that was read is rejected.
Limit value for the deviation:
- EnDat encoder: Is supplied from the encoder and is a minimum of 2 quadrants (e.g. EQI 1325 > 2 quadrants, EQN 1325 > 50 quadrants).
- other encoders: 15 pulses = 60 quadrants.
Fault value (r0949, decimal):
Deviation in quadrants (1 pulse = 4 quadrants).

Remedy:
- check that the encoder cables are routed in compliance with EMC.
- check the plug connections.
- replace the encoder or encoder cable.
- check whether the coding disk is dirty or there are strong ambient magnetic fields.

F33150 Encoder 3: Initialization error

Reaction: A_INFEED: NONE
SERVO: ENCODER (DCBRAKE, NONE, OFF1, OFF2, OFF3, STOP1, STOP2)
VECTOR: ENCODER (DCBRAKE, NONE, OFF1, OFF2, OFF3, STOP1, STOP2)

Acknowledge: READY

Cause: Encoder functionality selected in p0404 is not operating correctly.
Fault value (r0949, hexadecimal):
The fault value is a bit field. Every set bit indicates functionality that is faulted.
The bit assignment corresponds to that of p0404 (e.g. bit 5 set: Error track C/D).

Remedy:
- Check that p0404 is correctly set.
- check the encoder type used (incremental/absolute value) and for SMCxx, the encoder cable.
- if relevant, note additional fault/error messages that describe the fault in detail.

F33405 (N, A) Encoder 3: Encoder evaluation temperature too high

Reaction: NONE (DCBRAKE, OFF1, OFF2, OFF3, STOP1, STOP2)

Acknowledge: IMMEDIATELY (POWER ON)

Cause: The encoder evaluation for a motor with DRIVE-CLiQ has detected an excessively high temperature.
The fault threshold is 125 ° C.
Alarm value (r2124, decimal):
Measured board/module temperature in 0.1 °C.

Remedy: Reduce the ambient temperature for the DRIVE-CLiQ connection of the motor.

Reaction upon N: NONE

Acknowledge upon N: NONE

Reaction upon A: NONE

Acknowledge upon A: NONE

A33410 (F, N) Encoder 3: Serial communications

Reaction: NONE

Acknowledge: NONE

Cause: Serial communication protocol transfer error between the encoder and evaluation module SMCxx.
Alarm value (r2124, binary):
Bit 0: Alarm bit in the position protocol.
Bit 1: Incorrect quiescent level on the data line.
Bit 2: EnDat encoder does not respond (does not supply a start bit).
Bit 3: CRC error: The checksum in the protocol from the encoder does not match the data.
Bit 4: Incorrect encoder acknowledgement: The encoder incorrectly understood the task (request) or cannot execute it.
Bit 5: Internal error in the EnDat driver: An illegal mode command was requested.
Bit 6: Position value longer than 40 bits.

© Siemens AG, 2005. All rights reserved

Remedy: - check that the encoder cables are routed in compliance with EMC.
- check the plug connections.
- replace the encoder.

Reaction upon F: A_INFEED: NONE
SERVO: NONE (DCBRAKE, ENCODER, OFF1, OFF2, OFF3, STOP1, STOP2)
VECTOR: NONE (DCBRAKE, ENCODER, OFF1, OFF2, OFF3, STOP1, STOP2)

Acknowledge upon F: IMMEDIATELY

Reaction upon N: NONE

Acknowledge upon N: NONE

A33411 (F, N) Encoder 3: EnDat encoder signals alarms

Reaction: NONE

Acknowledge: NONE

Cause: The error word of the EnDat encoder has alarm bits that have been set.
Alarm value (r2124, binary):
Bit 0: Frequency exceeded (speed too high).
Bit 1: Temperature exceeded.
Bit 2: Control reserve, lighting system exceeded.
Bit 3: Battery discharged.
Bit 4: Reference point passed.

Remedy: Replace encoder.

Reaction upon F: A_INFEED: NONE (DCBRAKE, OFF1, OFF2, OFF3, STOP1, STOP2)
SERVO: NONE (DCBRAKE, ENCODER, OFF1, OFF2, OFF3, STOP1, STOP2)
VECTOR: NONE (DCBRAKE, ENCODER, OFF1, OFF2, OFF3, STOP1, STOP2)

Acknowledge upon F: IMMEDIATELY

Reaction upon N: NONE

Acknowledge upon N: NONE

A33414 (F, N) Encoder 3: Amplitude error track C or D (C^2 + D^2)

Reaction: NONE

Acknowledge: NONE

Cause: The amplitude (C^2 + D^2) of track C or D of the encoder or from the Hall signals, is not within the tolerance bandwidth.
The nominal signal must be in the range 375 mV to 600 mV (500 mV -25 % / +20 %).
On the other hand, the response thresholds are < 230 mV and > 750 mV (frequency characteristic).
This fault also occurs if the A/D converter is overcontrolled.
If the amplitude is not within the tolerance bandwidth, then it cannot be used to initialize the start position.
Alarm value (r2124, decimal):
Low word: Signal level, track C (16 bits with sign).
High word: Signal level, track D (16 bits with sign).
A signal level of 500 mV corresponds to the numerical value 5333 hex = 21299 dec.

Remedy: - check that the encoder cables are routed in compliance with EMC.
- check the plug connections.
- replace the encoder or encoder cable.
- check the encoder module (e.g. contacts).
- check the Hall sensor box

Reaction upon F: A_INFEED: NONE (DCBRAKE, OFF1, OFF2, OFF3, STOP1, STOP2)
SERVO: NONE (DCBRAKE, ENCODER, OFF1, OFF2, OFF3, STOP1, STOP2)
VECTOR: NONE (DCBRAKE, ENCODER, OFF1, OFF2, OFF3, STOP1, STOP2)

Acknowledge upon F: IMMEDIATELY

Reaction upon N: NONE

Acknowledge upon N: NONE

© Siemens AG, 2005. All rights reserved

N33415 (F, A) Encoder 3: Amplitude alarm, track A or B (A^2 + B^2)

Reaction: NONE

Acknowledge: NONE

Cause: The amplitude (A^2 + B^2) of track A or B is not within the tolerance bandwidth.
SMC20:
The nominal signal level is at 500 mV (500 mV -25 % / +20 %). The response threshold is < 300 mV.
SMC10:
The nominal signal level is at 2900 mV (2.0 Vrms). The response threshold is < 1414 mV (1.0 Vrms).
Alarm value (r2124, decimal):
Low word:
Amplitude square root(A*A + B*B).
SMC20:
A signal level of 500 mV peak value corresponds to the numerical value 299A hex = 10650 dec.
SMC10:
A signal level of 2900 mV peak value corresponds to the numerical value 3333 hex = 13107 dec.
High word:
Angle 0 to 65535 corresponds to 0 to 360 degrees of the fine position. Zero degrees is at the negative zero crossover of track B.

Remedy: - check the speed range, frequency characteristic (amplitude characteristic) of the measuring equipment is not sufficient for the speed range.
- check that the encoder cables are routed in compliance with EMC.
- check the plug connections.
- replace the encoder or encoder cable.
- check the encoder module (e.g. contacts).
- dirty code disk
- aged lighting system.

Reaction upon F: A_INFEED: NONE (DCBRAKE, OFF1, OFF2, OFF3, STOP1, STOP2)
SERVO: NONE (DCBRAKE, ENCODER, OFF1, OFF2, OFF3, STOP1, STOP2)
VECTOR: NONE (DCBRAKE, ENCODER, OFF1, OFF2, OFF3, STOP1, STOP2)

Acknowledge upon F: IMMEDIATELY

Reaction upon A: NONE

Acknowledge upon A: NONE

A33418 (F, N) Encoder 3: Speed difference per sampling rated exceeded

Reaction: NONE

Acknowledge: NONE

Cause: For an HTL/TTL encoder, the speed difference between two sampling cycles has exceeded the value in p0492.
Alarm value (r2124, decimal):
Only for internal Siemens troubleshooting.

Remedy: - check the tachometer feeder cable for interruptions.
- check the grounding of the tachometer shielding.
- if required, increase the setting of p0492.

Reaction upon F: NONE (DCBRAKE, OFF1, OFF2, OFF3, STOP1, STOP2)

Acknowledge upon F: IMMEDIATELY

Reaction upon N: NONE

Acknowledge upon N: NONE

© Siemens AG, 2005. All rights reserved

A33419 (F, N) Encoder 3: Track A or B outside the tolerance range

Reaction: NONE

Acknowledge: NONE

Cause: The amplitude, phase or offset correction for track A or B is at the limit.
Amplitude error correction: Amplitude B / Amplitude A = 0.78 ... 1.27
Phase: <84 degrees or >96 degrees
SMC20: Offset correction: +/-140 mV
SMC10: Offset correction: +/-650 mV
Alarm value (r2124, hexadecimal):
xxx1: Minimum of the offset correction, track B
xxx2: Maximum of the offset correction, track B
xx1x: Minimum of the offset correction, track A
xx2x: Maximum of the offset correction, track A
x1xx: Minimum of the amplitude correction, track B/A
x2xx: Maximum of the amplitude correction, track B/A
1xxx: Minimum of the phase error correction
2xxx: Maximum of the phase error correction

Remedy: - check mechanical mounting tolerances for encoders without their own bearings (e.g. toothed-wheel encoders).
- check the plug connections (also the transition resistance).
- check the encoder signals.
- replace the encoder or encoder cable.

Reaction upon F: A_INFEED: NONE (DCBRAKE, OFF1, OFF2, OFF3, STOP1, STOP2)
SERVO: NONE (DCBRAKE, ENCODER, OFF1, OFF2, OFF3, STOP1, STOP2)
VECTOR: NONE (DCBRAKE, ENCODER, OFF1, OFF2, OFF3, STOP1, STOP2)

Acknowledge upon F: IMMEDIATELY

Reaction upon N: NONE

Acknowledge upon N: NONE

A33429 (F, N) Encoder 3: Position difference, hall sensor/track C/D and A/B too large

Reaction: NONE

Acknowledge: NONE

Cause: The error of track C/D is greater than +/-15 ° mechanical or +/-60 ° electrical.
One period of track C/D corresponds to 360 ° mechanical.
One period of the Hall signal corresponds to 360 ° electrical.
The monitoring responds if, for example, Hall sensors are connected as equivalent for the C/D tracks with the incorrect rotational sense or supply values that are not accurate enough.
Alarm value (r2124, decimal):
Measured deviation as mechanical angle (16 bits with sign, 182 dec corresponds to 1 °).

Remedy: - track C or D not connected.
- correct the direction of rotation of the Hall sensor possibly connected as equivalent for track C/D.
- check that the encoder cables are routed in compliance with EMC.
- check the adjustment of the Hall sensor.

Reaction upon F: A_INFEED: NONE (DCBRAKE, OFF1, OFF2, OFF3, STOP1, STOP2)
SERVO: NONE (DCBRAKE, ENCODER, OFF1, OFF2, OFF3, STOP1, STOP2)
VECTOR: NONE (DCBRAKE, ENCODER, OFF1, OFF2, OFF3, STOP1, STOP2)

Acknowledge upon F: IMMEDIATELY

Reaction upon N: NONE

Acknowledge upon N: NONE

© Siemens AG, 2005. All rights reserved

F33801 Encoder 3 DRIVE-CLiQ: Sign-of-life missing

Reaction: A_INFEED: OFF2 (NONE)
SERVO: ENCODER (DCBRAKE, NONE)
VECTOR: ENCODER (DCBRAKE, NONE)

Acknowledge: IMMEDIATELY

Cause: DRIVE-CLiQ communications error between the Control Unit and the encoder involved.
Fault value (r0949, hexadecimal):
0A: The sign-of-life bit in the receive telegram is not set.

Remedy: - check the electrical cabinet design and cable routing for EMC compliance
- replace the component involved.
See also: p9916

F33802 Encoder 3: Time slice overflow

Reaction: A_INFEED: OFF2 (NONE)
SERVO: ENCODER (DCBRAKE, NONE)
VECTOR: ENCODER (DCBRAKE, NONE)

Acknowledge: IMMEDIATELY

Cause: Time slice overflow, encoder 3.
Fault value (r0949, decimal):
9: Time slice overflow of the fast (current controller clock cycle) time slice.
10: Time slice overflow of the average time slice.
12: Time slice overflow of the slow time slice.
999: Timeout when waiting for SYNO, e.g. unexpected return to non-cyclic operation.

Remedy: Reduce the current controller frequency.

F33804 Encoder 3: CRC CODE RAM

Reaction: A_INFEED: OFF2 (NONE)
SERVO: ENCODER (DCBRAKE, NONE)
VECTOR: ENCODER (DCBRAKE, NONE)

Acknowledge: IMMEDIATELY

Cause: The checksum via the CODE-RAM of the Sensor Module has changed in operation.
Fault value (r0949, hexadecimal):
Difference between the checksum at POWER ON and the actual checksum.

Remedy: Hardware defect: Replace the Sensor Module.
Firmware error: If required, upgrade the firmware.

F33805 Encoder 3: Incorrect EPROM checksum

Reaction: A_INFEED: OFF2 (NONE)
SERVO: ENCODER (DCBRAKE, NONE)
VECTOR: ENCODER (DCBRAKE, NONE)

Acknowledge: IMMEDIATELY

Cause: Internal parameter data is corrupted.
Fault value (r0949, hexadecimal):
01: EEPROM access error.
02: Too many blocks in the EEPROM.

Remedy: Replace the module.

F33806 Encoder 3: Initialization unsuccessful

Reaction: A_INFEED: OFF2 (NONE)
SERVO: ENCODER (DCBRAKE, NONE)
VECTOR: ENCODER (DCBRAKE, NONE)

Acknowledge: READY

Cause: The encoder was not successfully initialized.
Fault value (r0949, hexadecimal):
1, 2, 3: Encode initialization with the motor rotating.

Remedy: Acknowledge the fault.

© Siemens AG, 2005. All rights reserved

F33820 Encoder 3 DRIVE-CLiQ: Telegram error

Reaction: A_INFEED: OFF2
SERVO: ENCODER (DCBRAKE, NONE)
VECTOR: ENCODER (DCBRAKE, NONE)

Acknowledge: IMMEDIATELY

Cause: DRIVE-CLiQ communications error between the Control Unit and the encoder involved.
Fault value (r0949, hexadecimal):
01: CRC error.
02: Telegram is shorter than specified in the length byte or in the receive list.
03: Telegram is longer than specified in the length byte or in the receive list.
04: The length of the receive telegram does not match the receive list.
05: The type of the receive telegram does not match the receive list.
06: The address of the encoder in the telegram and in the receive list do not match.
07: The encoder expects a SYNC telegram, but the receive telegram is not a SYNC telegram.
08: The encoder does not expect a SYNC telegram, but the receive telegram is a SYNC telegram.
09: The error bit in the receive telegram is set.
10: The receive telegram is too early.

Remedy: - carry-out a POWER ON.
- check the electrical cabinet design and cable routing for EMC compliance
- check the DRIVE-CLiQ wiring (interrupted cable, contacts, ...).
See also: p9916

F33835 Encoder 3 DRIVE-CLiQ: Cyclic data transfer error

Reaction: A_INFEED: OFF2
SERVO: ENCODER (DCBRAKE, NONE)
VECTOR: ENCODER (DCBRAKE, NONE)

Acknowledge: IMMEDIATELY

Cause: DRIVE-CLiQ communications error between the Control Unit and the encoder involved. The nodes do not send and receive in synchronism.
Fault value (r0949, hexadecimal):
21: The cyclic telegram has not been received.
22: Timeout in the telegram receive list.
40: Timeout in the telegram send list.

Remedy: - carry-out a POWER ON.
- replace the component involved.
See also: p9916

F33836 Encoder 3 DRIVE-CLiQ: Send error for DRIVE-CLiQ data

Reaction: A_INFEED: OFF2
SERVO: ENCODER (DCBRAKE, NONE)
VECTOR: ENCODER (DCBRAKE, NONE)

Acknowledge: IMMEDIATELY

Cause: DRIVE-CLiQ communications error between the Control Unit and the encoder involved. Data were not able to be sent.
Fault value (r0949, hexadecimal):
41: Telegram type does not match send list.

Remedy: - carry-out a POWER ON.

© Siemens AG, 2005. All rights reserved

F33837 Encoder 3 DRIVE-CLiQ: Component faulted

Reaction: A_INFEED: OFF2
SERVO: ENCODER (DCBRAKE, NONE)
VECTOR: ENCODER (DCBRAKE, NONE)

Acknowledge: IMMEDIATELY

Cause: Fault detected on the DRIVE-CLiQ component involved. Faulty hardware cannot be excluded.
Fault value (r0949, hexadecimal):
20: Error in the telegram header.
23: Receive error: The telegram buffer memory contains an error.
42: Send error: The telegram buffer memory contains an error.
43: Send error: The telegram buffer memory contains an error.

Remedy: - check the DRIVE-CLiQ wiring (interrupted cable, contacts, ...).
- check the electrical cabinet design and cable routing for EMC compliance
- if required, use another DRIVE-CLiQ socket (p9904).
- replace the component involved.

F33845 Encoder 3 DRIVE-CLiQ: Cyclic data transfer error

Reaction: A_INFEED: OFF2
SERVO: ENCODER (DCBRAKE, NONE)
VECTOR: ENCODER (DCBRAKE, NONE)

Acknowledge: IMMEDIATELY

Cause: DRIVE-CLiQ communications error between the Control Unit and the encoder involved.
Fault value (r0949, hexadecimal):
0B: Synchronization error during alternating cyclic data transfer.

Remedy: Carry-out a POWER ON.
See also: p9916

F33850 Encoder 3: Sensor Module, internal software error

Reaction: A_INFEED: OFF2 (NONE)
SERVO: ENCODER (DCBRAKE, NONE)
VECTOR: ENCODER (DCBRAKE, NONE)

Acknowledge: POWER ON

Cause: Internal software error in the Sensor Module of encoder 3.
Fault value (r0949, decimal):
1: Background time slice is blocked.
2: Checksum over the code memory is not OK.
10000: OEM memory of the EnDat encoder contains data that cannot be interpreted.

Remedy: - replace the Sensor Module.
- if required, upgrade the firmware in the Sensor Module.
- contact the Hotline.

F33851 CU DRIVE-CLiQ: Sign-of-life missing

Reaction: A_INFEED: NONE (OFF1, OFF2)
SERVO: ENCODER (DCBRAKE, NONE)
VECTOR: ENCODER (DCBRAKE, NONE)

Acknowledge: IMMEDIATELY

Cause: A DRIVE-CLiQ communications error has occurred between the Control Unit and the power module involved. The DRIVE-CLiQ component did not set the sign of life to the Control Unit.
Fault value (r0949, hexadecimal):
0A: The sign-of-life bit in the receive telegram is not set.

Remedy: - upgrade the firmware of the component involved.

© Siemens AG, 2005. All rights reserved

F33860 CU DRIVE-CLiQ: Telegram error

Reaction: A_INFEED: NONE (OFF1, OFF2)
SERVO: ENCODER (DCBRAKE, NONE)
VECTOR: ENCODER (DCBRAKE, NONE)

Acknowledge: IMMEDIATELY

Cause: DRIVE-CLiQ communications error between the Control Unit and the encoder involved.
Fault value (r0949, hexadecimal):
11: CRC error and the receive telegram is too early.
01: CRC error.
12: The telegram is shorter than that specified in the length byte or in the receive list and the receive telegram is too early.
02: Telegram is shorter than specified in the length byte or in the receive list.
13: The telegram is longer than that specified in the length byte or in the receive list and the receive telegram is too early.
03: Telegram is longer than specified in the length byte or in the receive list.
14: The length of the receive telegram does not match the receive list and the receive telegram is too early.
04: The length of the receive telegram does not match the receive list.
15: The type of the receive telegram does not match the receive list and the receive telegram is too early.
05: The type of the receive telegram does not match the receive list.
16: The address of the encoder in the telegram and in the receive list does not match and the receive telegram is too early.
06: The address of the encoder in the telegram and in the receive list do not match.
19: The error bit in the receive telegram is set and the receive telegram is too early.
09: The error bit in the receive telegram is set.
10: The receive telegram is too early.

Remedy: - carry-out a POWER ON.
- check the electrical cabinet design and cable routing for EMC compliance
- check the DRIVE-CLiQ wiring (interrupted cable, contacts, ...).
See also: p9915

F33885 CU DRIVE-CLiQ: Cyclic data transfer error

Reaction: A_INFEED: NONE (OFF1, OFF2)
SERVO: ENCODER (DCBRAKE, NONE)
VECTOR: ENCODER (DCBRAKE, NONE)

Acknowledge: IMMEDIATELY

Cause: DRIVE-CLiQ communications error between the Control Unit and the encoder involved. The nodes do not send and receive in synchronism.
Fault value (r0949, hexadecimal):
1A: Sign-of-life bit in the receive telegram not set and the receive telegram is too early.
21: The cyclic telegram has not been received.
22: Timeout in the telegram receive list.
40: Timeout in the telegram send list.
62: Error at the transition to cyclic operation.

Remedy: - check the power supply voltage of the component involved.
- carry-out a POWER ON.
- replace the component involved.
See also: p9915

F33886 CU DRIVE-CLiQ: Error when sending DRIVE-CLiQ data

Reaction: A_INFEED: NONE (OFF1, OFF2)
SERVO: ENCODER (DCBRAKE, NONE)
VECTOR: ENCODER (DCBRAKE, NONE)

Acknowledge: IMMEDIATELY

Cause: DRIVE-CLiQ communications error between the Control Unit and the encoder involved. Data were not able to be sent.
Fault value (r0949, hexadecimal):
41: Telegram type does not match send list.

Remedy: - carry-out a POWER ON.

© Siemens AG, 2005. All rights reserved

F33887 CU DRIVE-CLiQ: Component faulted

Reaction: A_INFEED: NONE (OFF1, OFF2)
SERVO: ENCODER (DCBRAKE, NONE)
VECTOR: ENCODER (DCBRAKE, NONE)

Acknowledge: IMMEDIATELY

Cause: Fault detected on the DRIVE-CLiQ component involved. Faulty hardware cannot be excluded.
Fault value (r0949, hexadecimal):
20: Error in the telegram header.
23: Receive error: The telegram buffer memory contains an error.
42: Send error: The telegram buffer memory contains an error.
43: Send error: The telegram buffer memory contains an error.
60: Response received too late during runtime measurement.
61: Time taken to exchange characteristic data too long.

Remedy: - check the DRIVE-CLiQ wiring (interrupted cable, contacts, ...).
- check the electrical cabinet design and cable routing for EMC compliance
- if required, use another DRIVE-CLiQ socket (p9904).
- replace the component involved.

F33895 CU DRIVE-CLiQ: Cyclic data transfer error

Reaction: A_INFEED: NONE (OFF1, OFF2)
SERVO: ENCODER (DCBRAKE, NONE)
VECTOR: ENCODER (DCBRAKE, NONE)

Acknowledge: IMMEDIATELY

Cause: DRIVE-CLiQ communications error between the Control Unit and the encoder involved.
Fault value (r0949, hexadecimal):
0B: Synchronization error during alternating cyclic data transfer.

Remedy: - carry-out a POWER ON.
See also: p9915

F33896 CU DRIVE-CLiQ: Inconsistent component properties

Reaction: A_INFEED: NONE (OFF1, OFF2)
SERVO: OFF2 (DCBRAKE, ENCODER, NONE, OFF1, OFF3, STOP1, STOP2)
VECTOR: OFF2 (DCBRAKE, ENCODER, NONE, OFF1, OFF3, STOP1, STOP2)

Acknowledge: IMMEDIATELY

Cause: The properties of the DRIVE-CLiQ component, specified by the fault value, have changed in an incompatible fashion with respect to the run-up. One cause can be, e.g. that a DRIVE-CLiQ cable or DRIVE-CLiQ component has been replaced.
Fault value (r0949, decimal):
Component ID.

Remedy: - when replacing cables, only use cables with the same length as the original cables.
- when replacing components, use the same components and firmware releases.
- carry-out a POWER ON.

F33897 DRIVE-CLiQ: No communications to the components

Reaction: A_INFEED: NONE (OFF1, OFF2)
SERVO: ENCODER (DCBRAKE, NONE, OFF1, OFF2, OFF3, STOP1, STOP2)
VECTOR: ENCODER (DCBRAKE, NONE, OFF1, OFF2, OFF3, STOP1, STOP2)

Acknowledge: IMMEDIATELY (POWER ON)

Cause: Communications with the DRIVE-CLiQ component specified by the fault value is not possible.
One cause can be, e.g. that a DRIVE-CLiQ cable has been withdrawn.
Fault value (r0949, decimal):
Component ID.

Remedy: - check the DRIVE-CLiQ connections.
- carry-out a POWER ON.

© Siemens AG, 2005. All rights reserved

F33899 (N, A) Encoder 3: Unknown fault

Reaction: A_INFEED: OFF2 (DCBRAKE, NONE, OFF1, OFF3, STOP1, STOP2)
SERVO: ENCODER (DCBRAKE, NONE, OFF1, OFF2, OFF3, STOP1, STOP2)
VECTOR: ENCODER (DCBRAKE, NONE, OFF1, OFF2, OFF3, STOP1, STOP2)

Acknowledge: IMMEDIATELY (POWER ON)

Cause: A fault occurred on the Sensor Module for encoder 3 that cannot be interpreted by the Control Unit firmware.
This can occur if the firmware on the Sensor Module for encoder 3 is more recent than the firmware on the Control Unit.
Fault value (r0949, decimal):
Fault number.
If required, the significance of this new fault can be read about in a more recent description of the Control Unit.

Remedy: - replace the firmware on the Sensor Module by an older firmware version (r0148).
- upgrade the firmware on the Control Unit (r0018).

Reaction upon N: NONE

Acknowledge upon N: NONE

Reaction upon A: NONE

Acknowledge upon A: NONE

F33905 Encoder 3: Parameteriz. error

Reaction: A_INFEED: OFF2 (NONE, OFF1)
SERVO: ENCODER (DCBRAKE, NONE, OFF1, OFF2, OFF3, STOP1, STOP2)
VECTOR: ENCODER (DCBRAKE, NONE, OFF1, OFF2, OFF3, STOP1, STOP2)

Acknowledge: IMMEDIATELY

Cause: A parameter of encoder 1 was detected as being incorrect.
It is possible that the parameterized encoder type does not match the connected encoder.
The parameter involved can be determined as follows:
- determine the parameter number using the fault value (r0949).
- determine the parameter index (p0189).
Fault value (r0949, decimal):
Parameter number.

Remedy: - check whether the connected encoder type matches the encoder that has been parameterized.
- correct the parameter specified by the fault value (r0949) and p0189.

A33920 (F) Encoder 3: Temperature sensor fault

Reaction: NONE

Acknowledge: NONE

Cause: When evaluating the temperature sensor, an error occurred.
Alarm value (r2124, decimal):
1: Wire breakage or sensor not connected (KTY: R > 1630 Ohm).
2: Measured resistance too low (PTC: R < 20 Ohm, KTY: R < 50 Ohm).

Remedy: - check that the encoder cable is the correct type and is correctly connected.
- check the temperature sensor selection in p0600 to p0603.
- replace the Sensor Module (hardware defect or incorrect calibration data).

Reaction upon F: A_INFEED: NONE (DCBRAKE, OFF1, OFF2, OFF3, STOP1, STOP2)
SERVO: NONE (DCBRAKE, ENCODER, OFF1, OFF2, OFF3, STOP1, STOP2)
VECTOR: NONE (DCBRAKE, ENCODER, OFF1, OFF2, OFF3, STOP1, STOP2)

Acknowledge upon F: IMMEDIATELY

© Siemens AG, 2005. All rights reserved

A33999 (F, N) Encoder 3: Unknown alarm

Reaction: NONE

Acknowledge: NONE

Cause: A alarm has occurred on the Sensor Module for encoder 3 that cannot be interpreted by the Control Unit firmware. This can occur if the firmware on the Sensor Module for encoder 3 is more recent than the firmware on the Control Unit.
Alarm value (r2124, decimal):
Alarm number.
If required, the significance of this new alarm can be read about in a more recent description of the Control Unit.

Remedy: - replace the firmware on the Sensor Module by an older firmware version (r0148).
- upgrade the firmware on the Control Unit (r0018).

Reaction upon F: A_INFEED: NONE (DCBRAKE, OFF1, OFF2, OFF3, STOP1, STOP2)
SERVO: NONE (DCBRAKE, ENCODER, OFF1, OFF2, OFF3, STOP1, STOP2)
VECTOR: NONE (DCBRAKE, ENCODER, OFF1, OFF2, OFF3, STOP1, STOP2)

Acknowledge upon F: IMMEDIATELY (POWER ON)

Reaction upon N: NONE

Acknowledge upon N: NONE

F34207 (N, A) VSM: Temperature fault threshold exceeded

Reaction: A_INFEED: OFF2 (NONE, OFF1)
SERVO: NONE
VECTOR: NONE

Acknowledge: IMMEDIATELY (POWER ON)

Cause: The temperature (r3666) measured using the Voltage Sensing Module (VSM) has exceeded the threshold value (p3668).
This fault can only be initiated if the temperature evaluation was activated (p3665 = 2 for a KTY sensor or p3665 = 1 for a PTC sensor).
Fault value (r0949, decimal):
The hundred thousands and ten thousands position specifies the component number of the VSM where the fault occurred.

Remedy: - check the fan.
- reduce the power.

Reaction upon N: NONE

Acknowledge upon N: NONE

Reaction upon A: NONE

Acknowledge upon A: NONE

A34211 (F, N) VSM: Temperature alarm threshold exceeded

Reaction: NONE

Acknowledge: NONE

Cause: The temperature (r3666) measured using the Voltage Sensing Module (VSM) has exceeded the threshold value (p3667).
Alarm value (r2124, decimal):
The hundred thousands and ten thousands position specifies the component number of the VSM where the fault occurred.

Remedy: - check the fan.
- reduce the power.

© Siemens AG, 2005. All rights reserved

Reaction upon F: A_INFEED: NONE (OFF1, OFF2)
SERVO: NONE
VECTOR: NONE

Acknowledge upon F: IMMEDIATELY (POWER ON)

Reaction upon N: NONE

Acknowledge upon N: NONE

F34801 VSM DRIVE-CLiQ: Sign-of-life missing

Reaction: A_INFEED: OFF2 (NONE, OFF1)
SERVO: NONE (OFF1, OFF2, OFF3)
VECTOR: NONE (OFF1, OFF2, OFF3)

Acknowledge: IMMEDIATELY

Cause: A DRIVE-CLiQ communications error has occurred between the Control Unit and the Voltage Sensing Module.
Fault value (r0949, hexadecimal):
0A: The sign-of-life bit in the receive telegram is not set.

Remedy: - check the DRIVE-CLiQ connection.
- replace the Terminal Module.

F34802 VSM: Time slice overflow

Reaction: A_INFEED: OFF2 (NONE, OFF1)
SERVO: NONE (OFF1, OFF2, OFF3)
VECTOR: NONE (OFF1, OFF2, OFF3)

Acknowledge: IMMEDIATELY

Cause: Time slice overflow on the Voltage Sensing Module.

Remedy: Replace the Voltage Sensing Module.

F34803 VSM: Memory test

Reaction: A_INFEED: OFF2 (NONE, OFF1)
SERVO: NONE (OFF1, OFF2, OFF3)
VECTOR: NONE (OFF1, OFF2, OFF3)

Acknowledge: IMMEDIATELY

Cause: An error has occurred during the RAM test on the Voltage Sensing Module.

Remedy: - check whether the permissible ambient temperature for the Voltage Sensing Module is being maintained.
- replace the Voltage Sensing Module.

F34804 VSM: CRC

Reaction: A_INFEED: OFF2 (NONE, OFF1)
SERVO: NONE (OFF1, OFF2, OFF3)
VECTOR: NONE (OFF1, OFF2, OFF3)

Acknowledge: IMMEDIATELY

Cause: A checksum error has occurred when reading-out the program memory on the Voltage Sensing Module (VSM).

Remedy: - check whether the permissible ambient temperature for the Voltage Sensing Module is being maintained.
- replace the Voltage Sensing Module.

F34805 VSM: Incorrect EPROM checksum

Reaction: A_INFEED: OFF2 (NONE, OFF1)
SERVO: NONE (OFF1, OFF2, OFF3)
VECTOR: NONE (OFF1, OFF2, OFF3)

Acknowledge: IMMEDIATELY

Cause: Internal parameter data is corrupted.
Fault value (r0949, hexadecimal):
01: EEPROM access error.
02: Too many blocks in the EEPROM.

Remedy: - check whether the permissible ambient temperature for the module is maintained.
- replace the module.

© Siemens AG, 2005. All rights reserved

F34806 VSM: Initialization

Reaction: A_INFEED: OFF2 (NONE, OFF1)
SERVO: NONE (OFF1, OFF2, OFF3)
VECTOR: NONE (OFF1, OFF2, OFF3)

Acknowledge: IMMEDIATELY

Cause: For the Voltage Sensing Module (VSM), a fault has occurred while initializing.

Remedy: Replace the Voltage Sensing Module.

A34807 (F, N) VSM: Sequence control, time monitoring

Reaction: NONE

Acknowledge: NONE

Cause: Error, timeout in the sequence control on the Voltage Sensing Module (VSM).

Remedy: Replace the Voltage Sensing Module.

Reaction upon F: NONE

Acknowledge upon F: IMMEDIATELY (POWER ON)

Reaction upon N: NONE

Acknowledge upon N: NONE

F34820 VSM DRIVE-CLiQ: Telegram error

Reaction: A_INFEED: OFF2 (NONE, OFF1)
SERVO: NONE (OFF1, OFF2)
VECTOR: NONE (OFF1, OFF2)

Acknowledge: IMMEDIATELY

Cause: A DRIVE-CLiQ communications error has occurred between the Control Unit and the Voltage Sensing Module.
Fault value (r0949, hexadecimal):
01: CRC error.
02: Telegram is shorter than specified in the length byte or in the receive list.
03: Telegram is longer than specified in the length byte or in the receive list.
04: The length of the receive telegram does not match the receive list.
05: The type of the receive telegram does not match the receive list.
06: The address of the encoder in the telegram and in the receive list do not match.
07: The encoder expects a SYNC telegram, but the receive telegram is not a SYNC telegram.
08: The encoder does not expect a SYNC telegram, but the receive telegram is a SYNC telegram.
09: The error bit in the receive telegram is set.
10: The receive telegram is too early.

Remedy: - carry-out a POWER ON.
- check the electrical cabinet design and cable routing for EMC compliance
- check the DRIVE-CLiQ wiring (interrupted cable, contacts, ...).
See also: p9916

F34835 VSM DRIVE-CLiQ: Cyclic data transfer error

Reaction: A_INFEED: OFF2 (NONE, OFF1)
SERVO: NONE (OFF1, OFF2)
VECTOR: NONE (OFF1, OFF2)

Acknowledge: IMMEDIATELY

Cause: A DRIVE-CLiQ communications error has occurred between the Control Unit and the Voltage Sensing Module. The nodes do not send and receive in synchronism.
Fault value (r0949, hexadecimal):
21: The cyclic telegram has not been received.
22: Timeout in the telegram receive list.
40: Timeout in the telegram send list.

Remedy: - carry-out a POWER ON.
- replace the component involved.

© Siemens AG, 2005. All rights reserved

F34836 VSM DRIVE-CLiQ: Send error for DRIVE-CLiQ data

Reaction: A_INFEED: OFF2 (NONE, OFF1)
SERVO: NONE (OFF1, OFF2)
VECTOR: NONE (OFF1, OFF2)

Acknowledge: IMMEDIATELY

Cause: A DRIVE-CLiQ communications error has occurred between the Control Unit and the Voltage Sensing Module. Data were not able to be sent.
Fault value (r0949, hexadecimal):
41: Telegram type does not match send list.

Remedy: - carry-out a POWER ON.

F34837 VSM DRIVE-CLiQ: Component faulted

Reaction: A_INFEED: OFF2 (NONE, OFF1)
SERVO: NONE (OFF1, OFF2)
VECTOR: NONE (OFF1, OFF2)

Acknowledge: IMMEDIATELY

Cause: Fault detected on the DRIVE-CLiQ component involved. Faulty hardware cannot be excluded.
Fault value (r0949, hexadecimal):
20: Error in the telegram header.
23: Receive error: The telegram buffer memory contains an error.
42: Send error: The telegram buffer memory contains an error.
43: Send error: The telegram buffer memory contains an error.

Remedy: - check the DRIVE-CLiQ wiring (interrupted cable, contacts, ...).
- check the electrical cabinet design and cable routing for EMC compliance
- if required, use another DRIVE-CLiQ socket (p9904).
- replace the component involved.

F34845 VSM DRIVE-CLiQ: Cyclic data transfer error

Reaction: A_INFEED: OFF2 (NONE, OFF1)
SERVO: NONE (OFF1, OFF2)
VECTOR: NONE (OFF1, OFF2)

Acknowledge: IMMEDIATELY

Cause: A DRIVE-CLiQ communications error has occurred between the Control Unit and the Voltage Sensing Module (VSM).
Fault value (r0949, hexadecimal):
0B: Synchronization error during alternating cyclic data transfer.

Remedy: Carry-out a POWER ON.
See also: p9916

F34850 VSM: Internal software error

Reaction: OFF1 (NONE, OFF2, OFF3)

Acknowledge: POWER ON

Cause: An internal software error in the Voltage Sensing Module (VSM) has occurred.
Fault value (r0949, decimal):
1: Background time slice is blocked.
2: Checksum over the code memory is not OK.

Remedy: - replace the Voltage Sensing Module (VSM).
- if required, upgrade the firmware in the Voltage Sensing Module.
- contact the Hotline.

© Siemens AG, 2005. All rights reserved

F34851 CU DRIVE-CLiQ: Sign-of-life missing

Reaction: A_INFEED: OFF2 (NONE, OFF1)
SERVO: NONE (OFF1, OFF2)
VECTOR: NONE (OFF1, OFF2)

Acknowledge: IMMEDIATELY

Cause: A DRIVE-CLiQ communications error has occurred between the Control Unit and the power module involved. The DRIVE-CLiQ component did not set the sign of life to the Control Unit.
Fault value (r0949, hexadecimal):
0A: The sign-of-life bit in the receive telegram is not set.

Remedy: - upgrade the firmware of the component involved.

F34860 CU DRIVE-CLiQ: Telegram error

Reaction: A_INFEED: OFF2 (NONE, OFF1)
SERVO: NONE (OFF1, OFF2)
VECTOR: NONE (OFF1, OFF2)

Acknowledge: IMMEDIATELY

Cause: A DRIVE-CLiQ communications error has occurred between the Control Unit and the Voltage Sensing Module.
Fault value (r0949, hexadecimal):
11: CRC error and the receive telegram is too early.
01: CRC error.
12: The telegram is shorter than that specified in the length byte or in the receive list and the receive telegram is too early.
02: Telegram is shorter than specified in the length byte or in the receive list.
13: The telegram is longer than that specified in the length byte or in the receive list and the receive telegram is too early.
03: Telegram is longer than specified in the length byte or in the receive list.
14: The length of the receive telegram does not match the receive list and the receive telegram is too early.
04: The length of the receive telegram does not match the receive list.
15: The type of the receive telegram does not match the receive list and the receive telegram is too early.
05: The type of the receive telegram does not match the receive list.
16: The address of the Voltage Sensing Module in the telegram and in the receive list does not match and the receive telegram is too early.
06: The address of the Voltage Sensing Module in the telegram and in the receive list do not match.
19: The error bit in the receive telegram is set and the receive telegram is too early.
09: The error bit in the receive telegram is set.
10: The receive telegram is too early.

Remedy: - carry-out a POWER ON.
- check the electrical cabinet design and cable routing for EMC compliance
- check the DRIVE-CLiQ wiring (interrupted cable, contacts, ...).
See also: p9915

F34885 CU DRIVE-CLiQ: Cyclic data transfer error

Reaction: A_INFEED: OFF2 (NONE, OFF1)
SERVO: NONE (OFF1, OFF2)
VECTOR: NONE (OFF1, OFF2)

Acknowledge: IMMEDIATELY

Cause: A DRIVE-CLiQ communications error has occurred between the Control Unit and the Voltage Sensing Module. The nodes do not send and receive in synchronism.
Fault value (r0949, hexadecimal):
1A: Sign-of-life bit in the receive telegram not set and the receive telegram is too early.
21: The cyclic telegram has not been received.
22: Timeout in the telegram receive list.
40: Timeout in the telegram send list.
62: Error at the transition to cyclic operation.

Remedy: - check the power supply voltage of the component involved.
- carry-out a POWER ON.
- replace the component involved.
See also: p9915

© Siemens AG, 2005. All rights reserved

F34886 CU DRIVE-CLiQ: Error when sending DRIVE-CLiQ data

Reaction: A_INFEED: OFF2 (NONE, OFF1)
SERVO: NONE (OFF1, OFF2)
VECTOR: NONE (OFF1, OFF2)

Acknowledge: IMMEDIATELY

Cause: A DRIVE-CLiQ communications error has occurred between the Control Unit and the VSM involved. Data were not able to be sent.
Fault value (r0949, hexadecimal):
41: Telegram type does not match send list.

Remedy: - carry-out a POWER ON.

F34887 CU DRIVE-CLiQ: Component faulted

Reaction: A_INFEED: OFF2 (NONE, OFF1)
SERVO: NONE (OFF1, OFF2)
VECTOR: NONE (OFF1, OFF2)

Acknowledge: IMMEDIATELY

Cause: Fault detected on the DRIVE-CLiQ component involved. Faulty hardware cannot be excluded.
Fault value (r0949, hexadecimal):
20: Error in the telegram header.
23: Receive error: The telegram buffer memory contains an error.
42: Send error: The telegram buffer memory contains an error.
43: Send error: The telegram buffer memory contains an error.
60: Response received too late during runtime measurement.
61: Time taken to exchange characteristic data too long.

Remedy: - check the DRIVE-CLiQ wiring (interrupted cable, contacts, ...).
- check the electrical cabinet design and cable routing for EMC compliance
- if required, use another DRIVE-CLiQ socket (p9904).
- replace the component involved.

F34895 CU DRIVE-CLiQ: Cyclic data transfer error

Reaction: A_INFEED: OFF2 (NONE, OFF1)
SERVO: NONE (OFF1, OFF2)
VECTOR: NONE (OFF1, OFF2)

Acknowledge: IMMEDIATELY

Cause: A DRIVE-CLiQ communications error has occurred between the Control Unit and the Voltage Sensing Module.
Fault value (r0949, hexadecimal):
0B: Synchronization error during alternating cyclic data transfer.

Remedy: - carry-out a POWER ON.
See also: p9915

F34896 CU DRIVE-CLiQ: Inconsistent component properties

Reaction: A_INFEED: OFF2 (DCBRAKE, ENCODER, NONE, OFF1, OFF3, STOP1, STOP2)
SERVO: OFF2 (DCBRAKE, NONE, OFF1, OFF3, STOP1, STOP2)
VECTOR: OFF2 (DCBRAKE, NONE, OFF1, OFF3, STOP1, STOP2)

Acknowledge: IMMEDIATELY

Cause: The properties of the DRIVE-CLiQ component, specified by the fault value, have changed in an incompatible fashion with respect to the run-up. One cause can be, e.g. that a DRIVE-CLiQ cable or DRIVE-CLiQ component has been replaced.
Fault value (r0949, decimal):
Component ID.

Remedy: - when replacing cables, only use cables with the same length as the original cables.
- when replacing components, use the same components and firmware releases.
- carry-out a POWER ON.

© Siemens AG, 2005. All rights reserved

F34897 DRIVE-CLiQ: No communications to the components

Reaction: OFF2 (DCBRAKE, ENCODER, NONE, OFF1, OFF3, STOP1, STOP2)

Acknowledge: IMMEDIATELY (POWER ON)

Cause: Communications with the DRIVE-CLiQ component specified by the fault value is not possible.
One cause can be, e.g. that a DRIVE-CLiQ cable has been withdrawn.
Fault value (r0949, decimal):
Component ID.

Remedy: - check the DRIVE-CLiQ connections.
- carry-out a POWER ON.

F34899 (N, A) VSM: Unknown fault

Reaction: A_INFEED: NONE (OFF1, OFF2)
SERVO: NONE (OFF1, OFF2, OFF3)
VECTOR: NONE (OFF1, OFF2, OFF3)

Acknowledge: IMMEDIATELY (POWER ON)

Cause: A fault occurred on the Voltage Sensing Module that cannot be interpreted by the Control Unit firmware. This can occur if the firmware on the Voltage Sensing Module is more recent than the firmware on the Control Unit.
Fault value (r0949, decimal):
Fault number.
If required, the significance of this new fault can be read about in a more recent description of the Control Unit.

Remedy: - replace the firmware on the Voltage Sensing Module by an older firmware version (r0xyz).
- upgrade the firmware on the Control Unit (r0018).

Reaction upon N: NONE

Acknowledge upon N: NONE

Reaction upon A: NONE

Acknowledge upon A: NONE

A34903 (F, N) VSM: Error I2C bus

Reaction: NONE

Acknowledge: NONE

Cause: An error has occurred in while accessing via the internal TM I2C bus.

Remedy: Replace the Terminal Module.

Reaction upon F: A_INFEED: NONE (OFF1, OFF2)
SERVO: NONE
VECTOR: NONE

Acknowledge upon F: IMMEDIATELY (POWER ON)

Reaction upon N: NONE

Acknowledge upon N: NONE

A34904 (F, N) VSM: EEPROM

Reaction: NONE

Acknowledge: NONE

Cause: An error has occurred accessing the non-volatile memory on the Terminal Module.

Remedy: Replace the Terminal Module.

Reaction upon F: A_INFEED: NONE (OFF1, OFF2)
SERVO: NONE
VECTOR: NONE

Acknowledge upon F: IMMEDIATELY (POWER ON)

Reaction upon N: NONE

Acknowledge upon N: NONE

© Siemens AG, 2005. All rights reserved

A34905 (F, N) VSM: Parameter access

Reaction: NONE

Acknowledge: NONE

Cause: The Control Unit attempted to write an illegal parameter value into the Voltage Sensing Module (VSM).

Remedy: - check whether the firmware version of the VSM (r0158) matches the firmware version of Control Unit (r0018).
- if required, replace the Voltage Sensing Module.
Note:
The firmware versions that match each other are in the readme.txt file on the CompactFlash card.

Reaction upon F: A_INFEED: NONE (OFF1, OFF2)
SERVO: NONE
VECTOR: NONE

Acknowledge upon F: IMMEDIATELY (POWER ON)

Reaction upon N: NONE

Acknowledge upon N: NONE

A34920 (F, N) VSM: Temperature sensor fault

Reaction: NONE

Acknowledge: NONE

Cause: When evaluating the temperature sensor, an error occurred.
Alarm value (r2124, decimal):
1: Wire breakage or sensor not connected (KTY: R > 1630 Ohm).
2: Measured resistance too low (PTC: R < 20 Ohm, KTY: R < 50 Ohm).

Remedy: - check that the sensor is connected correctly.
- replace sensor.

Reaction upon F: A_INFEED: NONE (OFF1, OFF2)
SERVO: NONE
VECTOR: NONE

Acknowledge upon F: IMMEDIATELY (POWER ON)

Reaction upon N: NONE

Acknowledge upon N: NONE

A34999 (F, N) VSM: Unknown alarm

Reaction: NONE

Acknowledge: NONE

Cause: A fault occurred on the Voltage Sensing Module (VSM) an alarm has occurred that cannot be interpreted by the Control Unit firmware.
This can occur if the firmware on the module is more recent than the firmware on the Control Unit.
Alarm value (r2124, decimal):
Alarm number.
If required, the significance of this new alarm can be read about in a more recent description of the Control Unit.

Remedy: - replace the firmware on the Voltage Sensing Module by an older firmware version (r0xyz).
- upgrade the firmware on the Control Unit (r0018).

Reaction upon F: A_INFEED: NONE (OFF1, OFF2)
SERVO: NONE (OFF1, OFF2, OFF3)
VECTOR: NONE (OFF1, OFF2, OFF3)

Acknowledge upon F: IMMEDIATELY (POWER ON)

Reaction upon N: NONE

Acknowledge upon N: NONE

© Siemens AG, 2005. All rights reserved

A35200 (F, N) TM: Calibration data

Reaction: NONE

Acknowledge: NONE

Cause: An error was detected in the calibration data of the Terminal Module.
Alarm value (r2124, decimal):
The hundred thousands and ten thousands location specifies the component Id of the Terminal Module where the fault occurred.
The thousands location specifies whether the analog input 0 (=0) or analog output 1 (= 1) is involved.
The hundreds location specifies the fault type:
0: No calibration data available.
1: Offset too high (> 100 mV).
The tens and ones location specifies the number of the input involved.

Remedy: Power-down the unit and power-up again.
If the fault is still present, replace the module/board.

Reaction upon F: NONE

Acknowledge upon F: IMMEDIATELY (POWER ON)

Reaction upon N: NONE

Acknowledge upon N: NONE

F35207 (N, A) TM: Temperature fault threshold exceeded

Reaction: OFF2 (NONE, OFF1, OFF3)

Acknowledge: IMMEDIATELY (POWER ON)

Cause: The temperature measured using the temperature sensing of the Terminal Module (TM) (r4105) has exceeded the threshold value to initiate this fault (p4102[1]).
Please note that this fault can only be initiated if the temperature evaluation was activated (p4100 = 2 for KTY sensor or p4100 = 1 for PTC sensor).
Fault value (r0949, decimal):
The hundred thousands and ten thousands location specifies the component number of the TMxx where the fault occurred.
Alarm:
Please note that Fault F35207 only causes the drive to be shut down if there is at least one BICO interconnection between the drive and TM31.

Remedy: - allow the temperature sensor to cool down.
- if required, set the fault response to NONE (p2100, p2101).

Reaction upon N: NONE

Acknowledge upon N: NONE

Reaction upon A: NONE

Acknowledge upon A: NONE

A35211 (F, N) TM: Temperature alarm threshold exceeded

Reaction: NONE

Acknowledge: NONE

Cause: The temperature measured using the temperature sensing of the Terminal Module (TM) (r4105) has exceeded the threshold value to initiate this alarm (p4102[0]).
Alarm value (r2124, decimal):
The hundred thousands and ten thousands location specifies the component number of the TMxx where the fault occurred.

Remedy: Allow the temperature sensor to cool down.

Reaction upon F: NONE

Acknowledge upon F: IMMEDIATELY (POWER ON)

Reaction upon N: NONE

Acknowledge upon N: NONE

© Siemens AG, 2005. All rights reserved

F35220 (N, A) TM: Frequency limit reached for signal output

Reaction: OFF1 (NONE, OFF2, OFF3)

Acknowledge: IMMEDIATELY (POWER ON)

Cause: The signals output from the Terminal Module 41 (TM41) for tracks A/B have reached the limit frequency. The output signals are no longer in synchronism with the specified setpoint.

Remedy: - enter a lower speed setpoint (p1155).
- reduce the encoder pulse number (p0408).

Reaction upon N: NONE

Acknowledge upon N: NONE

Reaction upon A: NONE

Acknowledge upon A: NONE

F35221 (N, A) TM: Setpoint - actual value deviation, outside the tolerance range

Reaction: OFF1 (NONE, OFF2, OFF3)

Acknowledge: IMMEDIATELY (POWER ON)

Cause: The deviation between the setpoint and the output signals (track A/B) exceeds the tolerance of +/-3 %.

Remedy: - reduce the basic clock cycle (p0110, p0111).
- replace the module.

Reaction upon N: NONE

Acknowledge upon N: NONE

Reaction upon A: NONE

Acknowledge upon A: NONE

A35222 (F, N) TM: Encoder pulse number not permissible

Reaction: NONE

Acknowledge: NONE

Cause: The encoder pulse number entered does not match the permissible pulse number from a hardware perspective.
Fault value (r0949, decimal):
1: Encoder pulse number is too high.
2: Encoder pulse number is too low.
4: Encoder pulse number is less than the zero mark offset (p4426)

Remedy: Enter the encoder pulse number in the permissible range (p0408).

Reaction upon F: OFF1 (NONE, OFF2, OFF3)

Acknowledge upon F: IMMEDIATELY (POWER ON)

Reaction upon N: NONE

Acknowledge upon N: NONE

A35223 (F, N) TM: ZM offset not permissible

Reaction: NONE

Acknowledge: NONE

Cause: The entered zero mark offset is not permissible.
Fault value (r0949, decimal):
1: Zero mark offset is too high.
See also: p4426

Remedy: Enter the zero mark offset in the permissible range (p4426).

© Siemens AG, 2005. All rights reserved

Reaction upon F: OFF1 (NONE, OFF2, OFF3)
Acknowledge upon F: IMMEDIATELY (POWER ON)
Reaction upon N: NONE
Acknowledge upon N: NONE

A35801 (F, N) TM DRIVE-CLiQ: Sign-of-life missing

Reaction: NONE
Acknowledge: NONE
Cause: A DRIVE-CLiQ communications error has occurred between the Control Unit and the Terminal Module involved.
Alarm value (r2124, hexadecimal):
0A: The sign-of-life bit in the receive telegram is not set.
Remedy: - check the DRIVE-CLiQ connection.
- replace the component involved.
See also: p9916
Reaction upon F: NONE
Acknowledge upon F: IMMEDIATELY
Reaction upon N: NONE
Acknowledge upon N: NONE

A35802 (F, N) TM: Time slice overflow

Reaction: NONE
Acknowledge: NONE
Cause: Time slice overflow on Terminal Module.
Remedy: Replace the Terminal Module.
Reaction upon F: NONE
Acknowledge upon F: IMMEDIATELY (POWER ON)
Reaction upon N: NONE
Acknowledge upon N: NONE

A35803 (F, N) TM: Memory test

Reaction: NONE
Acknowledge: NONE
Cause: An error has occurred in the RAM test on the Terminal Module.
Remedy: - check whether the permissible ambient temperature for the Terminal Module is being maintained.
- replace the Terminal Module.
Reaction upon F: NONE
Acknowledge upon F: IMMEDIATELY (POWER ON)
Reaction upon N: NONE
Acknowledge upon N: NONE

A35804 (F, N) TM: CRC

Reaction: NONE
Acknowledge: NONE
Cause: A checksum error has occurred when reading-out the program memory on the Terminal Module.
Fault value (r0949, hexadecimal):
Difference between the checksum at POWER ON and the actual checksum.
Remedy: - check whether the permissible ambient temperature for the Terminal Module is being maintained.
- replace the Terminal Module.

© Siemens AG, 2005. All rights reserved

Reaction upon F:	NONE
Acknowledge upon F:	IMMEDIATELY (POWER ON)
Reaction upon N:	NONE
Acknowledge upon N:	NONE

A35805 (F, N) TM: Incorrect EPROM checksum

Reaction: NONE

Acknowledge: NONE

Cause: Internal parameter data is corrupted.
Alarm value (r2124, hexadecimal):
01: EEPROM access error.
02: Too many blocks in the EEPROM.

Remedy: - check whether the permissible ambient temperature for the module is maintained.
- replace the module.

Reaction upon F:	NONE
Acknowledge upon F:	IMMEDIATELY (POWER ON)
Reaction upon N:	NONE
Acknowledge upon N:	NONE

A35807 (F, N) TM: Sequence control, time monitoring

Reaction: NONE

Acknowledge: NONE

Cause: Error, timeout, sequence control on the Terminal Module.

Remedy: Replace the Terminal Module.

Reaction upon F:	NONE
Acknowledge upon F:	IMMEDIATELY (POWER ON)
Reaction upon N:	NONE
Acknowledge upon N:	NONE

F35820 TM DRIVE-CLiQ: Telegram error

Reaction: OFF1 (OFF2)

Acknowledge: IMMEDIATELY

Cause: A DRIVE-CLiQ communications error has occurred between the Control Unit and the Terminal Module involved.
Fault value (r0949, hexadecimal):
01: CRC error.
02: Telegram is shorter than specified in the length byte or in the receive list.
03: Telegram is longer than specified in the length byte or in the receive list.
04: The length of the receive telegram does not match the receive list.
05: The type of the receive telegram does not match the receive list.
06: The address of the Terminal Module in the telegram and in the receive list do not match.
07: Terminal Module expects a SYNC telegram, but the receive telegram is not a SYNC telegram.
08: Terminal Module does not expect a SYNC telegram, but the receive telegram is a SYNC telegram.
09: The error bit in the receive telegram is set.
10: The receive telegram is too early.

Remedy: - carry-out a POWER ON.
- check the electrical cabinet design and cable routing for EMC compliance
- check the DRIVE-CLiQ wiring (interrupted cable, contacts, ...).
See also: p9916

© Siemens AG, 2005. All rights reserved

F35835 TM DRIVE-CLiQ: Cyclic data transfer error

Reaction: OFF1 (OFF2)

Acknowledge: IMMEDIATELY

Cause: A DRIVE-CLiQ communications error has occurred between the Control Unit and the Terminal Module involved. The nodes do not send and receive in synchronism.
Fault value (r0949, hexadecimal):
21: The cyclic telegram has not been received.
22: Timeout in the telegram receive list.
40: Timeout in the telegram send list.

Remedy: - carry-out a POWER ON.
- replace the component involved.
See also: p9916

F35836 TM DRIVE-CLiQ: Send error for DRIVE-CLiQ data

Reaction: OFF1 (OFF2)

Acknowledge: IMMEDIATELY

Cause: A DRIVE-CLiQ communications error has occurred between the Control Unit and the Terminal Module involved. Data were not able to be sent.
Fault value (r0949, hexadecimal):
41: Telegram type does not match send list.

Remedy: - carry-out a POWER ON.

F35837 TM DRIVE-CLiQ: Component faulted

Reaction: OFF1 (OFF2)

Acknowledge: IMMEDIATELY

Cause: Fault detected on the DRIVE-CLiQ component involved. Faulty hardware cannot be excluded.
Fault value (r0949, hexadecimal):
20: Error in the telegram header.
23: Receive error: The telegram buffer memory contains an error.
42: Send error: The telegram buffer memory contains an error.
43: Send error: The telegram buffer memory contains an error.

Remedy: - check the DRIVE-CLiQ wiring (interrupted cable, contacts, ...).
- check the electrical cabinet design and cable routing for EMC compliance
- if required, use another DRIVE-CLiQ socket (p9904).
- replace the component involved.

F35845 TM DRIVE-CLiQ: Cyclic data transfer error

Reaction: OFF1 (OFF2)

Acknowledge: IMMEDIATELY

Cause: A DRIVE-CLiQ communications error has occurred between the Control Unit and the Terminal Module (TM) involved.
Fault value (r0949, hexadecimal):
0B: Synchronization error during alternating cyclic data transfer.

Remedy: Carry-out a POWER ON.
See also: p9916

F35850 TM: Internal software error

Reaction: OFF1 (NONE, OFF2, OFF3)

Acknowledge: POWER ON

Cause: An internal software error in the Terminal Module (TM) has occurred.
Fault value (r0949, decimal):
1: Background time slice is blocked.
2: Checksum over the code memory is not OK.

Remedy: - replace the Terminal Module (TM).
- if required, upgrade the firmware in the Terminal Module.
- contact the Hotline.

© Siemens AG, 2005. All rights reserved

F35851 CU DRIVE-CLiQ: Sign-of-life missing

Reaction: OFF1 (OFF2)

Acknowledge: IMMEDIATELY

Cause: A DRIVE-CLiQ communications error has occurred between the Control Unit and the power module involved. The DRIVE-CLiQ component did not set the sign of life to the Control Unit.
Fault value (r0949, hexadecimal):
0A: The sign-of-life bit in the receive telegram is not set.

Remedy: - upgrade the firmware of the component involved.

F35860 CU DRIVE-CLiQ: Telegram error

Reaction: OFF1 (OFF2)

Acknowledge: IMMEDIATELY

Cause: A DRIVE-CLiQ communications error has occurred between the Control Unit and the Terminal Module involved.
Fault value (r0949, hexadecimal):
11: CRC error and the receive telegram is too early.
01: CRC error.
12: The telegram is shorter than that specified in the length byte or in the receive list and the receive telegram is too early.
02: Telegram is shorter than specified in the length byte or in the receive list.
13: The telegram is longer than that specified in the length byte or in the receive list and the receive telegram is too early.
03: Telegram is longer than specified in the length byte or in the receive list.
14: The length of the receive telegram does not match the receive list and the receive telegram is too early.
04: The length of the receive telegram does not match the receive list.
15: The type of the receive telegram does not match the receive list and the receive telegram is too early.
05: The type of the receive telegram does not match the receive list.
16: The address of the Terminal Module in the telegram and in the receive list does not match and the receive telegram is too early.
06: The address of the Terminal Module in the telegram and in the receive list do not match.
19: The error bit in the receive telegram is set and the receive telegram is too early.
09: The error bit in the receive telegram is set.
10: The receive telegram is too early.

Remedy: - carry-out a POWER ON.
- check the electrical cabinet design and cable routing for EMC compliance
- check the DRIVE-CLiQ wiring (interrupted cable, contacts, ...).
See also: p9915

F35885 CU DRIVE-CLiQ: Cyclic data transfer error

Reaction: OFF1 (OFF2)

Acknowledge: IMMEDIATELY

Cause: A DRIVE-CLiQ communications error has occurred between the Control Unit and the Terminal Module involved. The nodes do not send and receive in synchronism.
Fault value (r0949, hexadecimal):
1A: Sign-of-life bit in the receive telegram not set and the receive telegram is too early.
21: The cyclic telegram has not been received.
22: Timeout in the telegram receive list.
40: Timeout in the telegram send list.
62: Error at the transition to cyclic operation.

Remedy: - check the power supply voltage of the component involved.
- carry-out a POWER ON.
- replace the component involved.
See also: p9915

© Siemens AG, 2005. All rights reserved

F35886 CU DRIVE-CLiQ: Error when sending DRIVE-CLiQ data

Reaction: OFF1 (OFF2)

Acknowledge: IMMEDIATELY

Cause: A DRIVE-CLiQ communications error has occurred between the Control Unit and the Terminal Module involved. Data were not able to be sent.
Fault value (r0949, hexadecimal):
41: Telegram type does not match send list.

Remedy: - carry-out a POWER ON.

F35887 CU DRIVE-CLiQ: Component faulted

Reaction: OFF1 (OFF2)

Acknowledge: IMMEDIATELY

Cause: Fault detected on the DRIVE-CLiQ component involved. Faulty hardware cannot be excluded.
Fault value (r0949, hexadecimal):
20: Error in the telegram header.
23: Receive error: The telegram buffer memory contains an error.
42: Send error: The telegram buffer memory contains an error.
43: Send error: The telegram buffer memory contains an error.
60: Response received too late during runtime measurement.
61: Time taken to exchange characteristic data too long.

Remedy: - check the DRIVE-CLiQ wiring (interrupted cable, contacts, ...).
- check the electrical cabinet design and cable routing for EMC compliance
- if required, use another DRIVE-CLiQ socket (p9904).
- replace the component involved.

F35895 CU DRIVE-CLiQ: Cyclic data transfer error

Reaction: OFF1 (OFF2)

Acknowledge: IMMEDIATELY

Cause: A DRIVE-CLiQ communications error has occurred between the Control Unit and the Terminal Module involved.
Fault value (r0949, hexadecimal):
0B: Synchronization error during alternating cyclic data transfer.

Remedy: - carry-out a POWER ON.
See also: p9915

F35896 CU DRIVE-CLiQ: Inconsistent component properties

Reaction: A_INFEED: OFF2 (NONE, OFF1)
SERVO: OFF2 (DCBRAKE, NONE, OFF1, OFF3, STOP1, STOP2)
VECTOR: OFF2 (DCBRAKE, NONE, OFF1, OFF3, STOP1, STOP2)

Acknowledge: IMMEDIATELY

Cause: The properties of the DRIVE-CLiQ component, specified by the fault value, have changed in an incompatible fashion with respect to the run-up. One cause can be, e.g. that a DRIVE-CLiQ cable or DRIVE-CLiQ component has been replaced.
Fault value (r0949, decimal):
Component ID.

Remedy: - when replacing cables, only use cables with the same length as the original cables.
- when replacing components, use the same components and firmware releases.
- carry-out a POWER ON.

© Siemens AG, 2005. All rights reserved

F35897	DRIVE-CLiQ: No communications to the components
Reaction:	A_INFEED: OFF2 (NONE, OFF1) SERVO: OFF2 (DCBRAKE, ENCODER, NONE, OFF1, OFF3, STOP1, STOP2) VECTOR: OFF2 (DCBRAKE, ENCODER, NONE, OFF1, OFF3, STOP1, STOP2)
Acknowledge:	IMMEDIATELY (POWER ON)
Cause:	Communications with the DRIVE-CLiQ component specified by the fault value is not possible. One cause can be, e.g. that a DRIVE-CLiQ cable has been withdrawn. Fault value (r0949, decimal): Component ID.
Remedy:	- check the DRIVE-CLiQ connections. - carry-out a POWER ON.

F35899 (N, A)	TM: Unknown fault
Reaction:	NONE (DCBRAKE, OFF1, OFF2, OFF3, STOP1, STOP2)
Acknowledge:	IMMEDIATELY (POWER ON)
Cause:	A fault has occurred on the Terminal Module that cannot be interpreted by the Control Unit firmware. This can occur if the firmware on the Terminal Module is more recent than the firmware on the Control Unit. Fault value (r0949, decimal): Fault number. If required, the significance of this new fault can be read about in a more recent description of the Control Unit.
Remedy:	- replace the firmware on the Terminal Module by an older firmware version (r0158). - upgrade the firmware on the Control Unit (r0018).
Reaction upon N:	NONE
Acknowledge upon N:	NONE
Reaction upon A:	NONE
Acknowledge upon A:	NONE

A35903 (F, N)	TM: Error I2C bus
Reaction:	NONE
Acknowledge:	NONE
Cause:	An error has occurred while accessing the internal I2C bus of the Terminal Module.
Remedy:	Replace the Terminal Module.
Reaction upon F:	NONE
Acknowledge upon F:	IMMEDIATELY (POWER ON)
Reaction upon N:	NONE
Acknowledge upon N:	NONE

A35904 (F, N)	TM: EEPROM
Reaction:	NONE
Acknowledge:	NONE
Cause:	An error has occurred accessing the non-volatile memory on the Terminal Module.
Remedy:	Replace the Terminal Module.
Reaction upon F:	NONE
Acknowledge upon F:	IMMEDIATELY (POWER ON)
Reaction upon N:	NONE
Acknowledge upon N:	NONE

© Siemens AG, 2005. All rights reserved

A35905 (F, N) TM: Parameter access

Reaction: NONE

Acknowledge: NONE

Cause: The Control Unit attempted to write an illegal parameter value into the Terminal Module.

Remedy: - check whether the firmware version of the TM (r0158) matches the firmware version of Control Unit (r0018).
- if required, replace the Terminal Module.
Note:
The firmware versions that match each other are in the readme.txt file on the CompactFlash card.

Reaction upon F: NONE

Acknowledge upon F: IMMEDIATELY (POWER ON)

Reaction upon N: NONE

Acknowledge upon N: NONE

A35906 (F, N) TM: 24 V power supply missing

Reaction: NONE

Acknowledge: NONE

Cause: The 24 V power supply for the digital outputs is missing.
Alarm value (r2124, hexadecimal):
01: TM17 24 V power supply for DI/DO 0 ... 7 missing.
02: TM17 24 V power supply for DI/DO 8 ... 15 missing.
04: TM15 24 V power supply for DI/DO 0 ... 7 (X520) missing.
08: TM15 24 V power supply for DI/DO 8 ... 15 (X521) missing.
10: TM15 24 V power supply for DI/DO 16 ... 23 (X522) missing.
20: TM41 24 V power supply for DI/DO 0 ... 3 missing.

Remedy: Check the terminals for the power supply voltage (L1+, L2+, L3+, M).

Reaction upon F: NONE

Acknowledge upon F: IMMEDIATELY (POWER ON)

Reaction upon N: NONE

Acknowledge upon N: NONE

A35907 (F, N) TM: Hardware initialization unsuccessful

Reaction: NONE

Acknowledge: NONE

Cause: The Terminal Module was not successfully initialized.
Alarm value (r2124, hexadecimal):
01: TM17 or TM41 - incorrect configuration request.
02: TM17 or TM41 - programming not successful.
04: TM17 or TM41 - invalid time stamp

Remedy: Carry-out a POWER ON.

Reaction upon F: NONE

Acknowledge upon F: IMMEDIATELY (POWER ON)

Reaction upon N: NONE

Acknowledge upon N: NONE

A35910 (F, N) TM: Module overtemperature

Reaction: NONE

Acknowledge: NONE

Cause: The temperature in the module has exceeded the highest permissible limit.

Remedy: - reduce the ambient temperature.
- replace the Terminal Module.

© Siemens AG, 2005. All rights reserved

Reaction upon F:	NONE
Acknowledge upon F:	IMMEDIATELY (POWER ON)
Reaction upon N:	NONE
Acknowledge upon N:	NONE

A35911 (F, N) TM: PROFIBUS: Clock synchronous operation sign-of-life missing

Reaction:	NONE
Acknowledge:	NONE
Cause:	The maximum permissible number of errors in the master sign-of-life (clock synchronous PROFIBUS) has been exceeded in cyclic operation. When the alarm is output, the module outputs are reset up to the next synchronization.
Remedy:	- check the physical bus configuration (terminating resistor, shielding, etc.). - check the interconnection of the master sign-of-life (r4201 via p0915). - check whether the master correctly sends the sign-of-life (e.g. set-up a trace with r4201.12 ... r4201.15 and trigger signal r4301.9). - check the bus and master for utilization level (e.g. bus cycle time Tdp was set too short).
Reaction upon F:	NONE
Acknowledge upon F:	IMMEDIATELY (POWER ON)
Reaction upon N:	NONE
Acknowledge upon N:	NONE

A35920 (F, N) TM: Temperature sensor fault

Reaction:	NONE
Acknowledge:	NONE
Cause:	When evaluating the temperature sensor, an error occurred. Alarm value (r2124, decimal): 1: Wire breakage or sensor not connected (KTY: R > 1630 Ohm). 2: Measured resistance too low (PTC: R < 20 Ohm, KTY: R < 50 Ohm).
Remedy:	- check that the sensor is connected correctly. - replace sensor.
Reaction upon F:	NONE
Acknowledge upon F:	IMMEDIATELY (POWER ON)
Reaction upon N:	NONE
Acknowledge upon N:	NONE

A35999 (F, N) TM: Unknown alarm

Reaction:	NONE
Acknowledge:	NONE
Cause:	An alarm has occurred on the Terminal Module that cannot be interpreted by the Control Unit firmware. This can occur if the firmware on the Terminal Module is more recent than the firmware on the Control Unit. Alarm value (r2124, decimal): Alarm number. If required, the significance of this new alarm can be read about in a more recent description of the Control Unit.
Remedy:	- replace the firmware on the Terminal Module by an older firmware version (r0158). - upgrade the firmware on the Control Unit (r0018).
Reaction upon F:	NONE (DCBRAKE, OFF1, OFF2, OFF3, STOP1, STOP2)
Acknowledge upon F:	IMMEDIATELY (POWER ON)
Reaction upon N:	NONE
Acknowledge upon N:	NONE

© Siemens AG, 2005. All rights reserved

F40000 **Fault on another drive object**

Reaction: NONE

Acknowledge: IMMEDIATELY

Cause: A fault has occurred for a drive object with an object number greater than 62.
Fault value (r0949, decimal):
Drive object number with fault.

Remedy: Evaluate the fault buffer of the object specified in the fault value.

F40002 **Fault on drive object with object number 2**

Reaction: NONE

Acknowledge: IMMEDIATELY

Cause: A fault has occurred for the drive object with this object number.
Fault value (r0949, decimal):
First fault that has occurred for this drive object.

Remedy: Evaluate the fault buffer of the specified object.

F40003 **Fault on drive object with object number 3**

Reaction: NONE

Acknowledge: IMMEDIATELY

Cause: A fault has occurred for the drive object with this object number.
Fault value (r0949, decimal):
First fault that has occurred for this drive object.

Remedy: Evaluate the fault buffer of the specified object.

F40004 **Fault on drive object with object number 4**

Reaction: NONE

Acknowledge: IMMEDIATELY

Cause: A fault has occurred for the drive object with this object number.
Fault value (r0949, decimal):
First fault that has occurred for this drive object.

Remedy: Evaluate the fault buffer of the specified object.

F40005 **Fault on drive object with object number 5**

Reaction: NONE

Acknowledge: IMMEDIATELY

Cause: A fault has occurred for the drive object with this object number.
Fault value (r0949, decimal):
First fault that has occurred for this drive object.

Remedy: Evaluate the fault buffer of the specified object.

F40006 **Fault on drive object with object number 6**

Reaction: NONE

Acknowledge: IMMEDIATELY

Cause: A fault has occurred for the drive object with this object number.
Fault value (r0949, decimal):
First fault that has occurred for this drive object.

Remedy: Evaluate the fault buffer of the specified object.

F40007 **Fault on drive object with object number 7**

Reaction: NONE

Acknowledge: IMMEDIATELY

Cause: A fault has occurred for the drive object with this object number.
Fault value (r0949, decimal):
First fault that has occurred for this drive object.

Remedy: Evaluate the fault buffer of the specified object.

© Siemens AG, 2005. All rights reserved

F40008 **Fault on drive object with object number 8**

Reaction: NONE

Acknowledge: IMMEDIATELY

Cause: A fault has occurred for the drive object with this object number.
Fault value (r0949, decimal):
First fault that has occurred for this drive object.

Remedy: Evaluate the fault buffer of the specified object.

F40009 **Fault on drive object with object number 9**

Reaction: NONE

Acknowledge: IMMEDIATELY

Cause: A fault has occurred for the drive object with this object number.
Fault value (r0949, decimal):
First fault that has occurred for this drive object.

Remedy: Evaluate the fault buffer of the specified object.

F40010 **Fault on drive object with object number 10**

Reaction: NONE

Acknowledge: IMMEDIATELY

Cause: A fault has occurred for the drive object with this object number.
Fault value (r0949, decimal):
First fault that has occurred for this drive object.

Remedy: Evaluate the fault buffer of the specified object.

F40011 **Fault on drive object with object number 11**

Reaction: NONE

Acknowledge: IMMEDIATELY

Cause: A fault has occurred for the drive object with this object number.
Fault value (r0949, decimal):
First fault that has occurred for this drive object.

Remedy: Evaluate the fault buffer of the specified object.

F40012 **Fault on drive object with object number 12**

Reaction: NONE

Acknowledge: IMMEDIATELY

Cause: A fault has occurred for the drive object with this object number.
Fault value (r0949, decimal):
First fault that has occurred for this drive object.

Remedy: Evaluate the fault buffer of the specified object.

F40013 **Fault on drive object with object number 13**

Reaction: NONE

Acknowledge: IMMEDIATELY

Cause: A fault has occurred for the drive object with this object number.
Fault value (r0949, decimal):
First fault that has occurred for this drive object.

Remedy: Evaluate the fault buffer of the specified object.

F40014 **Fault on drive object with object number 14**

Reaction: NONE

Acknowledge: IMMEDIATELY

Cause: A fault has occurred for the drive object with this object number.
Fault value (r0949, decimal):
First fault that has occurred for this drive object.

Remedy: Evaluate the fault buffer of the specified object.

© Siemens AG, 2005. All rights reserved

F40015 **Fault on drive object with object number 15**

Reaction: NONE

Acknowledge: IMMEDIATELY

Cause: A fault has occurred for the drive object with this object number.
Fault value (r0949, decimal):
First fault that has occurred for this drive object.

Remedy: Evaluate the fault buffer of the specified object.

F40016 **Fault on drive object with object number 16**

Reaction: NONE

Acknowledge: IMMEDIATELY

Cause: A fault has occurred for the drive object with this object number.
Fault value (r0949, decimal):
First fault that has occurred for this drive object.

Remedy: Evaluate the fault buffer of the specified object.

F40017 **Fault on drive object with object number 17**

Reaction: NONE

Acknowledge: IMMEDIATELY

Cause: A fault has occurred for the drive object with this object number.
Fault value (r0949, decimal):
First fault that has occurred for this drive object.

Remedy: Evaluate the fault buffer of the specified object.

F40018 **Fault on drive object with object number 18**

Reaction: NONE

Acknowledge: IMMEDIATELY

Cause: A fault has occurred for the drive object with this object number.
Fault value (r0949, decimal):
First fault that has occurred for this drive object.

Remedy: Evaluate the fault buffer of the specified object.

F40019 **Fault on drive object with object number 19**

Reaction: NONE

Acknowledge: IMMEDIATELY

Cause: A fault has occurred for the drive object with this object number.
Fault value (r0949, decimal):
First fault that has occurred for this drive object.

Remedy: Evaluate the fault buffer of the specified object.

F40020 **Fault on drive object with object number 20**

Reaction: NONE

Acknowledge: IMMEDIATELY

Cause: A fault has occurred for the drive object with this object number.
Fault value (r0949, decimal):
First fault that has occurred for this drive object.

Remedy: Evaluate the fault buffer of the specified object.

F40021 **Fault on drive object with object number 21**

Reaction: NONE

Acknowledge: IMMEDIATELY

Cause: A fault has occurred for the drive object with this object number.
Fault value (r0949, decimal):
First fault that has occurred for this drive object.

Remedy: Evaluate the fault buffer of the specified object.

© Siemens AG, 2005. All rights reserved

F40022 **Fault on drive object with object number 22**

Reaction: NONE

Acknowledge: IMMEDIATELY

Cause: A fault has occurred for the drive object with this object number.
Fault value (r0949, decimal):
First fault that has occurred for this drive object.

Remedy: Evaluate the fault buffer of the specified object.

F40023 **Fault on drive object with object number 23**

Reaction: NONE

Acknowledge: IMMEDIATELY

Cause: A fault has occurred for the drive object with this object number.
Fault value (r0949, decimal):
First fault that has occurred for this drive object.

Remedy: Evaluate the fault buffer of the specified object.

F40024 **Fault on drive object with object number 24**

Reaction: NONE

Acknowledge: IMMEDIATELY

Cause: A fault has occurred for the drive object with this object number.
Fault value (r0949, decimal):
First fault that has occurred for this drive object.

Remedy: Evaluate the fault buffer of the specified object.

F40025 **Fault on drive object with object number 25**

Reaction: NONE

Acknowledge: IMMEDIATELY

Cause: A fault has occurred for the drive object with this object number.
Fault value (r0949, decimal):
First fault that has occurred for this drive object.

Remedy: Evaluate the fault buffer of the specified object.

F40026 **Fault on drive object with object number 26**

Reaction: NONE

Acknowledge: IMMEDIATELY

Cause: A fault has occurred for the drive object with this object number.
Fault value (r0949, decimal):
First fault that has occurred for this drive object.

Remedy: Evaluate the fault buffer of the specified object.

F40027 **Fault on drive object with object number 27**

Reaction: NONE

Acknowledge: IMMEDIATELY

Cause: A fault has occurred for the drive object with this object number.
Fault value (r0949, decimal):
First fault that has occurred for this drive object.

Remedy: Evaluate the fault buffer of the specified object.

F40028 **Fault on drive object with object number 28**

Reaction: NONE

Acknowledge: IMMEDIATELY

Cause: A fault has occurred for the drive object with this object number.
Fault value (r0949, decimal):
First fault that has occurred for this drive object.

Remedy: Evaluate the fault buffer of the specified object.

© Siemens AG, 2005. All rights reserved

F40029 **Fault on drive object with object number 29**

Reaction: NONE

Acknowledge: IMMEDIATELY

Cause: A fault has occurred for the drive object with this object number.
Fault value (r0949, decimal):
First fault that has occurred for this drive object.

Remedy: Evaluate the fault buffer of the specified object.

F40030 **Fault on drive object with object number 30**

Reaction: NONE

Acknowledge: IMMEDIATELY

Cause: A fault has occurred for the drive object with this object number.
Fault value (r0949, decimal):
First fault that has occurred for this drive object.

Remedy: Evaluate the fault buffer of the specified object.

F40031 **Fault on drive object with object number 31**

Reaction: NONE

Acknowledge: IMMEDIATELY

Cause: A fault has occurred for the drive object with this object number.
Fault value (r0949, decimal):
First fault that has occurred for this drive object.

Remedy: Evaluate the fault buffer of the specified object.

F40032 **Fault on drive object with object number 32**

Reaction: NONE

Acknowledge: IMMEDIATELY

Cause: A fault has occurred for the drive object with this object number.
Fault value (r0949, decimal):
First fault that has occurred for this drive object.

Remedy: Evaluate the fault buffer of the specified object.

F40033 **Fault on drive object with object number 33**

Reaction: NONE

Acknowledge: IMMEDIATELY

Cause: A fault has occurred for the drive object with this object number.
Fault value (r0949, decimal):
First fault that has occurred for this drive object.

Remedy: Evaluate the fault buffer of the specified object.

F40034 **Fault on drive object with object number 34**

Reaction: NONE

Acknowledge: IMMEDIATELY

Cause: A fault has occurred for the drive object with this object number.
Fault value (r0949, decimal):
First fault that has occurred for this drive object.

Remedy: Evaluate the fault buffer of the specified object.

F40035 **Fault on drive object with object number 35**

Reaction: NONE

Acknowledge: IMMEDIATELY

Cause: A fault has occurred for the drive object with this object number.
Fault value (r0949, decimal):
First fault that has occurred for this drive object.

Remedy: Evaluate the fault buffer of the specified object.

© Siemens AG, 2005. All rights reserved

F40036 **Fault on drive object with object number 36**

Reaction: NONE

Acknowledge: IMMEDIATELY

Cause: A fault has occurred for the drive object with this object number.
Fault value (r0949, decimal):
First fault that has occurred for this drive object.

Remedy: Evaluate the fault buffer of the specified object.

F40037 **Fault on drive object with object number 37**

Reaction: NONE

Acknowledge: IMMEDIATELY

Cause: A fault has occurred for the drive object with this object number.
Fault value (r0949, decimal):
First fault that has occurred for this drive object.

Remedy: Evaluate the fault buffer of the specified object.

F40038 **Fault on drive object with object number 38**

Reaction: NONE

Acknowledge: IMMEDIATELY

Cause: A fault has occurred for the drive object with this object number.
Fault value (r0949, decimal):
First fault that has occurred for this drive object.

Remedy: Evaluate the fault buffer of the specified object.

F40039 **Fault on drive object with object number 39**

Reaction: NONE

Acknowledge: IMMEDIATELY

Cause: A fault has occurred for the drive object with this object number.
Fault value (r0949, decimal):
First fault that has occurred for this drive object.

Remedy: Evaluate the fault buffer of the specified object.

F40040 **Fault on drive object with object number 40**

Reaction: NONE

Acknowledge: IMMEDIATELY

Cause: A fault has occurred for the drive object with this object number.
Fault value (r0949, decimal):
First fault that has occurred for this drive object.

Remedy: Evaluate the fault buffer of the specified object.

F40041 **Fault on drive object with object number 41**

Reaction: NONE

Acknowledge: IMMEDIATELY

Cause: A fault has occurred for the drive object with this object number.
Fault value (r0949, decimal):
First fault that has occurred for this drive object.

Remedy: Evaluate the fault buffer of the specified object.

F40042 **Fault on drive object with object number 42**

Reaction: NONE

Acknowledge: IMMEDIATELY

Cause: A fault has occurred for the drive object with this object number.
Fault value (r0949, decimal):
First fault that has occurred for this drive object.

Remedy: Evaluate the fault buffer of the specified object.

© Siemens AG, 2005. All rights reserved

F40043 **Fault on drive object with object number 43**

Reaction: NONE

Acknowledge: IMMEDIATELY

Cause: A fault has occurred for the drive object with this object number.
Fault value (r0949, decimal):
First fault that has occurred for this drive object.

Remedy: Evaluate the fault buffer of the specified object.

F40044 **Fault on drive object with object number 44**

Reaction: NONE

Acknowledge: IMMEDIATELY

Cause: A fault has occurred for the drive object with this object number.
Fault value (r0949, decimal):
First fault that has occurred for this drive object.

Remedy: Evaluate the fault buffer of the specified object.

F40045 **Fault on drive object with object number 45**

Reaction: NONE

Acknowledge: IMMEDIATELY

Cause: A fault has occurred for the drive object with this object number.
Fault value (r0949, decimal):
First fault that has occurred for this drive object.

Remedy: Evaluate the fault buffer of the specified object.

F40046 **Fault on drive object with object number 46**

Reaction: NONE

Acknowledge: IMMEDIATELY

Cause: A fault has occurred for the drive object with this object number.
Fault value (r0949, decimal):
First fault that has occurred for this drive object.

Remedy: Evaluate the fault buffer of the specified object.

F40047 **Fault on drive object with object number 47**

Reaction: NONE

Acknowledge: IMMEDIATELY

Cause: A fault has occurred for the drive object with this object number.
Fault value (r0949, decimal):
First fault that has occurred for this drive object.

Remedy: Evaluate the fault buffer of the specified object.

F40048 **Fault on drive object with object number 48**

Reaction: NONE

Acknowledge: IMMEDIATELY

Cause: A fault has occurred for the drive object with this object number.
Fault value (r0949, decimal):
First fault that has occurred for this drive object.

Remedy: Evaluate the fault buffer of the specified object.

F40049 **Fault on drive object with object number 49**

Reaction: NONE

Acknowledge: IMMEDIATELY

Cause: A fault has occurred for the drive object with this object number.
Fault value (r0949, decimal):
First fault that has occurred for this drive object.

Remedy: Evaluate the fault buffer of the specified object.

© Siemens AG, 2005. All rights reserved

F40050 **Fault on drive object with object number 50**

Reaction: NONE

Acknowledge: IMMEDIATELY

Cause: A fault has occurred for the drive object with this object number.
Fault value (r0949, decimal):
First fault that has occurred for this drive object.

Remedy: Evaluate the fault buffer of the specified object.

F40051 **Fault on drive object with object number 51**

Reaction: NONE

Acknowledge: IMMEDIATELY

Cause: A fault has occurred for the drive object with this object number.
Fault value (r0949, decimal):
First fault that has occurred for this drive object.

Remedy: Evaluate the fault buffer of the specified object.

F40052 **Fault on drive object with object number 52**

Reaction: NONE

Acknowledge: IMMEDIATELY

Cause: A fault has occurred for the drive object with this object number.
Fault value (r0949, decimal):
First fault that has occurred for this drive object.

Remedy: Evaluate the fault buffer of the specified object.

F40053 **Fault on drive object with object number 53**

Reaction: NONE

Acknowledge: IMMEDIATELY

Cause: A fault has occurred for the drive object with this object number.
Fault value (r0949, decimal):
First fault that has occurred for this drive object.

Remedy: Evaluate the fault buffer of the specified object.

F40054 **Fault on drive object with object number 54**

Reaction: NONE

Acknowledge: IMMEDIATELY

Cause: A fault has occurred for the drive object with this object number.
Fault value (r0949, decimal):
First fault that has occurred for this drive object.

Remedy: Evaluate the fault buffer of the specified object.

F40055 **Fault on drive object with object number 55**

Reaction: NONE

Acknowledge: IMMEDIATELY

Cause: A fault has occurred for the drive object with this object number.
Fault value (r0949, decimal):
First fault that has occurred for this drive object.

Remedy: Evaluate the fault buffer of the specified object.

F40056 **Fault on drive object with object number 56**

Reaction: NONE

Acknowledge: IMMEDIATELY

Cause: A fault has occurred for the drive object with this object number.
Fault value (r0949, decimal):
First fault that has occurred for this drive object.

Remedy: Evaluate the fault buffer of the specified object.

© Siemens AG, 2005. All rights reserved

F40057 **Fault on drive object with object number 57**

Reaction: NONE

Acknowledge: IMMEDIATELY

Cause: A fault has occurred for the drive object with this object number.
Fault value (r0949, decimal):
First fault that has occurred for this drive object.

Remedy: Evaluate the fault buffer of the specified object.

F40058 **Fault on drive object with object number 58**

Reaction: NONE

Acknowledge: IMMEDIATELY

Cause: A fault has occurred for the drive object with this object number.
Fault value (r0949, decimal):
First fault that has occurred for this drive object.

Remedy: Evaluate the fault buffer of the specified object.

F40059 **Fault on drive object with object number 59**

Reaction: NONE

Acknowledge: IMMEDIATELY

Cause: A fault has occurred for the drive object with this object number.
Fault value (r0949, decimal):
First fault that has occurred for this drive object.

Remedy: Evaluate the fault buffer of the specified object.

F40060 **Fault on drive object with object number 60**

Reaction: NONE

Acknowledge: IMMEDIATELY

Cause: A fault has occurred for the drive object with this object number.
Fault value (r0949, decimal):
First fault that has occurred for this drive object.

Remedy: Evaluate the fault buffer of the specified object.

F40061 **Fault on drive object with object number 61**

Reaction: NONE

Acknowledge: IMMEDIATELY

Cause: A fault has occurred for the drive object with this object number.
Fault value (r0949, decimal):
First fault that has occurred for this drive object.

Remedy: Evaluate the fault buffer of the specified object.

F40062 **Fault on drive object with object number 62**

Reaction: NONE

Acknowledge: IMMEDIATELY

Cause: A fault has occurred for the drive object with this object number.
Fault value (r0949, decimal):
First fault that has occurred for this drive object.

Remedy: Evaluate the fault buffer of the specified object.

A40100 **Alarm on another drive object**

Reaction: NONE

Acknowledge: NONE

Cause: An alarm has occurred for a drive object with an object number greater than 62.
Alarm value (r2124, decimal):
Drive object number with alarm.

Remedy: Evaluate the alarm buffer of the object specified in the fault value.

© Siemens AG, 2005. All rights reserved

A40102 **Alarm on drive object with object number 2**

Reaction: NONE

Acknowledge: NONE

Cause: An alarm has occurred for the drive object with this object number.
Alarm value (r2124, decimal):
First alarm that has occurred for this drive object.

Remedy: Evaluate the alarm buffer of the specified object.

A40103 **Alarm on drive object with object number 3**

Reaction: NONE

Acknowledge: NONE

Cause: An alarm has occurred for the drive object with this object number.
Alarm value (r2124, decimal):
First alarm that has occurred for this drive object.

Remedy: Evaluate the alarm buffer of the specified object.

A40104 **Alarm on drive object with object number 4**

Reaction: NONE

Acknowledge: NONE

Cause: An alarm has occurred for the drive object with this object number.
Alarm value (r2124, decimal):
First alarm that has occurred for this drive object.

Remedy: Evaluate the alarm buffer of the specified object.

A40105 **Alarm on drive object with object number 5**

Reaction: NONE

Acknowledge: NONE

Cause: An alarm has occurred for the drive object with this object number.
Alarm value (r2124, decimal):
First alarm that has occurred for this drive object.

Remedy: Evaluate the alarm buffer of the specified object.

A40106 **Alarm on drive object with object number 6**

Reaction: NONE

Acknowledge: NONE

Cause: An alarm has occurred for the drive object with this object number.
Alarm value (r2124, decimal):
First alarm that has occurred for this drive object.

Remedy: Evaluate the alarm buffer of the specified object.

A40107 **Alarm on drive object with object number 7**

Reaction: NONE

Acknowledge: NONE

Cause: An alarm has occurred for the drive object with this object number.
Alarm value (r2124, decimal):
First alarm that has occurred for this drive object.

Remedy: Evaluate the alarm buffer of the specified object.

A40108 **Alarm on drive object with object number 8**

Reaction: NONE

Acknowledge: NONE

Cause: An alarm has occurred for the drive object with this object number.
Alarm value (r2124, decimal):
First alarm that has occurred for this drive object.

Remedy: Evaluate the alarm buffer of the specified object.

© Siemens AG, 2005. All rights reserved

A40109 **Alarm on drive object with object number 9**

Reaction: NONE

Acknowledge: NONE

Cause: An alarm has occurred for the drive object with this object number.
Alarm value (r2124, decimal):
First alarm that has occurred for this drive object.

Remedy: Evaluate the alarm buffer of the specified object.

A40110 **Alarm on drive object with object number 10**

Reaction: NONE

Acknowledge: NONE

Cause: An alarm has occurred for the drive object with this object number.
Alarm value (r2124, decimal):
First alarm that has occurred for this drive object.

Remedy: Evaluate the alarm buffer of the specified object.

A40111 **Alarm on drive object with object number 11**

Reaction: NONE

Acknowledge: NONE

Cause: An alarm has occurred for the drive object with this object number.
Alarm value (r2124, decimal):
First alarm that has occurred for this drive object.

Remedy: Evaluate the alarm buffer of the specified object.

A40112 **Alarm on drive object with object number 12**

Reaction: NONE

Acknowledge: NONE

Cause: An alarm has occurred for the drive object with this object number.
Alarm value (r2124, decimal):
First alarm that has occurred for this drive object.

Remedy: Evaluate the alarm buffer of the specified object.

A40113 **Alarm on drive object with object number 13**

Reaction: NONE

Acknowledge: NONE

Cause: An alarm has occurred for the drive object with this object number.
Alarm value (r2124, decimal):
First alarm that has occurred for this drive object.

Remedy: Evaluate the alarm buffer of the specified object.

A40114 **Alarm on drive object with object number 14**

Reaction: NONE

Acknowledge: NONE

Cause: An alarm has occurred for the drive object with this object number.
Alarm value (r2124, decimal):
First alarm that has occurred for this drive object.

Remedy: Evaluate the alarm buffer of the specified object.

A40115 **Alarm on drive object with object number 15**

Reaction: NONE

Acknowledge: NONE

Cause: An alarm has occurred for the drive object with this object number.
Alarm value (r2124, decimal):
First alarm that has occurred for this drive object.

Remedy: Evaluate the alarm buffer of the specified object.

© Siemens AG, 2005. All rights reserved

A40116 Alarm on drive object with object number 16

Reaction: NONE

Acknowledge: NONE

Cause: An alarm has occurred for the drive object with this object number.
Alarm value (r2124, decimal):
First alarm that has occurred for this drive object.

Remedy: Evaluate the alarm buffer of the specified object.

A40117 Alarm on drive object with object number 17

Reaction: NONE

Acknowledge: NONE

Cause: An alarm has occurred for the drive object with this object number.
Alarm value (r2124, decimal):
First alarm that has occurred for this drive object.

Remedy: Evaluate the alarm buffer of the specified object.

A40118 Alarm on drive object with object number 18

Reaction: NONE

Acknowledge: NONE

Cause: An alarm has occurred for the drive object with this object number.
Alarm value (r2124, decimal):
First alarm that has occurred for this drive object.

Remedy: Evaluate the alarm buffer of the specified object.

A40119 Alarm on drive object with object number 19

Reaction: NONE

Acknowledge: NONE

Cause: An alarm has occurred for the drive object with this object number.
Alarm value (r2124, decimal):
First alarm that has occurred for this drive object.

Remedy: Evaluate the alarm buffer of the specified object.

A40120 Alarm on drive object with object number 20

Reaction: NONE

Acknowledge: NONE

Cause: An alarm has occurred for the drive object with this object number.
Alarm value (r2124, decimal):
First alarm that has occurred for this drive object.

Remedy: Evaluate the alarm buffer of the specified object.

A40121 Alarm on drive object with object number 21

Reaction: NONE

Acknowledge: NONE

Cause: An alarm has occurred for the drive object with this object number.
Alarm value (r2124, decimal):
First alarm that has occurred for this drive object.

Remedy: Evaluate the alarm buffer of the specified object.

A40122 Alarm on drive object with object number 22

Reaction: NONE

Acknowledge: NONE

Cause: An alarm has occurred for the drive object with this object number.
Alarm value (r2124, decimal):
First alarm that has occurred for this drive object.

Remedy: Evaluate the alarm buffer of the specified object.

© Siemens AG, 2005. All rights reserved

A40123 Alarm on drive object with object number 23

Reaction: NONE

Acknowledge: NONE

Cause: An alarm has occurred for the drive object with this object number.
Alarm value (r2124, decimal):
First alarm that has occurred for this drive object.

Remedy: Evaluate the alarm buffer of the specified object.

A40124 Alarm on drive object with object number 24

Reaction: NONE

Acknowledge: NONE

Cause: An alarm has occurred for the drive object with this object number.
Alarm value (r2124, decimal):
First alarm that has occurred for this drive object.

Remedy: Evaluate the alarm buffer of the specified object.

A40125 Alarm on drive object with object number 25

Reaction: NONE

Acknowledge: NONE

Cause: An alarm has occurred for the drive object with this object number.
Alarm value (r2124, decimal):
First alarm that has occurred for this drive object.

Remedy: Evaluate the alarm buffer of the specified object.

A40126 Alarm on drive object with object number 26

Reaction: NONE

Acknowledge: NONE

Cause: An alarm has occurred for the drive object with this object number.
Alarm value (r2124, decimal):
First alarm that has occurred for this drive object.

Remedy: Evaluate the alarm buffer of the specified object.

A40127 Alarm on drive object with object number 27

Reaction: NONE

Acknowledge: NONE

Cause: An alarm has occurred for the drive object with this object number.
Alarm value (r2124, decimal):
First alarm that has occurred for this drive object.

Remedy: Evaluate the alarm buffer of the specified object.

A40128 Alarm on drive object with object number 28

Reaction: NONE

Acknowledge: NONE

Cause: An alarm has occurred for the drive object with this object number.
Alarm value (r2124, decimal):
First alarm that has occurred for this drive object.

Remedy: Evaluate the alarm buffer of the specified object.

A40129 Alarm on drive object with object number 29

Reaction: NONE

Acknowledge: NONE

Cause: An alarm has occurred for the drive object with this object number.
Alarm value (r2124, decimal):
First alarm that has occurred for this drive object.

Remedy: Evaluate the alarm buffer of the specified object.

© Siemens AG, 2005. All rights reserved

A40130 **Alarm on drive object with object number 30**

Reaction: NONE

Acknowledge: NONE

Cause: An alarm has occurred for the drive object with this object number.
Alarm value (r2124, decimal):
First alarm that has occurred for this drive object.

Remedy: Evaluate the alarm buffer of the specified object.

A40131 **Alarm on drive object with object number 31**

Reaction: NONE

Acknowledge: NONE

Cause: An alarm has occurred for the drive object with this object number.
Alarm value (r2124, decimal):
First alarm that has occurred for this drive object.

Remedy: Evaluate the alarm buffer of the specified object.

A40132 **Alarm on drive object with object number 32**

Reaction: NONE

Acknowledge: NONE

Cause: An alarm has occurred for the drive object with this object number.
Alarm value (r2124, decimal):
First alarm that has occurred for this drive object.

Remedy: Evaluate the alarm buffer of the specified object.

A40133 **Alarm on drive object with object number 33**

Reaction: NONE

Acknowledge: NONE

Cause: An alarm has occurred for the drive object with this object number.
Alarm value (r2124, decimal):
First alarm that has occurred for this drive object.

Remedy: Evaluate the alarm buffer of the specified object.

A40134 **Alarm on drive object with object number 34**

Reaction: NONE

Acknowledge: NONE

Cause: An alarm has occurred for the drive object with this object number.
Alarm value (r2124, decimal):
First alarm that has occurred for this drive object.

Remedy: Evaluate the alarm buffer of the specified object.

A40135 **Alarm on drive object with object number 35**

Reaction: NONE

Acknowledge: NONE

Cause: An alarm has occurred for the drive object with this object number.
Alarm value (r2124, decimal):
First alarm that has occurred for this drive object.

Remedy: Evaluate the alarm buffer of the specified object.

A40136 **Alarm on drive object with object number 36**

Reaction: NONE

Acknowledge: NONE

Cause: An alarm has occurred for the drive object with this object number.
Alarm value (r2124, decimal):
First alarm that has occurred for this drive object.

Remedy: Evaluate the alarm buffer of the specified object.

© Siemens AG, 2005. All rights reserved

A40137 **Alarm on drive object with object number 37**

Reaction: NONE

Acknowledge: NONE

Cause: An alarm has occurred for the drive object with this object number.
Alarm value (r2124, decimal):
First alarm that has occurred for this drive object.

Remedy: Evaluate the alarm buffer of the specified object.

A40138 **Alarm on drive object with object number 38**

Reaction: NONE

Acknowledge: NONE

Cause: An alarm has occurred for the drive object with this object number.
Alarm value (r2124, decimal):
First alarm that has occurred for this drive object.

Remedy: Evaluate the alarm buffer of the specified object.

A40139 **Alarm on drive object with object number 39**

Reaction: NONE

Acknowledge: NONE

Cause: An alarm has occurred for the drive object with this object number.
Alarm value (r2124, decimal):
First alarm that has occurred for this drive object.

Remedy: Evaluate the alarm buffer of the specified object.

A40140 **Alarm on drive object with object number 40**

Reaction: NONE

Acknowledge: NONE

Cause: An alarm has occurred for the drive object with this object number.
Alarm value (r2124, decimal):
First alarm that has occurred for this drive object.

Remedy: Evaluate the alarm buffer of the specified object.

A40141 **Alarm on drive object with object number 41**

Reaction: NONE

Acknowledge: NONE

Cause: An alarm has occurred for the drive object with this object number.
Alarm value (r2124, decimal):
First alarm that has occurred for this drive object.

Remedy: Evaluate the alarm buffer of the specified object.

A40142 **Alarm on drive object with object number 42**

Reaction: NONE

Acknowledge: NONE

Cause: An alarm has occurred for the drive object with this object number.
Alarm value (r2124, decimal):
First alarm that has occurred for this drive object.

Remedy: Evaluate the alarm buffer of the specified object.

A40143 **Alarm on drive object with object number 43**

Reaction: NONE

Acknowledge: NONE

Cause: An alarm has occurred for the drive object with this object number.
Alarm value (r2124, decimal):
First alarm that has occurred for this drive object.

Remedy: Evaluate the alarm buffer of the specified object.

© Siemens AG, 2005. All rights reserved

A40144 **Alarm on drive object with object number 44**

Reaction: NONE

Acknowledge: NONE

Cause: An alarm has occurred for the drive object with this object number.
Alarm value (r2124, decimal):
First alarm that has occurred for this drive object.

Remedy: Evaluate the alarm buffer of the specified object.

A40145 **Alarm on drive object with object number 45**

Reaction: NONE

Acknowledge: NONE

Cause: An alarm has occurred for the drive object with this object number.
Alarm value (r2124, decimal):
First alarm that has occurred for this drive object.

Remedy: Evaluate the alarm buffer of the specified object.

A40146 **Alarm on drive object with object number 46**

Reaction: NONE

Acknowledge: NONE

Cause: An alarm has occurred for the drive object with this object number.
Alarm value (r2124, decimal):
First alarm that has occurred for this drive object.

Remedy: Evaluate the alarm buffer of the specified object.

A40147 **Alarm on drive object with object number 47**

Reaction: NONE

Acknowledge: NONE

Cause: An alarm has occurred for the drive object with this object number.
Alarm value (r2124, decimal):
First alarm that has occurred for this drive object.

Remedy: Evaluate the alarm buffer of the specified object.

A40148 **Alarm on drive object with object number 48**

Reaction: NONE

Acknowledge: NONE

Cause: An alarm has occurred for the drive object with this object number.
Alarm value (r2124, decimal):
First alarm that has occurred for this drive object.

Remedy: Evaluate the alarm buffer of the specified object.

A40149 **Alarm on drive object with object number 49**

Reaction: NONE

Acknowledge: NONE

Cause: An alarm has occurred for the drive object with this object number.
Alarm value (r2124, decimal):
First alarm that has occurred for this drive object.

Remedy: Evaluate the alarm buffer of the specified object.

A40150 **Alarm on drive object with object number 50**

Reaction: NONE

Acknowledge: NONE

Cause: An alarm has occurred for the drive object with this object number.
Alarm value (r2124, decimal):
First alarm that has occurred for this drive object.

Remedy: Evaluate the alarm buffer of the specified object.

© Siemens AG, 2005. All rights reserved

A40151 **Alarm on drive object with object number 51**

Reaction: NONE

Acknowledge: NONE

Cause: An alarm has occurred for the drive object with this object number.
Alarm value (r2124, decimal):
First alarm that has occurred for this drive object.

Remedy: Evaluate the alarm buffer of the specified object.

A40152 **Alarm on drive object with object number 52**

Reaction: NONE

Acknowledge: NONE

Cause: An alarm has occurred for the drive object with this object number.
Alarm value (r2124, decimal):
First alarm that has occurred for this drive object.

Remedy: Evaluate the alarm buffer of the specified object.

A40153 **Alarm on drive object with object number 53**

Reaction: NONE

Acknowledge: NONE

Cause: An alarm has occurred for the drive object with this object number.
Alarm value (r2124, decimal):
First alarm that has occurred for this drive object.

Remedy: Evaluate the alarm buffer of the specified object.

A40154 **Alarm on drive object with object number 54**

Reaction: NONE

Acknowledge: NONE

Cause: An alarm has occurred for the drive object with this object number.
Alarm value (r2124, decimal):
First alarm that has occurred for this drive object.

Remedy: Evaluate the alarm buffer of the specified object.

A40155 **Alarm on drive object with object number 55**

Reaction: NONE

Acknowledge: NONE

Cause: An alarm has occurred for the drive object with this object number.
Alarm value (r2124, decimal):
First alarm that has occurred for this drive object.

Remedy: Evaluate the alarm buffer of the specified object.

A40156 **Alarm on drive object with object number 56**

Reaction: NONE

Acknowledge: NONE

Cause: An alarm has occurred for the drive object with this object number.
Alarm value (r2124, decimal):
First alarm that has occurred for this drive object.

Remedy: Evaluate the alarm buffer of the specified object.

A40157 **Alarm on drive object with object number 57**

Reaction: NONE

Acknowledge: NONE

Cause: An alarm has occurred for the drive object with this object number.
Alarm value (r2124, decimal):
First alarm that has occurred for this drive object.

Remedy: Evaluate the alarm buffer of the specified object.

© Siemens AG, 2005. All rights reserved

A40158 **Alarm on drive object with object number 58**

Reaction: NONE

Acknowledge: NONE

Cause: An alarm has occurred for the drive object with this object number.
Alarm value (r2124, decimal):
First alarm that has occurred for this drive object.

Remedy: Evaluate the alarm buffer of the specified object.

A40159 **Alarm on drive object with object number 59**

Reaction: NONE

Acknowledge: NONE

Cause: An alarm has occurred for the drive object with this object number.
Alarm value (r2124, decimal):
First alarm that has occurred for this drive object.

Remedy: Evaluate the alarm buffer of the specified object.

A40160 **Alarm on drive object with object number 60**

Reaction: NONE

Acknowledge: NONE

Cause: An alarm has occurred for the drive object with this object number.
Alarm value (r2124, decimal):
First alarm that has occurred for this drive object.

Remedy: Evaluate the alarm buffer of the specified object.

A40161 **Alarm on drive object with object number 61**

Reaction: NONE

Acknowledge: NONE

Cause: An alarm has occurred for the drive object with this object number.
Alarm value (r2124, decimal):
First alarm that has occurred for this drive object.

Remedy: Evaluate the alarm buffer of the specified object.

A40162 **Alarm on drive object with object number 62**

Reaction: NONE

Acknowledge: NONE

Cause: An alarm has occurred for the drive object with this object number.
Alarm value (r2124, decimal):
First alarm that has occurred for this drive object.

Remedy: Evaluate the alarm buffer of the specified object.

F40799 **CU link: Configured transfer end time exceeded**

Reaction: NONE

Acknowledge: IMMEDIATELY

Cause: The configured transfer end time when transferring the cyclic actual values was exceeded.

Remedy: - carry-out a POWER ON (power off/on) for all components.
- contact the Hotline.

F40801 **CX32 DRIVE-CLiQ: Sign-of-life missing**

Reaction: OFF2

Acknowledge: IMMEDIATELY

Cause: A DRIVE-CLiQ communications error has occurred between the Control Unit and the controller extension involved.
The nodes do not send and receive in synchronism.
Fault value (r0949, hexadecimal):
0A: The sign-of-life bit in the receive telegram is not set.

© Siemens AG, 2005. All rights reserved

Remedy: - carry-out a POWER ON.
- replace the component involved.
See also: p9916

F40820 CX32 DRIVE-CLiQ: Telegram error

Reaction: OFF2

Acknowledge: IMMEDIATELY

Cause: A DRIVE-CLiQ communications error has occurred between the Control Unit and the controller extension involved.
Fault value (r0949, hexadecimal):
01: CRC error.
02: Telegram is shorter than specified in the length byte or in the receive list.
03: Telegram is longer than specified in the length byte or in the receive list.
04: The length of the receive telegram does not match the receive list.
05: The type of the receive telegram does not match the receive list.
06: The address of the controller extension in the telegram and in the receive list do not match.
07: Controller extension expects a SYNC telegram, but the receive telegram is not a SYNC telegram.
08: Controller extension does not expect a SYNC telegram, but the receive telegram is a SYNC telegram.
09: The error bit in the receive telegram is set.
10: The receive telegram is too early.

Remedy: - carry-out a POWER ON.
- check the electrical cabinet design and cable routing for EMC compliance
- check the DRIVE-CLiQ wiring (interrupted cable, contacts, ...).
See also: p9916

F40835 CX32 DRIVE-CLiQ: Cyclic data transfer error

Reaction: OFF2

Acknowledge: IMMEDIATELY

Cause: A DRIVE-CLiQ communications error has occurred between the Control Unit and the controller extension involved.
The nodes do not send and receive in synchronism.
Fault value (r0949, hexadecimal):
21: The cyclic telegram has not been received.
22: Timeout in the telegram receive list.
40: Timeout in the telegram send list.

Remedy: - carry-out a POWER ON.
- replace the component involved.
See also: p9916

F40836 CX32 DRIVE-CLiQ: Send error for DRIVE-CLiQ data

Reaction: OFF2

Acknowledge: IMMEDIATELY

Cause: A DRIVE-CLiQ communications error has occurred between the Control Unit and the controller extension involved.
Data were not able to be sent.
Fault value (r0949, hexadecimal):
41: Telegram type does not match send list.

Remedy: - carry-out a POWER ON.

F40837 CX32 DRIVE-CLiQ: Component faulted

Reaction: OFF2

Acknowledge: IMMEDIATELY

Cause: Fault detected on the DRIVE-CLiQ component involved. Faulty hardware cannot be excluded.
Fault value (r0949, hexadecimal):
20: Error in the telegram header.
23: Receive error: The telegram buffer memory contains an error.
42: Send error: The telegram buffer memory contains an error.
43: Send error: The telegram buffer memory contains an error.

Remedy: - check the DRIVE-CLiQ wiring (interrupted cable, contacts, ...).
- check the electrical cabinet design and cable routing for EMC compliance
- if required, use another DRIVE-CLiQ socket (p9904).
- replace the component involved.

© Siemens AG, 2005. All rights reserved

F40845 CX32 DRIVE-CLiQ: Cyclic data transfer error

Reaction: OFF2

Acknowledge: IMMEDIATELY

Cause: A DRIVE-CLiQ communications error has occurred between the Control Unit and the controller extension involved.
Fault value (r0949, hexadecimal):
0B: Synchronization error during alternating cyclic data transfer.

Remedy: - carry-out a POWER ON.
See also: p9916

F40851 CU DRIVE-CLiQ: Sign-of-life missing

Reaction: OFF2

Acknowledge: IMMEDIATELY

Cause: A DRIVE-CLiQ communications error has occurred between the Control Unit and the power module involved. The DRIVE-CLiQ component did not set the sign of life to the Control Unit.
Fault value (r0949, hexadecimal):
0A: The sign-of-life bit in the receive telegram is not set.

Remedy: - upgrade the firmware of the component involved.

F40860 CU DRIVE-CLiQ: Telegram error

Reaction: OFF2

Acknowledge: IMMEDIATELY

Cause: A DRIVE-CLiQ communications error has occurred between the Control Unit and the controller extension involved.
Fault value (r0949, hexadecimal):
11: CRC error and the receive telegram is too early.
01: CRC error.
12: The telegram is shorter than that specified in the length byte or in the receive list and the receive telegram is too early.
02: Telegram is shorter than specified in the length byte or in the receive list.
13: The telegram is longer than that specified in the length byte or in the receive list and the receive telegram is too early.
03: Telegram is longer than specified in the length byte or in the receive list.
14: The length of the receive telegram does not match the receive list and the receive telegram is too early.
04: The length of the receive telegram does not match the receive list.
15: The type of the receive telegram does not match the receive list and the receive telegram is too early.
05: The type of the receive telegram does not match the receive list.
16: The address of the controller extension in the telegram and in the receive list does not match and the receive telegram is too early.
06: The address of the controller extension in the telegram and in the receive list do not match.
19: The error bit in the receive telegram is set and the receive telegram is too early.
09: The error bit in the receive telegram is set.
10: The receive telegram is too early.

Remedy: - carry-out a POWER ON.
- check the electrical cabinet design and cable routing for EMC compliance
- check the DRIVE-CLiQ wiring (interrupted cable, contacts, ...).
See also: p9915

F40885 CU DRIVE-CLiQ: Cyclic data transfer error

Reaction: OFF2

Acknowledge: IMMEDIATELY

Cause: A DRIVE-CLiQ communications error has occurred between the Control Unit and the controller extension involved. The nodes do not send and receive in synchronism.
Fault value (r0949, hexadecimal):
0A: The sign-of-life bit in the receive telegram is not set.
1A: Sign-of-life bit in the receive telegram not set and the receive telegram is too early.
21: The cyclic telegram has not been received.
22: Timeout in the telegram receive list.
40: Timeout in the telegram send list.
62: Error at the transition to cyclic operation.

© Siemens AG, 2005. All rights reserved

Remedy: - check the power supply voltage of the component involved.
- carry-out a POWER ON.
- replace the component involved.
See also: p9915

F40886 CU DRIVE-CLiQ: Error when sending DRIVE-CLiQ data

Reaction: OFF2

Acknowledge: IMMEDIATELY

Cause: A DRIVE-CLiQ communications error has occurred between the Control Unit and the controller extension involved. Data were not able to be sent.
Fault value (r0949, hexadecimal):
41: Telegram type does not match send list.

Remedy: - carry-out a POWER ON.

F40887 CU DRIVE-CLiQ: Component faulted

Reaction: OFF2

Acknowledge: IMMEDIATELY

Cause: Fault detected on the DRIVE-CLiQ component involved. Faulty hardware cannot be excluded.
Fault value (r0949, hexadecimal):
20: Error in the telegram header.
23: Receive error: The telegram buffer memory contains an error.
42: Send error: The telegram buffer memory contains an error.
43: Send error: The telegram buffer memory contains an error.
60: Response received too late during runtime measurement.
61: Time taken to exchange characteristic data too long.

Remedy: - check the DRIVE-CLiQ wiring (interrupted cable, contacts, ...).
- check the electrical cabinet design and cable routing for EMC compliance
- if required, use another DRIVE-CLiQ socket (p9904).
- replace the component involved.

F40895 CU DRIVE-CLiQ: Cyclic data transfer error

Reaction: OFF2

Acknowledge: IMMEDIATELY

Cause: A DRIVE-CLiQ communications error has occurred between the Control Unit and the controller extension involved.
Fault value (r0949, hexadecimal):
0B: Synchronization error during alternating cyclic data transfer.

Remedy: - carry-out a POWER ON.
See also: p9915

F49150 Cooling system: Fault occurred

Reaction: OFF2

Acknowledge: IMMEDIATELY

Cause: The cooling system signals a general fault.

Remedy: - check the wiring between the cooling system and the input terminal (Terminal Module).
- check the external Control Unit for the cooling system.
See also: p0266

F49151 Cooling system: Conductivity has exceeded the fault threshold

Reaction: OFF2

Acknowledge: IMMEDIATELY

Cause: The conductivity of the cooling water has exceeded the selected fault threshold (p0269[2]).
See also: p0266

Remedy: Check the device to de-ionize the cooling water.

© Siemens AG, 2005. All rights reserved

F49152 Cooling system: ON command, feedback signal missing

Reaction: OFF2

Acknowledge: IMMEDIATELY

Cause: The feedback signal of the ON command of the cooling system is missing.
- after the ON command, the feedback signal has not been received within the selected starting time (p0260).
- the feedback signal has failed in operation.
See also: p0260, r0267

Remedy:
- check the wiring between the cooling system and the input terminal (Terminal Module).
- check the external Control Unit for the cooling system.

F49153 Cooling system: The water flow too low

Reaction: OFF2

Acknowledge: IMMEDIATELY

Cause: The drive converter cooling system signals that the water flow is too low.
- after the ON command, the feedback signal has not been received within the selected starting time (p0260).
- in operation, the feedback signal has failed for longer than the permitted failure time (p0263).
See also: p0260, p0263, r0267

Remedy:
- check the wiring between the cooling system and the input terminal (Terminal Module).
- check the external Control Unit for the cooling system.

F49154 Cooling system: Water has leaked

Reaction: OFF2

Acknowledge: IMMEDIATELY

Cause: The leakage water monitoring function has responded.
See also: r0267

Remedy:
- check the cooling system for leaks in the cooling circuit.
- check the wiring of the input terminal (Terminal Module) used to monitor the leakage water.

F49155 Cooling system: Power Stack Adapter, firmware version too old

Reaction: OFF2

Acknowledge: POWER ON

Cause: The firmware version in the Power Stack Adapter (PSA) is too old and does not support any water cooling.

Remedy: Upgrade the firmware version.

F49156 Cooling system: Cooling water temperature, fault threshold exceeded

Reaction: OFF2

Acknowledge: IMMEDIATELY

Cause: The cooling water intake temperature has exceeded the permanently set fault threshold.

Remedy: Check the cooling system and the ambient conditions.

A49170 Cooling system: Alarm occurred

Reaction: NONE

Acknowledge: NONE

Cause: The cooling system signals a general alarm.

Remedy:
- check the wiring between the cooling system and the input terminal (Terminal Module).
- check the external Control Unit for the cooling system.

A49171 Cooling system: Conductivity has exceeded the alarm threshold

Reaction: NONE

Acknowledge: NONE

Cause: The conductivity of the cooling water has exceeded the selected alarm threshold (p0269[1]).
See also: p0266

Remedy: Check the device to de-ionize the cooling water.

© Siemens AG, 2005. All rights reserved

A49172 **Cooling system: Conductivity actual value is not valid**

Reaction: NONE

Acknowledge: NONE

Cause: When monitoring the conductivity of the cooling water, there is a fault in the wiring or in the sensor.

Remedy: - check the wiring between the cooling system and the Power Stack Adapter (PSA).
- check the function of the sensor to measure the conductivity.

A49173 **Cooling system: Cooling water temperature, alarm threshold exceeded**

Reaction: NONE

Acknowledge: NONE

Cause: The cooling water intake temperature has exceeded the permanently set alarm threshold.

Remedy: Check the cooling system and the ambient conditions.

© Siemens AG, 2005. All rights reserved

© Siemens AG, 2005. All rights reserved

List of Abbreviations

Abbreviation	German	English
A		
A...	Warnung	Alarm
AC	Wechselstrom	Alternating Current
ADC	Analog-Digital-Konverter	Analog Digital Converter
AI	Analogeingang	Analog Input
ALM	Active Line Module	Active Line Module
AO	Analogausgang	Analog Output
AOP	Advanced Operator Panel	Advanced Operator Panel
ASC	Ankerkurzschluss	Armature Short-Circuit
ASCII	Amerikanische Code-Norm für den Informationsaustausch	American Standard Code for Information Interchange
B		
OC	Operating condition	Operating Condition
BERO	Firmenname für einen Näherungsschalter	Tradename for a type of proximity switch
BI	Binektoreingang	Binector Input
BIA	Berufsgenossenschaftliches Institut für Arbeitssicherheit	Berufsgenossenschaftliches Institut für Arbeitssicherheit (German Institute for Occupational Safety)
BICO	Binektor-Konnektor-Technologie	Binector Connector Technology
BLM	Basic Line Module	Basic Line Module
BOP	Basic Operator Panel	Basic Operator Panel
C		
C	Kapazität	Capacitance
C...	Safety-Meldung	Safety message
CAN	Serielles Bussystem	Controller Area Network
CBC	Kommunikationsbaugruppe CAN	Communication Board CAN
CD	Compact Disc	Compact Disc
CDS	Befehlsdatensatz	Command Data Set
CI	Konnektoreingang	Connector Input
CNC	Computerunterstützte numerische Steuerung	Computer Numerical Control
CO	Konnektorausgang	Connector Output
CO/BO:	Konnektor-/Binektorausgang	Connector Output/Binector Output
COB-ID	CAN object identification	CAN object identification

© Siemens AG, 2005. All rights reserved

Abbreviation	German	English
COM	Mittelkontakt eines Wechselkontaktes	Mid-position contact of a changeover contact
CP	Kommunikationsprozessor	Communications Processor
CPU	Zentralbaugruppe	Central Processing Unit
CRC	Checksummenprüfung	Cyclic Redundancy Check
CU	Control unit	Control unit
D		
DAC	Digital-Analog-Konverter	Digital Analog Converter
DC	Gleichstrom	Direct Current
DCN	Gleichstrom negativ	Direct Current Negative
DCP	Gleichstrom positiv	Direct Current Positive
DDS:	Drive data set	Drive Data Set
DI	Digitaleingang	Digital Input
DI/DO	Digitaleingang/-ausgang bidirektional	Bidirectional Digital Input/Output
DMC	DRIVE-CLiQ Module Cabinet (Hub)	DRIVE-CLiQ Module Cabinet (Hub)
DO	Digitalausgang	Digital Output
DO	Antriebsobjekt	Drive Object
DPRAM	Speicher mit beidseitigem Zugriff	Dual-Port Random Access Memory
DRAM	Dynamischer Speicher	Dynamic Random Access Memory
DRIVE CLiQ	Drive Component Link with IQ	Drive Component Link with IQ
DSC	Dynamic Servo Control	Dynamic Servo Control
E		
EDS	Encoder data set	Encoder Data Set
ESD	Elektrostatisch gefährdete Baugruppen	Electrostatic Sensitive Devices
EMF	Elektromagnetische Kraft	Electromagnetic Force (EMF)
EMC	Elektromagnetische Verträglichkeit	Electromagnetic Compatibility
EN	Europäische Norm	European Standard
EnDat	Geber-Schnittstelle	Encoder-Data-Interface
EP	Impulsfreigabe	Enable Pulses
ES	Engineering System	Engineering System
ESB	Ersatzschaltbild	Equivalent circuit diagram
ESR	Erweitertes Stillsetzen und Rückziehen	Extended Stop and Retract
F		
F...	Störung	Fault
FAQ	Häufig gestellte Fragen	Frequently Asked Questions
FCC	Function Control Chart	Function Control Chart
FCC	Flussstromregelung	Flux Current Control
FEPROM	Schreib- und Lesespeicher nichtflüchtig	Flash-EPROM
FG	Funktionsgenerator	Function Generator
FI	Fehlerstrom-Schutzschalter	Residual-Current Circuit-Breaker (RCCB)
FP	Function diagram	Function diagram
FW	Firmware	Firmware

© Siemens AG, 2005. All rights reserved

Abbreviation	German	English
G		
GC	Global-Control-Telegramm (Broadcast-Telegramm)	Global Control telegram (broadcast telegram)
GSD	Gerätestammdatei: beschreibt die Merkmale eines PROFIBUS-SIaves	Device master file: describes the features of a PROFIBUS slave
GPS	Gate Supply Voltage	Gate Supply Voltage
H		
HF	Hochfrequenz	High Frequency
HFD	Hochfrequenzdrossel	High frequency reactor
RFG	Ramp-Function Generator	Ramp-Function Generator
HMI	Mensch-Maschine-Schnittstelle	Human Machine Interface
HTL	Logik mit hoher Störschwelle	High-Threshold Logic
HW	Hardware	Hardware
I		
available soon	In Vorbereitung: diese Eigenschaft steht zur Zeit nicht zur Verfügung	In preparation: this feature is currently not available
IBN	Commissioning	Commissioning
I/O	Eingang/Ausgang	Input/Output
ID	Identifizierung	Identifier
IEC	Internationale Norm in der Elektrotechnik	International Electrotechnical Commission
IGBT	Bipolartransistor mit isolierter Steuerelektrode	Insulated Gate Bipolar Transistor
IL	Pulse cancellation	Pulse suppression
IT	Drehstromversorgungsnetz ungeerdet	Insulated three-phase supply network
J		
JOG	Tippen	Jogging
K		
KDV	Kreuzweiser Datenvergleich	Data cross-checking
KIP	Kinetische Pufferung	Kinetic buffering
Kp	Proportionalverstärkung	Proportional gain
KTY	Spezieller Temperatursensor	Special temperature sensor
L		
L	Inductance	Inductance
LED	Leuchtdiode	Light Emitting Diode
LSB	Niederwertigstes Bit	Least Significant Bit
LSS	Line breaker	Line Side Switch
M		
M	Ground	Reference potential, zero potential
MB	Megabyte	Megabyte
MCC	Motion Control Chart	Motion Control Chart
MDS	Motor data set	Motor Data Set
MLFB	Maschinenlesbare Fabrikatebezeichnung	Machine-readable product designation

© Siemens AG, 2005. All rights reserved

Abbreviation	German	English
MMC	Mensch Maschine Kommunikation	Man Machine Communication
MSB	Höchstwertigstes Bit	Most Significant Bit
MSCY_C1	Zyklische Kommunikation zwischen Master (Klasse 1) und Slave	Master Slave Cycle Class 1
MT	Messtaster	Measuring probe
N		
N. C.	Nicht angeschlossen	nicht vebunden
N...	No report or internal report	No Report
NAMUR	Normenarbeitsgemeinschaft für Mess- und Regeltechnik in der chemischen Industrie	Standardization association for measurement and control in chemical industries
NC	Öffner	Normally Closed contact
NC	Numerische Steuerung	Numerical Control
NEMA	Normengremium in USA (United States of America)	National Electrical Manufacturers Association
NM	Nullmarke	Zero mark
NO	Schließer	Normally Open contact
O		
OEM	Original Equipment Manufacturer	Original Equipment Manufacturer
OLP	Busstecker für Lichtleiter	Optical Link Plug
OMI	Option Module Interface	Option Module Interface
P		
p...	Adjustable parameters	Adjustable parameter
PcCtrl	Master control	Master Control
PDS	Power module data set	Power Module Data Set
PE	Schutzerde	Protective Earth
PELV	Protective Extra Low Voltage	Protective Extra Low Voltage
PG	Programmiergerät	Programming device
PI	Proportional Integral	Proportional Integral
PID	Proportional Integral Differential	Proportional Integral Differential
PLC	Speicherprogrammierbare Steuerung (SPS)	Programmable Logic Controller
PLL	Baustein zur Synchronisierung	Phase Locked Loop
PNO	PROFIBUS Nutzerorganisation	PROFIBUS user organisation
PRBS	Weißes Rauschen	Pseudo Random Binary Signal
PROFIBUS	Serieller Datenbus	Process Field Bus
PS	Stromversorgung	Power Supply
PSA	Power Stack Adapter	Power Stack Adapter
PTC	Positiver Temperaturkoeffizient	Positive Temperature Coefficient
PTP	Punkt zu Punkt	Point To Point
PWM	Pulsweitenmodulation	Pulse Width Modulation
PZD	PROFIBUS Prozessdaten	PROFIBUS process data

© Siemens AG, 2005. All rights reserved

Abbreviation	German	English
Q		
R		
r...	Visualization parameters (read-only)	Display parameter (read only)
RAM	Speicher zum Lesen und Schreiben	Random Access Memory
RCCB	Fehlerstrom-Schutzschalter	Residual-Current Circuit-Breaker
RCD	Fehlerstrom-Schutzschalter	Residual Current Device
RJ45	Norm. Beschreibt eine 8-polige Steckverbindung mit Twisted-Pair Ethernet.	Standard Describes an 8-pole plug connector with twisted pair Ethernet.
RKA	Cooling system	Recooling system
RO	Nur lesbar	Read Only
RPDO	Receive Process Data Object	Receive Process Data Object
RS232	Serielle Schnittstelle	Serial interface
RS485	Norm. Beschreibt die Physik einer digitalen seriellen Schnittstelle.	Standard Describes the physical characteristics of a digital serial interface.
S		
S1	Dauerbetrieb	Continuous operation
S3	Aussetzbetrieb	Periodic duty
SBC	Sichere Bremsenansteuerung	Safe Brake Control
SBH	Sicherer Betriebshalt	Safe operating stop
SBR	Sichere Bremsrampe	Safe braking ramp
SE	Sicherer Software-Endschalter	Safe software limit switch
SG	Sicher reduzierte Geschwindigkeit	Safely reduced speed
SGA	Sicherheitsgerichteter Ausgang	Safety-related output
SGE	Sicherheitsgerichteter Eingang	Safety-related input
SH	Sicherer Halt	Safe standstill
SI	Safety Integrated	Safety Integrated
SIL	Sicherheitsintegritätsgrad	Safety Integrity Level
SLM	Smart line module	Smart line module
SLVC	Geberlose Vektorregelung	Sensorless VECTOR Control
SM	Sensor Module	Sensor Module
SMC	Sensor Module Cabinet	Sensor Module Cabinet
SME	Sensor Module External	Sensor Module External
SN	Sicherer Software-Nocken	Safe software cam
SPC	Setpoint Channel	Setpoint Channel
SPS	Speicherprogrammierbare Steuerung	Programmable Logic Controller (PLC)
STW	PROFIBUS Steuerwort	PROFIBUS controlword
T		
TB	Terminal Board	Terminal board
TIA	Totally Integrated Automation	Totally Integrated Automation
TM	Terminal Module	Terminal Module
TN	Drehstromversorgungsnetz geerdet	Grounded three-phase supply network
Tn	Nachstellzeit	Integral time

© Siemens AG, 2005. All rights reserved

Abbreviation	German	English
TPDO	Transmit Process Data Object	Transmit Process Data Object
TT	Drehstromversorgungsnetz geerdet	Grounded three-phase supply network
TTL	Transistor-Transistor-Logik	Transistor-Transistor-Logic
U		
UL	Underwriters Laboratories Inc.	Underwriters Laboratories Inc.
UPS	Unterbrechungsfreie Stromversorgung	Uninteruptible power supply
V		
VC	Vektorregelung	VECTOR control
Vdc	DC link voltage	DC link voltage
VDE	Verband Deutscher Elektrotechniker	Association of German Electrical Engineers
VDI	Verein Deutscher Ingenieure	Association of German Electrical Engineers
Vpp	Volt Spitze zu Spitze	Volt peak to peak
VSM	Voltage Sensing Module	Voltage Sensing Module
W		
WZM	Werkzeugmaschine	Machine tool
X		
XML	Erweiterbare Auszeichnungssprache (Standardsprache für Web-Publishing und Dokumentenmanagement)	Extensible Markup Language
Y		
Z		
ZK	DC Link	DC Link
ZSW	PROFIBUS Zustandswort	PROFIBUS statusword

© Siemens AG, 2005. All rights reserved

References

SINAMICS Documentation

Catalogs

/**D11.1**/ **SINAMICS G110 Converter Chassis Units 0.12 kW to 3 kW**

Order number: E86060-K5511-A111-A2 Edition: 10.2005

/**D11**/ **SINAMICS G130 Drive Converter Chassis Units**
SINAMICS G150 Drive Converter Cabinet Units

Order no.: E86060-K5511-A101-A2 Edition: 07.2004

/**D21.1**/ **SINAMICS S120 VECTOR Control Drive System**

Order number: E86060-K5521-A111-A1 Edition: 04.2005

/**D21.2**/ **SINAMICS S120 Servo Control Drive System**

Order number: E86060-K5521-A121-A1 Edition: 04.2004

/**D21.3**/ **SINAMICS S150 Converter Cabinet Units**
75 kW to 1200 kW

Order number: E86060-K5521-A131-A1 Edition: 05.2004

Related catalogs

/**ST70**/ **SIMATIC Components for Totally Integrated Automation, Catalog ST70**
Ordering information

Order number: E86060-K4670-A111-A9 Edition: 10.2004

/**PM10**/ **SIMOTION Motion Control System, Catalog PM10**
Ordering information

Order no.: E86060-K4910-A101-A5 Ausgabe: 07.2005

© Siemens AG, 2005, All rights reserved

Interactive catalogs

/**CA01**/ **Automation and Drives' Offline Mall**
CD-ROM
Order number: E86060-D4001-A100-C3 Edition: 10.2004

/**Mall**/ **A&D Mall, Catalog and Online Ordering System**
http://www.siemens.com/automation/mall

Electronic Documentation

/**CD2**/ **SINAMICS**
The SINAMICS System
Order no.: 6SL3097-2CA00-0YG2 Edition: 07.2005

User Documentation

/**BA1**/ **SINAMICS G150**
Operating Instructions
Order number: On request Edition: 06.2005

/**BA2**/ **SINAMICS G130**
Operating Instructions
Order number: On request Edition: 06.2005

/**BA3**/ **SINAMICS S150**
Operating Instructions
Order number: On request Edition: 06.2005

/**GH1**/ **SINAMICS S120**
Equipment Manual for Control Units and Additional System Components
Order no.: 6SL3097-2AH00-0AP2 Edition: 06.2005

/**GH2**/ **SINAMICS S120**
Equipment Manual for Booksize Power Modules
Order no.: 6SL3097-2AC00-0AP2 Edition: 06.2005

/**GH3**/ **SINAMICS S120**
Equipment Manual for Chassis Power Modules
Order number: 6SL3097-2AE00-0BP0 Edition: 12.2004

/**GH4**/ **SINAMICS S120**
Equipment Manual Power Modules Booksize Cold-Plate
Order no.: 6SL3097-2AJ00-0AP2 Edition: 06.2005

© Siemens AG, 2005, All rights reserved

/**GS1**/ **SINAMICS S120**
Getting Started
Order no.: 6SL3097-2AG00-0AP2 Edition: 06.2005

/**IH1**/ **SINAMICS S120**
Installation and Startup Manual
Order number: 6SL3097-2AF00-0AP3 Edition: 06.2005

/**FH1**/ **SINAMICS S120**
Function Manual
Order number: 6SL3097-2AB00-0BP1 Edition: 06.2005

/**IH2**/ **SINAMICS S120**
Commissioning Manual for CANopen
Order number: 6SL3097-2AA00-0BP1 Edition: 12.2004

/**LH1**/ **SINAMICS S**
List Manual
Order number: 6SL3097-2AP00-0AP3 Edition: 06.2005

Further Supplementary Documentation

1 **Drive ES Basic V5.1**
Description of functions
Engineering System for drives from the SIEMENS A&D product range
Order number: 6SW1700-0JA00-0AA0 Edition: 08.2001

2 **SIMOTION Engineering System**
Handling
Order number: 6AU1900-1AB32-0AA0 Edition: 12.2004

/**PJAL**/ **SIMODRIVE, SIMOVERT MASTERDRIVES, SINAMICS General Part for Synchronous Motors**
Configuration Manual
Order number: 6SN1197-0AD07-0BP2 Edition: 12.2004

/**PFK7S**/ **SINAMICS 1FK7 Synchronous Motors**
Configuration Manual
Order number: 6SN1197-0AD16-0BP0 Edition: 12.2004

/**PFT6S**/ **SINAMICS 1FT6 Synchronous Motors**
Configuration Manual
Order number: 6SN1197-0AD12-0BP0 Edition: 12.2004

© Siemens AG, 2005, All rights reserved

/**PFK7**/ **SIMODRIVE and SIMOVERT MASTERDRIVES 1FK7 Synchronous Motors**
Configuration Manual

Order no.: 6SN1197-0AD06-0AP2 Edition: 07.2005

/**PFT6**/ **SIMODRIVE and SIMOVERT MASTERDRIVES 1FT6 Synchronous Motors**
Configuration Manual

Order no.: 6SN1197-0AD02-0AP1 Edition: 07.2005

PROFIBUS Documentation

/**P1**/ **PROFIBUS-DP/DPV1 IEC 61158**
Basic Information, Tips and Tricks for Users
Hüthig; Manfred Popp, 2nd Edition

ISBN 3-7785-2781-9

/**P2**/ **PROFIBUS-DP, Getting Started**
PROFIBUS User Organization e.V.; Manfred Popp

Order number: 4.071

/**P3**/ **Distributed Layouts using PROFIBUS-DP**
Architecture and Fundamentals, Configuration and Use of PROFIBUS-DP with SIMATIC S7
SIEMENS; Publicis MCD Verlag; Josef Weigmann, Gerhard Kilian

Order no.: A19100-L531-B714
ISBN 3-89578-074-X

/**P4**/ **Manual for PROFIBUS Networks, SIEMENS**

Order number: 6GK1970-5CA20-0AA0

/**P5**/ **PROFIBUS Profile PROFIdrive Profile Drive Technology**
PROFIBUS Nutzerorganisation e. V.
Haid-und-Neu-Straße 7, D-76131 Karlsruhe

Order number: 3.172 Version 3.1 November 2002

/**IKPI**/ **SIMATIC NET, Industrial Communication and Field Equipment**
Catalog

Order number: E86060-K6710-A101-B4 Edition: 2005

/**PDP**/ **PROFIBUS Installation Guidelines**
Installation Guideline for PROFIBUS-FMS/DP
Installation and wiring recommendation for RS 485 Transmission

Order number 2.111 (German)
2.112 (English) Version 1.0

© Siemens AG, 2005, All rights reserved

Documentation for Safety Equipment

Note

For more information about technical documentation for "Safety Integrated", visit the following address:

http://www.siemens.de/safety

Some of the available documentation relating to safety is listed below.

/**LVP**/ **Low-Voltage Switchgear**
Catalog
Order number: E86060-K1002-P101-A5 Edition: 2005

/**LV10**/ **Industrial Switchgear**
Catalog
Order number: E86060-K1002-A101-A4 Edition: 2004

/**LV20**/ **BERO - Sensors for Automation Applications**
Catalog
Order number: E86060-K1803-A101-A3 Edition: 2004

/**LV30**/ **Products and Systems for Energy Distribution**
Catalog
Order number: E86060-K1801-A101-A4 Edition: 2004

/**MRL**/ **Directive 98/37/EEC of the European Parliament and Council**
Machine Directive
Bundesanzeiger-Verlags GmbH Edition: 22.06.1998

/**SISH**/ **Safety Integrated**
System Manual
Order no.: 6ZB5000-0AA01-0BA1 5th edition

/**SICD**/ **Safety Integrated**
CD-ROM
Order number: E20001-D10-M103-X-7400 Edition: 09.2004

© Siemens AG, 2005, All rights reserved

© Siemens AG, 2005, All rights reserved

Index

Numerics

1020
Explanation of the symbols (Part 1), 2-720
1021
Explanation of the symbols (Part 2), 2-721
1024
Explanation of the symbols (Part 3), 2-722
1025
Using BICO technology, 2-723
1510
CU320 input/output terminals, 2-725
1512
CX32 input/output terminals, 2-726
1520
PROFIBUS, 2-727
1530
Internal control/status words, 2-728
1550
Setpoint channel, 2-729
1580
Servo encoder evaluations (position, speed, temperature), 2-730
1590
Servo speed control and V/f control, 2-731
1610
Servo generation of the torque limits, 2-732
1630
Servo current control, 2-733
1680
Vector encoder evaluations (position, speed, temperature), 2-734
1690
Vector V/f control, 2-735
1700
Vector speed control and generation of the torque limits, 2-736
1710
Vector current control, 2-737
1750
Monitoring, faults, alarms, 2-738
1773
Basic Infeed, 2-739
1774
Active Infeed, 2-740
1775
Smart Infeed, 2-741
1790
Terminal Board 30 (TB30), 2-742
1840
Terminal Module 31 (TM31), 2-743
2100
CU320 digital inputs, electrically isolated (DI 0 ... DI 3), 2-745
2120
CU320 digital inputs, electrically isolated (DI 4 ... DI 7), 2-746
2130
CU320 Digital inputs/outputs, bidirectional (DI/DO 8 ... DI/DO 9), 2-747
2131
CU320 Digital inputs/outputs, bidirectional (DI/DO 10 ... DI/DO 11), 2-748
2132
CU320 Digital inputs/outputs, bidirectional (DI/DO 12 ... DI/DO 13), 2-749
2133
CU320 Digital inputs/outputs, bidirectional (DI/DO 14 ... DI/DO 15), 2-750
2220
CX32 digital inputs, electrically isolated (DI 0 ... DI 3), 2-752
2230
CX32 digital inputs/outputs, bidirectional (DI/DO 8 ... DI/DO 9), 2-753
2231
CX32 digital inputs/outputs, bidirectional (DI/DO 10 ... DI/DO 11), 2-754

© Siemens AG, 2005, All rights reserved

2410
PROFIBUS address, diagnostics, 2-756
2420
Telegrams and process data, 2-757
2440
Standard/manufacturer-specific receive telegram interconnection, 2-758
2441
STW1 control word interconnection (p2038 = 2), 2-759
2442
STW1 control word interconnection (p2038 = 0), 2-760
2443
STW1 control word interconnection (p2038 = 1), 2-761
2444
STW2 control word interconnection (p2038 = 0), 2-762
2445
STW2 control word interconnection (p2038 = 1), 2-763
2447
E_STW1 control word infeed interconnection, 2-764
2448
CU_STW control word interconnection, 2-765
2449
A_DIGITAL interconnection, 2-766
2450
Standard/manufacturer-specific send telegrams, interconnection, 2-767
2451
ZSW1 status word interconnection (p2038 = 2), 2-768
2452
ZSW1 status word interconnection (p2038 = 0), 2-769
2453
ZSW1 status word interconnection (p2038 = 1), 2-770
2454
ZSW2 status word interconnection (p2038 = 0), 2-771
2455
ZSW2 status word interconnection (p2038 = 1), 2-772
2456
MELDW status word interconnection, 2-773
2457
E_ZSW1 status word infeed interconnection, 2-774
2458
CU_ZSW status word interconnection, 2-775
2459
E_DIGITAL interconnection, 2-776
2460
Receive telegram, free interconnection via BICO (p0922 = 999), 2-777
2470
Send telegram, free interconnection via BICO (p0922 = 999), 2-778
2472
Status words, free interconnection, 2-779
2481
Receive telegram, free interconnection via BICO (p0922 = 999), 2-780
2483
Send telegram, free interconnection via BICO (p0922 = 999), 2-781
2501
Control word sequence control, 2-783
2503
Status word sequential control, 2-784
2505
Control word setpoint channel, 2-785
2520
Control word speed controller, 2-786
2522
Status word speed controller, 2-787
2534
Status word monitoring 1 , 2-788
2536
Status word monitoring 2 , 2-789
2537
Status word monitoring 3 , 2-790
2546
Control word faults/alarms, 2-791
2548
Status word, faults/warnings 1 and 2, 2-792
2610
Processor, 2-794
2634
Missing enable signals, line contactor control, 2-795
2701
Simple brake control (r0108.14 = 0), 2-797

© Siemens AG, 2005, All rights reserved

2704
Extended brake control/ zero speed detection (r0108.14 = 1), 2-798
2707
Extended braking control / open and close brake (r0108.14 = 1), 2-799
2711
Extended brake control/signal outputs (r0108.14 = 1), 2-800
2800
Parameter manager, 2-802
2802
Monitoring functions and faults/alarms, 2-803
2804
Status words, 2-804
2810
Safe Standstill (SH), 2-805
2814
Safe brake control (SBC), 2-806
3010
fixed speed setpoints, 2-808
3020
Motorized potentiometer, 2-809
3030
Main/added setpoint, setpoint scaling, jogging, 2-810
3040
Direction limitation and direction reversal, 2-811
3050
Suppression bandwidth and speed limiting, 2-812
3060
Basic ramp-function generator, 2-813
3070
Extended ramp-function generator, 2-814
3080
Ramp-function generator selection, status word, tracking--, 2-815
3090
Dynamic Servo Control (DSC), 2-816
3095
Generation of the speed limits (r0108.8 = 0), 2-818
4704
Position and temperature measurement, encoder 1 ... 3, 2-820
4710
Act. speed value and rotor pos. meas., motor encoder (encoder 1), 2-821
4720
Encoder interface, receive signals, encoder 1 ... 3, 2-822
4730
Encoder interface, send signals, encoder 1 ... 3, 2-823
4735
Reference mark search with equivalent zero mark, encoder 1 ... 3, 2-824
4740
Measuring input evaluation, measured value memory, encoder 1 ... 3, 2-825
5020
Speed setpoint filter and speed pre-control, 2-826
5030
Reference model/pre-control balancing/setpoint speed controller, 2-827
5040
Speed controller with encoder, 2-828
5050
Kp_n-/Tn_n adaptation, 2-829
5060
Torque setpoint, control type switchover, 2-830
5210
Speed controller without encoder, 2-831
5300
V/f control for diagnostics, 2-832
5490
Speed control configuration, 2-833
5492
Closed-loop control status word 1, 2-834
5493
Closed-loop control status word 3, 2-835
5610
Torque limiting/reduction/interpolator , 2-836
5620
Motor/generator torque limit, 2-837
5630
Upper/lower torque limit, 2-838
5640
Mode changeover, power/current limiting, 2-839
5650
Vdc_max controller and Vdc_min controller, 2-840
5710
Current Setpoint Filter, 2-841

© Siemens AG, 2005, All rights reserved

5714
Iq and Id controller, 2-842
5722
Field current input, flux controller, 2-843
5730
Interface to the Motor Module (gating signals, current actual values), 2-844
6004
Raw signal and temperature measurement, 2-846
6010
Act. speed value and rotor pos. meas., motor encoder (encoder 1), 2-847
6030
Speed setpoint, droop, 2-848
6031
Pre-control balancing for reference/acceleration model , 2-849
6040
Speed controller with / without encoder, 2-850
6050
Kp_n-/Tn_n adaptation, 2-851
6060
Torque setpoint, 2-852
6220
Vdc_max controller and Vdc_min controller, 2-853
6300
V/f characteristic and voltage boost, 2-854
6310
Resonance damping and slip compensation, 2-855
6320
Vdc_max controller and Vdc_min controller, 2-856
6490
Speed control configuration, 2-857
6491
Flux control configuration, 2-858
6492
Closed-loop control status word 1, 2-859
6493
Closed-loop control status word 3, 2-860
6630
Upper/lower torque limit, 2-861
6640
Current/power/torque limits , 2-862
6710
Current Setpoint Filter, 2-863
6714
Iq and Id controller, 2-864
6722
Field weakening characteristic, Id setpoint, 2-865
6723
Field weakening controller, flux controller for induction motor (p0300 = 1), 2-866
6724
Field weakening controller for synchronous motor (p0300 = 2), 2-867
6730
Interface to Motor Module for induction motor (p0300 = 1), 2-868
6731
Interface to Motor Module for synchronous motor (p0300 = 2), 2-869
6799
Display signals, 2-870
7010
Friction characteristic curve, 2-872
7950
Fixed values (r0108.16 = 1), 2-874
7954
Motorized potentiometer (r0108.16 = 1), 2-875
7958
Closed-loop control (r0108.16 = 1), 2-876
8010
Speed messages, 2-878
8012
Torque messages, motor blocked/stalled , 2-879
8013
Load monitoring (r0108.17 = 1), 2-880
8014
Thermal monitoring power section, 2-881
8016
Thermal monitoring motor, 2-882
8060
Fault buffer, 2-884
8065
Alarm buffer, 2-885
8070
Fault/warning trigger word (r2129), 2-886
8075
Fault/warning configuration, 2-887
8134
Test sockets, 2-889

© Siemens AG, 2005, All rights reserved

8560
Command data sets (CDS), 2-891
8565
Drive data set (DDS), 2-892
8570
Encoder data set (EDS), 2-893
8575
Motor data sets (MDS), 2-894
8720
Control word
sequential control infeed, 2-896
8726
Status word
sequential control infeed, 2-897
8732
Processor, 2-898
8734
Missing enabling signals, line contactor control
, 2-899
8750
Interface to the basic infeed power unit (control signals, actual values), 2-900
8760
Messages and monitoring functions, 2-901
8820
Control word
sequential control infeed, 2-903
8826
Status word
sequential control infeed, 2-904
8828
Status word infeed, 2-905
8832
Processor, 2-906
8834
Missing enabling signals, line contactor control
, 2-907
8850
Interface to the Smart Infeed (control signals, actual values), 2-908
8860
Messages and monitoring functions, supply voltage monitor, 2-909
8864
Messages and monitoring, line frequency and Vdc monitoring
, 2-910
8920
Control word
sequential control infeed, 2-912
8926
Status word
sequential control infeed, 2-913
8928
Status word infeed, 2-914
8932
Processor, 2-915
8934
Missing enabling signals, line contactor control
, 2-916
8940
Controller control factor reserve/controller DC link voltage
, 2-917
8946
Current pre-control/current controller/gating unit, 2-918
8950
Interface to the Active Infeed (control signals, actual values), 2-919
8960
Messages and monitoring functions, supply voltage monitor, 2-920
8964
Messages and monitoring, line frequency and Vdc monitoring
, 2-921
9100
TB30 digital inputs, electrically isolated (DI 0 ... DI 3), 2-923
9102
TB30 digital outputs, electrically isolated (DO 0 ... DO 3), 2-924
9104
TB30 analog inputs (AI 0 ... AI 1), 2-925
9106
TB30 analog outputs (AO 0 ... AO 1), 2-926
9204
Receive message frame, free PDO mapping (p8744 = 2), 2-928
9206
Receive message frame, predefined connection set (p8744 = 1), 2-929
9208
Send message frame, free PDO mapping (p8744 = 2), 2-930
9210
Send message frame, predefined connection set (p8744 = 1), 2-931
9220
Control word CANopen, 2-932

© Siemens AG, 2005, All rights reserved

9226
Status word CANopen, 2-933
9400
TM15DI/DO digital inputs/outputs, bidirectional (DI/DO 0 ... DI/DO 7), 2-935
9401
TM15DI/DO digital inputs/outputs, bidirectional (DI/DO 8 ... DI/DO 15), 2-936
9402
TM15DI/DO digital inputs/outputs, bidirectional (DI/DO 16 ... DI/DO 23), 2-937
9550
TM31 digital inputs, electrically isolated (DI 0 ... DI 3), 2-939
9552
TM31 digital inputs, electrically isolated (DI 4 ... DI 7), 2-940
9556
TM31 digital relay outputs, electrically isolated (DO 0 ... DO 1), 2-941
9560
TM31 digital inputs/outputs, bidirectional (DI/DO 8 ... DI/DO 9), 2-942
9562
TM31 digital inputs/outputs, bidirectional (DI/DO 10 ... DI/DO 11), 2-943
9566
TM31 analog input 0 (AI 0), 2-944
9568
TM31 analog input 1 (AI 1), 2-945
9572
TB31 analog outputs (AO 0 ... AO 1), 2-946
9576
TM31 temperature evaluation KTY/PTC, 2-947
9577
TM31 sensor evaluation KTY/PTC, 2-948
9674
TM41 incremental encoder emulation, 2-950
9880
VSM analog inputs (AI 0 ... AI 3), 2-952
9886
VSM temperature evaluation, 2-953
9887
VSM sensor evaluation KTY/PTC, 2-954

A

Access Level (Parameter), 1-18
Acknowledgement
Adjustable, 3-961
Default, 3-961
IMMEDIATELY, 3-958
POWER ON, 3-958
READY, 3-958
Active (parameter, C1(x), C2(x), U, T), 1-17
Active Infeed, 2-911
Contents, 2-911
Control factor controller, 2-917
Control word sequence control, 2-912
Current controller, 2-918
Current pre-control, 2-918
DC link voltage controller, 2-917
Gating unit, 2-918
Interface (control signals, actual values), 2-919
Line contactor control, 2-916
Messages and monitoring functions, 2-911
Processor, 2-915
Status word sequential control, 2-913
Supply voltage monitoring, 2-920
Address
Documentation (Fax, email), Preface-7
Internet, Preface-7
PROFIBUS, 2-756
Technical Support, Preface-7
Adjustable parameters, 1-13
Alarm
List of all alarms, 3-964
Numerical Range, 3-964
Alarm buffer, 2-883
Alarm value, 3-961
Analog inputs
Terminal Board 30 (TB30), 2-922
Terminal Module 31 (TM31), 2-938
Analog outputs
Terminal Board 30 (TB30), 2-922
Terminal Module 31 (TM31), 2-938
Axxxx, 3-960

© Siemens AG, 2005, All rights reserved

B

Basic Infeed, 2-895
- Contents, 2-895
- Control word sequence control, 2-896
- Interface (control signals, actual values), 2-900
- Messages and monitoring functions, 2-895, 2-901
- Missing enabling signals, line contactor control , 2-899
- Processor, 2-898
- Status word sequential control, 2-897

BI, Binector Input, 1-14
BICO technology, 2-723
Binector
- Input (BI), 1-14
- Output (BO), 1-14

Bit field (parameter), 1-21
BO, Binector Output, 1-14
Brake control
- Extended, 2-796
- Simple, 2-796

C

C1(x) - Status commissioning unit, 1-17
C2(x) - Status commissioning drive, 1-17
Catalogs, References-1181
Changeable (parameter, C1(x), C2(x), U, T), 1-17
CI, Connector Input, 1-14
Closed-loop control
- Active Infeed, 2-911
- Basic Infeed, 2-895
- Servo, 2-819
- Smart Infeed, 2-902
- Technology controller, 2-876
- Vector, 2-845

CO, Connector Output, 1-14
CO/BO, Connector/Binector Output, 1-14
Command data set (CDS), 1-18, 2-890, 2-891
Command data sets, 2-890
Communication
- CANopen, 2-927
- PROFIBUS, 2-755

Configuring messages, 2-883
Connector
- Input (CI), 1-14
- Output (CO), 1-14

Control mode, 2-830
Control Unit 320 (CU320)
- Digital inputs, 2-744
- Digital inputs/outputs, 2-744

Control words, 2-755
- Internal, 2-782
- Standard telegrams, 2-755

Controller extension 32 (CX32)
- Digital inputs, 2-751
- Digital inputs/outputs, 2-751

Converters
- Binector / connector, 2-779
- Connector / binector, 2-777, 2-780

Cxxxxx, 3-960

D

Data set, 1-18
- Command data set (CDS), 1-18
- Drive data set, DDS, 1-18
- Encoder data set, EDS, 1-18
- Motor data set, MDS, 1-18
- Power Module data set, PDS, 1-18

Data sets, 2-890
- Command data set, 1-18
- Drive data set, 1-18
- Encoder data set, 1-18
- Motor data set, 1-18
- Power Module data set, 1-18

Data Type (Parameter), 1-18
DC link voltage controller, 2-911
DCBRAKE, 3-958
DDS, drive data set, 1-18, 2-890, 2-892
Dependency (parameter), 1-21
Description (Parameter), 1-20
Digital inputs
- Control Unit 320 (CU320), 2-744
- Controller extension 32 (CX32), 2-751
- Terminal Board 30 (TB30), 2-922
- Terminal Module 15 for SINAMICS (TM15DI/DO), 2-934
- Terminal Module 31 (TM31), 2-938

Digital inputs/outputs
- Control Unit 320 (CU320), 2-744
- Terminal Module 31 (TM31), 2-938

digital outputs
- Control Unit 320 (CU320), 2-744
- Controller extension 32 (CX32), 2-751
- Terminal Board 30 (TB30), 2-922
- Terminal Module 15 for SINAMICS (TM15DI/DO), 2-934
- Terminal Module 31 (TM31), 2-938

Direction of rotation limiting, 2-807
Direction reversal, 2-807

© Siemens AG, 2005, All rights reserved

Directory
Contents, Contents-9
Contents: function diagrams, 2-711
List of Abbreviations, Abbreviations-1175
References, References-1181
Display
Alarms, 3-956
Faults, 3-956
DO, Drive object, 1-14
Drive Data Sets, 2-890
Drive object, 1-14
DSC (Dynamic Servo Control), 2-807, 2-816

E

EDS, encoder data set, 1-18, 2-890, 2-893
ENCODER, 3-958
Encoder data sets, 2-890

F

Factory setting, 1-20
Fault
Acknowledgement, 3-958, 3-961
Cause, 3-961
Display, 3-956
Explanation of list, 3-960
Fault location, 3-961
Fault reaction, 3-957, 3-961
General information, 3-956
How to distinguish from an alarm, 3-956
List of all faults, 3-964
Name, 3-961
Number, 3-960
Numerical Range, 3-964
Remedy, 3-962
Save on POWER OFF, 3-959
Fault buffer, 2-883
Design, 2-884
Save on POWER OFF, 3-959
Fault value, 3-961
fixed speed setpoints, 2-807
Fixed values, 2-721, 2-874
Free interconnection via BICO, 2-755
Free interconnection, status words, 2-779
Friction characteristic curve, 2-872
Function (Parameter), 1-20
Function diagrams: Active Infeed
Control word
sequential control infeed, 2-912
Controller control factor reserve/controller DC link voltage, 2-917
Current pre-control/current controller/gating unit, 2-918
Interface to the Active Infeed (control signals, actual values), 2-919
Messages and monitoring functions, supply voltage monitor, 2-920
Messages and monitoring, line frequency and Vdc monitoring
, 2-921
Missing enabling signals, line contactor control
, 2-916
Processor, 2-915
Status word infeed, 2-914
Status word
sequential control infeed, 2-913
Function diagrams: Basic Infeed
Control word
sequential control infeed, 2-896
Interface to the basic infeed power unit (control signals, actual values), 2-900
Messages and monitoring functions, 2-901
Missing enabling signals, line contactor control
, 2-899
Processor, 2-898
Status word
sequential control infeed, 2-897
Function diagrams: brake control
Extended brake control/signal outputs (r0108.14 = 1), 2-800
Extended brake control/
zero speed detection (r0108.14 = 1), 2-798
Extended braking control / open and close brake (r0108.14 = 1), 2-799
Simple brake control (r0108.14 = 0), 2-797

© Siemens AG, 2005, All rights reserved

Function diagrams: Communication Board CAN
Control word CANopen, 2-932
Receive message frame, free PDO mapping (p8744 = 2), 2-928
Receive message frame, predefined connection set (p8744 = 1), 2-929
Send message frame, free PDO mapping (p8744 = 2), 2-930
Send message frame, predefined connection set (p8744 = 1), 2-931
Status word CANopen, 2-933
Function diagrams: CU320 input/output terminals
Digital inputs, electrically isolated (DI 0 ... DI 3), 2-745
Digital inputs, electrically isolated (DI 4 ... DI 7), 2-746
Digital inputs/outputs, bidirectional (DI/DO 10 ... DI/DO 11), 2-748
Digital inputs/outputs, bidirectional (DI/DO 12 ... DI/DO 13), 2-749
Digital inputs/outputs, bidirectional (DI/DO 14 ... DI/DO 15), 2-750
Digital inputs/outputs, bidirectional (DI/DO 8 ... DI/DO 9), 2-747
Function diagrams: CX32 input/output terminals
Digital inputs, electrically isolated (DI 0 ... DI 3), 2-752
Digital inputs/outputs, bidirectional (DI/DO 10 ... DI/DO 11), 2-754
Digital inputs/outputs, bidirectional (DI/DO 8 ... DI/DO 9), 2-753
Function diagrams: data sets
Command data sets (CDS), 2-891
Drive data set (DDS), 2-892
Encoder data set (EDS), 2-893
Motor data sets (MDS), 2-894
Function diagrams: faults and warnings
Alarm buffer, 2-885
Fault buffer, 2-884
Fault/warning configuration, 2-887
Fault/warning trigger word (r2129), 2-886
Function diagrams: general information
Explanation of the symbols (Part 1), 2-720
Explanation of the symbols (Part 2), 2-721
Explanation of the symbols (Part 3), 2-722
Using BICO technology, 2-723
Function diagrams: internal control/status words
Control word faults/alarms, 2-791
Control word sequence control, 2-783
Control word setpoint channel, 2-785
Control word speed controller, 2-786
Status word monitoring 1 , 2-788
Status word monitoring 2 , 2-789
Status word monitoring 3 , 2-790
Status word sequential control, 2-784
Status word speed controller, 2-787
Status word, faults/warnings 1 and 2, 2-792
Function diagrams: measuring sockets
Test sockets, 2-889
Function diagrams: messages and monitoring functions
Load monitoring (r0108.17 = 1), 2-880
Speed messages, 2-878
Thermal monitoring motor, 2-882
Thermal monitoring power section, 2-881
Torque messages, motor blocked/stalled , 2-879
Function diagrams: overviews
Active Infeed, 2-740
Basic Infeed, 2-739
CU320 input/output terminals, 2-725
CX32 input/output terminals, 2-726
Internal control/status words, 2-728
Monitoring, faults, alarms, 2-738
PROFIBUS, 2-727
Servo current control, 2-733
Servo encoder evaluations (position, speed, temperature), 2-730
Servo generation of the torque limits, 2-732
Servo speed control and V/f control, 2-731
Setpoint channel, 2-729
Smart Infeed, 2-741
Terminal Board 30 (TB30), 2-742
Terminal Module 31 (TM31), 2-743
Vector current control, 2-737
Vector encoder evaluations (position, speed, temperature), 2-734
Vector speed control and generation of the torque limits, 2-736
Vector V/f control, 2-735

© Siemens AG, 2005, All rights reserved

Function diagrams: Safety Integrated
Monitoring functions and faults/alarms, 2-803
Parameter manager, 2-802
Safe brake control (SBC), 2-806
Safe Standstill (SH), 2-805
Status words, 2-804
Function diagrams: sequential control
Missing enable signals, line contactor control, 2-795
Processor, 2-794
Function diagrams: servo control
Mode changeover, power/current limiting, 2-839
Act. speed value and rotor pos. meas., motor encoder (encoder 1), 2-821
Closed-loop control status word 1, 2-834
Closed-loop control status word 3, 2-835
Current Setpoint Filter, 2-841
Encoder interface, receive signals, encoder 1 ... 3, 2-822
Encoder interface, send signals, encoder 1 ... 3, 2-823
Field current input, flux controller, 2-843
Interface to the Motor Module (gating signals, current actual values), 2-844
Iq and Id controller, 2-842
Kp_n-/Tn_n adaptation, 2-829
Measuring input evaluation, measured value memory, encoder 1 ... 3, 2-825
Motor/generator torque limit, 2-837
Position and temperature measurement, encoder 1 ... 3, 2-820
Reference mark search with equivalent zero mark, encoder 1 ... 3, 2-824
Reference model/pre-control balancing/setpoint speed controller, 2-827
Speed control configuration, 2-833
Speed controller with encoder, 2-828
Speed controller without encoder, 2-831
Speed setpoint filter and speed pre-control, 2-826
Torque limiting/reduction/interpolator , 2-836
Torque setpoint, control type switchover, 2-830
Upper/lower torque limit, 2-838
V/f control for diagnostics, 2-832
Vdc_max controller and Vdc_min controller, 2-840
Function diagrams: setpoint channel
Direction limitation and direction reversal, 2-811
Dynamic Servo Control (DSC), 2-816
fixed speed setpoints, 2-808
Main/added setpoint, setpoint scaling, jogging, 2-810
Motorized potentiometer, 2-809
Ramp-function generator (extended), 2-814
Ramp-function generator (simple), 2-813
Ramp-function generator selection, status word, tracking--, 2-815
Suppression bandwidth and speed limiting, 2-812
Function diagrams: setpoint channel not activated
Generation of the speed limits (r0108.8 = 0), 2-818
Function diagrams: Smart Infeed
Control word sequential control infeed, 2-903
Interface to the Smart Infeed (control signals, actual values), 2-908
Messages and monitoring functions, supply voltage monitor, 2-909
Messages and monitoring, line frequency and Vdc monitoring , 2-910
Missing enabling signals, line contactor control , 2-907
Processor, 2-906
Status word infeed, 2-905
Status word sequential control infeed, 2-904
Function diagrams: technology controller
Closed-loop control (r0108.16 = 1), 2-876
Fixed values (r0108.16 = 1), 2-874
Motorized potentiometer (r0108.16 = 1), 2-875
Function diagrams: technology functions
Friction characteristic curve, 2-872
Function diagrams: Terminal Board 30 (TB30)
Analog inputs (AI 0 ... AI 1), 2-925
Analog outputs (AO 0 ... AO 1), 2-926
Digital inputs, electrically isolated (DI 0 ... DI 3), 2-923
Digital outputs, electrically isolated (DO 0 ... DO 3), 2-924

© Siemens AG, 2005, All rights reserved

Function diagrams: Terminal Module 15 for SINAMICS (TM15DI/DO)
Digital inputs/outputs, bidirectional (DI/DO 0 ... DI/DO 7), 2-935
Digital inputs/outputs, bidirectional (DI/DO 16 ... DI/DO 23), 2-937
Digital inputs/outputs, bidirectional (DI/DO 8 ... DI/DO 15), 2-936
Function diagrams: Terminal Module 31 (TM31)
Analog input 0 (AI 0), 2-944
Analog input 1 (AI 1), 2-945
Analog outputs (AO 0 ... AO 1), 2-946
Digital inputs, electrically isolated (DI 0 ... DI 3), 2-939
Digital inputs, electrically isolated (DI 4 ... DI 7), 2-940
Digital inputs/outputs, bidirectional (DI/DO 10 ... DI/DO 11), 2-943
Digital inputs/outputs, bidirectional (DI/DO 8 ... DI/DO 9), 2-942
Digital relay outputs, electrically isolated (DO 0 ... DO 1), 2-941
Sensor evaluation KTY/PTC, 2-948
Temperature evaluation KTY/PTC, 2-947
Function diagrams: Terminal Module 41 (TM41)
Incremental encoder emulation, 2-950
Function diagrams: vector control
Act. speed value and rotor pos. meas., motor encoder (encoder 1), 2-847
Closed-loop control status word 1, 2-859
Closed-loop control status word 3, 2-860
Current Setpoint Filter, 2-863
Current/power/torque limits , 2-862
Display signals, 2-870
Field weakening characteristic, Id setpoint, 2-865
Field weakening controller for synchronous motor (p0300 = 2), 2-867
Field weakening controller, flux controller for induction motor (p0300 = 1), 2-866
Flux control configuration, 2-858
Interface to Motor Module for induction motor (p0300 = 1), 2-868
Interface to Motor Module for synchronous motor (p0300 = 2), 2-869
Iq and Id controller, 2-864
Kp_n-/Tn_n adaptation, 2-851
Pre-control balancing for reference/acceleration model , 2-849
Raw signal and temperature measurement, 2-846
Resonance damping and slip compensation, 2-855
Speed control configuration, 2-857
Speed controller with / without encoder, 2-850
Speed setpoint, droop, 2-848
Torque setpoint, 2-852
Upper/lower torque limit, 2-861
V/f characteristic and voltage boost, 2-854
Vdc_max controller and Vdc_min controller, 2-853, 2-856
Function diagrams: Voltage Sensing Module (VSM)
Analog inputs (AI 0 ... AI 3), 2-952
Sensor evaluation KTY/PTC, 2-954
Temperature evaluation, 2-953
Function Module, 1-14
Fxxxx, 3-960

© Siemens AG, 2005, All rights reserved

G

General
information about parameters, 1-12
General information
about faults and alarms, 3-956
about function diagrams, 2-719

H

Holding brake, 2-796
Hotline, Preface-7

I

Incremental encoder emulation, 2-949
Index
Factory setting, 1-20
Parameter, 1-13, 1-20
Information
Hotline, Preface-7
Internet address, Preface-7
Technical Support, Preface-7
Input terminals
Control Unit 320 (CU320), 2-744
Controller extension 32 (CX32), 2-751
Terminal Board 30 (TB30), 2-922
Terminal Module 31 (TM31), 2-938
Internal control/status words, 2-782
Internet, Preface-7

J

Jogging, 2-807, 2-810

L

Line contactor control, 2-795, 2-895, 2-902, 2-907, 2-911, 2-916
Linked parameter, 1-13
List
Abbreviations, Abbreviations-1175
All parameters, 1-24
Faults and Alarms, 3-964
Numerical ranges of alarms, 3-964
Parameter ranges, 1-22
Parameters for command data sets, 1-693
Parameters for drive data sets, 1-696
Parameters for encoder data sets, 1-705
Parameters for motor data sets, 1-706
References, References-1181
List of Abbreviations, Abbreviations-1175
Load monitoring (r0108.16 = 1), 2-877

M

Main/supplementary setpoint, 2-807
Manufacturer-specific telegrams, 2-755
MDS, motor data set, 1-18, 2-890, 2-894
Message buffer, 2-883
Messages, 2-877
f or n comparison value reached or exceeded, 2-878
Motor blocked, 2-879
Motor rotates forwards (n_act >= 0), 2-878
Motor stalled, 2-879
n_act < p2161, 2-878
n_act <= p2155, 2-878
n_act > n_max, 2-878
Ramp-up/ramp-down completed, 2-878
Speed setpoint/actual value deviation within tolerance bandwidth, 2-878
Torque setpoint < p2174, 2-879
Torque utilization < p2194, 2-879
Missing enable signals
Active Infeed, 2-916
Basic Infeed, 2-899
Drive, 2-795
Smart Infeed, 2-907
Monitoring functions, 2-877
Motor data sets, 2-890
Motor Holding Brake, 2-796
Motorized potentiometer, 2-807, 2-875

N

Name
Fault, 3-961
Parameter, 1-14
Warning, 3-961
Number
Fault, 3-960
Parameter, 1-13
Warning, 3-960
Numerical Range
Alarms, 3-964
Faults, 3-964
Parameter, 1-22

O

Object, 1-14
Objective of manual, Preface-6
OFF1, 3-957
OFF2, 3-957
OFF3, 3-957
Output terminals
Control Unit 320 (CU320), 2-744
Controller extension 32 (CX32), 2-751
Terminal Board 30 (TB30), 2-922
Terminal Module 31 (TM31), 2-938

© Siemens AG, 2005, All rights reserved

P

P group (parameter), 1-19
Parameter
- Access Level, 1-18
- Changeable in, 1-17
- Data set, 1-18
- Data type, 1-18
- Description, 1-20
- Full name, 1-14
- Function, 1-20
- Index, 1-13, 1-20
- Linked parameter, 1-13
- List of parameters, 1-24
- List of parameters for command data sets, 1-693
- List of parameters for drive data sets, 1-696
- List of parameters for encoder data sets, 1-705
- List of parameters for motor data sets, 1-706
- Name, 1-14
- Number, 1-13
- Numerical Range, 1-22
- P group, 1-19
- Safety guidelines, 1-21
- Short name, 1-14
- Unit, 1-19
- Unit choice, 1-19
- Unit group, 1-19
- Values, 1-20

PDS, Power Module data set, 1-18
PID controller (p0108.16 = 1), 2-873
Process data, 2-755
PROFIBUS, 2-755
PROFIBUS function diagrams
- Standard/manufacturer-specific receive telegram interconnection, 2-758
- Standard/manufacturer-specific send telegrams, interconnection, 2-767
- A_DIGITAL interconnection, 2-766
- CU_STW control word interconnection, 2-765
- CU_ZSW status word interconnection, 2-775
- E_DIGITAL interconnection, 2-776
- E_STW1 control word infeed interconnection, 2-764
- E_ZSW1 status word infeed interconnection, 2-774
- MELDW status word interconnection, 2-773
- PROFIBUS address, diagnostics, 2-756
- Receive telegram, free interconnection via BICO (p0922 = 999), 2-777, 2-780
- Send telegram, free interconnection via BICO (p0922 = 999), 2-778, 2-781
- Status words, free interconnection, 2-779
- STW1 control word interconnection (p2038 = 0), 2-760
- STW1 control word interconnection (p2038 = 1), 2-761
- STW1 control word interconnection (p2038 = 2), 2-759
- STW2 control word interconnection (p2038 = 0), 2-762
- STW2 control word interconnection (p2038 = 1), 2-763
- Telegrams and process data, 2-757
- ZSW1 status word interconnection (p2038 = 0), 2-769
- ZSW1 status word interconnection (p2038 = 1), 2-770
- ZSW1 status word interconnection (p2038 = 2), 2-768
- ZSW2 status word interconnection (p2038 = 0), 2-771
- ZSW2 status word interconnection (p2038 = 1), 2-772

pxxxx, 1-13

© Siemens AG, 2005, All rights reserved

R

Ramp-function generator, 2-807
Reaction to faults, 3-957
References, References-1181
Relay outputs, 2-938
Resetting faults, 3-961
rxxxx, 1-13

S

Safe brake control (SBC), 2-801
Safe Standstill (SH), 2-801
Safety Guidelines (parameters), 1-21
Safety Integrated, 2-801
Search tools for manual, Preface-6
Sequencer, 2-793
Servo control
  Contents, 2-819
  Current Setpoint Filter, 2-841
  Encoder interface, 2-822
  Iq and Id controller, 2-842
  Kp_n-/Tn_n adaptation, 2-829
  Measuring input, 2-825
  Position and temperature measurement, 2-820
  Reference mark search with equivalent zero mark, encoder 1 ... 3, 2-824
  Rotor pos. meas., 2-821
  Speed act. value sensing, 2-821
  Speed controller, 2-828
  Speed controller without encoder, 2-831
  Speed setpoint filter and pre-control, 2-826
  Switch control type, 2-830
  Torque setpoint, 2-830
  V/f control for diagnostics, 2-832
Setpoint channel, 2-807
Setpoint channel not activated, 2-817
Signal path in function diagrams, 2-720
Simple/extended brake control, 2-796
SINAMICS Safety Integrated, 2-801
Smart Infeed, 2-902
  Contents, 2-902
  Control word sequence control, 2-903
  Interface (control signals, actual values), 2-908
  Line contactor control, 2-907
  Messages and monitoring functions, 2-902
  Processor, 2-906
  Status word sequential control, 2-904
  Supply voltage monitoring, 2-909
Speed control
  Servo, 2-819
  Vector, 2-845
Speed messages, 2-877
Status words
  Internal, 2-782
  Standard telegrams, 2-755
STOP1, 3-958
STOP2, 3-958
Support, Preface-7
Support Request, Preface-7
Suppression bandwidths, 2-807

T

T - status Ready to run, 1-17
Target readers, Preface-6
Technical Support, Preface-7
Technology controller (p0108.16 = 1), 2-873
Technology functions, 2-871
Telegrams, 2-755
Terminal Board 30 (TB30)
  Analog inputs/outputs, 2-922
  Digital inputs/outputs, 2-922
Terminal Module 15 for SINAMICS (TM15DI/DO), 2-934
Terminal Module 31 (TM31), 2-938
  Analog inputs/outputs, 2-938
  Digital inputs/outputs, 2-938
  Relay outputs, 2-938
Terminal Module 41 (TM41), 2-949
Terminals
  Control Unit 320 (CU320), 2-744
  Controller extension 32 (CX32), 2-751
  Terminal Board 30 (TB30), 2-922
  Terminal Module 31 (TM31), 2-938
Test sockets, 2-888
The communication board CAN 10 (CBC10), 2-927
Thermal monitoring, 2-877
Torque Messages, 2-877
Triggering on messages (r2129), 2-883

U

U - status Run, 1-17
Unit (Parameter), 1-19

© Siemens AG, 2005, All rights reserved

V

V/f control
Servo, 2-832
Vector, 2-854
Values (Parameter), 1-20
Vector control
Contents, 2-845
Current Setpoint Filter, 2-863
Droop Function, 2-848
Field weakening characteristic, Id setpoint, 2-865
Flux control, 2-858
Iq and Id controller, 2-864
Kp_n-/Tn_n adaptation, 2-851
Resonance damping and slip compensation, 2-855
Rotor pos. meas., 2-847
Speed act. value sensing, 2-847
Speed control configuration, 2-857
Speed controller with / without encoder, 2-850
Torque setpoint, 2-852
V/f characteristic, 2-854
Vdc_max controller and Vdc_min controller, 2-856
Version
List of Faults and Alarms, 3-964
List of parameters, 1-24
List of parameters for command data sets, 1-693
List of parameters for drive data sets, 1-696
List of parameters for encoder data sets, 1-705
List of parameters for motor data sets, 1-706
Visualization parameters, 1-13
Voltage Sensing Module (VSM)
Analog inputs, 2-951
Sensor evaluation KTY/PTC, 2-951
Temperature evaluation, 2-951

W

Warning
Cause, 3-961
Display, 3-956
Explanation of list, 3-960
Fault location, 3-961
General information, 3-956
How to distinguish from a fault, 3-956
Name, 3-961
Number, 3-960
Remedy, 3-962

© Siemens AG, 2005, All rights reserved

© Siemens AG, 2005, All rights reserved

To

SIEMENS AG

A&D MC BMS

P.O. Box 3180

D-91050 Erlangen

Tel. +49 (180) 50 50 222

Fax +49 (9131) 98 2176

E-mail: motioncontrol.docu@erlf.siemens.de

Sender:

Your Name: _

Your Title: _

Your Company: _

Department: _

Street: _

City/State: _

Telephone: _

Fax: _

E-mail: _

Please tick your industry:

- ❒ Automotive
- ❒ Chemical
- ❒ Electrical
- ❒ Foods and beverages
- ❒ Instrumentation and control
- ❒ Mechanical engineering
- ❒ Petrochemicals
- ❒ Pharmaceuticals
- ❒ Plastics processing
- ❒ Pulp and paper
- ❒ Textiles
- ❒ Transportation
- ❒ Other _ _ _ _ _ _ _ _ _ _ _ _ _ _ _ _ _ _

© Siemens AG, 2005. All rights reserved

Comments/suggestions

Your comments and suggestions help us to improve the quality and usability of our documentation. Please complete the questionnaire and return it by mail or fax to Siemens.

Name of manual:	SINAMICS S List Manual
Order No. of Manual:	6SL3 097-2AP00-0BP3

Please answer the following questions, giving each one a mark between 1 = good to 5 = poor.

1. Do the contents meet your requirements? ☐
2. Is it easy to find the information you need? ☐
3. Is the text easy to understand? ☐
4. Is the level of technical detail appropriate for your needs? ☐
5. Please rate the quality of the graphics and tables. ☐

If you encountered any specific problems, please describe these in the space provided below:

_ _ _ _

Overview of SINAMICS Documentation (06/2005)

General Documentation/Catalogs

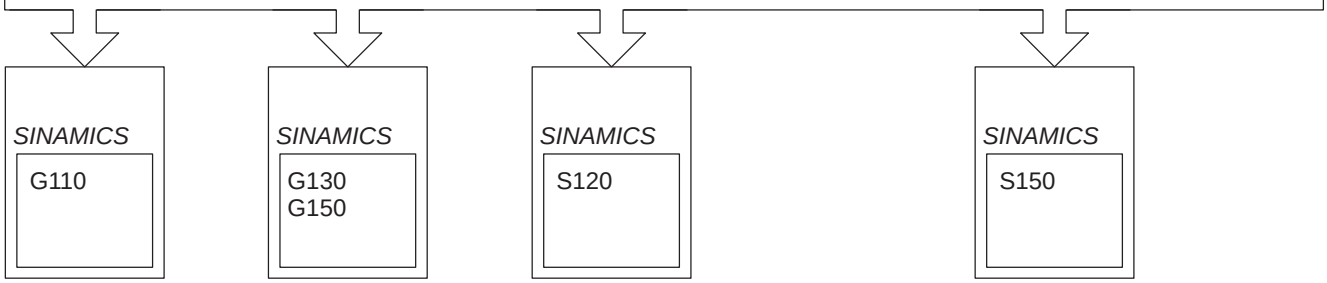

D11.1
Converter Chassis Units
0.12 – 3 kW

D11
Converter Chassis Units
Converter Cabinet Units

– D21.1: Vector Control Drive System
– D21.2: Servo Control Drive System

D21.3
Vector Control Cabinet Units
75 – 1200 kW

Manufactuer/Service-Documentation

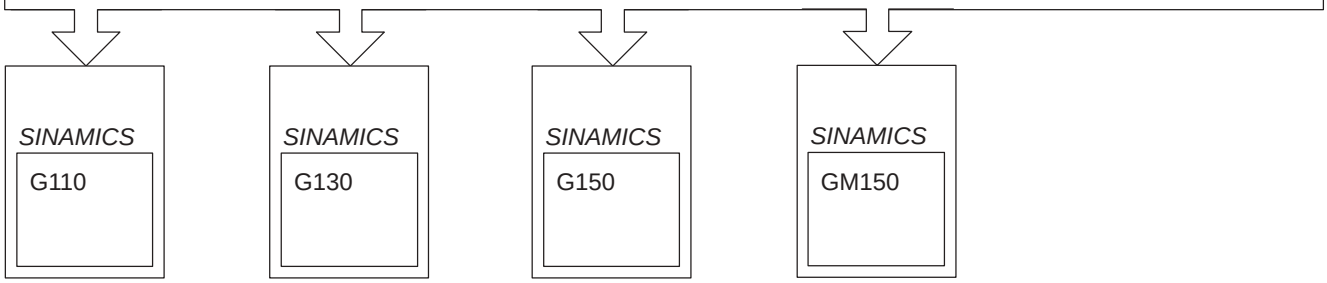

– Getting Started
– Operating Instructions
– List Manual

– Operating Instructions
– List Manual

– Operating Instructions
– List Manual

– Operating Instructions
– List Manual

Manufactuer/Service-Documentation

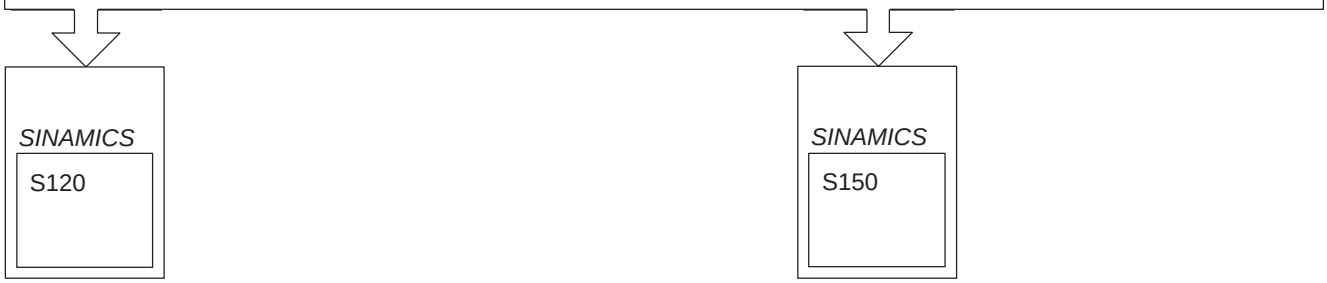

– Getting Started
– Equipment Manual Control Units and Additional System Components
– Equipment Manual Booksize Power Sections
– Equipment Manual Booksize Power Sections Cold-Plate
– Equipment Manual Chassis Power Sections
– Installation & Start-Up Manual
– Installation & Start-Up Manual CANopen
– Function Manual
– List Manual

– Operating Instructions
– List Manual

Manufactuer/Service-Documentation

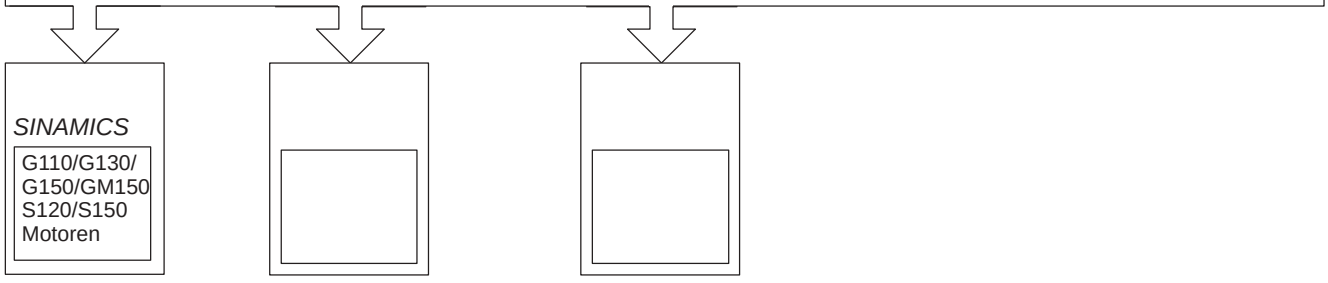

DOCONCD

Planning Guide
Motors

EMC
Installation Guideline

Siemens AG
Automation & Drives
Motion Control Systems
P.O. Box 3180, D-91050 Erlangen
Germany

www.siemens.com/motioncontrol

© Siemens AG, 2005
Subject to change without prior notice
Order No.: 6SL3097-2AP00-0BP3

Printed in Germany