SIEMENS

SIMATIC

Distributed I/O
Wall-mount enclosure 6DL2804-0xxxx

Hardware Installation Manual

03/2014

A5E34318117

Legal information

Warning notice system

This manual contains notices you have to observe in order to ensure your personal safety, as well as to prevent damage to property. The notices referring to your personal safety are highlighted in the manual by a safety alert symbol, notices referring only to property damage have no safety alert symbol. These notices shown below are graded according to the degree of danger.

⚠ DANGER
indicates that death or severe personal injury **will** result if proper precautions are not taken.

⚠ WARNING
indicates that death or severe personal injury **may** result if proper precautions are not taken.

⚠ CAUTION
indicates that minor personal injury can result if proper precautions are not taken.

NOTICE
indicates that property damage can result if proper precautions are not taken.

If more than one degree of danger is present, the warning notice representing the highest degree of danger will be used. A notice warning of injury to persons with a safety alert symbol may also include a warning relating to property damage.

Qualified Personnel

The product/system described in this documentation may be operated only by **personnel qualified** for the specific task in accordance with the relevant documentation, in particular its warning notices and safety instructions. Qualified personnel are those who, based on their training and experience, are capable of identifying risks and avoiding potential hazards when working with these products/systems.

Proper use of Siemens products

Note the following:

⚠ WARNING
Siemens products may only be used for the applications described in the catalog and in the relevant technical documentation. If products and components from other manufacturers are used, these must be recommended or approved by Siemens. Proper transport, storage, installation, assembly, commissioning, operation and maintenance are required to ensure that the products operate safely and without any problems. The permissible ambient conditions must be complied with. The information in the relevant documentation must be observed.

Trademarks

All names identified by ® are registered trademarks of Siemens AG. The remaining trademarks in this publication may be trademarks whose use by third parties for their own purposes could violate the rights of the owner.

Disclaimer of Liability

We have reviewed the contents of this publication to ensure consistency with the hardware and software described. Since variance cannot be precluded entirely, we cannot guarantee full consistency. However, the information in this publication is reviewed regularly and any necessary corrections are included in subsequent editions.

Siemens AG
Industry Sector
Postfach 48 48
90026 NÜRNBERG
GERMANY

Order number: A5E00378691N
Ⓟ 06/2014 Subject to change

Table of contents

Tables

Figures

Introduction 1

1.1 Purpose of this documentation

This manual contains all the information that you will require to install and use the device.

It is intended for persons who install the device mechanically, connect it electrically, set parameters and commission it, as well as for service and maintenance technicians.

1.2 History

The most important changes in the documentation compared with the previous edition are shown in the following table.

Edition	Comment
01/2008	First edition
08/2009	• Troubleshooting • New functions (see technical specifications) • Update owing to new standards
03/2014	Content changes: Safety instructions, enclosure

Safety information 2

2.1 General information

This device left the factory in a perfect state with regard to safety. To maintain this status and to ensure safe operation of the device, note and follow the instructions and warnings in this manual.

2.2 Laws and directives

Observe the provisions of the test certification valid for your country.

Electrical connection in potentially explosive atmospheres

When making electrical connections, observe the national regulations and laws for hazardous areas valid for your country. In Germany, for example, the following apply:

- Ordinance on Industrial Safety and Health
- Standard relating to the installation of electrical systems in hazardous areas DIN EN 60079-14 (previously VDE 0165, T1)

2.3 Qualified personnel

Qualified personnel are people who are familiar with the installation, mounting, commissioning, and operation of the product. These people have the following qualifications:

- They are authorized, trained or instructed in operating and maintaining devices and systems according to the safety regulations for electrical circuits, high pressures and aggressive as well as dangerous media.
- For devices intended for use in explosive atmospheres: They are authorized, trained, or instructed in working on electrical circuits for systems in potentially explosive atmospheres.
- They are trained or instructed in maintenance and use of appropriate safety equipment according to the safety regulations.
- They should be trained in first aid.

2.4 Measures

In the interest of safety, observe the following precautionary measures:

WARNING

Type of protection "Flameproof enclosure d"

Devices with "pressure-resistant encapsulation" protection may only be opened when the power has been disconnected.

Type of protection "Intrinsic safety i"

"Intrinsically-safe" devices lose their certification as soon as they are operated on circuits which do not correspond with the test certification valid in your country.

Type of protection "Increased safety e"

Devices with the type of protection "Increased safety" must not produce sparks or electric arcs during operation under normal conditions. Electrical equipment and parts must not exceed a rated voltage of 11 kV.

Type of protection "Mold encapsulation m"

Devices with the type of protection "Mold encapsulation" are potted in casting compound.

Type of protection "By means of enclosure t"

Devices with the type of protection "By means of enclosure" prevent the penetration of dust or reduce it to a harmless level. Explosive equipment can be installed. The temperature on the housing must not ignite the surrounding atmosphere.

WARNING

Use in environments with aggressive and dangerous media

The device can be operated both at high pressure and with aggressive and hazardous media. Therefore, improper use of this device may lead to serious injury and or considerable damage to property. Above all, it must be noted when the device was in use and is to be exchanged.

CAUTION

Electrostatic sensitive devices

This device contains electrostatic sensitive devices. ESD devices can be destroyed by voltages well below the threshold of human perception. These static voltages develop when you touch a component or electrical connection of a device without having discharged the static charges present on your body. The damage to a module as a result of overvoltage cannot usually be detected immediately. It may only become apparent after a long period of operation.

Description 3

3.1 Overview

The wall-mounted enclosures have the Ex e type of protection and are designed for use in hazardous areas ((Zones 1, 2, 21, 22; Mining: M2). The wall-mounted enclosure can be used for the installation of devices, components and fixtures with separate certificate.

The wall-mounted enclosures comply with the requirements of the following standards:

- EN/IEC 60079-0 General requirements
- EN/IEC 60079-7 Enhanced safety
- EN/ICE 60079-31 Protection by means of enclosure.

The ATEX certificate supplied with the wall-mounted enclosure does not take into account the installation of components.

The enclosures can be identified as follows depending on the application:

- II 2G Ex e Gb
- II 2D Ex t Db IPxx
- I M2 Ex e Mb

3.2 Application

- The wall-mounted enclosure is suitable for installation and operation of distributed I/Os, e.g. ET 200iSP or ET 200, in the following hazardous areas:
  - Device group I (mining, M2)
  - Device group II (Zones 1 + 2 gas, and Zones 21 + 22 dust)
- The device has been tested and certified for use in these hazardous areas.

3.3 Product features

The enclosure is made of stainless steel and is intended for wall mounting.
The device is intended for the installation of separately certified control and measuring devices such as:

- Distributed I/O systems:
  - ET 200iSP for use in Zones 1 and 2, Zones 21 and 22, and M2 (mining)
  - ET 200S for use in Zone 2 and Zone 22
  - ET 200M for use in Zone 2 and Zone 22
- Modular electro-pneumatic automation system AirLine Ex (type 8650, from the company Bürkert)
- Buffer stages and safety barriers
- Relays, buffer elements, fuses and circuit breakers
- Separate terminals for intrinsically safe and non-intrinsically safe circuits
- Command and signaling devices
- Temperature sensors
- Heating
- Lightning protection components
- FO coupler

3.4 Structure of the type designation

The enclosure has the following type designation:

6DL2804 - 0xxxx - Z***

= **0** Permissible operating temperature range above -20 °C, plastic CWE, black
= **1** Permissible operating temperature range above -40 °C, metal CWE
= **2** Permissible operating temperature range above -20 °C, plastic CWE, blue
= **6**Permissible operating temperature range above -20 °C, metal CWE, for mining

= 1 With 1 row CWE (for mining)
= 2 With 2 rows CWE (for mining)
= 3 With 3 rows CWE M16
= 4 With 3 rows CWE M20
= 5 With 5 rows CWE M16
= 6 With 5 rows CWE M20

= D Size 650 x 450 x 230 mm (W x H x D)
= E Size 950 x 450 x 230 mm (W x H x D)
= F Size 650 x 450 x 350 mm (W x H x D)
= G Size 950 x 450 x 350 mm (W x H x D)
= **H...**W Max. size 1 000 x 1 200 x 300 mm (W x H x D)

= A Zone 1 (gas)
= D Zone 21 (dust)
= M Mining M2

The enclosure sizes D...G have a cover which pivots upwards by means of gas-filled dampers.

The enclosure sizes H...W have doors with right-hand hinges (close on left).

Z***: This additional data (e.g. ZA01, ZA02, ...) serves to identify design versions which are not included in the data positions of the type designation. The additional data is only specified if required.

3.5 Design of enclosure

Standard enclosure 6DL2804-0xD...Gxx

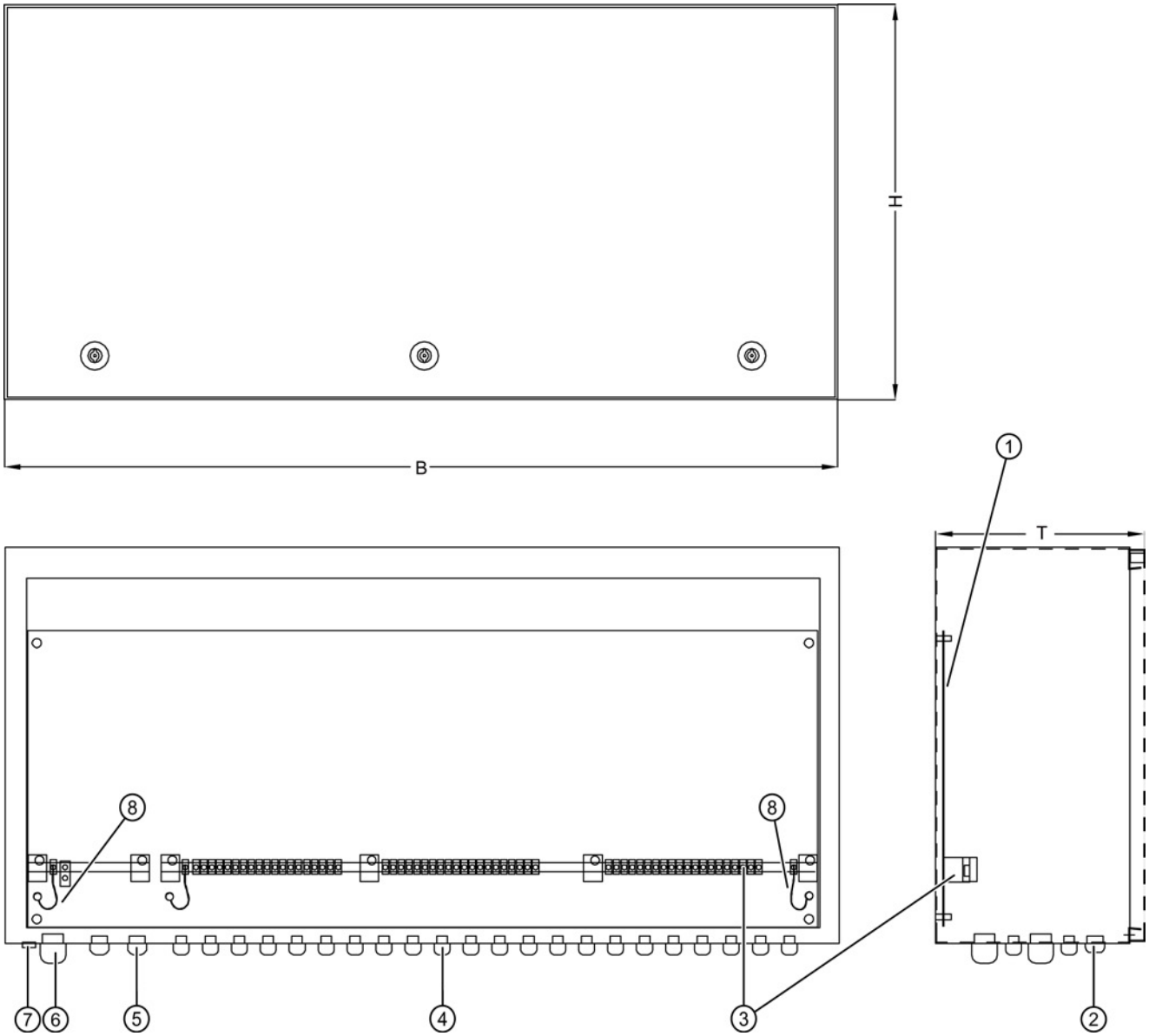

① Mounting plate
② Drainage/pressure compensation nozzle
③ Equipotential bonding rail with terminals
④ M16 or M20 cable glands
⑤ M20 cable glands
⑥ M32 cable glands
⑦ M6 grounding screw
⑧ Removable connection to enclosure ground

Figure 3-1 Standard enclosure 6DL2804-0xD...Gxx

W x H x D: See Structure of the type designation (Page 11)

Standard enclosure 6DL2804-0xH…Wxx

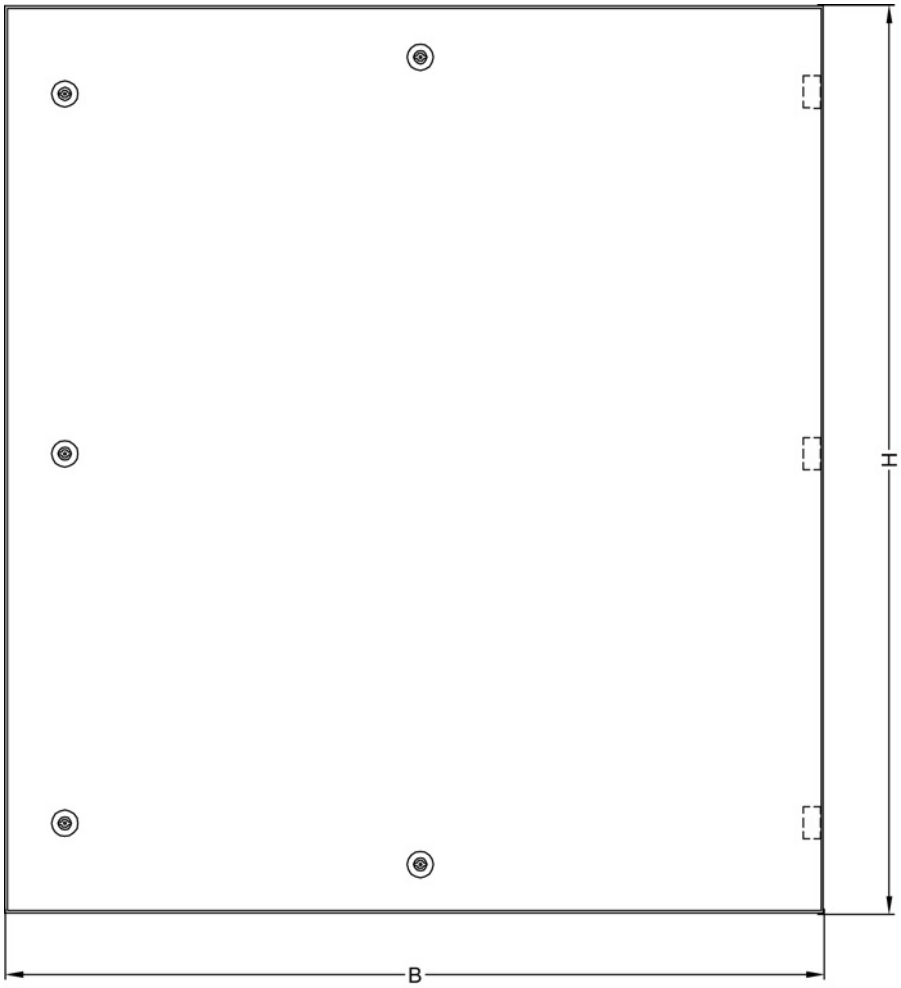

Figure 3-2 Standard enclosure 6DL2804-0xH...Wxx, view 1

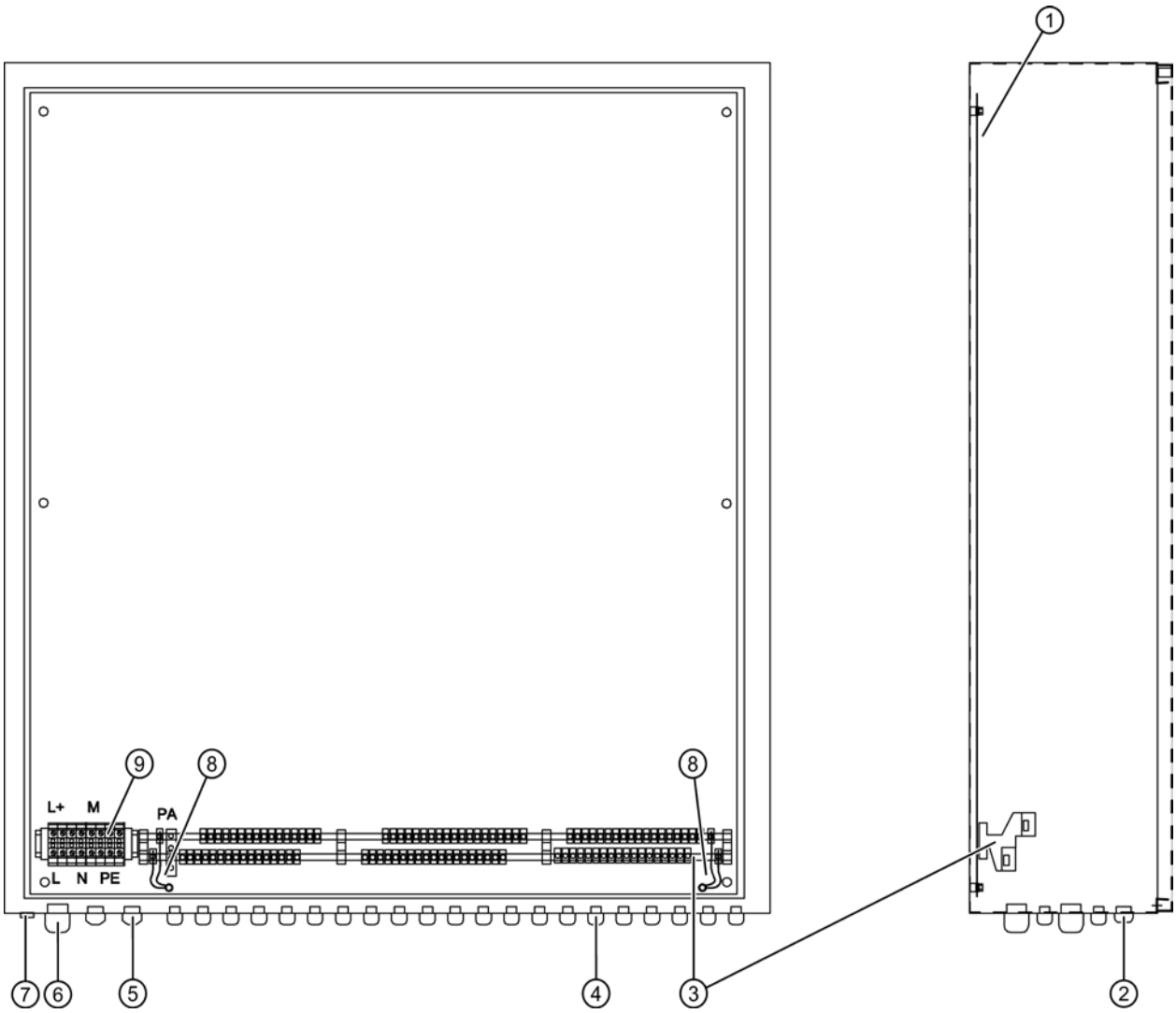

① Mounting plate
② Drainage/pressure compensation nozzle
③ Equipotential bonding rail with terminals
④ M16 or M20 cable glands *)
⑤ M20 cable glands *)
⑥ M32 cable glands *)
⑦ M6 grounding screw
⑧ Removable connection to enclosure ground
⑨ Optional power supply terminals

*) The size and number of cable glands can be defined specific to the project.

Figure 3-3 Standard enclosure 6DL2804-0xH…Wxx, view 2

3.6 Details of the enclosure

Degree of protection

The degree of protection depends on the enclosure size and the parts used such as cable entries, dummy plugs and climate nozzles. The nameplate specifies the degree of protection for which the enclosure is designed. The minimum degrees of protection are:

- Device group I: IP54/IP55
- Device group II: IP54 to IP66 (Zones 1 + 2)
- Device group II: IP64 to IP66 (Zones 21 + 22)

Operating temperature

The operating temperature range of the enclosure depends on the temperature range of the parts used, and can differ from the actual operating temperature range:

- -40 °C to +75 °C: only for the enclosure versions 6DL2804-0xxx1
- 0 °C to +75 °C

The nameplate specifies the permissible operating temperature range in each case.

- Prior to installation of components, check the operating temperature range of the complete setup. The operating temperature range for the complete setup may be limited by the maximum permissible operating temperature of the components and the dissipated heat produced in the enclosure.

Climate nozzles provide pressure compensation and drainage in the event of varying climatic conditions.

- In the case of aggressive environments, check whether use of the enclosure is possible with the material in question. Delivery of enclosures with appropriate surface protection is possible for use with aggressive environmental conditions.

Cable and wiring entries (CWE)

- When fitting cables, observe the manufacturer's data on the tightening torques of the cable and wiring entries.
- Use the tightening torque of the clamping screw when connecting the cables.
- Relieve the tension on the cables outside the enclosure so that the cable gland is not stressed.
- For additional information and technical specifications, refer the respective manufacturer documentation, in particular:
  - Technical specifications, clamping ranges for cables
  - Notes on use, installation, mounting, commissioning and maintenance

Note

Use the supplied red dummy plugs to close any cable glands not in use. Only then is it ensured that the degree of protection is retained.

Equipotential bonding rail

The equipotential bonding rail (10 x 3 mm) with terminals (up to 4 mm²) is used to contact the cable shields. Alternatively, you can also use other terminals here, e.g. KLBüCo from the company Weidmüller (not included in the scope of delivery)

Connect the equipotential bonding wire to the bonding terminal (0.75 to 35 mm²).

Short lines connect the equipotential bonding rail to the mounting plate and thus to the enclosure. In cases where the ground and equipotential bonding conductors are installed separately, this connection can be disconnected.

Note

Also observe the installation guidelines in the ET200iSP operating instructions, Section 5.2 "Using ET 200iSP with equipotential bonding".

Wall supports

Screw the wall supports onto the enclosures using M6/M8 screws depending on the enclosure size. These are included with the enclosure accessories. To secure the enclosure, use 8 mm diameter screws and lock washers.

Grounding connection

The M6/M8 ground connection screw is used for the PE conductor; use a cable with lug for this. To prevent the screw from becoming loose, make sure you use the lock washer. Connecting the grounding cable avoids static charge which is important, in particular, for dust explosion protection.

Installed components

The enclosure nameplate specifies the parameters within which the installed components can be used.

Observe the following if you subsequently connect equipment and the required cables on site:

- Read and observe the manufacturer's instructions, especially notes, warnings and information on special features.
- Electrical equipment as well as combinations of equipment can impair the intrinsic safety of the circuits as a result of their electrical parameters. Prior to installing equipment, check that the intrinsic safety of the circuit is still guaranteed.

Mounting

4

Note

- When installing control and measuring devices in the Ex enclosure, keep to the instructions in the relevant product descriptions and the technical specifications in the data sheets.
- All control and measuring devices installed in the enclosure must be separately certified for the relevant hazardous zone.
- Run the tests prescribed in the relevant national regulations for the installed control and measuring devices.

Note

- Install and operate the distributed I/O device in hazardous areas according to the specifications of the EC-type examination certificate according to ATEX and these operating instructions or the standards and directives valid in your country.
- Assembly, installation, commissioning and maintenance may only be performed by qualified personnel.
- The devices and installed components must only be used for their intended purpose.

4.1 Transport and storage

Pack and store the enclosure for transport or storage so that there can be no undue strain on the enclosure, particularly on its top cover. If there is too much strain on the top cover of the enclosure, this can damage the seal.

Do not place the enclosure on the cable glands fitted in its base, otherwise the glands will be damaged.

4.2 Mounting the enclosure

The enclosure is intended for wall mounting and should be secured with the wall supports supplied with it. Use the following template for the drilling.

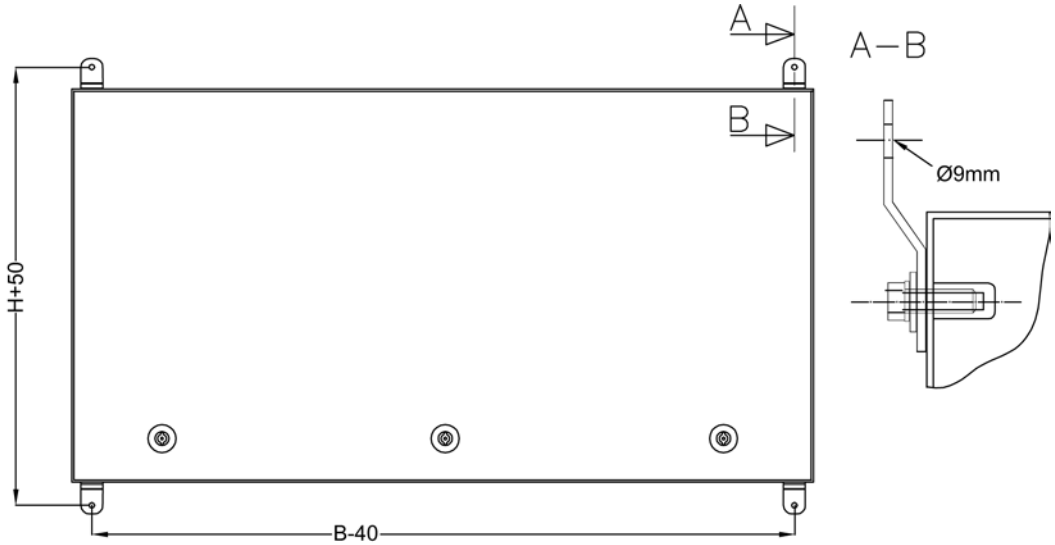

Figure 4-1 Drilling template for securing the device

⚠ CAUTION
Danger of injury when the enclosure is opened
When opening the enclosure with pivoting cover, the cover is pressed upwards by means of the pressure of the dampers. When opening, press against the cover with your hand.

Note

- Remember the maximum thermal load on the cables and wiring. The degree of protection is only ensured when suitable cables and wires are used and correctly installed.
- Note that it is only permitted to connect and disconnect the cables to the power supply module if the module has been powered down.
- The degree of protection is reduced when the enclosure is mounted vertically.

Procedure

1. To open the enclosure, unlock using a double-bit key (included with the enclosure). Hold the cover firmly while unlocking to make sure that it does not spring up as a result of the pressure of the dampers.
2. Mount the wall support (included in the enclosure accessories) to the rear panel of the enclosure in accordance with Fig. 4-1. Secure the enclosure using 8 mm diameter screws and lock washers at the location of use.
3. Install and secure the cables entering the enclosure and make sure they have adequate strain relief. The cable entry may only be used for strain relief if suitable cable glands are used.
4. Route the cables from below through the associated glands and tighten the clamping screw of the gland at the torque specified in the manufacturer's instructions.
5. Make a short connection between the cable screen and the equipotential bonding rail.
6. If you remove the the detachable connections between equipotential bonding rail and mounting plate, you can install the bonding rail ungrounded if required (see Figure 3-1 Standard enclosure 6DL2804-0xD...Gxx (Page 12)).
7. Route and connect in accordance with EN 60079-11:
   - The power supply cable
   - The bus cable
   - The signal cables

   In hazardous areas, the installation regulations according to EN 60079-14 and the national regulations must also be observed.
8. If you replace installed components, follow the instructions in the manufacturer's description of the device.

See also

Design of enclosure (Page 12)

4.3 Installing the enclosure outdoors

The enclosure should have at least IP56 protection when installing outdoors. This prevents damaging amounts of dirt or water from penetrating the enclosure under normal ambient conditions. Take the following additional protective measures depending on the environment of the installation location:

- Avoid subjecting the enclosure permanently to water (for example, snow).
- Remember that direct sunlight can cause excessive temperatures in the interior of the enclosure. In locations where this can occur, provide additional protection with some form of roofing.
- Note that opening the enclosure at ambient temperatures below 0 °C can damage the seal as a result of freezing.
- Condensation may be produced within the enclosure due to temperature variations. Climate nozzles are therefore installed to permit drainage and pressure compensation. Ensure when mounting the enclosure that the climate nozzles are at the lowest position.
- If you want to use the device in an aggressive environment, check whether this is possible with the material in question.

Maintenance and servicing

5

- Select maintenance cycles so that problems can be recognized in good time. Check the following:
  - The device for visible damage
  - That the permitted temperatures are not exceeded
  - That the cables are securely connected,
  - Damage to cable and wiring entries
  - Enclosure gaskets for cracks and damage
  - Bonding of seal on the enclosure cover and at the bonding positions
  - Surface of seal for damage
- If the seal is damaged, replace the complete cover if necessary.
- If there is damage to the enclosure, there is a risk that the degree of protection is no longer valid. In some cases, this might necessitate replacement of the enclosure.
- If there is damage to cable and wiring entries, only replacement with original parts is permitted.
- Check regularly, once a year, that the cable and line entries are securely in place and properly sealed. Check the tightening torques.

  If necessary, re-tighten the glands to the torques specified by the manufacturer. For information on the torques, refer to the respective manufacturer documentation.

Technical specifications

6

Table 6- 1 Technical specifications of enclosures 6DL2804-0xDxx to 0xGxx

6DL2804-	0xDxx	0xExx	0xFxx	0xGxx
Ex marking	II 2G Ex e IIC Gb II 2D Ex tb IIIC Db			
Degree of protection [1]	IP55 to IP66 with device group II 2G IP64 to IP66 with device group II 2D			
Dimensions [mm]: W x H x D	650 x 450 x 230	950 x 450 x 230	650 x 450 x 350	950 x 450 x 350
Material	Stainless steel: DIN 1.4404			
Material thickness [mm]	1.5			
Weight [kg]	19	26	20	27
Cover seal	Silicone rubber			
Cable entries for	Made of plastic or metal			
Voltage	2 M32 (cable diameter 13 to 21 mm)			
Bus	4 M20 (cable diameter 6 to 13 mm)			
Signals	M16	M16	M20	M20
Cable size [mm]	Diam. 4 to 9	Diam. 4 to 9	Diam. 6 to 13	Diam. 6 to 13
With 3 rows	39	66	36	57
With 5 rows	65	110	60	95
Equipotential bonding rail	3 x 10 mm galvanized Cu with terminals 4 and 35 mm²			
Protective conductor connector	M6 screw, at least 16 mm² with cable lug			
Rated voltage/current [2]	Max. 1 000 V / 100 A			
Operating temperature range	-20 °C to +75 °C or -40 °C to +75 °C[3]or 0 °C to 75 °C			
Permissible humidity	Max. 95%			

[1] The degree of protection depends on that of the installed parts and the enclosure size.

[2] The actual electrical values depend on the electrical equipment installed. The manufacturer specifies the final values within the framework of these limits.

[3] The temperature range of -40 °C only applies to the enclosure types 6DL2804-0xxx1.

Table 6- 2 Technical specifications of enclosures 6DL2804-0MDxx and 0MExx

6DL2804-	0MDxx		0MExx	
Ex marking	I M2 Ex e I Mb			
Degree of protection [1]	IP55			
Dimensions [mm]: W x H x D	650 x 450 x 230		950 x 450 x 230	
Material	Stainless steel: DIN 1.4404			
Material thickness [mm]	1.5			
Cover seal	Silicone rubber			
Cable entries for	Made of metal			
Voltage and bus	5 M25 (cable diameter 9 to 12 mm)			
Signals	M25	M32	M25	M32
Cable size [mm]	Diam. 9 to 12	Diam. 18 to 21	Diam. 4 to 9	Diam. 4 to 9
With 1 row	2	5	2	9
With 2 rows	4	10	4	18
Equipotential bonding rail	3 x 10 mm galvanized Cu with terminals 4 and 35 mm²			
Protective conductor connector	M6 screw, at least 16 mm² with cable lug			
Rated voltage/current [2]	Max. 1 000 V / 100 A			
Operating temperature range	-20 °C to +75 °C or -40 °C to +75 °C [3]			
Permissible humidity	Max. 95%			

[1] The degree of protection depends on that of the installed parts and the enclosure size.

[2] The actual electrical values depend on the electrical equipment installed. The manufacturer specifies the final values within the framework of these limits.

[3] The temperature range of -40 °C only applies to the enclosure types 6DL2804-0xxx1.

Table 6- 3 Technical specifications of enclosures 6DL2804-0xHxx to 0xWxx

6DL2804-	0xHxx to 0xWxx
Ex marking	II 2G Ex e IIC Gb II 2D Ex tb IIIC Db
Degree of protection [1]	IP54 to IP65
Dimensions [mm]: W x H x D	Max. 1 000 x 1 200 x 300
Material	Stainless steel: DIN 1.4301
Material thickness [mm]	1.5 and 2, depending on enclosure size
Cover seal	Silicone rubber
Cable entries	Made of plastic or metal
	M32 (cable diameter 13 to 21 mm), number depending on requirements
	M20 (cable diameter 6 to 13 mm), number depending on requirements
	M16 (cable diameter 4 to 9 mm), number depending on requirements
Equipotential bonding rail	3 x 10 mm galvanized Cu with terminals 4 to 35 mm²
Protective conductor connector	M6 screw, at least 16 mm² with cable lug
Rated voltage/current [2]	Max. 1 000 V / 100 A
Operating temperature range	-20 °C to +75 °C or -40 °C to +75 °C[3]or 0 °C to 75 °C
Permissible humidity	Max. 95%

[1] The degree of protection depends on that of the installed parts and the enclosure size.

[2] The actual electrical values depend on the electrical equipment installed. The manufacturer specifies the final values within the framework of these limits.

[3] The temperature range of -40 °C only applies to the enclosure types 6DL2804-0xxx1.

Connection diagram

7

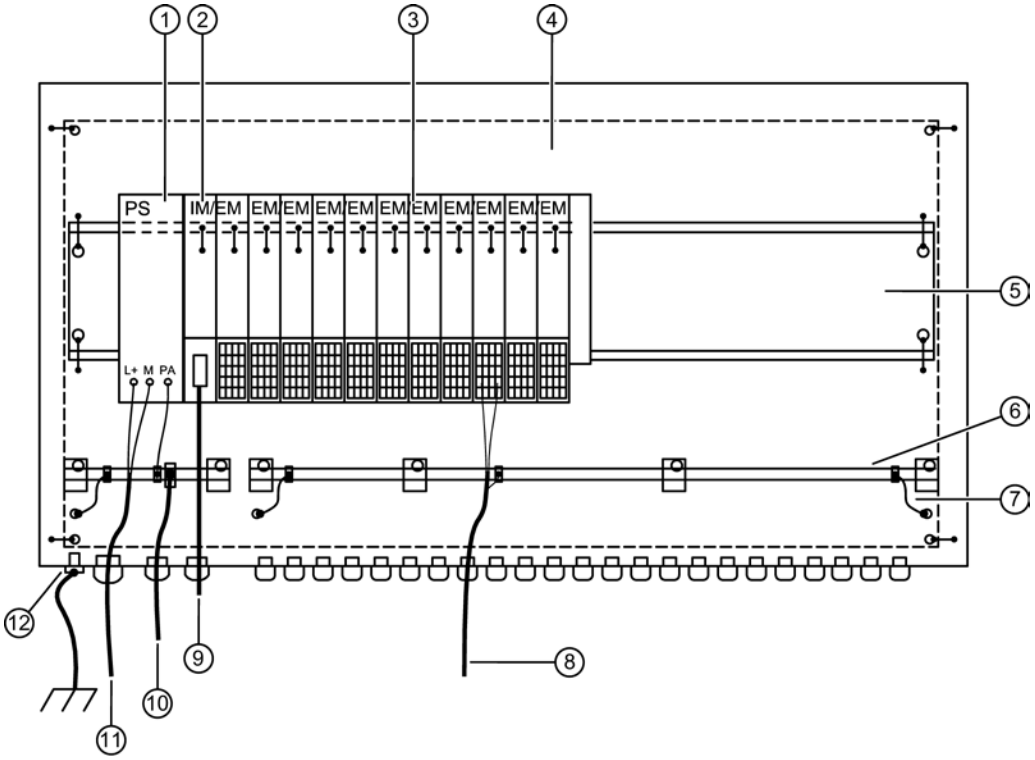

⟷	Fixed galvanic electrical clamp or screw connection inside enclosure	⟿	Cable connection can be disconnected inside enclosure
①	Power supply terminal module with componentry	⑦	Connection from the equipotential bonding rail to the enclosure
②	IM / EM terminal module with IM componentry (IM = interface module, EM = electronic module)	⑧	Cable for signal lines shield on equipotential bonding rail
③	EM / EM terminal module (EM = electronic module)	⑨	PROFIBUS cable to IM
④	Mounting plate	⑩	Bonding cable
⑤	Mounting rail	⑪	Power supply (line to power supply)
⑥	Equipotential bonding rail with terminals	⑫	M6 grounding connection external

Figure 7-1 Fixed and detachable connections to ground and equipotential bonding rail

Dimensional drawings

8

Dimensions for installation of ET200iSP

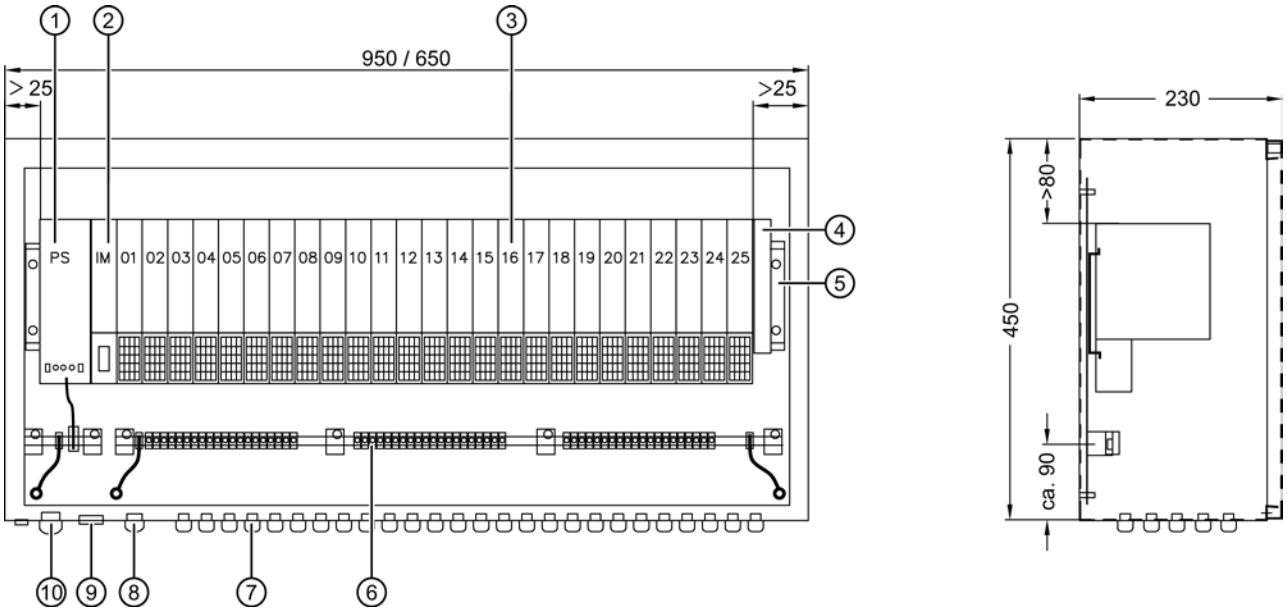

① Power supply (PS) terminal module

② IM/EM terminal module with IM component (IM = interface module, EM = electronic module)

③ EM/EM terminal module with I/O component (I/O = input/output)

④ Termination module

⑤ Mounting rail

⑥ Equipotential bonding rail with terminals

⑦ Cable entry for signal lines M16 (4 to 9 mm) or M20 (6 to 13 mm)

⑧ Cable and wiring entry for PROFIBUS M20

⑨ Screw gland for pressure/climate compensation

⑩ Cable and wiring entry for power supply M32 (13 to 21 mm)

Figure 8-1 Dimensional drawing of wall-mounted enclosure 6DL2804-0xD...Gxx with installation of ET200 iSP components

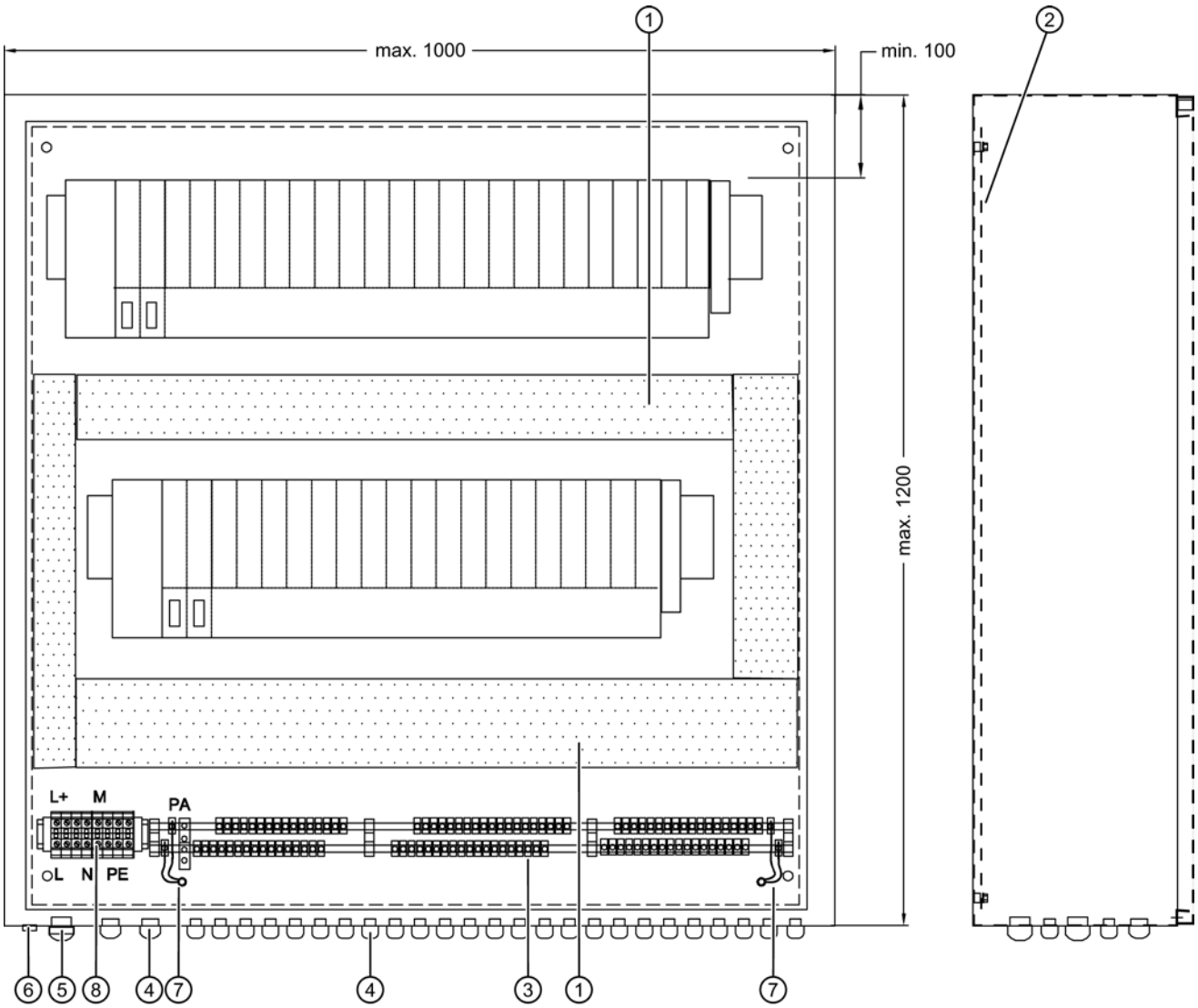

① Cable duct
② Mounting plate
③ Equipotential bonding rail with terminals
④ Cable glands
⑤ Venting nozzle
⑥ PE connection
⑦ Removable connection to enclosure ground
⑧ Optional power supply terminals

Figure 8-2 Dimensional drawing of wall-mounted enclosure 6DL2804-xxH...Wxx with installation of ET200 iSP components

ESD Guidelines

9

What does ESD mean?

All electronic modules are equipped with large-scale integrated ICs or components. Due to their design, these electronic elements are highly sensitive to overvoltage, and thus to any electrostatic discharge.

The electrostatic sensitive components/modules are commonly referred to as ESD devices. This is also the international abbreviation for such devices.

ESD modules are identified by the following symbol:

NOTICE
ESD devices can be destroyed by voltages well below the threshold of human perception. These static voltages develop when you touch a component or electrical connection of a device without having discharged the static charges present on your body. The electrostatic discharge current may lead to latent failure of a module, that is, this damage may not be significant immediately, but in operation may cause malfunction.

Electrostatic charging

Every person without a conductive connection to the electrical potential of his/her surroundings can be electrostatically charged.

The figure below shows the maximum electrostatic charge that can build up on a person coming into contact with the materials indicated. These values correspond to IEC 801-2 specifications.

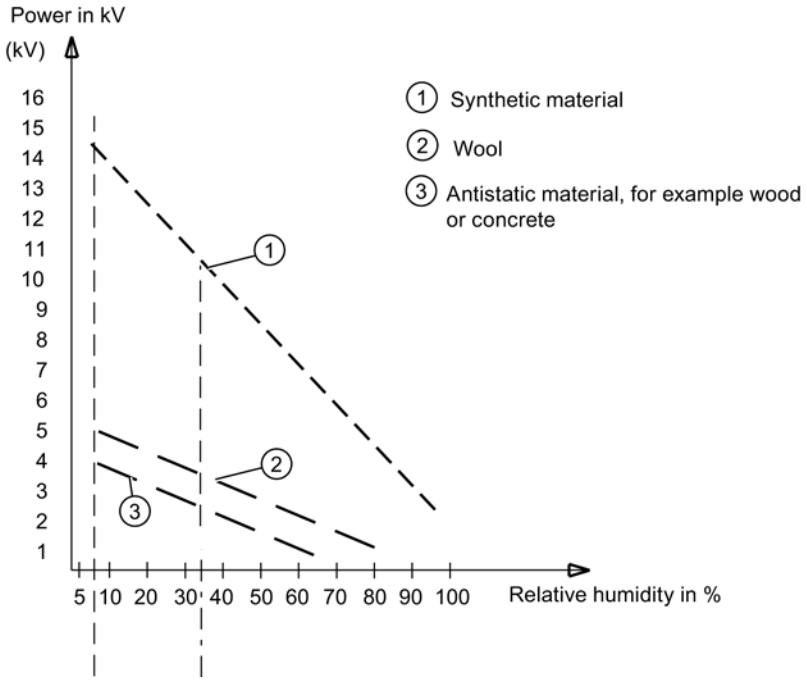

Figure 9-1 Electrostatic voltages on an operator

Basic protective measures against electrostatic discharge

- Ensure good equipotential bonding:
  When handling electrostatic sensitive devices, ensure that your body, the workplace and packaging are grounded. This prevents electrostatic charge.
- Avoid direct contact:
  As a general rule, only touch electrostatic sensitive devices when this is unavoidable (e.g. during maintenance work). Handle the modules without touching any chip pins or PCB traces. In this way, the discharged energy can not affect the sensitive devices.

  Discharge your body before you start taking any measurements on a module. Do so by touching grounded metallic parts. Always use grounded measuring instruments.

Service and support

10

Local information

If you have questions about the products described in this document, you can find help at:
http://www.siemens.com/automation/partner

Technical documentation for SIMATIC products

Further documentation for SIMATIC products and systems can be found at:
http://www.siemens.de/simatic-tech-doku-portal

Easy shopping with the A&D Mall

Catalog & online ordering system: http://www.siemens.com/automation/mall

Training

All the training options are listed at: http://www.siemens.com/sitrain

Find a contact at: Phone: +49(911) 895-3200

Technical support

Tel +49 180 5050 222
Fax +49 180 5050 223
http://www.siemens.com/automation/service

You will find support request web form at:
http://www.siemens.de/automation/support-request

If you contact customer support, please have the following information available for the technician:

- Order No. (MLFB) of the device

Online support

Product information, support and service, right through to the technical forum, can be found at: http://www.siemens.com/automation/service&partner

Index

T

W

SIEMENS

EU-Konformitätserklärung / *EU-Declaration of Conformity*

Nr./*No.* A5E32187773A-002

Hersteller: Siemens AG, I IA CE SE
Manufacturer

Anschrift: Breslauer Str. 5, D-90766 Fuerth
Address

Produktbezeichnung: Aufbaugehäuse, 6DL2804-0A***1), 6DL2804-0D***1), 6DL2804-0M***1)
Product identification: Wall-mount enclosure, 6DL2804-0***1), 6DL2804-0D***1), 6DL2804-0M***1)

1) * sind Platzhalter für Varianten, für die diese EU-Konformitätserklärung gültig ist.
** are wildcard characters for variants this EU Declaration of Conformity is valid for.*

Das bezeichnete Produkt entspricht in der gelieferten Ausführung den Bestimmungen folgender EU-Richtlinie(n):

94/9/EG RICHTLINIE DES EUROPÄISCHEN PARLAMENTS UND DES RATES vom 23. März 1994 zur Angleichung der Rechtsvorschriften der Mitgliedstaaten für Geräte und Schutzsysteme zur bestimmungsgemäßen Verwendung in explosionsgefährdeten Bereichen

The designated product as delivered is in conformity with the provisions of the following EU-Directive(s):

94/9/EC *DIRECTIVE OF THE EUROPEAN PARLIAMENT AND OF THE COUNCIL of 23 March 1994 on the approximation of the laws of the Member States concerning equipment and protective systems intended for use in potentially explosive atmospheres*

ATEX-Kennzeichnung: CE 0158 Ex **II 2G Ex e IIC Gb** ..... Typ 6DL2804-0A***
ATEX marking **II 2D Ex tb IIIC Db** ..... Typ 6DL2804-0D***
I M2 Ex e I Mb ..... Typ 6DL2804-0M***

Name, Anschrift, Kennnummer der notifizierten Stelle
name, address, identification number of the notified body
DEKRA EXAM GmbH, Dinnendahlstr. 9, 44809 Bochum, 0158

Nummer der EG-Baumusterprüfbescheinigung
number of the EC type-examination certificate
DMT 02 ATEX E 249 U

Zulassung Qualitätssicherungssystem
approval of quality assurance system
BVS 11 ATEX ZQS/E111

Diese Erklärung bescheinigt die Übereinstimmung mit den genannten Richtlinien, ist jedoch keine Beschaffenheits- oder Haltbarkeitsgarantie. Die Sicherheitshinweise der mitgelieferten Produktdokumentation sind zu beachten.

This declaration certifies the compliance with the indicated directives but does not imply any warranty for properties.
The safety instructions of the accompanying product documentation shall be observed.

SIEMENS

EU-Konformitätserklärung / *EU-Declaration of Conformity*

Nr./*No.* A5E32187773A-002

Die Übereinstimmung des bezeichneten Produkts mit den Vorschriften der angewandten Richtlinie 94/9/EG wird nachgewiesen durch die vollständige Einhaltung folgender Normen / Vorschriften:

The conformity of the designated product with the provisions of the applied Directive 94/9/EC is proved by full compliance with the following standards / regulations:

Harmonisierte Normen / *Harmonized standards*:

Referenznummer *Reference number*	Ausgabedatum *Date of issue*	Referenznummer *Reference number*	Ausgabedatum *Date of issue*
EN 60079-0	2012	EN 60079-7	2007
EN 60079-31	2009		

Siemens Aktiengesellschaft

Fürth — 19.05.2014

Ort / *place of issue* — Datum / *Date of issue*

i.V.

Name / *name* — Unterschrift / *signature*

Werner Streel

Head I IA CE SE CEN

Funktion / *function*

Ernst Pfitzinger

Name / *name* — Unterschrift / *signature*

Head I IA CE SE R&D

Funktion / *function*

Diese Erklärung bescheinigt die Übereinstimmung mit den genannten Richtlinien, ist jedoch keine Beschaffenheits- oder Haltbarkeitsgarantie. Die Sicherheitshinweise der mitgelieferten Produktdokumentation sind zu beachten.

This declaration certifies the compliance with the indicated directives but does not imply any warranty for properties. The safety instructions of the accompanying product documentation shall be observed.

Translation

(1) # EC-Type Examination Certificate

(2) **- Directive 94/9/EC -**
Equipment and protective systems intended for use in potentially explosive atmospheres

(3) **DMT 02 ATEX E 249 U**

(4) **Component:** **Mounting enclosure type 6DL2804-0A*00**

(5) **Manufacturer:** **Siemens AG**

(6) **Address:** **76187 Karlsruhe, Germany**

(7) The design and construction of this component and any acceptable variation thereto are specified in the appendix to this type examination certificate.

(8) The certification body of DEKRA EXAM GmbH, notified body no. 0158 in accordance with Article 9 of the Directive 94/9/EC of the European Parliament and the Council of 23 March 1994, certifies that this component has been found to comply with the Essential Health and Safety Requirements relating to the design and construction of equipment and protective systems intended for use in potentially explosive atmospheres, given in Annex II to the Directive. The examination and test results are recorded in the test and assessment report BVS PP 02.2144 EG.

(9) The Essential Health and Safety Requirements are assured by compliance with:

EN 50014:1997+A1-A2	General requirements
EN 50019:2000	Increased Safety
EN 50281-1-1:1998	Dust explosion protection

(10) If the sign "U" is placed after the certificate number, it indicates that this certificate is not to be taken for a certificate of an equipment or protective system. This certificate may only serve as the basis of a certificate for an equipment or protective system.

(11) This EC-Type Examination Certificate relates only to the design, examination and tests of the specified component in accordance to Directive 94/9/EC.
Further requirements of the Directive apply to the manufacturing process and supply of this equipment. These are not covered by this certificate.

(12) The marking of the component shall include the following:

II 2G EEx e II
II 2 D IP65

Deutsche Montan Technologie GmbH
Essen, 20th December 2002

Signed: Dr. Jockers	Signed: Dr. Eickhoff
DMT certification body	Head of special services unit

DEKRA EXAM GmbH Dinnendahlstrasse 9 44809 Bochum Phone +49.234.3696-105 Fax +49.234.3696-110 zs-exam@dekra.com

(13) Appendix to

(14) # EC-Type Examination Certificate

DMT 02 ATEX E 249 U

(15) 15.1 Subject and type

Mounting enclosure type 6DL2804-0A*00

A	dimensions: 400 x	600 x 230
B	dimensions: 400 x	800 x 230
C	dimensions: 400 x	1050 x 230

15.2 Description

The mounting enclosure type 6DL2804-0A*00 is made of stainless steel.
The cable glands and blanking elements used are separately certified.

15.3 Parameters

15.3.1	Limit values of service temperature	
15.3.1.1	of gasket K31-9020-11R	-20 °C to +75 °C
15.3.1.2	of cable gland type 8161, made by Stahl (PTB 00 ATEX 3119 X)	-20 °C to +75 °C
15.3.1.3	of the screw-type blanking element for unused threaded holes, type 8290/3, made by Stahl (PTB 00 ATEX 3133)	-20 °C to +80 °C
15.3.2	Degrees of ingress protection according to EN 60529	IP65

(16) Test and assessment report

BVS PP 02.2144 EG, as of 20.12.2002

(17) Special conditions for safe use

Not relevant

We confirm the correctness of the translation from the German original.
In the case of arbitration only the German wording shall be valid and binding.

DEKRA EXAM GmbH
44809 Bochum, 31.03.2014
BVS-Yil/Ar E 3594/14

Certification body

Special services unit

DEKRA EXAM GmbH Dinnendahlstrasse 9 44809 Bochum Phone +49.234.3696-105 Fax +49.234.3696-110 zs-exam@dekra.com

Translation
1st Supplement

(Supplement in accordance with Directive 94/9/EC Annex III number 6)

to the EC-Type Examination Certificate
DMT 02 ATEX E 249 U

Component: **Mounting enclosure type 6DL2804-0**00**

Manufacturer: **Siemens AG**

Address: **76187 Karlsruhe, Germany**

Subject and type

Mounting enclosure type 6DL2804-0**00

- A dimensions: 400 x 600 x 230
- B dimensions: 400 x 800 x 230
- C dimensions: 400 x 1050 x 230
- A Gas
- D Dust

Description

The mounting enclosure type 6DL2804-0**00 can also be manufactured in one of the following variants:

- coated with Percotex textured paint made by Spies Hecker with a surface resistance of $< 10^8 \Omega$
- with separately certified cable glands and blanking elements of at least IP 65 and suitable for an ambient temperature range of at least -20 °C to +75 °C
- with separately certified terminals of type of protection Increased Safety 'e' and suitable for an ambient temperature range of at least -20 °C to +75 °C
- with a mounting board to fix built-in devices later on.

The mounting enclosure type 6DL2804-0A*00 can also be equipped with a breather of type 8162 made by Stahl (PTB 01 ATEX 1018).

The Essential Health and Safety Requirements of the modified variant are assured by compliance with:

EN 50014:1997+A1-A2	General requirements
EN 50019:2000	Increased Safety
EN 50281-1-1:1998+A1	Dust explosion protection

DEKRA EXAM GmbH Dinnendahlstrasse 9 44809 Bochum Phone +49.234.3696-105 Fax +49.234.3696-110 zs-exam@dekra.com

Parameters

1	Limit values of service temperature	
1.1	of gasket K31-9020-11R	-20 °C to +75 °C
1.2	of cable gland	-20 °C to +75 °C
1.3	of the screw-type blanking element for unused threaded holes	-20 °C to +75 °C
1.4	breather type 8162, made by Stahl (PTB 00 ATEX 1018)	-20 °C to +70 °C
2	Degrees of ingress protection according to EN 60529 Type 6DL2804-0A*00	IP65
	when using breather type 8162, made by Stahl (PTB 00 ATEX 1018)	IP54

Marking

II 2G EEx e II for type 6DL2804-0A*00
II 2 D IP65 for type 6DL2804-0D*00

Test and assessment report

BVS PP 02.2144 EG, as of 09.09.2004

EXAM BBG Prüf- und Zertifizier GmbH
Bochum, 09th September 2004

Signed: Dr. Jockers
Certification body

Signed: Dr. Eickhoff
Special services unit

We confirm the correctness of the translation from the German original.
In the case of arbitration only the German wording shall be valid and binding.

DEKRA EXAM GmbH
44809 Bochum, 31.03.2014
BVS-Yil/Ar E 3594/14

Certification body

Special services unit

DEKRA EXAM GmbH Dinnendahlstrasse 9 44809 Bochum Phone +49.234.3696-105 Fax +49.234.3696-110 zs-exam@dekra.com

Translation
2nd Supplement

(Supplement in accordance with Directive 94/9/EC Annex III number 6)

to the EC-Type Examination Certificate
DMT 02 ATEX E 249 U

Component: **Mounting enclosure type 6DL2804-0***0**

Manufacturer: **Siemens AG**

Address: **76187 Karlsruhe, Germany**

Description

The mounting enclosure type 6DL2804-0***0 can also be manufactured according to the document stated in the second supplement of the test and assessment report.

Then, the full type coding means the following:

Mounting enclosure type 6DL2804-0***0

3	with three lines of cable glands
5	with five lines of cable glands
A	dimensions: 400 x 600 x 230
B	dimensions: 400 x 800 x 230
C	dimensions: 400 x 1050 x 230
D	dimensions: 400 x 650 x 230
E	dimensions: 400 x 950 x 230
A	Gas
D	Dust

The Essential Health and Safety Requirements of the modified variant are assured by compliance with:

EN 50014:1997+A1-A2	General requirements
EN 50019:2000	Increased Safety 'e'
EN 50281-1-1:1998+A1	Dust explosion protection

The marking of the component shall include the following:

II 2G EEx e II	for type 6DL2804-0A**0
II 2 D IP65	for type 6DL2804-0D**0

DEKRA EXAM GmbH Dinnendahlstrasse 9 44809 Bochum Phone +49.234.3696-105 Fax +49.234.3696-110 zs-exam@dekra.com

Test and assessment report

BVS PP 02.2144 EG, as of 17.06.2005

EXAM BBG Prüf- und Zertifizier GmbH
Bochum, 17th June 2005

Signed: Dr. Jockers	Signed: Dr. Eickhoff
Certification body	Special services unit

We confirm the correctness of the translation from the German original.
In the case of arbitration only the German wording shall be valid and binding.

DEKRA EXAM GmbH
44809 Bochum, 31.03.2014
BVS-Yil/Ar E 3594/14

Certification body	Special services unit

DEKRA EXAM GmbH Dinnendahlstrasse 9 44809 Bochum Phone +49.234.3696-105 Fax +49.234.3696-110 zs-exam@dekra.com

Translation
3rd Supplement

(Supplement in accordance with Directive 94/9/EC Annex III number 6)

to the EC-Type Examination Certificate
DMT 02 ATEX E 249 U

Component: **Mounting enclosure type 6DL2804-0******

Manufacturer: **Siemens AG**

Address: **76187 Karlsruhe, Germany**

Description

The mounting enclosure type 6DL2804-0**** can also be manufactured with a silicone foam profile gasket.

The mounting enclosure type 6DL2804-0**** is suitable for an ambient temperature range of -40 °C to +75 °C. Therefore it is equipped with separately certified cable glands and blanking elements of at least IP 65 and suitable for an ambient temperature range of at least -40 °C to +75 °C and also with separately certified terminals of type of protection Increased Safety 'e' and suitable for an ambient temperature range of at least -40 °C to +75 °C.

Then, the full type coding means the following:

Mounting enclosure type 6DL2804-0****

0	temperature range down to -20 °C
1	temperature range down to -40 °C
3	with three lines of cable glands
5	with five lines of cable glands
A	dimensions: 400 x 600 x 230
B	dimensions: 400 x 800 x 230
C	dimensions: 400 x 1050 x 230
D	dimensions: 400 x 650 x 230
E	dimensions: 400 x 950 x 230
A	Gas
D	Dust

Parameters

Limit values of service temperature

of gasket K31-9020-11R	-40 °C to +75 °C
of gasket K31-9299-27-VP2 with Fermapor K31-B4	-40 °C to +80 °C
of silicone gasket (black, 8x20 mm)	-50 °C to +140 °C

DEKRA EXAM GmbH Dinnendahlstrasse 9 44809 Bochum Phone +49.234.3696-105 Fax +49.234.3696-110 zs-exam@dekra.com

The Essential Health and Safety Requirements of the modified variant are assured by compliance with:

EN 50014:1997+A1-A2	General requirements
EN 50019:2000	Increased Safety 'e'
EN 50281-1-1:1998+A1	Dust explosion protection

The marking of the component shall include the following:

Ex II 2G EEx e II	for type 6DL2804-0A***
Ex II 2 D IP65	for type 6DL2804-0D***

Test and assessment report

BVS PP 02.2144 EG, as of 14.08.2006

EXAM BBG Prüf- und Zertifizier GmbH
Bochum, 14th August 2006

Signed: Dr. Jockers	Signed: Dr. Eickhoff
Certification body	Special services unit

We confirm the correctness of the translation from the German original.
In the case of arbitration only the German wording shall be valid and binding.

DEKRA EXAM GmbH
44809 Bochum, 31.03.2014
BVS-Yil/Ar E 3594/14

Certification body	Special services unit

DEKRA EXAM GmbH Dinnendahlstrasse 9 44809 Bochum Phone +49.234.3696-105 Fax +49.234.3696-110 zs-exam@dekra.com

Translation
4th Supplement

(Supplement in accordance with Directive 94/9/EC Annex III number 6)

to the EC-Type Examination Certificate
DMT 02 ATEX E 249 U

Component: **Mounting enclosure type 6DL2804-0******

Manufacturer: **Siemens AG**

Address: **76187 Karlsruhe, Germany**

Description

The mounting enclosure type 6DL2804-0**** complies with the requirements of the standards Normen EN 60079-0:2006 and EN 60079-7:2007, Increased Safety 'e', and also with the requirements of the standards EN 61241-0:2006 and EN 61241-1:2004, Protection by Enclosures 'tD'.
In addition, it complies with the requirements of equipment group I category M2.

Then, the full type coding means the following:

Mounting enclosure type 6DL2804-0****

0	temperature range down to -20 °C
1	temperature range down to -40 °C
2	temperature range down to -20 °C cable glands with blue cap
3	temperature range down to -20 °C Ex e cable glands (mining)
1	with one line of cable glands (mining)
2	with two lines of cable glands (mining)
3	with three lines of cable glands M16
4	with three lines of cable glands M20
5	with five lines of cable glands M16
6	with five lines of cable glands M20
D	dimensions: 400 x 650 x 230
E	dimensions: 400 x 950 x 230
F	dimensions: 400 x 650 x 350
G	dimensions: 400 x 950 x 350
A	Gas
D	Dust
M	Mining M2

The Essential Health and Safety Requirements of the modified variant are assured by compliance with:

EN 60079-0:2006	General requirements
EN 60079-7:2007	Increased Safety 'e'
EN 61241-0:2006	General requirements
EN 61241-1:2004	Protection by Enclosures

DEKRA EXAM GmbH Dinnendahlstrasse 9 44809 Bochum Phone +49.234.3696-105 Fax +49.234.3696-110 zs-exam@dekra.com
until 31.05.2003: Deutsche Montan Technologie GmbH Am Technologiepark 1 45307 Essen Germany

The marking of the component shall include the following:

Ex **II 2G Ex e II**	for type 6DL2804-0A***
Ex **I M2 Ex e I**	for type 6DL2804-0M***
Ex **II 2D Ex tD A21 IP65**	for type 6DL2804-0D***

Test and assessment report

BVS PP 02.2144 EG, as of 09.04.2009

DEKRA EXAM GmbH
Bochum, 9th April 2009

Signed: Dr. Jockers	Signed: Dr. Eickhoff
Certification body	Special services unit

We confirm the correctness of the translation from the German original.
In the case of arbitration only the German wording shall be valid and binding.

DEKRA EXAM GmbH
44809 Bochum, 31.03.2014
BVS-Yil/Ar E 3594/14

Certification body	Special services unit

DEKRA EXAM GmbH Dinnendahlstrasse 9 44809 Bochum Phone +49.234.3696-105 Fax +49.234.3696-110 zs-exam@dekra.com
until 31.05.2003: Deutsche Montan Technologie GmbH Am Technologiepark 1 45307 Essen Germany

Translation

(1) 5th Supplement to the EC-Type Examination Certificate

(2) Equipment and protective systems intended for use in potentially explosive atmospheres - Directive 94/9/EC

(3) No. of EC-Type Examination Certificate: **DMT 02 ATEX E 249 U**

(4) Component: **Mounting enclosure type 6DL2804-0******

(5) Manufacturer: **Siemens AG – Industry Sector**

(6) Address: **76187 Karlsruhe, Germany**

(7) The design and construction of this component and any acceptable variation thereto are specified in the appendix to this type examination certificate.

(8) The certification body of DEKRA EXAM GmbH, notified body no. 0158 in accordance with Article 9 of the Directive 94/9/EC of the European Parliament and the Council of 23 March 1994, certifies that this component has been found to comply with the Essential Health and Safety Requirements relating to the design and construction of equipment and protective systems intended for use in potentially explosive atmospheres, given in Annex II to the Directive. The examination and test results are recorded in the test and assessment report BVS PP 02.2144 EG.

(9) The Essential Health and Safety Requirements are assured by compliance with:

EN 60079-0:2006	**General requirements**
EN 60079-7:2007	**Increased Safety 'e'**
EN 61241-0:2006	**General requirements**
EN 61241-1:2004	**Protection by Enclosures**

(10) If the sign "U" is placed after the certificate number, it indicates that this certificate is not to be taken for a certificate of an equipment or protective system. This certificate may only serve as the basis of a certificate for an equipment or protective system.

(11) This EC-Type Examination Certificate relates only to the design, examination and tests of the specified component in accordance to Directive 94/9/EC.
Further requirements of the Directive apply to the manufacturing process and supply of this equipment. These are not covered by this certificate.

(12) The marking of the component shall include the following:

II 2G Ex e II	for type 6DL2804-0A***
I M2 Ex e I	for type 6DL2804-0M***
II 2D Ex tD A21 IP65	for type 6DL2804-0D***

DEKRA EXAM GmbH
Bochum, 04.05.2011

Signed: Simanski — Certification body

Signed: Schumann — Special services unit

DEKRA EXAM GmbH Dinnendahlstrasse 9 44809 Bochum Phone +49.234.3696-105 Fax +49.234.3696-110 zs-exam@dekra.com

(13) Appendix to

(14) **5th Supplement to the EC-Type Examination Certificate DMT 02 ATEX E 249 U**

(15) 15.1 Subject and type

Mounting enclosure type 6DL2804-0****

0	temperature range down to -20 °C
1	temperature range down to -40 °C
2	temperature range down to -20 °C cable glands with blue cap
3	temperature range down to -20 °C Ex e cable glands (mining)
1	with one line of cable glands (mining)
2	with two lines of cable glands (mining)
3	with three lines of cable glands M16
4	with three lines of cable glands M20
5	with five lines of cable glands M16
6	with five lines of cable glands M20
D	dimensions: 400 x 650 x 230
E	dimensions: 400 x 950 x 230
F	dimensions: 400 x 650 x 350
G	dimensions: 400 x 950 x 350
A	Gas
D	Dust
M	Mining M2

15.2 Description

Optionally, the mounting enclosure type 6DL2804-0**** can be equipped with component for drainage and pressure compensation that have been separately certified for those purposes. The components used for drainage and pressure compensation are selected with regard to the ambient temperature range, the degrees of ingress protection, and the type of protection applicable to the respective enclosure.

15.3 Parameters

15.3.1 Limit values of service temperature

of gasket K31-9020-11R	-40 °C to +75 °C
of gasket K31-9299-27-VP2 with Fermapor K31-B4	-40 °C to +80 °C
of silicone gasket (black, 8x20 mm)	-50 °C to +140 °C
of cable gland (depending on type)	-20 °C / -40 °C to +75 °C
of the screw-type blanking element for unused threaded holes	-20 °C to +75 °C
of breather type 8162, made by Stahl (PTB 00 ATEX 1018)	-20 °C to +70 °C

15.3.2 Degrees of ingress protection according to EN 60529 IP65
lower degrees of IP may be possible if components for drainage and pressure compensation are used

(16) Test and assessment report

BVS PP 02.2144 EG, as of 04.05.2011

DEKRA EXAM GmbH Dinnendahlstrasse 9 44809 Bochum Phone +49.234.3696-105 Fax +49.234.3696-110 zs-exam@dekra.com

(17) Special conditions for safe use

Not relevant

We confirm the correctness of the translation from the German original.
In the case of arbitration only the German wording shall be valid and binding.

DEKRA EXAM GmbH
44809 Bochum, 31.03.2014
BVS-Yil/Ar E 3594/14

Certification body

Special services unit

DEKRA EXAM GmbH Dinnendahlstrasse 9 44809 Bochum Phone +49.234.3696-105 Fax +49.234.3696-110 zs-exam@dekra.com

Translation

(1) 6th Supplement to the EC-Type Examination Certificate

(2) Equipment and protective systems intended for use in potentially explosive atmospheres - Directive 94/9/EC

(3) No. of EC-Type Examination Certificate: **DMT 02 ATEX E 249 U**

(4) Component: **Mounting enclosure type 6DL2804-0******

(5) Manufacturer: **Siemens AG – Industry Sector**

(6) Address: **Siemensallee 84, 76187 Karlsruhe, Germany**

(7) The design and construction of this component and any acceptable variation thereto are specified in the appendix to this type examination certificate.

(8) The certification body of DEKRA EXAM GmbH, notified body no. 0158 in accordance with Article 9 of the Directive 94/9/EC of the European Parliament and the Council of 23 March 1994, certifies that this component has been found to comply with the Essential Health and Safety Requirements relating to the design and construction of equipment and protective systems intended for use in potentially explosive atmospheres, given in Annex II to the Directive. The examination and test results are recorded in the test and assessment report BVS PP 02.2144 EG.

(9) The Essential Health and Safety Requirements are assured by compliance with:

EN 60079-0:2012	**General requirements**
EN 60079-7:2007	**Increased Safety 'e'**
EN 60079-31:2009	**Protection by Enclosures**

(10) If the sign "U" is placed after the certificate number, it indicates that this certificate is not to be taken for a certificate of an equipment or protective system. This certificate may only serve as the basis of a certificate for an equipment or protective system.

(11) This EC-Type Examination Certificate relates only to the design, examination and tests of the specified component in accordance to Directive 94/9/EC.
Further requirements of the Directive apply to the manufacturing process and supply of this equipment. These are not covered by this certificate.

(12) The marking of the component shall include the following:

II 2G Ex e IIC Gb
I M2 Ex e I Mb
II 2D Ex tb IIIC Db

DEKRA EXAM GmbH
Bochum, 24.02.2014

Signed: Simanski	Signed: Dr. Wittler
Certification body	Special services unit

DEKRA EXAM GmbH Dinnendahlstrasse 9 44809 Bochum Phone +49.234.3696-105 Fax +49.234.3696-110 zs-exam@dekra.com

(13) Appendix to

(14) **6th Supplement to the EC-Type Examination Certificate DMT 02 ATEX E 249 U**

(15) 15.1 Subject and type

Mounting enclosure type 6DL2804-0*[1] *[2] *[3] *[4] _*[5]

1) A = Gas
D = Dust
M = Mining M2

2) A to W = enclosure size (WxHxD, max. 1000x1200x350)

3) 0 to 9 cable glands (number and size)

4) 0 to 9 cable glands (material used)

5) Z *** optional details (*** = A01, A02, ...A99, B01 ... B99, C01 ... ...)

15.2 Description

The mounting enclosure type 6DL2804-0****(-Z***) is used as an empty enclosure into which several devices, components and facilities can be installed.

The mounting enclosure can be manufactured in different sizes and in two types of protection, either Increased Safety 'e' (EPL Gb or EPL Mb) or Protection by Enclosures 'tb' (EPL Db).

The surface can be coated with e.g. paint or powder-coating of a surface resistance of $<10^9\ \Omega$.

It is alsopossible to mount separately certified cable glands, blanking and closing elements, airing and draining elements as well as components for command, operation and display such as push puttons, switches or indicator lights.

Furthermore it is possible to install separately certified terminals inside the mounting enclosure.

The reason for issuing this supplement is the fact that the applicable standards have been updated to EN 60079-0:2012 and EN 60079-31:2009; in addition, the enclosure has been modified with regard to the hinge fastening and the additionally possible provision of pneumatic connection components including the pertinent blanking elements.

Moreover, the lid of the mounting enclosure can either be manufactured with door hinges (to swing the door open) and double-bit keys or with a removable lid (only with double-bit keys).

The double-bit key is the built-in standard; optionally, T-shaped locking devices with and without cylinders can be used.

DEKRA EXAM GmbH Dinnendahlstrasse 9 44809 Bochum Phone +49.234.3696-105 Fax +49.234.3696-110 zs-exam@dekra.com

15.3 Parameters

Limit values of service temperature	-40 °C to +75 °C

The permitted service temperature can be lower due to the different electrical components installed.

Rated voltage	max. 1000 V
Rated current	max. 100 A
Degrees of ingress protection	IP66 (EPL Gb / EPL Db with swing door) IP55 (EPL Mb with swing door) IP55 (EPL Gb with pneumatic connection) IP56 (EPL Gb with removable lid) IP56 (EPL Gb with T-shaped handles and cylinders)

The IP degrees according to EN 60529 can be lower due to the mounting or attachment of the components mentioned above; however, for a use at EPL Gb it needs to be at least IP 54, and for a use at EPL Db at least IP6x.

(16) Test and assessment report

BVS PP 02.2144 EG, as of 24.02.2014

(17) Special conditions for safe use

When used in areas of EPL Gb / Mb, and where separately certified terminals are used, the creepage and clearance distances have to meet the requirements of EN 60079-7.

The IP degrees according to EN 60529 can be lower due to the mounting or attachment of separately certified components; however, for a use at EPL Gb it needs to be at least IP 54, and for a use at EPL Db at least IP6x.

We confirm the correctness of the translation from the German original.
In the case of arbitration only the German wording shall be valid and binding.

DEKRA EXAM GmbH
44809 Bochum, 31.03.2014
BVS-Yil/Ar E 3594/14

Certification body

Special services unit

DEKRA EXAM GmbH Dinnendahlstrasse 9 44809 Bochum Phone +49.234.3696-105 Fax +49.234.3696-110 zs-exam@dekra.com