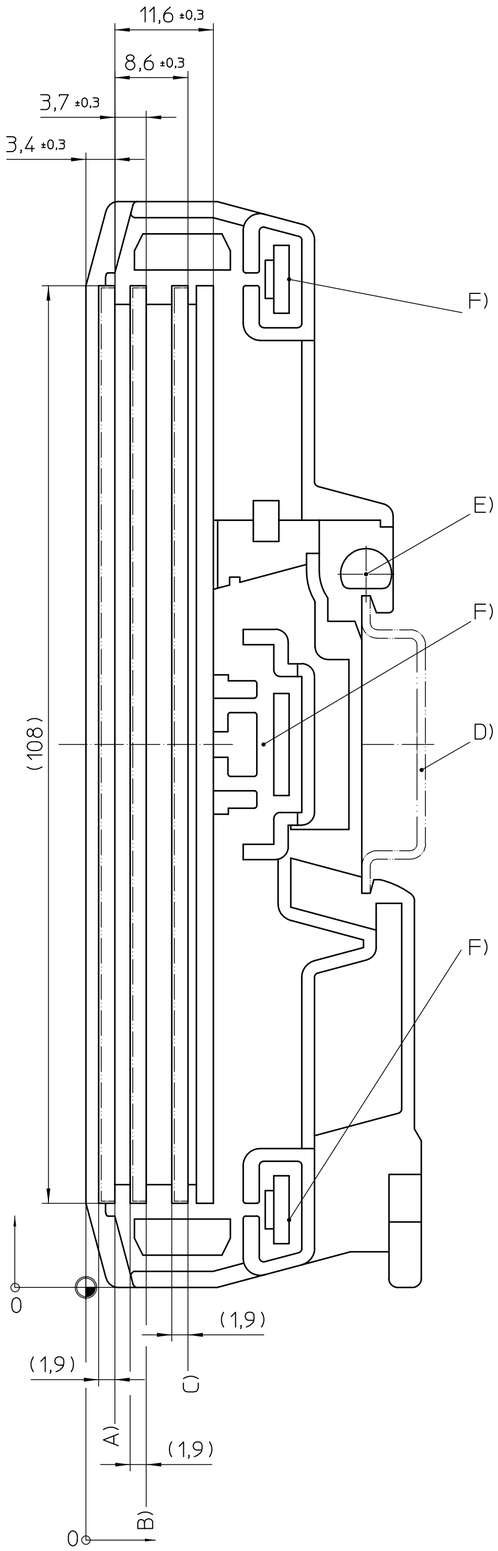

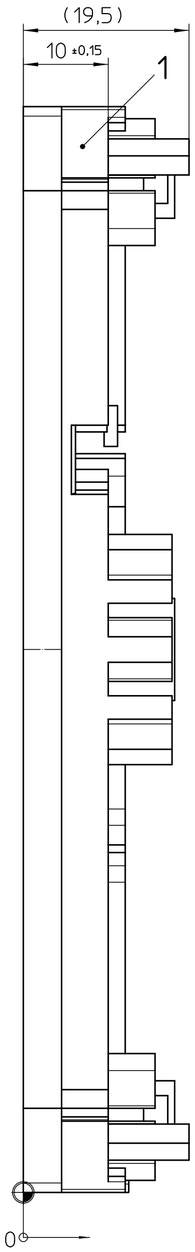

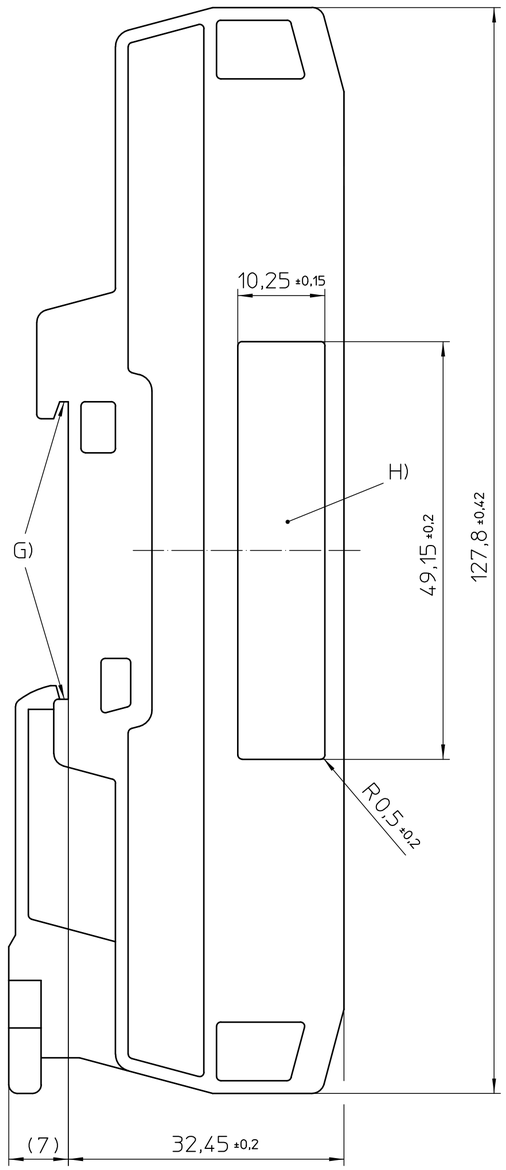

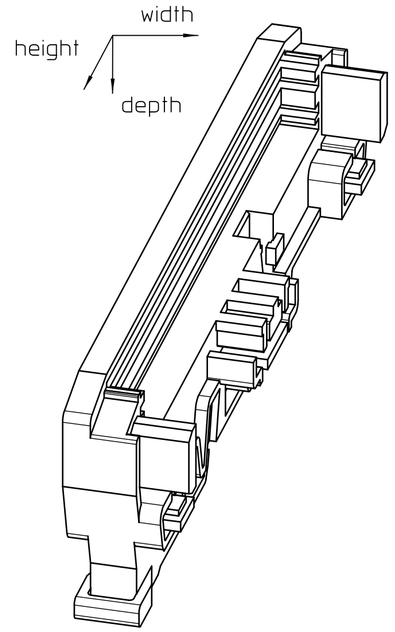

General Information:
- Simplified representation
- Document excluded from change process
- Linear dimensions [mm]
- Tolerances apply in a normal climate according to DIN EN ISO 291-23/50-2, PA plastic parts with about 2% (% by weight) moisture content.
- ⊕ Workpiece zero point for mechanical processing
- Tolerances for mechanical processing are ISO 2768-mK
- Machining radii min. R1, further on request
- Web: www.phoenixcontact.com webcode: #0313 / #0314

Additional Information:
A) PCB L1
B) PCB L2
C) PCB L3
D) Mounting rail according to DIN EN 60715: TH 35-7,5 or Mounting rail similar to DIN EN 60715: TH 35-15x1,5
E) Fix point for UM-PRO PE CONTACT
F) Fix point for UM-PRO 108 PROFILE
G) Fix point for UM-PRO MOUNT
H) Marking area

- Recommended PCB-outline see further documentation

Pos.	QTY	description	material
1	1	LATERAL ELEMENT LEFT	PA

DIN A2	document-No. / RI 01033962 / 03	date 05.12.2019	scale 2:1
PHOENIX CONTACT	ident.-No. 2202021	document-type TECDOC 2D_Productdrawing	
page 1 of 1	description UM-BASIC/PRO 108 COVER-L KMGY		

Transfer or duplication of this document as well as the utilisation or communication of its content are not permitted unless express consent is granted. Violations give rise to claims for damages. All rights reserved in case of patent, utility model or design patent registrations.

Weitergabe sowie Vervielfältigung dieses Dokuments, Verwertung und Mitteilung seines Inhalts sind verboten, soweit nicht ausdrücklich gestattet. Zuwiderhandlungen verpflichten zu Schadensersatz. Alle Rechte für den Fall der Patent-, Gebrauchsmuster- oder Designeintragung vorbehalten.