D-SUB bus connector - SUBCON-PLUS-CAN/90X/PG/M12 - 2902730

Please be informed that the data shown in this PDF Document is generated from our Online Catalog. Please find the complete data in the user's documentation. Our General Terms of Use for Downloads are valid
(http://phoenixcontact.com/download)

The figure shows version

D-SUB plug, 9-pos., socket, with PG-D-SUB pin, assignment: 2, 3, 5, 6, 7; 9; two M12 cable glands (A-coded) under 90°. Bus system: CAN, CANopen®. Termination resistor via separate M12 terminator. Long version; S7-compatible.

Product Description

The SUBCON-PLUS fast connectors with M12 connection ensure error-free installation of bus systems, thanks to the use of fully-tested components such as cables and connectors.
The innovative housing concept is lightweight yet offers optimum mechanical protection against environmental influences. This means that the fast connection plugs are ideal, even in applications subject to vibration.
The unique SPEEDCON fast locking system on the M12 connections offers reliable connection with just half a turn.

Your advantages

- ☑ Easy startup, plug and play
- ☑ Error-free installation, particularly in standard machine production
- ☑ Quick connection thanks to M12-SPEEDCON fast locking system
- ☑ Low weight
- ☑ CANopen®
- ☑ Termination using M12 termination resistor
- ☑ Version with programming connection
- ☑ Adapter between IP20 and IP67 environments
- ☑ Through-contacted shielding from M12 to D-SUB

Key Commercial Data

Packing unit	1
GTIN	4 046356 672542
GTIN	4046356672542
Custom tariff number	85366990

D-SUB bus connector - SUBCON-PLUS-CAN/90X/PG/M12 - 2902730

Technical data

Dimensions

Width	16 mm
Height	41 mm
Length	93 mm

Ambient conditions

Ambient temperature (operation)	-30 °C ... 80 °C
Ambient temperature (storage/transport)	-40 °C ... 85 °C
Ambient temperature (assembly)	-20 °C ... 80 °C
Permissible humidity (operation)	10 % ... 75 % (At +25°C, non-condensing)
Altitude	≤ 5000 m (For restrictions, see the manufacturer's declaration for altitude operation)
Degree of protection	IP40

General

Nominal voltage U_N	5 V
Nominal current I_N	100 mA
Bus system	CAN, CANopen, SafetyBus-P
Signal	CAN
	CANopen®
SUBCON fixing screws	4-40 UNC
Tightening torque	0.4 Nm
Housing material	Polyamide
Pin assignment	2, 3, 5, 7, 9
MTTF	6706 Years (SN 29500 standard, temperature 25°C, operating cycle 21%)
	1817 Years (SN 29500 standard, temperature 40°C, operating cycle 34.25%)
	155 Years (SN 29500 standard, temperature 40°C, operating cycle 100%)

Connection data

Connection	D-SUB connection
Number of positions	9
Connection method	D-SUB socket
Termination resistor	separately via M12 termination resistor
Connection	Programming connection
Number of positions	9
Connection method	D-SUB connector
Connection	M12 plug
Number of positions	5
Connection method	M12 connector, A-coded

D-SUB bus connector - SUBCON-PLUS-CAN/90X/PG/M12 - 2902730

Technical data

Connection data

Torque	0.4 Nm
Connection	M12 socket
Number of positions	5
Connection method	M12 connector, A-coded
Torque	0.4 Nm

Conformance/approvals

Designation	Corrosive gas test
Identification	ISA-S71.04-1985 G3 Harsh Group A

Environmental Product Compliance

REACh SVHC	Lead 7439-92-1
China RoHS	Environmentally Friendly Use Period = 50 years
	For details about hazardous substances go to tab “Downloads”, Category “Manufacturer's declaration”

Drawings

D-SUB bus connector - SUBCON-PLUS-CAN/90X/PG/M12 - 2902730

Schematic diagram

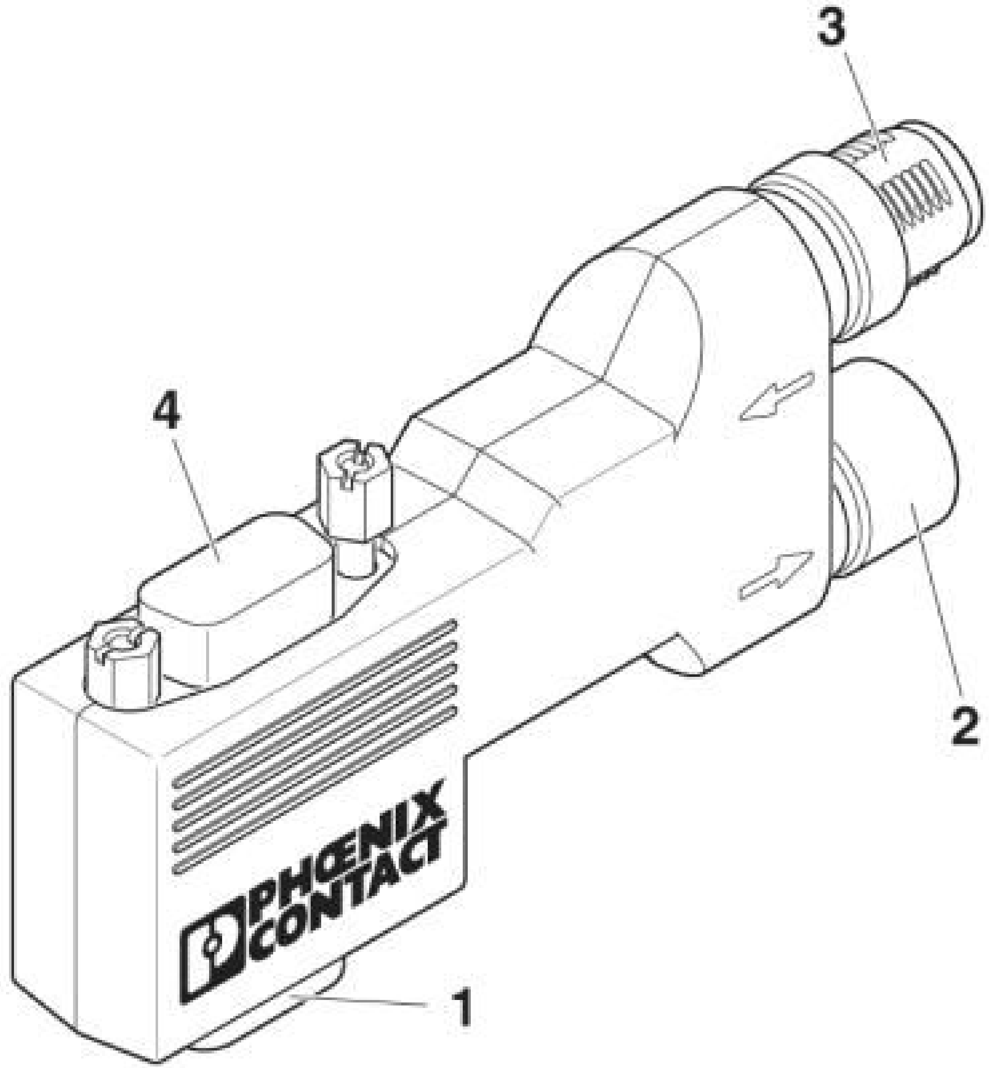

Function elements
1 = D-SUB 9
2 = Outgoing M12 connection
3 = Incoming M12 connection
4 = D-SUB PG connection (depending on the version)

D-SUB bus connector - SUBCON-PLUS-CAN/90X/PG/M12 - 2902730

Application drawing

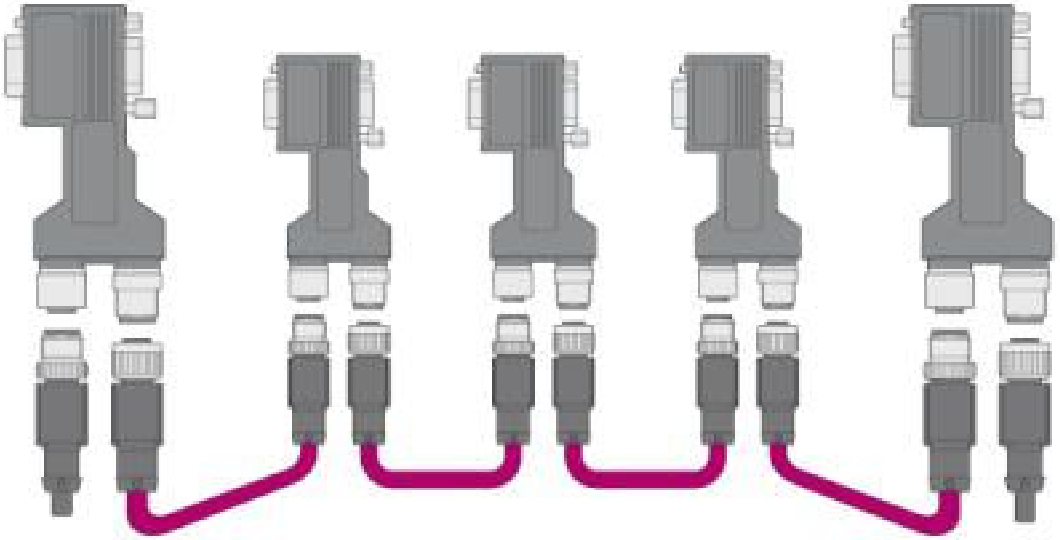

Bus/Line structure

Block diagram

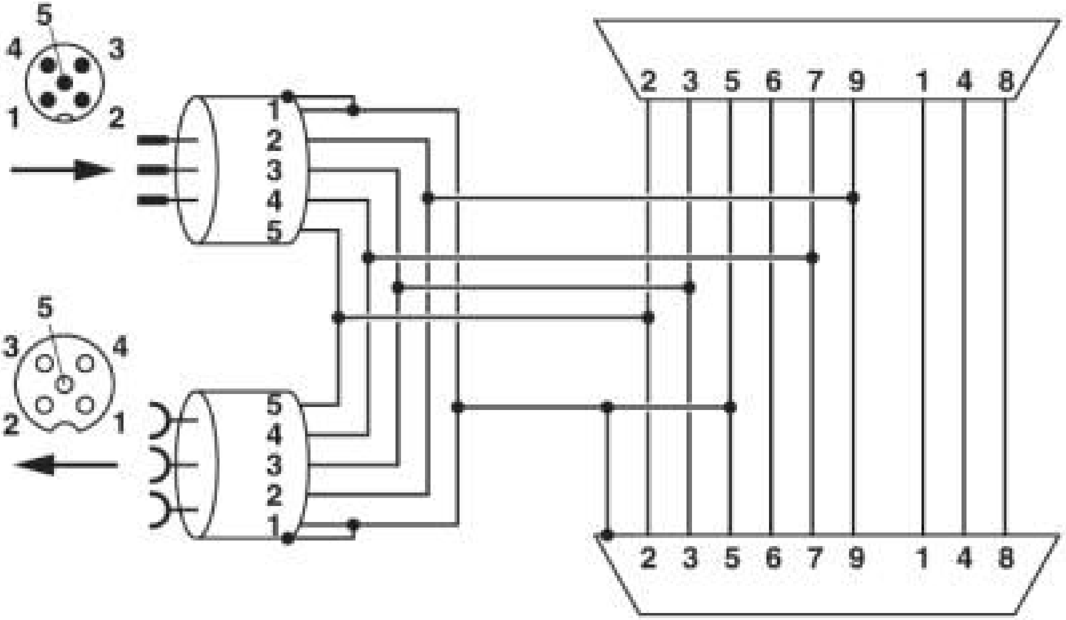
5
4
3
1
2
1
2
3
4
5
5
3
4
2
1
5
4
3
2
1
2 3 5 6 7 9 1 4 8
2 3 5 6 7 9 1 4 8

SUBCON-PLUS-CAN/...M12 function block diagram

D-SUB bus connector - SUBCON-PLUS-CAN/90X/PG/M12 - 2902730

Dimensional drawing

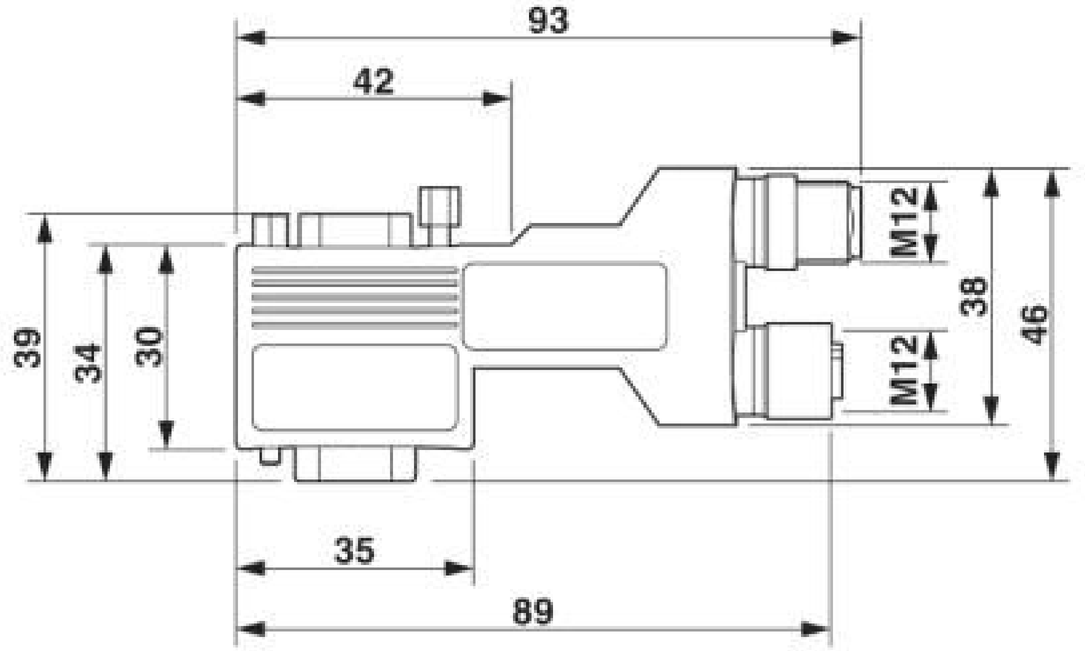

SUBCON-PLUS...90X...M12 dimensional drawing, long 90° version

Classifications

eCl@ss

eCl@ss 10.0.1	27440302
eCl@ss 4.0	27140800
eCl@ss 4.1	27140800
eCl@ss 5.0	27143400
eCl@ss 5.1	27143400
eCl@ss 6.0	27143400
eCl@ss 7.0	27440302
eCl@ss 8.0	27440302
eCl@ss 9.0	27440302

ETIM

ETIM 3.0	EC001132
ETIM 4.0	EC001132
ETIM 5.0	EC001132
ETIM 6.0	EC001132
ETIM 7.0	EC001132

D-SUB bus connector - SUBCON-PLUS-CAN/90X/PG/M12 - 2902730

Classifications

UNSPSC

UNSPSC 6.01	30211802
UNSPSC 7.0901	39121402
UNSPSC 11	39121402
UNSPSC 12.01	39121402
UNSPSC 13.2	39121522
UNSPSC 18.0	39121522
UNSPSC 19.0	39121522
UNSPSC 20.0	39121522
UNSPSC 21.0	39121522

Approvals

Approvals

Approvals

UL Recognized / cUL Recognized / cULus Recognized

Ex Approvals

Approval details

UL Recognized	http://database.ul.com/cgi-bin/XYV/template/LISEXT/1FRAME/index.htm	FILE E 238705
cUL Recognized	http://database.ul.com/cgi-bin/XYV/template/LISEXT/1FRAME/index.htm	FILE E 238705
cULus Recognized		

Accessories

Accessories

Data cable preassembled

D-SUB bus connector - SUBCON-PLUS-CAN/90X/PG/M12 - 2902730

Accessories

Bus system cable - SAC-5P-MS/ 0,3-920/FS SCO - 1518258

Bus system cable, CANopen®, DeviceNet™, 5-position, PUR halogen-free, violet RAL 4001, shielded, Plug straight M12 SPEEDCON, coding: A, on Socket straight M12 SPEEDCON, coding: A, cable length: 0.3 m

Bus system cable - SAC-5P-MS/ 1,0-920/FS SCO - 1518274

Bus system cable, CANopen®, DeviceNet™, 5-position, PUR halogen-free, violet RAL 4001, shielded, Plug straight M12 SPEEDCON, coding: A, on Socket straight M12 SPEEDCON, coding: A, cable length: 1 m

Bus system cable - SAC-5P-MS/ 5,0-920/FS SCO - 1518290

Bus system cable, CANopen®, DeviceNet™, 5-position, PUR halogen-free, violet RAL 4001, shielded, Plug straight M12 SPEEDCON, coding: A, on Socket straight M12 SPEEDCON, coding: A, cable length: 5 m

Bus system cable - SAC-5P-MS-FS SCO/920/... - 1538157

Bus system cable, CANopen®, DeviceNet™, 5-position, PUR halogen-free, violet RAL 4001, shielded, Plug straight M12 SPEEDCON, coding: A, on Socket straight M12 SPEEDCON, coding: A, cable length: Free input (0.2 ... 40.0 m)

Bus system cable - SAC-5P-MS/ 2,0-920 SCO - 1518177

Bus system cable, CANopen®, DeviceNet™, 5-position, PUR halogen-free, violet RAL 4001, shielded, Plug straight M12 SPEEDCON, coding: A, on free cable end, cable length: 2 m

D-SUB bus connector - SUBCON-PLUS-CAN/90X/PG/M12 - 2902730

Accessories

Bus system cable - SAC-5P-MS-FR SCO/920/... - 1433304

Bus system cable, CANopen®, DeviceNet™, 5-position, PUR halogen-free, violet RAL 4001, shielded, Plug straight M12 SPEEDCON, coding: A, on Socket angled M12 SPEEDCON, coding: A, cable length: Free input (0.2 ... 40.0 m)

Data plug

D-SUB bus connector - SUBCON-PLUS-CAN/90X/M12 - 2902731

D-SUB plug, 9-pos., socket, assignment: 2, 3, 5, 6, 7, 9; two M12 cable glands (A-coded) under 90°. Bus system: CAN, CANopen®. Termination resistor via separate M12 terminator. Long version; S7-compatible.

Terminal resistor

Termination resistor - SAC-5P-M12MS CAN TR - 1507816

Terminating resistor CANopen®/DeviceNet™ M12

Termination resistor - SAC-5P-M12FS CAN TR - 1529344

Terminating resistor CANopen®/DeviceNet™ M12

Phoenix Contact 2020 © - all rights reserved
http://www.phoenixcontact.com