PCB terminal block - PLH 16/ 2-15 - 1770539

Please be informed that the data shown in this PDF Document is generated from our Online Catalog. Please find the complete data in the user's documentation. Our General Terms of Use for Downloads are valid
(http://phoenixcontact.com/download)

The figure shows a 5-pos. version of the product

PCB terminal block, nominal current: 76 A, rated voltage (III/2): 1000 V, nominal cross section: 16 mm², pitch: 15 mm, number of positions: 2, connection method: Push-lock spring connection, mounting: Wave soldering, conductor/PCB connection direction: 0 °, color: green, Pin layout: Linear double pinning, Solder pin [P]: 4.5 mm

Your advantages

- Tool-free lever principle enables time-saving connection and release of conductors with/without ferrules
- Defined contact force ensures that contact remains stable over the long term
- Time-saving push-in connection when lever is closed
- Quick and convenient testing using integrated test option

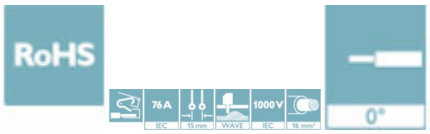

Key Commercial Data

Packing unit	1 pc
Minimum order quantity	25 pc
GTIN	4 046356 457736
GTIN	4046356457736
Weight per Piece (excluding packing)	24.000 g
Custom tariff number	85369010
Country of origin	Slovakia

Technical data

Item properties

Brief article description	PCB terminal block
Range of articles	PLH 16/
Pitch	15 mm
Number of positions	2

PCB terminal block - PLH 16/ 2-15 - 1770539

Technical data

Item properties

Connection method	Push-lock spring connection
Mounting type	Wave soldering
Pin layout	Linear double pinning
Number of levels	1
Number of connections	2
Number of potentials	2

Electrical parameters

Nominal current	76 A
Nom. voltage	1000 V
Rated voltage	1000 V
Rated voltage (III/2)	1000 V
Rated voltage (II/2)	1000 V
Rated surge voltage (III/3)	8 kV
Rated surge voltage (III/2)	8 kV
Rated surge voltage (II/2)	8 kV

Connection capacity

Connection method	Push-lock spring connection
Conductor cross section solid	0.75 mm² ... 16 mm²
Conductor cross section flexible	0.75 mm² ... 25 mm²
Conductor cross section AWG / kcmil	18 ... 4
Conductor cross section flexible, with ferrule without plastic sleeve	0.75 mm² ... 16 mm²
Conductor cross section, flexible, with ferrule, with plastic sleeve	0.75 mm² ... 10 mm²
2 conductors with the same cross section, flexible, with TWIN ferrule with plastic sleeve	0.75 mm² ... 4 mm²
Stripping length	18 mm

Material data - contact

Note	WEEE/RoHS-compliant, free of whiskers according to IEC 60068-2-82/ JEDEC JESD 201
Contact material	Cu alloy
Surface characteristics	Tin-plated
Metal surface terminal point (top layer)	Tin (10 - 16 µm Sn)
Metal surface soldering area (top layer)	Tin (10 - 16 µm Sn)

Material data - housing

Housing color	green (6021)
Insulating material	PA
Insulating material group	I

PCB terminal block - PLH 16/ 2-15 - 1770539

Technical data

Material data - housing

CTI according to IEC 60112	600
Flammability rating according to UL 94	V0
Glow wire flammability index GWFI according to EN 60695-2-12	850
Glow wire ignition temperature GWIT according to EN 60695-2-13	775
Temperature for the ball pressure test according to EN 60695-10-2	125 °C

Dimensions for the product

Length [l]	30.5 mm
Width [w]	26.4 mm
Height [h]	29 mm
Pitch	15 mm
Height (without solder pin)	33.5 mm
Solder pin [P]	4.5 mm
Pin spacing	12.5 mm
Pin dimensions	1.2 x 1.2 mm

Dimensions for PCB design

Hole diameter	1.6 mm
Pin spacing	12.5 mm

Packaging information

Type of packaging	packed in cardboard
Pieces per package	25
Denomination packing units	Pcs.

Ambient conditions

Ambient temperature (storage/transport)	-40 °C ... 70 °C
Ambient temperature (assembly)	-5 °C ... 100 °C
Ambient temperature (operation)	-40 °C ... 100 °C (Depending on the current carrying capacity/derating curve)

Termination and connection method

Test – repeated connection and release	IEC 60999-1:1999-11
	Test passed
Test for conductor damage and slackening	IEC 60999-1:1999-11
	Test passed

Pull-out test

Pull-out test	IEC 60999-1:1999-11
	Test passed
Conductor cross section / conductor type / tensile force	0.75 mm² / solid / > 30 N

PCB terminal block - PLH 16/ 2-15 - 1770539

Technical data

Pull-out test

	0.75 mm² / flexible / > 30 N
	16 mm² / stranded / > 100 N
	16 mm² / flexible / > 100 N
	10 mm² / flexible with ferrule / > 90 N

Mechanical tests according to standard

Test specification	IEC 60947-7-4

Electrical tests

Rated current	76 A
Conductor cross section	25 mm²
Rated voltage (III/2)	1000 V
Rated surge voltage (III/2)	8 kV

Air clearances and creepage distances

Clearances and creepage distances	IEC 60664-1:2007-04
Specification	IEC 60664-1:2007-04
Minimum clearance - inhomogeneous field (III/3)	8 mm
Minimum clearance - inhomogeneous field (III/2)	8 mm
Minimum clearance - inhomogeneous field (II/2)	5.5 mm
Minimum creepage distance value (III/3)	12.5 mm
Minimum creepage distance value (III/2)	8 mm
Minimum creepage distance value (II/2)	5.5 mm

Temperature-rise test

Result	Test passed
Specification	IEC 60947-7-4:2013-08

Current carrying capacity / derating curves

Specification	IEC 60947-7-4

Vibration test

Specification	IEC 60068-2-6:2007-12
Result	Test passed
Frequency	10 - 150 - 10 Hz
Sweep speed	1 octave/min
Amplitude	0.35 mm (10 - 60.1 Hz)
Test duration per axis	2.5 h

Standards and Regulations

Connection in acc. with standard	UL

PCB terminal block - PLH 16/ 2-15 - 1770539

Technical data

Standards and Regulations

Flammability rating according to UL 94	V0

Environmental Product Compliance

China RoHS	Environmentally friendly use period: unlimited = EFUP-e
	No hazardous substances above threshold values

Drawings

Functional drawing

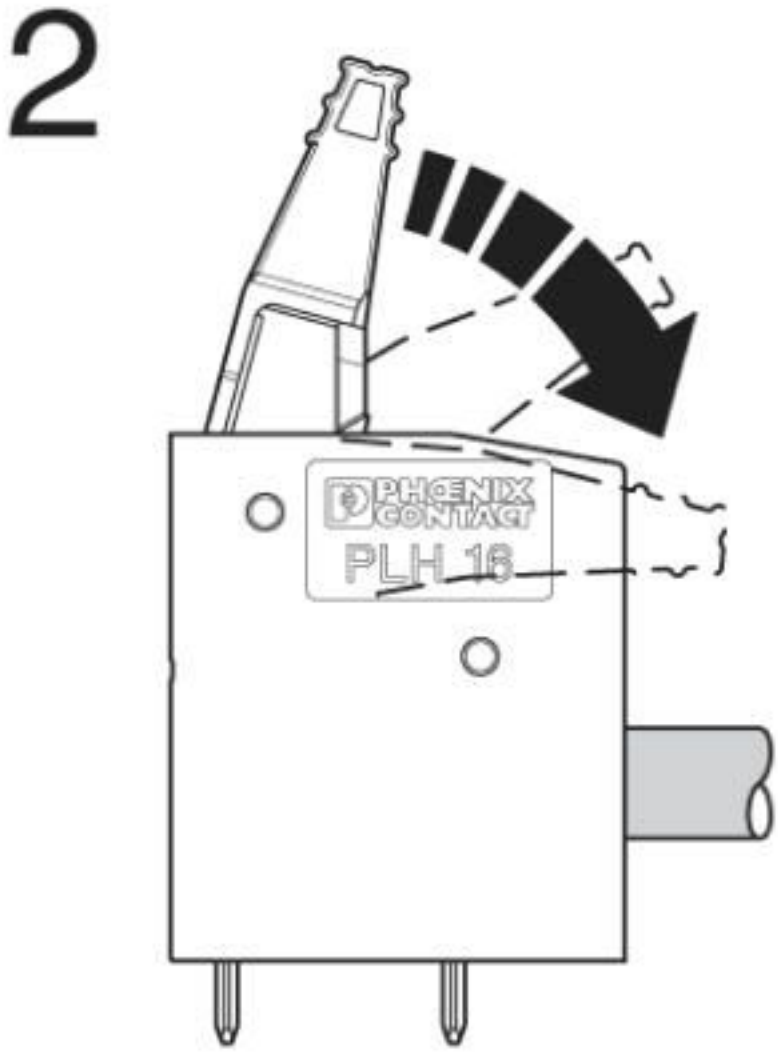

PCB terminal block - PLH 16/ 2-15 - 1770539

Drilling diagram

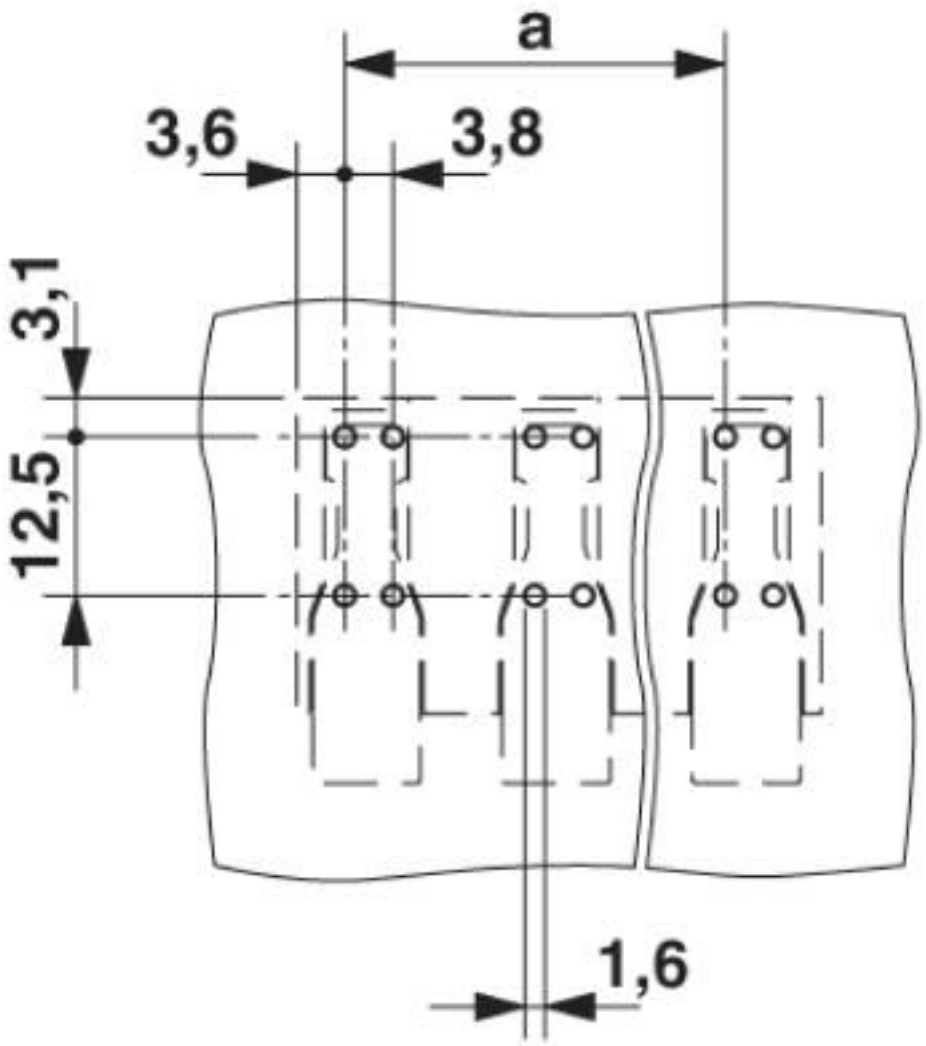

PCB terminal block - PLH 16/ 2-15 - 1770539

Functional drawing

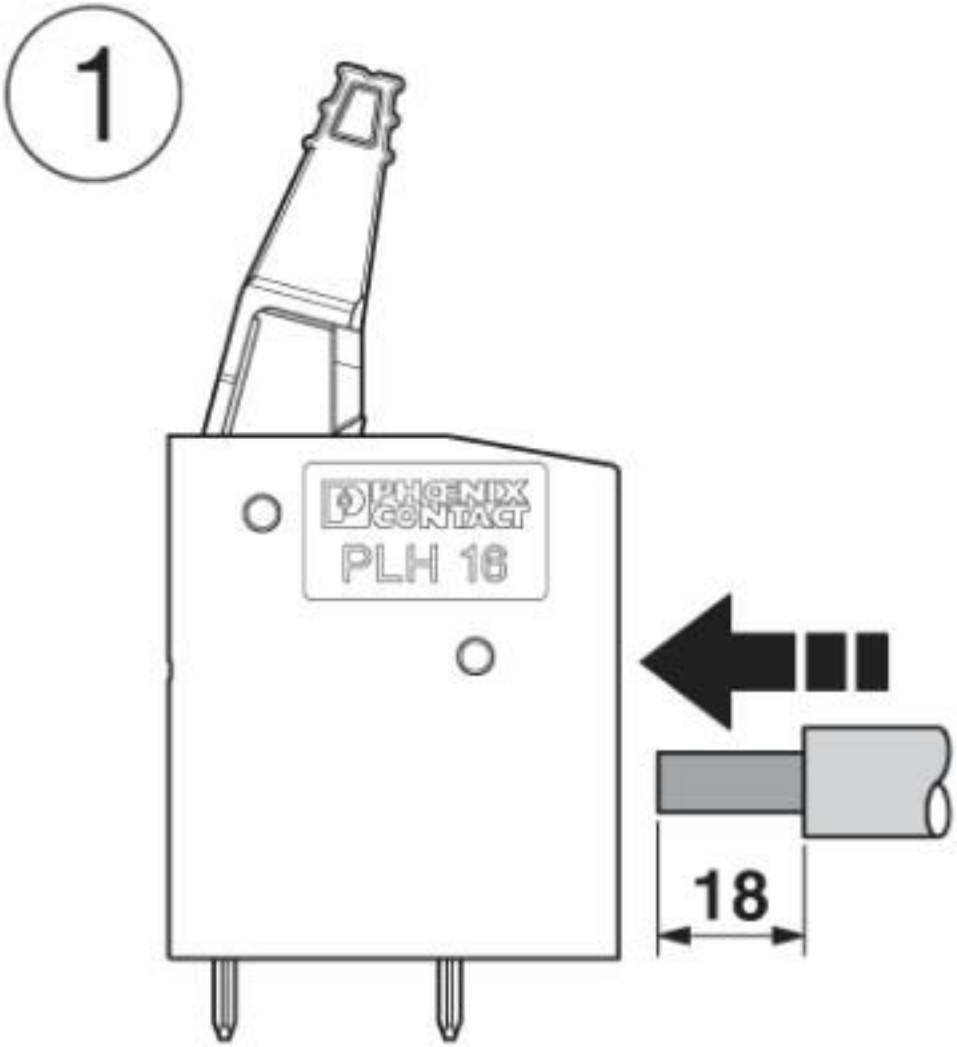

PCB terminal block - PLH 16/ 2-15 - 1770539

Diagram

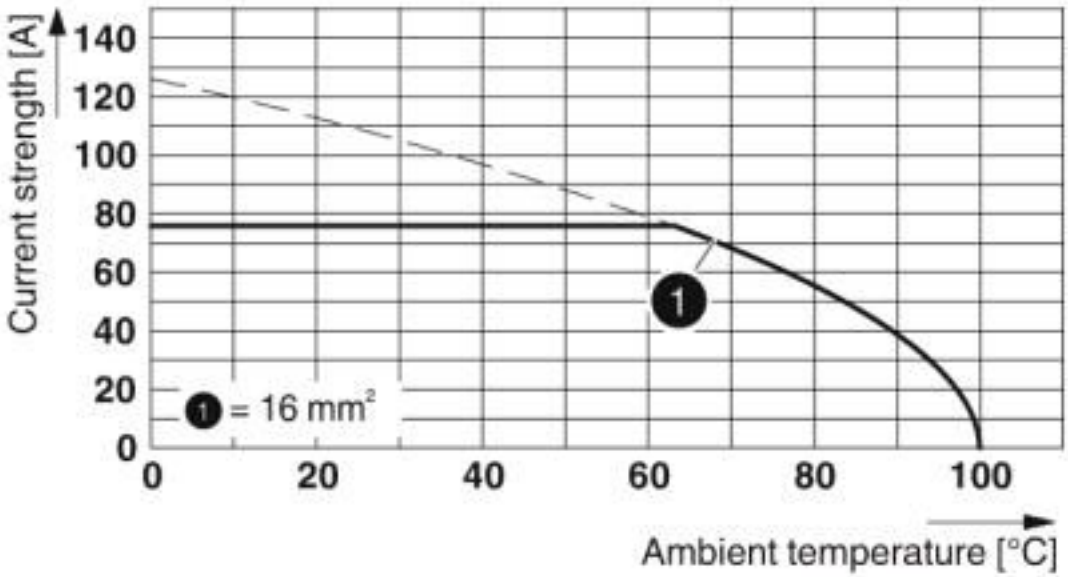

Type: PLH 16/...-15
Tested in accordance with DIN EN 60512-5-2:2003-01
No. of positions: 5
Conductor cross section: 16 mm² (exclusively for solid conductors)

PCB terminal block - PLH 16/ 2-15 - 1770539

Functional drawing

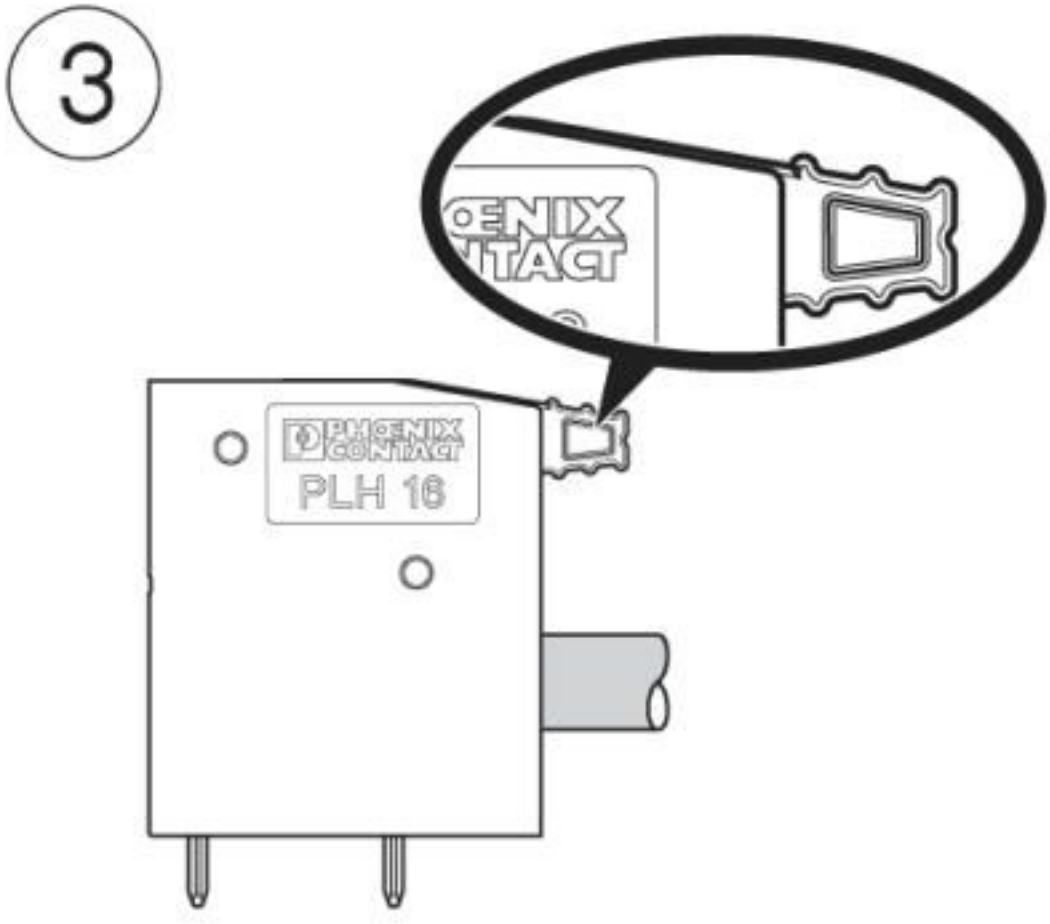

PCB terminal block - PLH 16/ 2-15 - 1770539

Functional drawing

PCB terminal block - PLH 16/ 2-15 - 1770539

Dimensional drawing

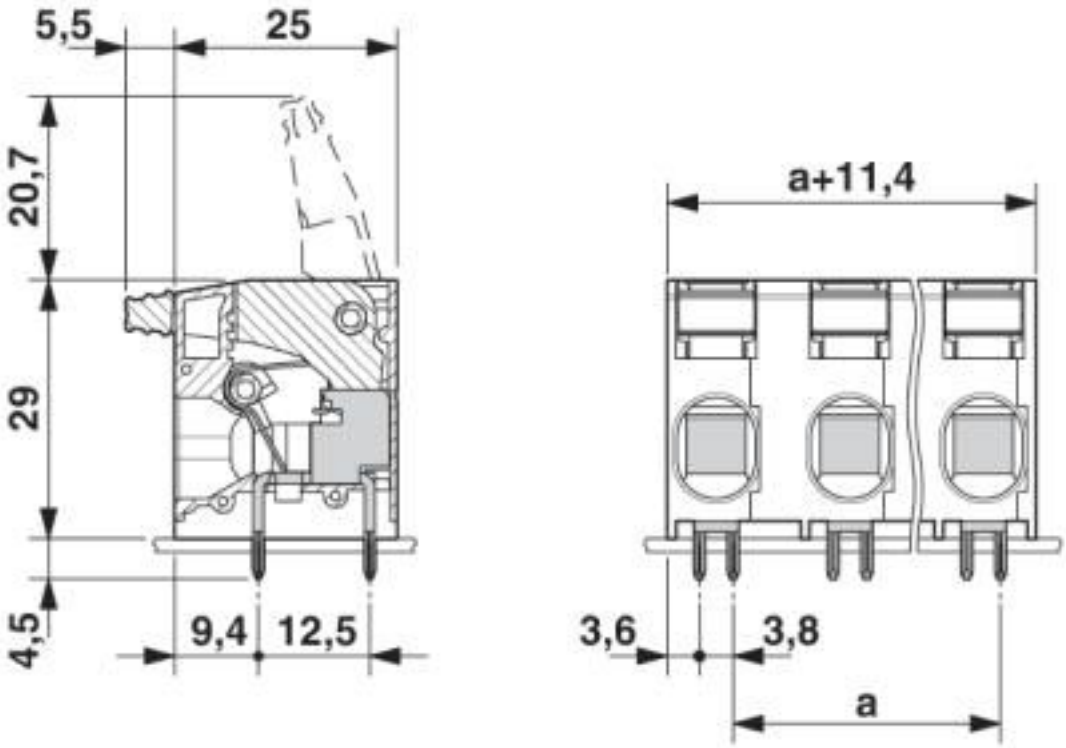

Classifications

eCl@ss

eCl@ss 10.0.1	27440401
eCl@ss 4.0	27141100
eCl@ss 4.1	27141100
eCl@ss 5.0	27141100
eCl@ss 5.1	27261100
eCl@ss 6.0	27261100
eCl@ss 7.0	27440401
eCl@ss 8.0	27440401
eCl@ss 9.0	27440401

ETIM

ETIM 3.0	EC001121
ETIM 4.0	EC002643
ETIM 5.0	EC002643
ETIM 6.0	EC002643

PCB terminal block - PLH 16/ 2-15 - 1770539

Classifications

ETIM

ETIM 7.0	EC002643

UNSPSC

UNSPSC 6.01	30211801
UNSPSC 7.0901	39121432
UNSPSC 11	39121432
UNSPSC 12.01	39121432
UNSPSC 13.2	39121432
UNSPSC 18.0	39121432
UNSPSC 19.0	39121432
UNSPSC 20.0	39121432
UNSPSC 21.0	39121432

Approvals

Approvals

Approvals

UL Recognized / IECEE CB Scheme / VDE Zeichengenehmigung / EAC

Ex Approvals

Approval details

UL Recognized		http://database.ul.com/cgi-bin/XYV/template/LISEXT/1FRAME/index.htm	E60425-20110524

	B	C
Nominal voltage UN	600 V	600 V
Nominal current IN	66 A	66 A
mm²/AWG/kcmil	18-4	18-4

IECEE CB Scheme		http://www.iecee.org/	DE1-58718

Nominal voltage UN	1000 V

PCB terminal block - PLH 16/ 2-15 - 1770539

Approvals

Nominal current IN	76 A
mm²/AWG/kcmil	0.75-16

VDE Zeichengenehmigung		http://www2.vde.com/de/Institut/Online-Service/VDE-gepruefteProdukte/Seiten/Online-Suche.aspx	40041250

Nominal voltage UN	1000 V
Nominal current IN	76 A
mm²/AWG/kcmil	0.75-16

EAC		B.01687

Accessories

Accessories

Crimping tool

Crimping pliers - CRIMPFOX 6 - 1212034

Crimping pliers, for ferrules without insulating collar according to DIN 46228 Part 1 and ferrules with insulating collar according to DIN 46228 Part 4, 0.25 mm² ... 6.0 mm², lateral entry, trapezoidal crimp

Crimping pliers - CRIMPFOX 16 S - 1207983

Crimping pliers for ferrules up to 16 mm²

Terminal marking

PCB terminal block - PLH 16/ 2-15 - 1770539

Accessories

Marker card - SK U/3,8 WH:UNBEDRUCKT - 0803906

Marker card, Sheet, white, unlabeled, can be labeled with: PLOTMARK, CMS-P1-PLOTTER, Office printing systems, mounting type: adhesive, for terminal block width: 210 mm, lettering field size: 186 x 3.8 mm, Number of individual labels: 1440

Phoenix Contact 2020 © - all rights reserved
http://www.phoenixcontact.com