Terminal adapter - HC-B 24-A-UT-PER-M - 1648108

Please be informed that the data shown in this PDF Document is generated from our Online Catalog. Please find the complete data in the user's documentation. Our General Terms of Use for Downloads are valid
(http://phoenixcontact.com/download)

HEAVYCON terminal adapter male insert, B24 series, 24-pos., left protective conductor connection for the right side of the control cabinet, screw connection.

RoHS

Key Commercial Data

Packing unit	1 pc
GTIN	4 017918 969769
GTIN	4017918969769
Weight per Piece (excluding packing)	204.980 g
Custom tariff number	85366990
Country of origin	China

Technical data

Dimensions

Drill hole distance, horizontal	104 mm
Height	71.6 mm

Ambient conditions

Ambient temperature (operation)	-40 °C ... 125 °C

Electrical characteristics

Number of positions	24
Connection in acc. with standard	IEC / EN
Rated voltage (III/3)	500 V
Rated surge voltage	6 kV
Rated current	16 A

Terminal adapter - HC-B 24-A-UT-PER-M - 1648108

Technical data

Mechanical characteristics

Type	B24
Screw thread	M3
Connection method	Screw connection
Tightening torque	0.5 Nm ... 0.8 Nm
Stripping length of the individual wire	12 mm
Conductor cross section	0.5 mm² ... 2.5 mm²
Connection cross section AWG	20 ... 14

General

Note	For HEAVYCON-ADVANCE mounting flange and HEAVYCON panel mounting base of B24 type
	Connectors may be operated only when there is no load/voltage.
Contact material	Copper alloy
Contact surface material	Ag
Contact carrier material	PA
Standards/regulations	PA: Fire protection in rail vehicles - requirement sets R22 and R23 acc. to DIN EN 45545-2 (Risk level HL1 - HL2)
	PA: Fire protection in rail vehicles - requirement set R24 acc. to DIN EN 45545-2 (Risk level HL1 - HL3)
Degree of pollution	3
Overvoltage category	III
Flammability rating according to UL 94	V0
Connection in acc. with standard	IEC / EN
Assembly instructions	To ensure correct use, installation in housing with IP54 protection or better is required
Installation instructions	Connectors may only be actuated when there is no load/voltage.

Standards and Regulations

Connection in acc. with standard	CSA
Constructional and testing regulations	DIN EN 61984
	DIN EN 60664
	IEC 60352
Flammability rating according to UL 94	V0

Environmental Product Compliance

REACh SVHC	Lead 7439-92-1
China RoHS	Environmentally Friendly Use Period = 50 years
	For details about hazardous substances go to tab “Downloads”, Category “Manufacturer's declaration”

Drawings

Terminal adapter - HC-B 24-A-UT-PER-M - 1648108

Dimensional drawing

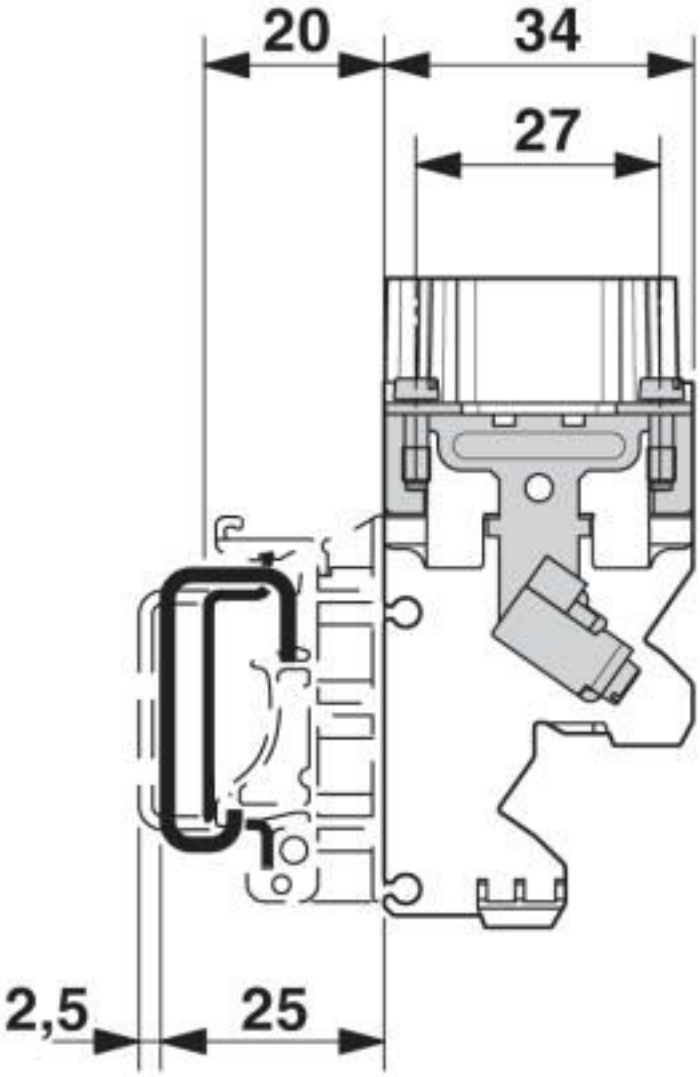

Side view

Terminal adapter - HC-B 24-A-UT-PER-M - 1648108

Dimensional drawing

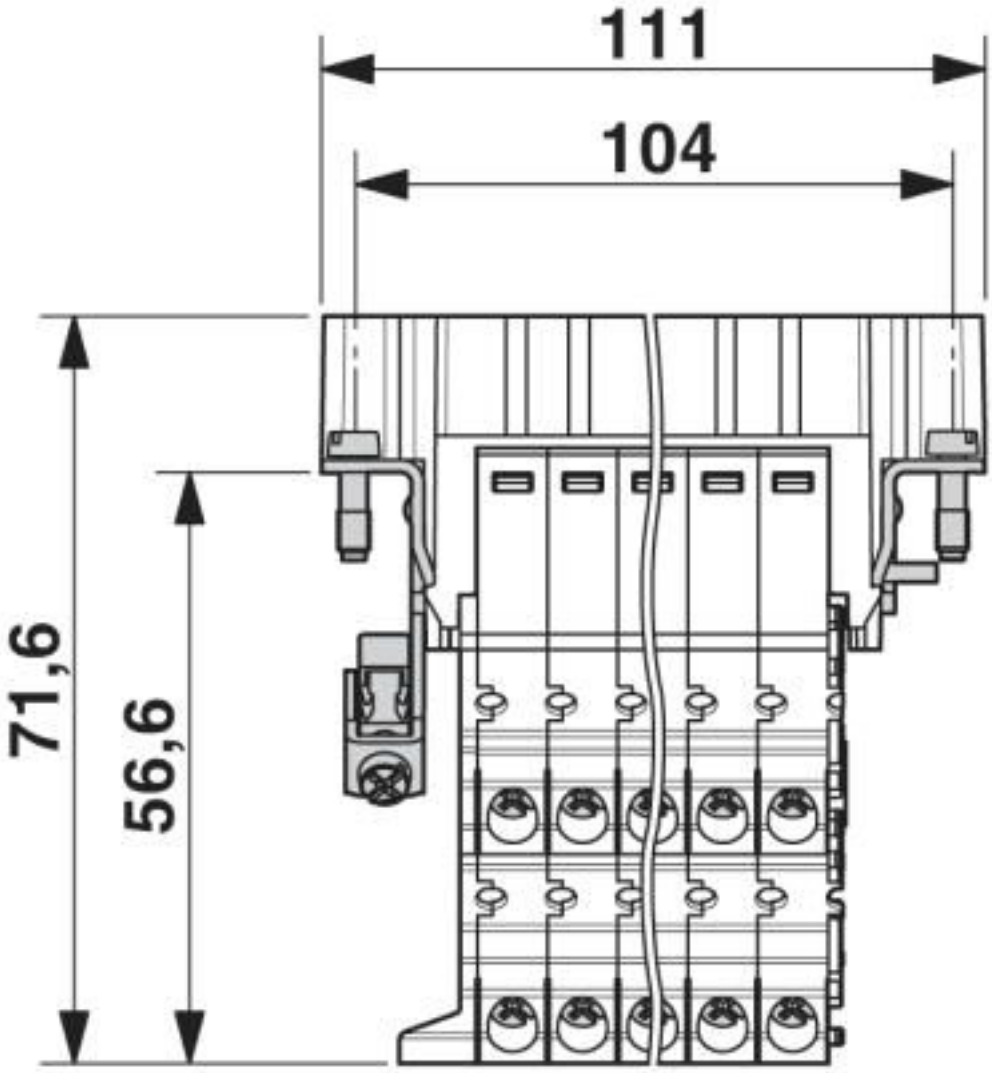

Connection side

Terminal adapter - HC-B 24-A-UT-PER-M - 1648108

Diagram

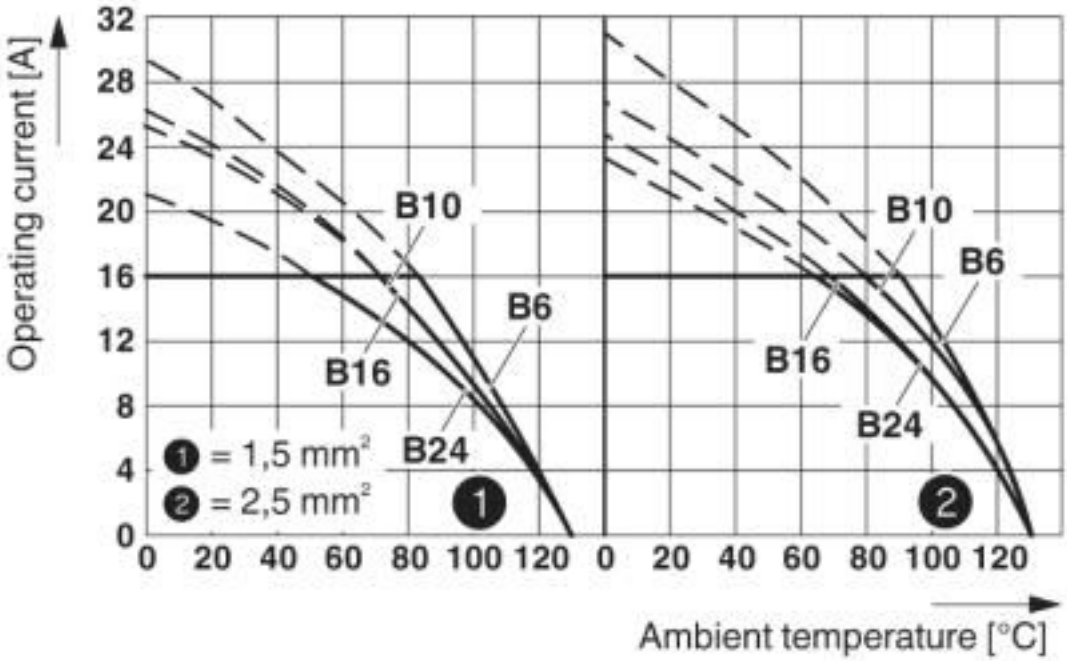

Derating diagram

Classifications

eCl@ss

eCl@ss 10.0.1	27440222
eCl@ss 4.0	27140800
eCl@ss 4.1	27140800
eCl@ss 5.0	27143400
eCl@ss 5.1	27261200
eCl@ss 6.0	27261200
eCl@ss 7.0	27440205
eCl@ss 8.0	27440205
eCl@ss 9.0	27440222

ETIM

ETIM 3.0	EC000438
ETIM 4.0	EC000438
ETIM 5.0	EC000438
ETIM 6.0	EC000438
ETIM 7.0	EC000438

Terminal adapter - HC-B 24-A-UT-PER-M - 1648108

Classifications

UNSPSC

UNSPSC 6.01	30211923
UNSPSC 7.0901	39121522
UNSPSC 11	39121522
UNSPSC 12.01	39121522
UNSPSC 13.2	39121421
UNSPSC 18.0	39121522
UNSPSC 19.0	39121522
UNSPSC 20.0	39121522
UNSPSC 21.0	39121522

Approvals

Approvals

Approvals

CSA / UL Recognized / cUL Recognized / EAC / EAC / cULus Recognized

Ex Approvals

Approval details

CSA	http://www.csagroup.org/services-industries/product-listing/	013631_6233_01

Nominal voltage UN	600 V
Nominal current IN	13 A
mm²/AWG/kcmil	22-14

UL Recognized	http://database.ul.com/cgi-bin/XYV/template/LISEXT/1FRAME/index.htm	FILE E 118976

Nominal voltage UN	600 V
Nominal current IN	13 A
mm²/AWG/kcmil	22-14

Terminal adapter - HC-B 24-A-UT-PER-M - 1648108

Approvals

cUL Recognized		http://database.ul.com/cgi-bin/XYV/template/LISEXT/1FRAME/index.htm	FILE E 118976

Nominal voltage UN	600 V
Nominal current IN	13 A
mm²/AWG/kcmil	22-14

EAC		RU C-DE.AI30.B.01102

EAC		RU C-DE.BL08.B.00511

cULus Recognized	

Accessories

Accessories

Coding element

Coding profile - CP-HC - 1686478

Coding profile, 4 coding profiles per strip, for insertion in coding keyways

Coding element - HC-CST - 1676857

Coding peg for coding up to 16 connectors

Terminal adapter - HC-B 24-A-UT-PER-M - 1648108

Accessories

Coding element - HC-CBU - 1676860

Coding socket for coding up to 16 connectors

Coding element - HC-CST-MOD - 1636127

Coding peg for coding up to 16 connectors, for HC Modular

Coding element - HC-CBU-MOD - 1636130

Coding socket for coding up to 16 connectors, for HC Modular

Coding bolt - HC-CB - 1772722

Coding pin, prevents mismating of up to six connectors with an identical number of positions

---

Mounting material

Foot element - HC-KA-FE - 1775240

Foot element, for mounting on DIN rail NS 32, DIN rail NS 35/7.5 or DIN rail NS 35/15, can be inserted between basic and side element

---

Terminal adapter - HC-B 24-A-UT-PER-M - 1648108

Accessories

Locking screw barrel - HC-VSH - 1660083

Locking screw barrel, for a firm connection of contact inserts and DIN-rail mountable terminal adapters

---

Screw - HC-B-PES - 1604997

PE screw, for contact inserts HC-B / HC-BB / HC-DD / HC-D40 / HC-D64

PE multiplier - HC-B-3PE - 1644326

PE multiplier, for three PE connections, for HC-B (besides HC-B..E..ZZ) / HC-BB / HC-DD / HC-D40 / HC-D64 contact inserts

---

Additional products

Contact insert - HC-B 24-I-UT-F - 1648306

HEAVYCON female insert, B24 series, 24-pos., screw connection

---

Phoenix Contact 2020 © - all rights reserved
http://www.phoenixcontact.com