Contact insert - HC-K12/ 2-EBUC - 1636347

Please be informed that the data shown in this PDF Document is generated from our Online Catalog. Please find the complete data in the user's documentation. Our General Terms of Use for Downloads are valid
(http://phoenixcontact.com/download)

HEAVYCON female insert, K12/2 series, for 12 power and 2 control contacts, crimp connection

Key Commercial Data

Packing unit	1 pc
GTIN	4 046356 011488
GTIN	4046356011488
Weight per Piece (excluding packing)	86.000 g
Custom tariff number	85366990
Country of origin	China

Technical data

General

Note	For HEAVYCON ADVANCE and HEAVYCON housing of type B16/B32, power contacts: CK 4,0-ED, control contacts: CK 1,6-ED (crimp contacts not supplied as standard)
	Connectors may be operated only when there is no load/voltage.
Connection method	Crimp connection (power contacts)
	Crimp connection (control contacts)
Torque	0.8 Nm ... 1.2 Nm (PE connection)
	0.5 Nm ... 0.8 Nm (Mounting screws for mounting in the HEAVYCON housing)
Degree of pollution	3
Overvoltage category	III
Number of positions	12+2+PE

Contact insert - HC-K12/ 2-EBUC - 1636347

Technical data

General

No. of power contacts	12
No. of control contacts	2
Insertion/withdrawal cycles	≥ 500
Size	B16
	B32
Contact numbering	1 - 12
Conductor cross section	1.5 mm² ... 6 mm² (power contacts)
	0.14 mm² ... 2.5 mm² (control contact)
Connection cross section AWG	16 ... 10 (power contacts)
	26 ... 14 (control contacts)
Stripping length of the individual wire	9 mm (1.5 mm² ... 2.5 mm²)
	8 mm (0.14 ... 1.5 mm²)
	9.5 mm (4 mm² ... 6 mm²)
	6 mm (2.5 mm²)
Assembly instructions	To ensure correct use, installation in housing with IP54 protection or better is required

Ambient conditions

Ambient temperature (operation)	-40 °C ... 125 °C

Material data

Contact material	Cu alloy
Material of contact surface, power contact	Ag
Material of contact surface, control contact	Ag (alternatively Au)
Contact carrier material	PC

Electrical characteristics

Rated voltage (III/3)	690 V (power contacts)
	250 V (control contacts)
Rated surge voltage	8 kV (power contacts)
	4 kV (control contacts)
Rated current	40 A (power contacts)
	10 A (control contacts)

Standards and Regulations

Connection in acc. with standard	CSA
Flammability rating according to UL 94	V0

Environmental Product Compliance

China RoHS	Environmentally Friendly Use Period = 50 years

Contact insert - HC-K12/ 2-EBUC - 1636347

Technical data

Environmental Product Compliance

	For details about hazardous substances go to tab “Downloads”, Category “Manufacturer's declaration”

Drawings

Schematic diagram

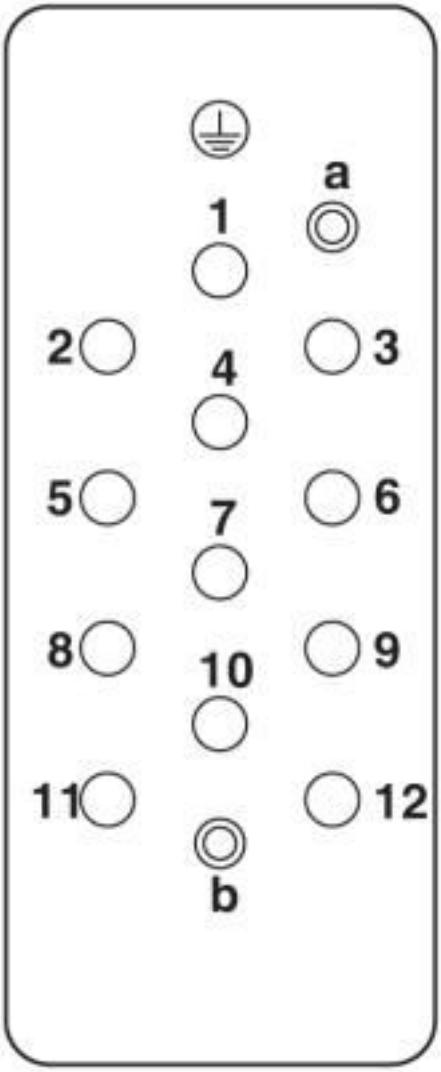

Connector pin assignment, connection side

Contact insert - HC-K12/ 2-EBUC - 1636347

Diagram

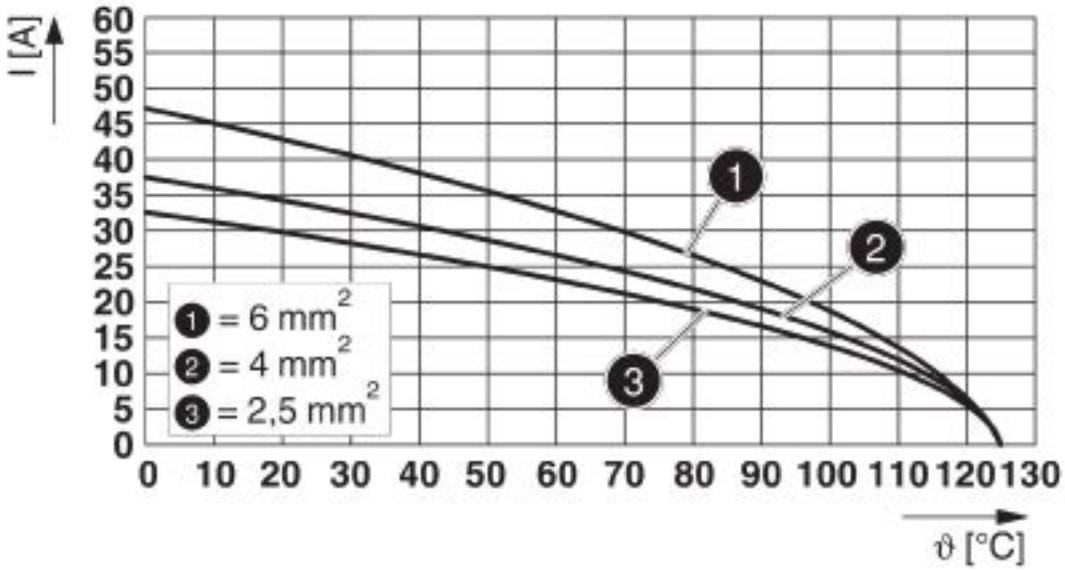

Derating diagram

Dimensional drawing

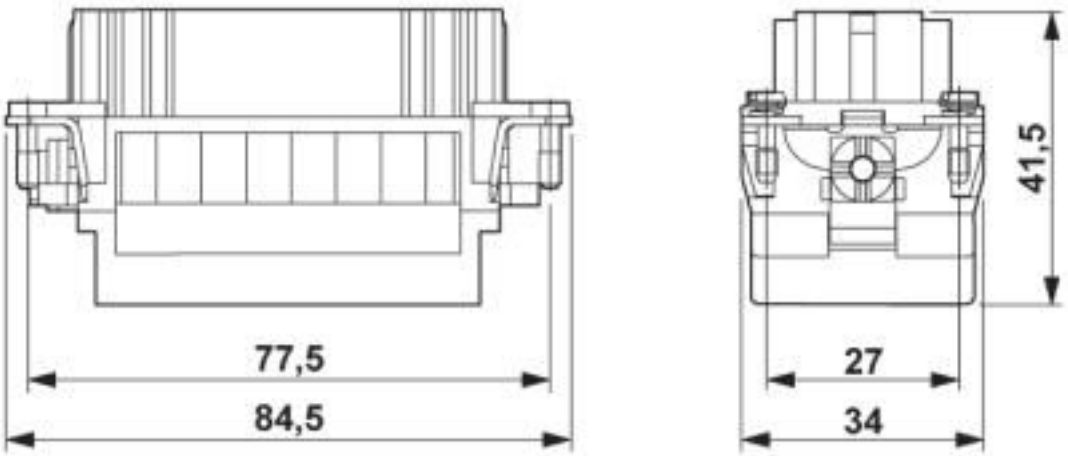

Dimensional drawing

Contact insert - HC-K12/ 2-EBUC - 1636347

Dimensional drawing

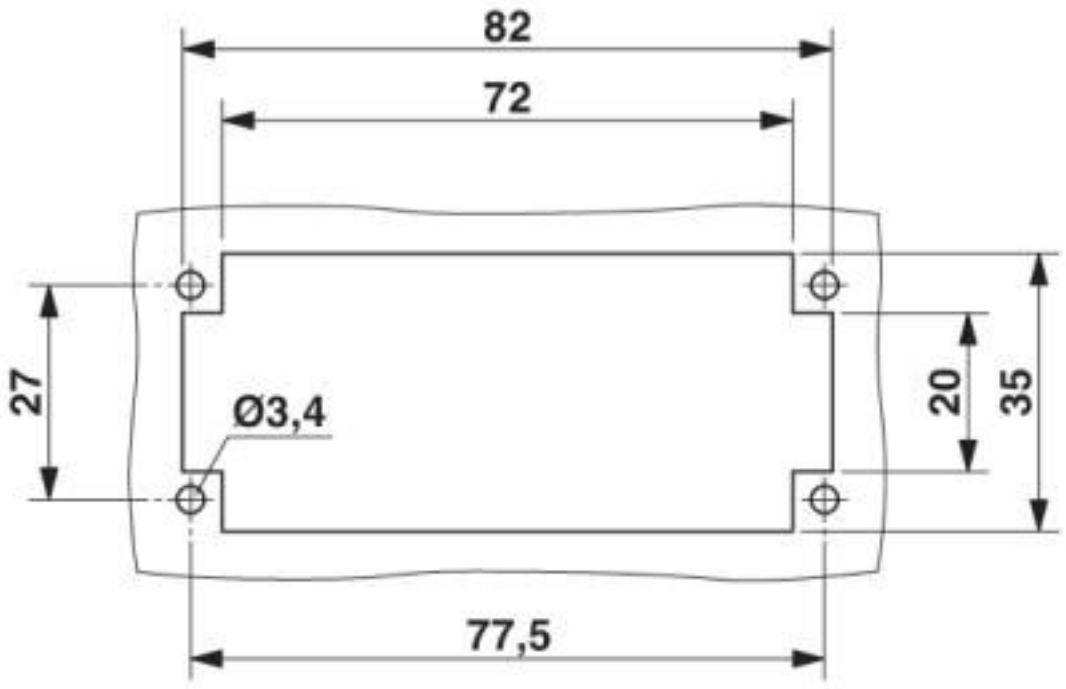

Mounting cutout when used without housing

Classifications

eCl@ss

eCl@ss 10.0.1	27440205
eCl@ss 4.0	27140800
eCl@ss 4.1	27140800
eCl@ss 5.0	27143400
eCl@ss 5.1	27261200
eCl@ss 6.0	27261200
eCl@ss 7.0	27440205
eCl@ss 8.0	27440205
eCl@ss 9.0	27440205

ETIM

ETIM 2.0	EC000438
ETIM 3.0	EC000438
ETIM 4.0	EC000438
ETIM 5.0	EC000438

Contact insert - HC-K12/ 2-EBUC - 1636347

Classifications

ETIM

ETIM 6.0	EC000438
ETIM 7.0	EC000438

UNSPSC

UNSPSC 6.01	30211923
UNSPSC 7.0901	39121522
UNSPSC 11	39121522
UNSPSC 12.01	39121522
UNSPSC 13.2	39121522
UNSPSC 18.0	39121522
UNSPSC 19.0	39121522
UNSPSC 20.0	39121522
UNSPSC 21.0	39121522

Approvals

Approvals

Approvals

EAC / EAC / UL Recognized

Ex Approvals

Approval details

EAC	EAC	RU C-DE.AI30.B.01102

EAC	EAC	RU C-DE.BL08.B.00511

Contact insert - HC-K12/ 2-EBUC - 1636347

Approvals

UL Recognized		http://database.ul.com/cgi-bin/XYV/template/LISEXT/1FRAME/index.htm	E118976

Nominal voltage UN	600 V
Nominal current IN	10 A
mm²/AWG/kcmil	14

Accessories

Accessories

Crimp contact

Crimp contact - CK1,6-ED-0,37BU AG - 1663394

Turned 1.6 crimp contact, individual female contact, core diameter 0.14 to 0.37 mm², silver-plated

Crimp contact - CK1,6-ED-0,50BU AG - 1663404

Turned 1.6 crimp contact, individual female contact, core diameter 0.5 mm², silver-plated

Crimp contact - CK1,6-ED-0,75BU AG - 1663417

Turned 1.6 crimp contact, individual female contact, core diameter 0.75 mm², silver-plated

Contact insert - HC-K12/ 2-EBUC - 1636347

Accessories

Crimp contact - CK1,6-ED-1,00BU AG - 1663420

Turned 1.6 crimp contact, individual female contact, core diameter 0.75 to 1.00 mm², silver-plated

---

Crimp contact - CK1,6-ED-1,50BU AG - 1663433

Turned 1.6 crimp contact, individual female contact, core diameter 1.5 mm², silver-plated

---

Crimp contact - CK1,6-ED-2,50BU AG - 1663446

Turned 1.6 crimp contact, individual female contact, core diameter 2.5 mm², silver-plated

---

Crimp contact - CK1,6-ED-0,37BU AU - 1674969

Turned 1.6 crimp contact, individual female contact, core diameter 0.14 to 0.37 mm², gold-plated

---

Crimp contact - CK1,6-ED-0,50BU AU - 1674480

Turned 1.6 crimp contact, individual female contact, core diameter 0.5 mm², gold-plated

---

Contact insert - HC-K12/ 2-EBUC - 1636347

Accessories

Crimp contact - CK1,6-ED-0,75BU AU - 1672440

Turned 1.6 crimp contact, individual female contact, core diameter 0.75 mm², gold-plated

---

Crimp contact - CK1,6-ED-1,00BU AU - 1674943

Turned 1.6 crimp contact, individual female contact, core diameter 0.75 to 1.00 mm², gold-plated

---

Crimp contact - CK1,6-ED-1,50BU AU - 1674930

Turned 1.6 crimp contact, individual female contact, core diameter 1.5 mm², gold-plated

---

Crimp contact - CK1,6-ED-2,50BU AU - 1674985

Turned 1.6 crimp contact, individual female contact, core diameter 2.5 mm², gold-plated

---

Crimp contact - CK4,0-ED-1,50BU AG - 1663271

Turned 4.0 crimp contact, individual female contact, core diameter 1.50 mm², silver-plated

---

Contact insert - HC-K12/ 2-EBUC - 1636347

Accessories

Crimp contact - CK4,0-ED-2,50BU AG - 1663284

Turned 4.0 crimp contact, individual female contact, core diameter 2.50 mm², silver-plated

---

Crimp contact - CK4,0-ED-4,00BU AG - 1663297

Turned 4.0 crimp contact, individual female contact, core diameter 4.00 mm², silver-plated

---

Crimp contact - CK4,0-ED-6,00BU AG - 1663307

Turned 4.0 crimp contact, individual female contact, core diameter 6.00 mm², silver-plated

---

Crimp contact - CK4,0-ED-10,00BU AG - 1586183

Turned 4.0 crimp contact, single socket contact, 10 mm² conductor cross section, silver-plated

---

Fiber optics contact

Female contact - CK1,6-ED-BU-POF - 1885004

POF fiber optic socket contact, turned, for contact carriers (HC-DD...I-CT.../ HC-M-12-CT-F.../ HC-M-17-CT-F...) of CK1,6-ED... contacts

---

Contact insert - HC-K12/ 2-EBUC - 1636347

Accessories

Additional products

Contact insert - HC-K12/ 2-ESTC - 1636334

HEAVYCON male insert, K12/2 series, for 12 power and 2 control contacts, crimp connection

Phoenix Contact 2020 © - all rights reserved
http://www.phoenixcontact.com