Panel mounting frames - CUC-V14-F1ZNI-EM/R4B8 - 1413962

Please be informed that the data shown in this PDF Document is generated from our Online Catalog. Please find the complete data in the user's documentation. Our General Terms of Use for Downloads are valid (http://phoenixcontact.com/download)

RJ45 panel mounting frame, IP67, for push-pull interlocking, metal, for rectangular mounting cutout, with seal and mounting screws, incl. RJ45 coupling module

Key Commercial Data

Packing unit	1 pc
GTIN	4 055626 082141
GTIN	4055626082141
Weight per Piece (excluding packing)	40.000 g
Custom tariff number	85389099
Country of origin	Taiwan

Technical data

Mechanical characteristics

Number of slots	2
Degree of pollution	2
Locking type	Push Pull
Weight	42.8 g
Flammability rating according to UL 94	V0

Ambient conditions

Ambient temperature (operation)	-10 °C ... 60 °C
Ambient temperature (assembly)	-10 °C ... 60 °C
Ambient temperature (storage/transport)	-40 °C ... 70 °C

Material data

Panel mounting frames - CUC-V14-F1ZNI-EM/R4B8 - 1413962

Technical data

Material data

Seal material	NBR
Housing material	Zinc die-cast
Housing surface material	Nickel-plated
Seal material	NBR
Width	22.2 mm
Height	42 mm
Length	46.2 mm
Housing surface material 1	Cu/Ni

Electrical characteristics

Number of positions	8
GRP transmission properties	$CAT6_A$
Transmission speed	1 Gbps
Frequency range	250 MHz
Degree of pollution	2
Rated voltage (III/3)	72 V (DC)
Insulation resistance	> 500 MΩ

Standards and Regulations

Flammability rating according to UL 94	V0

Environmental Product Compliance

China RoHS	Environmentally friendly use period: unlimited = EFUP-e
	No hazardous substances above threshold values

Drawings

Panel mounting frames - CUC-V14-F1ZNI-EM/R4B8 - 1413962

Drilling diagram

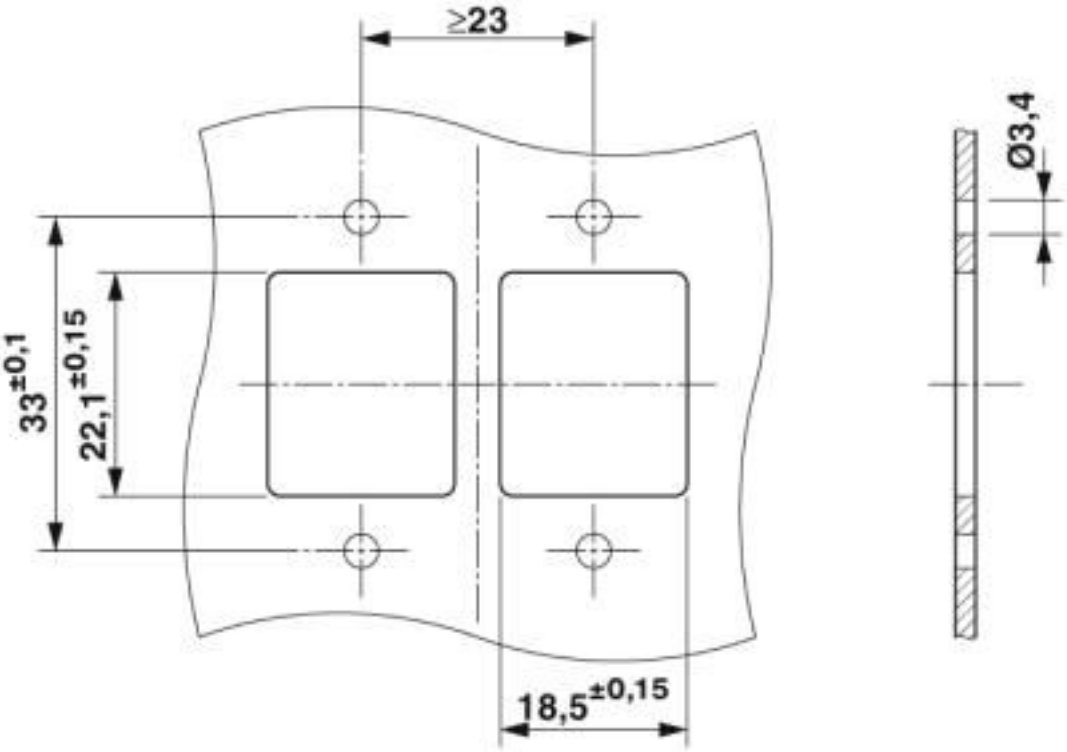

Panel mounting frames - CUC-V14-F1ZNI-EM/R4B8 - 1413962

Dimensional drawing

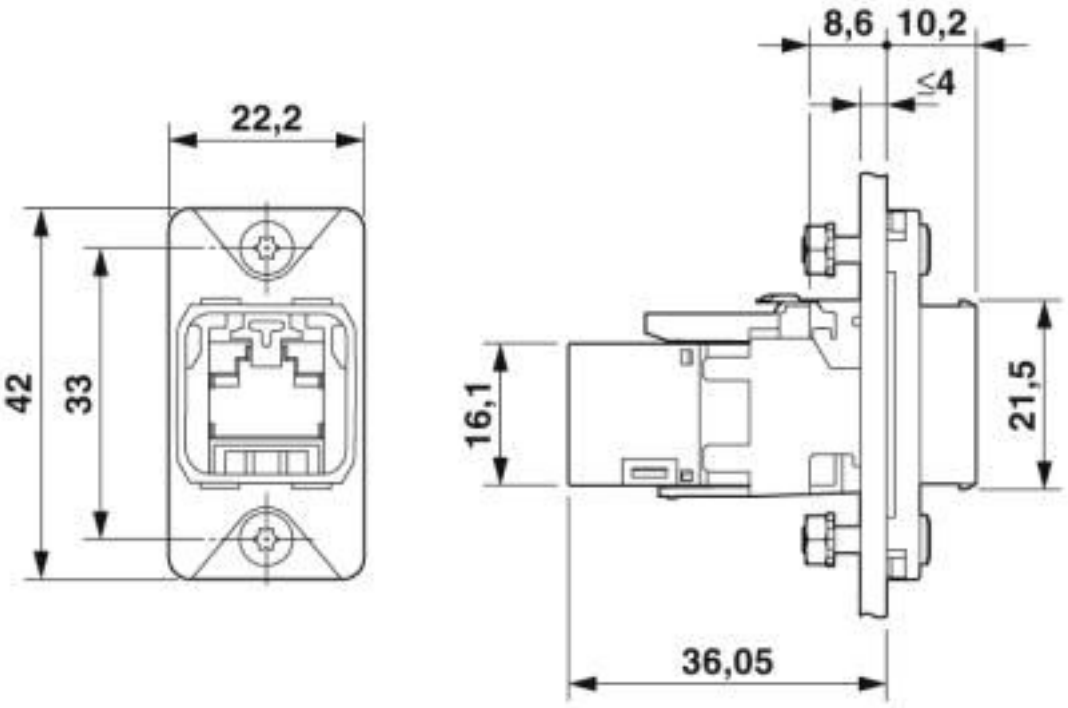

Classifications

eCl@ss

eCl@ss 10.0.1	27440210
eCl@ss 4.0	272607xx
eCl@ss 4.1	27260701
eCl@ss 5.0	27260701
eCl@ss 5.1	27260701
eCl@ss 6.0	27261200
eCl@ss 7.0	27440210
eCl@ss 8.0	27440210
eCl@ss 9.0	27440210

ETIM

ETIM 3.0	EC002310
ETIM 4.0	EC002310
ETIM 5.0	EC002310
ETIM 6.0	EC002310
ETIM 7.0	EC002310

Panel mounting frames - CUC-V14-F1ZNI-EM/R4B8 - 1413962

Classifications

UNSPSC

UNSPSC 6.01	31261501
UNSPSC 7.0901	31261501
UNSPSC 11	31261501
UNSPSC 12.01	31261501
UNSPSC 13.2	31261501
UNSPSC 18.0	39121421
UNSPSC 19.0	39121421
UNSPSC 20.0	39121421
UNSPSC 21.0	39121421

Approvals

Approvals

Approvals

EAC / cULus Recognized

Ex Approvals

Approval details

EAC		B.01687

cULus Recognized		http://database.ul.com/cgi-bin/XYV/template/LISEXT/1FRAME/index.htm	E335024-20160727

Nominal voltage UN	56.5 V
Nominal current IN	0.175 A

Accessories

Accessories

Data plug

Panel mounting frames - CUC-V14-F1ZNI-EM/R4B8 - 1413962

Accessories

RJ45 connector - CUC-V14-C1ZNI-S/R4P8 - 1422664

Push-pull connector (version 14), die-cast zinc, with RJ45 connector insert, 8-pos., with IDC fast connection technology, for 1 and 7-wire cores, 23 ... 22 AWG, for cable diameter of 5.5 mm ... 10 mm

RJ45 connector - CUC-V14-C1ZNI-B/R4P8 - 1422665

Push-pull connector (version 14), die-cast zinc, with RJ45 connector insert, 8-pos., with IDC fast connection technology, for 1 and 7-wire cores, 23 ... 22 AWG, for cable diameter of 5.5 mm ... 10 mm

RJ45 connector - CUC-V14-C1ZNI-T/R4P8 - 1422667

Push-pull connector (version 14), die-cast zinc, with RJ45 connector insert, 8-pos., with IDC fast connection technology, for 1 and 7-wire cores, 23 ... 22 AWG, for cable diameter of 5.5 mm ... 10 mm

Panel mounting frame

Screw set - CUC-V14-A-SCREW-M3:20 - 1413987

Screw set, M3 for panel mounting frames

Protective covers - CUC-V14-A1PBK-PC - 1413970

Protective covers, degree of protection: IP65/IP67

Panel mounting frames - CUC-V14-F1ZNI-EM/R4B8 - 1413962

Accessories

Protective covers - CUC-V14-A1RBK-PC - 1413985

Protective covers, degree of protection: IP65/IP67

Panel mounting frames - CUC-V14-A1ZNI-R45 - 1413988

45° adapter for panel mounting frames

Panel mounting frames - CUC-V14-A1ZNI-S180 - 1413989

Spacer for panel mounting frames

Strain relief - CUC-V14-A3ST-SR - 1413990

Strain relief, degree of protection: IP65/IP67, material: Stainless steel

Panel mounting frames - CUC-V14-A1PBK-BA:50 - 1413979

Holder for marking element

Phoenix Contact 2020 © - all rights reserved
http://www.phoenixcontact.com