Flush-type connector - SACC-CI-M12FST-4P SMD R32 - 1411981

Please be informed that the data shown in this PDF Document is generated from our Online Catalog. Please find the complete data in the user's documentation. Our General Terms of Use for Downloads are valid (http://phoenixcontact.com/download)

Flush-type connector, Power, 4-position, Socket, straight, M12, T power, PCB mounting, SMD

Your advantages

- For compact devices: transmit high power in a confined space
- Reduced mounting costs thanks to two-piece device connector
- Packaging available for automated pick and place assembly
- All common pin assignments and codings available
- Easy device integration thanks to mechanical port screw connections with threaded attachment, press-in contour or direct integration in the front plate

RoHS

Key Commercial Data

Packing unit	1 pc
Minimum order quantity	100 pc
GTIN	4 046356 991728
GTIN	4046356991728
Weight per Piece (excluding packing)	11.000 g
Custom tariff number	85366990
Country of origin	Germany

Technical data

Ambient conditions

Ambient temperature (operation)	-25 °C ... 105 °C (Plug / socket)
	-55 °C ... 105 °C (without mechanical actuation)
Degree of protection	IP67 (correctly plugged in and locked)

Flush-type connector - SACC-CI-M12FST-4P SMD R32 - 1411981

Technical data

General

Note	The electrical and mechanical data specified assume that the connector pair is correctly locked and mounted. If the connector is unlocked and if there is a danger of contamination, the connector must be sealed using a protective cap > IP54. Influences arising from litz wires, cables or PCB assembly must also be taken into consideration.
Rated current at 40°C	12 A
Rated voltage	63 V
Rated surge voltage	1.5 kV
Number of positions	4
Insulation resistance	≥ 100 MΩ
Coding	T power
Standards/regulations	M12 connector IEC 61076-2-111 In line with
Signal type/category	Power
Overvoltage category	III
Degree of pollution	3
Connection method	SMD
Insertion/withdrawal cycles	> 100
Mounting type	PCB mounting
Type of packaging	Belt

Material

Flammability rating according to UL 94	V0
Contact material	CuZn
Contact surface material	Au
Contact carrier material	PA

Cable

Standards/specifications	M12 connector IEC 61076-2-111 In line with

Standards and Regulations

Standards/specifications	M12 connector IEC 61076-2-111 In line with
Flammability rating according to UL 94	V0

Environmental Product Compliance

REACh SVHC	Lead 7439-92-1
China RoHS	Environmentally Friendly Use Period = 50 years
	For details about hazardous substances go to tab “Downloads”, Category “Manufacturer's declaration”

Drawings

Flush-type connector - SACC-CI-M12FST-4P SMD R32 - 1411981

Dimensional drawing

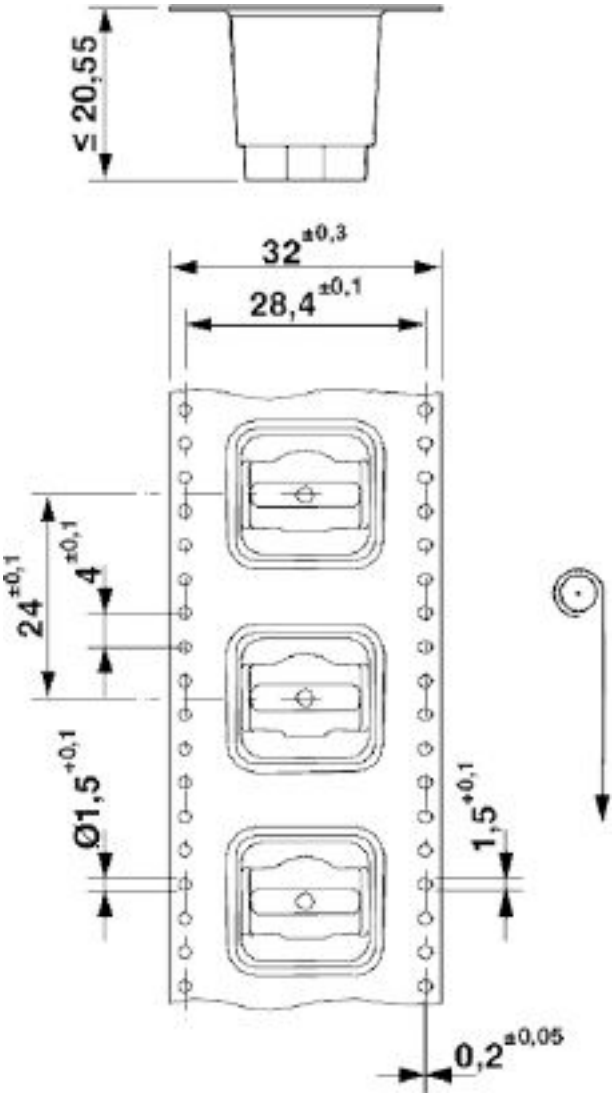

SMD tape-on-reel packing

Flush-type connector - SACC-CI-M12FST-4P SMD R32 - 1411981

Dimensional drawing

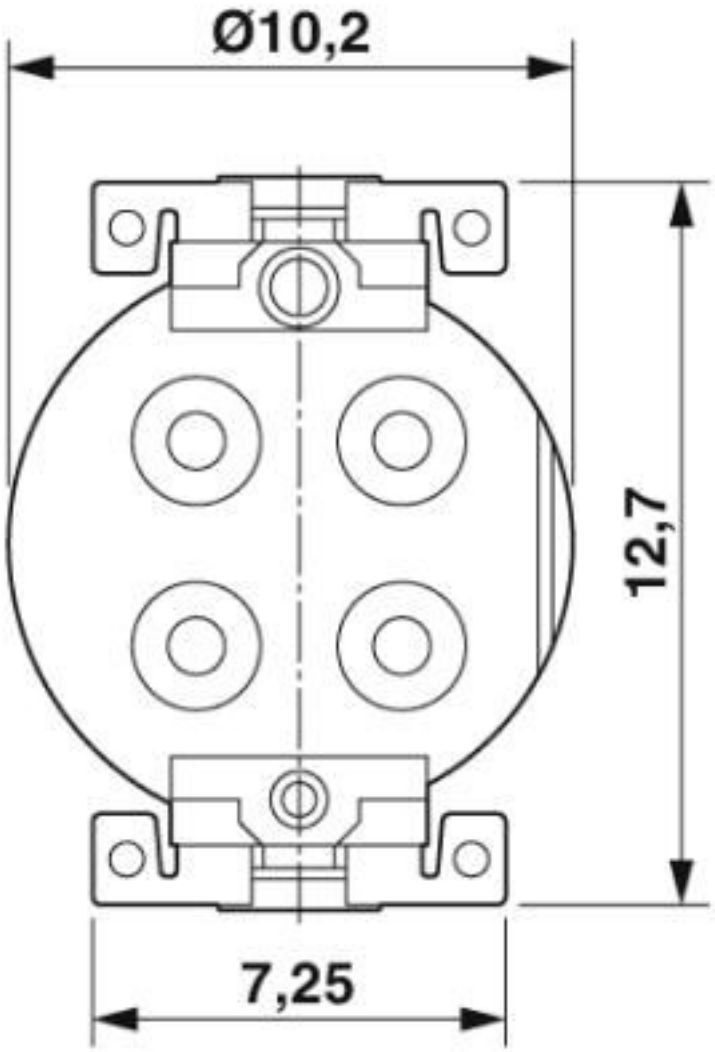

View of solder side

Flush-type connector - SACC-CI-M12FST-4P SMD R32 - 1411981

Drilling diagram

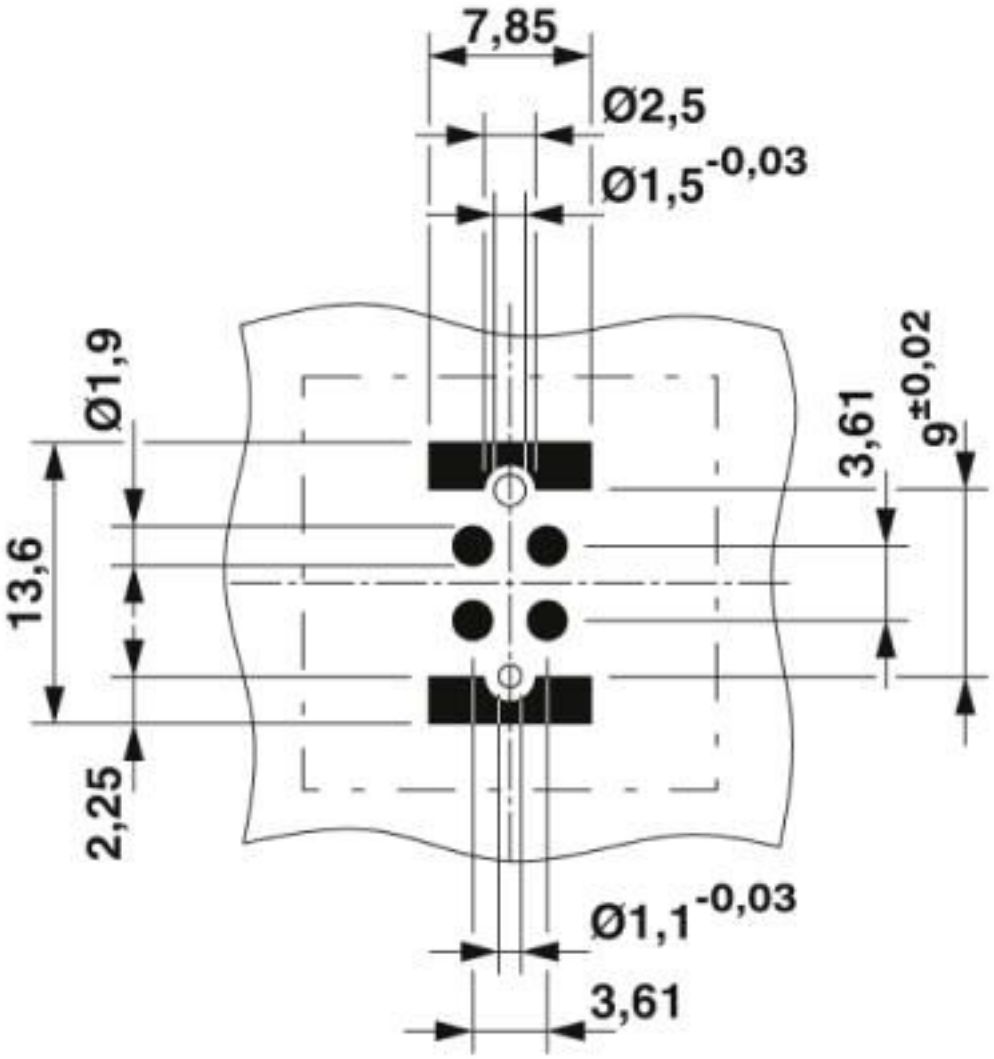

Soldering pad geometry

Flush-type connector - SACC-CI-M12FST-4P SMD R32 - 1411981

Dimensional drawing

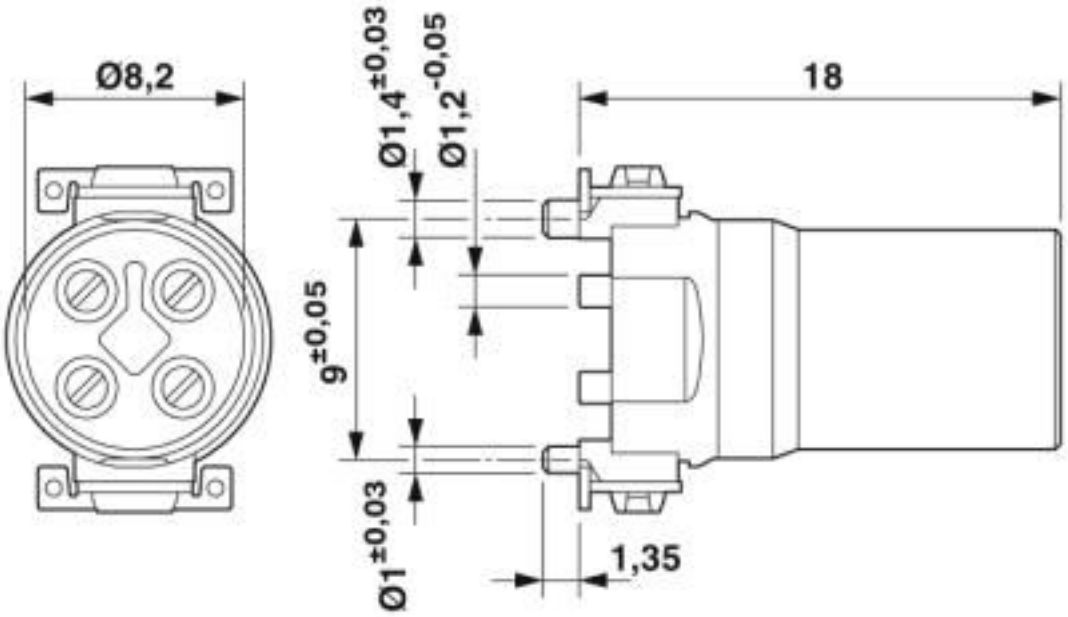

M12 female connector contact carrier

Flush-type connector - SACC-CI-M12FST-4P SMD R32 - 1411981

Schematic diagram

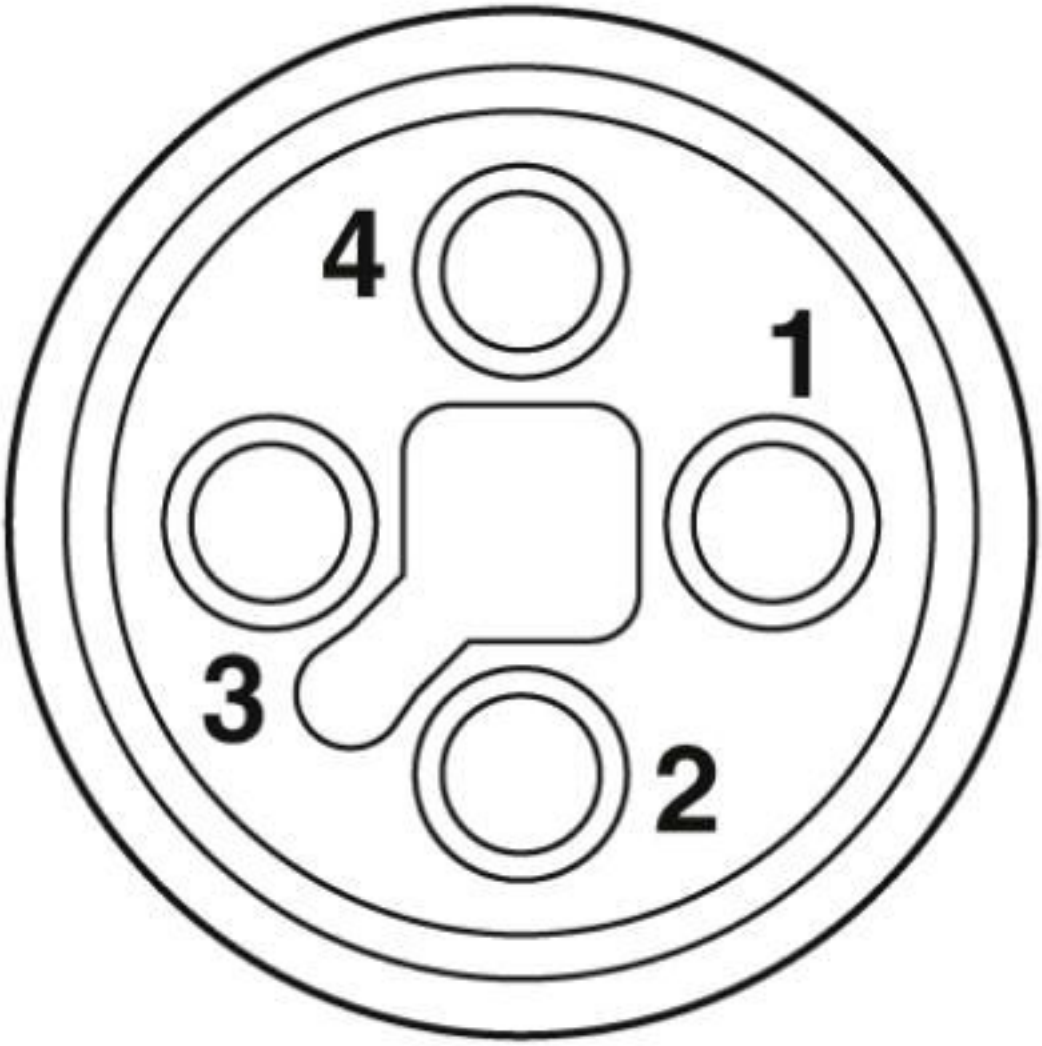

Pin assignment of M12 socket, 4-pos., T-coded, socket side view

Classifications

eCl@ss

eCl@ss 10.0.1	27440102
eCl@ss 4.0	27140800
eCl@ss 4.1	27140800
eCl@ss 5.0	27143400
eCl@ss 5.1	27143400

Flush-type connector - SACC-CI-M12FST-4P SMD R32 - 1411981

Classifications

eCl@ss

eCl@ss 6.0	27279200
eCl@ss 7.0	27440103
eCl@ss 8.0	27440103
eCl@ss 9.0	27440102

ETIM

ETIM 5.0	EC002061
ETIM 6.0	EC002061

UNSPSC

UNSPSC 13.2	39121413
UNSPSC 18.0	39121413
UNSPSC 19.0	39121413
UNSPSC 20.0	39121413
UNSPSC 21.0	39121413

Approvals

Approvals

Approvals

EAC / UL Recognized / cUL Recognized / cULus Recognized

Ex Approvals

Approval details

EAC		B.01687

UL Recognized		http://database.ul.com/cgi-bin/XYV/template/LISEXT/1FRAME/index.htm	E468743-20190917

Nominal voltage UN	63 V
Nominal current IN	10 A

Flush-type connector - SACC-CI-M12FST-4P SMD R32 - 1411981

Approvals

mm²/AWG/kcmil	16

cUL Recognized		http://database.ul.com/cgi-bin/XYV/template/LISEXT/1FRAME/index.htm	E468743-20190917

Nominal voltage UN	63 V
Nominal current IN	8 A
mm²/AWG/kcmil	16

cULus Recognized

Accessories

Accessories

Contact insert

Sample set - SACC-CI-M12FST-4P SMD-SP - 1418631

Sample set, 4-position, Socket, straight, M12, T power, PCB mounting, SMD

Panel mounting base

Housing screw connection - SACC-BP-F-M12/M15-6-SMD - 1414021

Housing screw connection, Socket, M12, Rear mounting, M15 x 1

Flush-type connector - SACC-CI-M12FST-4P SMD R32 - 1411981

Accessories

Housing screw connection - SACC-BP-F-M12/M15-6-SMD SCO - 1414023

Housing screw connection, Socket, M12-SPEEDCON, Rear mounting, M15 x 1

Housing screw connection - SACC-FP-F-M12/M14 SMD - 1412079

M12 female connector, front mounting SMD with M14 screw fastening

---

Housing screw connection - SACC-FP-F-M12/PRESS SMD - 1412081

Housing screw connection, socket, for the two-part M12 SMD connector, for press-in mounting.

Housing screw connection - SACC-BP-F-FIX/NUT-BK-SMD - 1419568

Fixing sleeve for M12 housing screw connection with tolerance-compensating function, for SMD-solderable M12 socket contact inserts.

Housing screw connection - SACC-BP-F-FIX/NUT-CY-SMD - 1419565

Fixing sleeve for M12 housing screw connection with tolerance-compensating function, for SMD-solderable M12 socket contact inserts.

Flush-type connector - SACC-CI-M12FST-4P SMD R32 - 1411981

Accessories

Housing screw connection - SACC-BP-F-FIX/NUT-GN-SMD - 1419566

Fixing sleeve for M12 housing screw connection with tolerance-compensating function, for SMD-solderable M12 socket contact inserts.

Housing screw connection - SACC-BP-F-FIX/NUT-VT-SMD - 1419567

Fixing sleeve for M12 housing screw connection with tolerance-compensating function, for SMD-solderable M12 socket contact inserts.

Housing screw connection - SACC-BP-F-M12/SMD-0,9/1,6-9TIP - 1419569

M12 threaded sleeve with tolerance-compensating function, for straight, SMD-solderable M12 socket contact inserts. Suitable for 0.9 mm ... 1.6 mm thick front plates.

Housing screw connection - SACC-BP-F-M12/SMD-1,6/2,3-9TIP - 1419570

M12 threaded sleeve with tolerance-compensating function, for straight, SMD-solderable M12 socket contact inserts. Suitable for 1.6 mm ... 2.3 mm thick front plates.

Housing screw connection - SACC-BP-F-M12/SMD-2,3/3,0-9TIP - 1419571

M12 threaded sleeve with tolerance-compensating function, for straight, SMD-solderable M12 socket contact inserts. Suitable for 2.3 mm ... 3.0 mm thick front plates.

Phoenix Contact 2020 © - all rights reserved
http://www.phoenixcontact.com